STATE	PROJECT NO.
MISS.	

DIMENSIONS AND REINFORCING FOR FLARED HEADWALL FOR SINGLE LINE PIPE CULVERT

Dimensions and reinforcing steel (A–J5)

EQUAL PIPE SIZE	G	X	Y	A NO	A LGTH	B NO	B LGTH	C NO	C LGTH	D NO	D LGTH	J1 NO	J1 LGTH	J2 NO	J2 LGTH	J3 NO	J3 LGTH	J4 NO	J4 LGTH	J5 NO	J5 LGTH
18	3-9¾	6-3⅛	2-11¼	4	7-2	5	6-1	2	2-6	2	2-3	1	3-10	1	4-7	1	5-4	1	6-0	1	6-9
24	4-5⅜	8-1⅝	3-6⅞	4	8-4	6	7-10	2	3-1	2	2-6	1	4-6	1	5-3	1	6-0	1	6-8	1	7-5
30	5-1⅜	9-3⅞	4-2⅞	4	9-4	6	8-6	2	3-5	2	2-9	1	5-2	1	5-11	1	6-8	1	7-4	1	8-1
36	5-10⅝	10-10¼	5-0⅛	4	10-6	7	9-7	2	3-10	2	3-0	1	5-11	1	6-8	1	7-5	1	8-1	1	8-10
42	6-6⅝	12-4⅜	5-8⅛	4	11-8	8	10-9	2	4-4	2	3-5	1	6-7	1	7-4	1	8-1	1	8-9	1	9-6
48	7-3⅛	14-0⅛	6-4⅝	4	12-11	8	12-1	2	4-10	2	3-10	1	7-4	1	8-1	1	8-10	1	9-6	1	10-3
54	7-11	15-5½	7-0½	4	14-0	9	13-2	2	5-3	2	4-3	1	7-11	1	8-8	1	9-5	1	10-1	1	10-10
60	8-7¾	17-1⅞	7-9¼	4	15-3	10	14-6	2	5-9	2	4-8	1	8-8	1	9-5	1	10-2	1	10-10	1	11-7
72	10-0¼	20-2¾	9-1¾	4	17-6	11	16-10	2	6-8	2	5-3	1	10-1	1	10-10	1	11-7	1	12-3	1	13-0

Reinforcing steel (J6–J15)

EQUAL PIPE SIZE	J6 NO	J6 LGTH	J7 NO	J7 LGTH	J8 NO	J8 LGTH	J9 NO	J9 LGTH	J10 NO	J10 LGTH	J11 NO	J11 LGTH	J12 NO	J12 LGTH	J13 NO	J13 LGTH	J14 NO	J14 LGTH	J15 NO	J15 LGTH
18																				
24	1	8-2																		
30	1	8-10	1	9-7																
36	1	9-7	1	10-4	1	11-0														
42	1	10-3	1	11-0	1	11-8	1	12-5												
48	1	11-0	1	11-9	1	12-5	1	13-2	1	13-11										
54	1	11-7	1	12-4	1	13-0	1	13-9	1	14-6	1	15-3	1	16-0						
60	1	12-4	1	13-1	1	13-9	1	14-6	1	15-3	1	16-0	1	16-8	1	17-5				
72	1	13-9	1	14-6	1	15-2	1	15-11	1	16-8	1	17-5	1	18-1	1	18-10	1	19-7	1	20-4

Reinforcing steel (U–W9)

EQUAL PIPE SIZE	U NO	U LGTH	W1 NO	W1 LGTH	W2 NO	W2 LGTH	W3 NO	W3 LGTH	W4 NO	W4 LGTH	W5 NO	W5 LGTH	W6 NO	W6 LGTH	W7 NO	W7 LGTH	W8 NO	W8 LGTH	W9 NO	W9 LGTH
18	4	4-5	4	2-9	4	2-2	4	1-9												
24	4	6-3	4	3-9	4	3-0	4	2-4	4	1-10										
30	4	6-11	4	4-5	4	3-8	4	2-10	4	2-2	2	1-11								
36	4	8-1	4	5-1	4	4-5	4	3-7	4	2-9	4	2-4								
42	4	9-4	4	5-11	4	5-2	4	4-4	4	3-7	4	2-10	2	2-8						
48	4	10-9	4	6-9	4	5-11	4	5-2	4	4-4	4	3-7	4	2-10						
54	4	11-10	4	7-7	4	6-9	4	5-11	4	5-1	4	4-3	4	3-6	4	3-3				
60	4	13-3	4	8-6	4	7-8	4	6-10	4	6-1	4	5-3	4	4-4	4	3-7	2	3-6		
72	4	15-9	4	10-1	4	9-4	4	8-6	4	7-8	4	6-10	4	6-0	4	5-3	4	4-5	2	4-2

Reinforcing steel (Y1–Y6) and pay quantities for one headwall

EQUAL PIPE SIZE	Y1 NO	Y1 LGTH	Y2 NO	Y2 LGTH	Y3 NO	Y3 LGTH	Y4 NO	Y4 LGTH	Y5 NO	Y5 LGTH	Y6 NO	Y6 LGTH	CONCRETE (CU. YDS.)	STEEL (LBS.)
18	2	3-3	2	5-2									0.90	104
24	2	3-3	2	6-11									1.40	146
30	2	3-3	2	7-5	2	7-8							1.73	182
36	2	3-3	2	7-5	2	8-9							2.22	223
42	2	3-3	2	7-5	2	10-1							2.79	271
48	2	3-3	2	7-5	2	11-5	2	11-5					3.49	331
54	2	3-3	2	7-5	2	11-8	2	12-7					4.16	401
60	2	3-3	2	7-5	2	11-8	2	14-0	2	14-0			5.03	486
72	2	3-3	2	7-5	2	11-8	2	15-11	2	16-6	2	16-6	6.80	637

DIMENSIONS AND REINFORCING FOR FLARED HEADWALL FOR DOUBLE LINE PIPE CULVERT

Dimensions and reinforcing steel (A–J5)

EQUAL PIPE SIZE	G	X	Y	Z	A NO	A LGTH	B NO	B LGTH	C NO	C LGTH	D NO	D LGTH	J1 NO	J1 LGTH	J2 NO	J2 LGTH	J3 NO	J3 LGTH	J4 NO	J4 LGTH	J5 NO	J5 LGTH
18	7-1	9-6⅜	6-2½	1-0	4	10-5	8	6-1	3	2-6	4	2-3	1	7-1	1	7-10	1	8-7	1	9-3	1	10-0
24	8-4¼	12-0½	7-5¾	1-0	4	12-3	9	7-10	3	3-1	4	2-6	1	8-5	1	9-2	1	9-11	1	10-7	1	11-4
30	9-8¼	13-10¾	8-9¾	1-0	4	13-11	11	8-6	3	3-5	4	2-9	1	9-9	1	10-6	1	11-3	1	11-11	1	12-8
36	11-5¾	16-5⅜	10-7¼	1-3	4	16-2	13	9-7	4	3-10	4	3-0	1	11-6	1	12-3	1	13-0	1	13-8	1	14-5
42	12-9¾	18-7½	11-11¼	1-3	4	18-0	14	10-9	4	4-4	4	3-5	1	12-10	1	13-7	1	14-4	1	15-0	1	15-9
48	14-5¾	21-2¾	13-7¼	1-6	4	20-2	16	12-1	4	4-10	4	3-10	1	14-6	1	15-3	1	16-0	1	16-8	1	17-5
54	16-0½	23-7	15-2	1-9	4	22-2	17	13-2	4	5-3	4	4-3	1	16-1	1	16-10	1	17-7	1	18-3	1	19-0
60	17-9	26-3⅛	16-10½	2-0	4	24-4	19	14-6	4	5-9	4	4-8	1	17-9	1	18-6	1	19-3	1	19-11	1	20-8
72	20-9	30-11½	19-10½	2-3	4	28-3	22	16-10	5	6-8	4	5-3	1	20-9	1	21-6	1	22-3	1	22-11	1	23-8

Reinforcing steel (J6–J15)

EQUAL PIPE SIZE	J6 NO	J6 LGTH	J7 NO	J7 LGTH	J8 NO	J8 LGTH	J9 NO	J9 LGTH	J10 NO	J10 LGTH	J11 NO	J11 LGTH	J12 NO	J12 LGTH	J13 NO	J13 LGTH	J14 NO	J14 LGTH	J15 NO	J15 LGTH
18																				
24	1	12-1																		
30	1	13-5	1	14-2																
36	1	15-2	1	15-11	1	16-7														
42	1	16-6	1	17-3	1	17-11	1	18-8												
48	1	18-2	1	18-11	1	19-7	1	20-4	1	21-1										
54	1	19-9	1	20-6	1	21-2	1	21-11	1	22-8	1	23-5	1	24-1						
60	1	21-5	1	22-2	1	22-10	1	23-7	1	24-4	1	25-1	1	25-9	1	26-6				
72	1	24-5	1	25-2	1	25-10	1	26-7	1	27-4	1	28-1	1	28-9	1	29-6	1	30-3	1	31-0

Reinforcing steel (U–W9)

EQUAL PIPE SIZE	U NO	U LGTH	W1 NO	W1 LGTH	W2 NO	W2 LGTH	W3 NO	W3 LGTH	W4 NO	W4 LGTH	W5 NO	W5 LGTH	W6 NO	W6 LGTH	W7 NO	W7 LGTH	W8 NO	W8 LGTH	W9 NO	W9 LGTH
18	4	4-5	4	2-9	4	2-2	4	1-9												
24	4	6-3	4	3-9	4	3-0	4	2-4	4	1-10										
30	4	6-11	4	4-5	4	3-8	4	2-10	4	2-2	2	1-11								
36	4	8-1	4	5-1	4	4-5	4	3-7	4	2-9	4	2-4								
42	4	9-4	4	5-11	4	5-2	4	4-4	4	3-7	4	2-10	2	2-8						
48	4	10-9	4	6-9	4	5-11	4	5-2	4	4-4	4	3-7	4	2-10						
54	4	11-10	4	7-7	4	6-9	4	5-11	4	5-1	4	4-3	4	3-6	4	3-3				
60	4	13-3	4	8-6	4	7-8	4	6-10	4	6-1	4	5-3	4	4-4	4	3-7	2	3-6		
72	4	15-9	4	10-1	4	9-4	4	8-6	4	7-8	4	6-10	4	6-0	4	5-3	4	4-5	2	4-2

Reinforcing steel (Y1–Y6) and pay quantities for one headwall

EQUAL PIPE SIZE	Y1 NO	Y1 LGTH	Y2 NO	Y2 LGTH	Y3 NO	Y3 LGTH	Y4 NO	Y4 LGTH	Y5 NO	Y5 LGTH	Y6 NO	Y6 LGTH	CONCRETE (CU. YDS.)	STEEL (LBS.)
18	2	3-3	2	5-2									1.26	142
24	2	3-3	2	6-11									2.02	193
30	2	3-3	2	7-5	2	7-8							2.51	251
36	2	3-3	2	7-5	2	8-9							3.28	316
42	2	3-3	2	7-5	2	10-1							4.10	379
48	2	3-3	2	7-5	2	11-5	2	11-5					5.17	475
54	2	3-3	2	7-5	2	11-8	2	12-7					6.22	570
60	2	3-3	2	7-5	2	11-8	2	14-0	2	14-0			7.55	689
72	2	3-3	2	7-5	2	11-8	2	15-11	2	16-6	2	16-6	10.20	916

DIMENSIONS AND REINFORCING FOR FLARED HEADWALL FOR TRIPLE LINE PIPE CULVERT

Dimensions and reinforcing steel (A–J5)

EQUAL PIPE SIZE	G	X	Y	Z	A NO	A LGTH	B NO	B LGTH	C NO	C LGTH	D NO	D LGTH	J1 NO	J1 LGTH	J2 NO	J2 LGTH	J3 NO	J3 LGTH	J4 NO	J4 LGTH	J5 NO	J5 LGTH
18	10-4¼	12-9⅝	9-5¾	1-0	4	13-8	12	6-1	4	2-6	6	2-3	1	10-5	1	11-2	1	11-11	1	12-7	1	13-4
24	12-3⅛	15-11⅜	11-4⅝	1-0	4	16-2	13	7-10	4	3-1	6	2-6	1	12-4	1	13-1	1	13-10	1	14-6	1	15-3
30	14-0⅞	18-5⅝	13-4⅝	1-0	4	18-3	15	8-6	4	3-5	6	2-9	1	14-3	1	15-0	1	15-9	1	16-5	1	17-2
36	17-0⅞	22-0½	16-2⅜	1-3	4	21-9	18	9-7	6	3-10	6	3-0	1	17-1	1	17-10	1	18-7	1	19-3	1	20-0
42	19-0⅞	24-10⅝	18-2⅜	1-3	4	24-3	20	10-9	6	4-4	6	3-5	1	19-1	1	19-10	1	20-7	1	21-3	1	22-0
48	21-8⅜	28-5⅜	20-9⅞	1-6	4	27-4	23	12-1	6	4-10	6	3-10	1	21-9	1	22-6	1	23-3	1	23-11	1	24-8
54	24-2	31-8½	23-3½	1-9	4	30-3	25	13-2	6	5-3	6	4-3	1	24-2	1	24-11	1	25-8	1	26-4	1	27-1
60	26-10¼	35-4⅜	25-11¾	2-0	4	33-5	28	14-6	6	5-9	6	4-8	1	26-11	1	27-8	1	28-5	1	29-1	1	29-10
72	31-5¾	41-8¼	30-7¼	2-3	4	39-0	33	16-10	8	6-8	6	5-3	1	31-6	1	32-3	1	33-0	1	33-8	1	34-5

Reinforcing steel (J6–J15)

EQUAL PIPE SIZE	J6 NO	J6 LGTH	J7 NO	J7 LGTH	J8 NO	J8 LGTH	J9 NO	J9 LGTH	J10 NO	J10 LGTH	J11 NO	J11 LGTH	J12 NO	J12 LGTH	J13 NO	J13 LGTH	J14 NO	J14 LGTH	J15 NO	J15 LGTH
18																				
24	1	16-0																		
30	1	17-11	1	18-8																
36	1	20-9	1	21-6	1	22-2														
42	1	22-9	1	23-6	1	24-2	1	24-11												
48	1	25-5	1	26-2	1	26-10	1	27-7	1	28-4										
54	1	27-10	1	28-7	1	29-3	1	30-0	1	30-9	1	31-6	1	32-2						
60	1	30-7	1	31-4	1	32-0	1	32-9	1	33-6	1	34-3	1	34-11	1	35-8				
72	1	35-2	1	35-11	1	36-7	1	37-4	1	38-1	1	38-10	1	39-6	1	40-3	1	41-0	1	41-9

Reinforcing steel (U–W9)

EQUAL PIPE SIZE	U NO	U LGTH	W1 NO	W1 LGTH	W2 NO	W2 LGTH	W3 NO	W3 LGTH	W4 NO	W4 LGTH	W5 NO	W5 LGTH	W6 NO	W6 LGTH	W7 NO	W7 LGTH	W8 NO	W8 LGTH	W9 NO	W9 LGTH
18	4	4-5	4	2-9	4	2-2	4	1-9												
24	4	6-3	4	3-9	4	3-0	4	2-4	4	1-10										
30	4	6-11	4	4-5	4	3-8	4	2-10	4	2-2	2	1-11								
36	4	8-1	4	5-1	4	4-5	4	3-7	4	2-9	4	2-4								
42	4	9-4	4	5-11	4	5-2	4	4-4	4	3-7	4	2-10	2	2-8						
48	4	10-9	4	6-9	4	5-11	4	5-2	4	4-4	4	3-7	4	2-10						
54	4	11-10	4	7-7	4	6-9	4	5-11	4	5-1	4	4-3	4	3-6	4	3-3				
60	4	13-3	4	8-6	4	7-8	4	6-10	4	6-1	4	5-3	4	4-4	4	3-7	2	3-6		
72	4	15-9	4	10-1	4	9-4	4	8-6	4	7-8	4	6-10	4	6-0	4	5-3	4	4-5	2	4-2

Reinforcing steel (Y1–Y6) and pay quantities for one headwall

EQUAL PIPE SIZE	Y1 NO	Y1 LGTH	Y2 NO	Y2 LGTH	Y3 NO	Y3 LGTH	Y4 NO	Y4 LGTH	Y5 NO	Y5 LGTH	Y6 NO	Y6 LGTH	CONCRETE (CU. YDS.)	STEEL (LBS.)
18	2	3-3	2	5-2									1.63	181
24	2	3-3	2	6-11									2.64	246
30	2	3-3	2	7-5	2	7-8							3.29	313
36	2	3-3	2	7-5	2	8-9							4.34	402
42	2	3-3	2	7-5	2	10-1							5.41	486
48	2	3-3	2	7-5	2	11-5	2	11-5					6.85	511
54	2	3-3	2	7-5	2	11-8	2	12-7					8.27	740
60	2	3-3	2	7-5	2	11-8	2	14-0	2	14-0			10.07	894
72	2	3-3	2	7-5	2	11-8	2	15-11	2	16-6	2	16-6	13.60	1197

GENERAL NOTES:

1. SPECIFICATIONS: MISSISSIPPI DEPARTMENT OF TRANSPORTATION, LATEST EDITION.
2. ALL CONCRETE SHALL BE CLASS "B".
3. ALL EXPOSED EDGES SHALL BE CHAMFERED ¾".
4. EXPOSED CONCRETE SURFACES SHALL BE FINISHED IN ACCORDANCE WITH THE APPLICABLE SECTION OF THE MDOT SPECIFICATIONS.
5. ALL LENGTHS AND QUANTITIES IN THE TABLES HEREON ARE BASED ON CONCRETE TONGUE & GROOVE PIPE.
6. DIMENSIONS SHOWN FOR BAR SPACING ARE TO ℄ BARS.
7. REINFORCEMENT (SINGLE LINE) FOR CONCRETE ARCH PIPE SHALL CONFORM TO REQUIREMENTS OF AASHTO M 206 FOR CLASS OF PIPE SHOWN ON PLANS.
8. QUANTITIES SHOWN SHALL BE THE BASIS FOR FINAL PAYMENT UNLESS AUTHORIZED MODIFICATIONS ARE MADE.

DIMENSIONS AND REINFORCING COMMON TO FLARED HEADWALLS FOR SINGLE, DOUBLE AND TRIPLE LINE PIPE CULVERTS

EQUAL PIPE SIZE	MIN THICK "T"	INSIDE SPAN	INSIDE RISE	H	R	S1	S2	W	W1 X	W1 X1	W2 X	W2 X1	W3 X	W3 X1	W4 X	W4 X1	W5 X	W5 X1	W6 X	W6 X1	W7 X	W7 X1	W8 X	W8 X1	W9 X	W9 X1
18	2½	22	13½	2-4¼	4-6¾	4-8⅝	4-10¼	0-8	1-1	1-8	1-0	1-2	0-10	0-11												
24	3	28½	18	2-11⅜	6-3¼	6-6⅛	6-8	0-10	1-6	2-3	1-3	1-9	1-1	1-3	0-10	1-0										
30	3½	36¼	22½	3-3½	6-11¾	7-3⅜	7-5⅛	1-0	1-10	2-7	1-7	2-1	1-3	1-7	1-0	1-2	0-10	1-1								
36	4	43¾	26⅝	3-8⅝	8-0¼	8-4⅝	8-6½	1-2	2-2	2-11	1-11	2-6	1-7	2-0	1-3	1-6	1-0	1-4								
42	4½	51⅛	31 5/16	4-2⅛	9-2¼	9-7½	9-9⅜	1-4	2-6	3-5	2-2	3-0	1-10	2-6	1-7	2-0	1-3	1-7	1-2	1-6						
48	5	58½	36	4-8	10-5¾	11-0	11-1⅛	1-6	2-10	3-11	2-6	3-5	2-2	3-0	1-10	2-6	1-6	2-1	1-3	1-7						
54	5½	65	40	5-1¼	11-6¾	12-1¾	12-3⅝	1-8	3-2	4-5	2-10	3-11	2-6	3-5	2-2	2-11	1-10	2-5	1-6	2-0	1-5	1-10				
60	6	73	45	5-7¼	12-10¾	13-6¾	13-8⅝	1-10	3-7	4-11	3-3	4-5	2-11	3-11	2-7	3-6	2-3	3-0	1-10	2-6	1-6	2-1	1-6	2-0		
72	7	88	54	6-6¼	15-2¾	16-0⅝	16-2½	2-2	4-4	5-9	4-0	5-4	3-8	4-10	3-3	4-5	2-11	3-11	2-7	3-5	2-3	3-0	1-11	2-6	1-10	2-4

(H through W are under DIMENSIONS; W1–W9 are under DETAIL DIMENSIONS FOR COMMON WING WALL REINFORCING STEEL.)

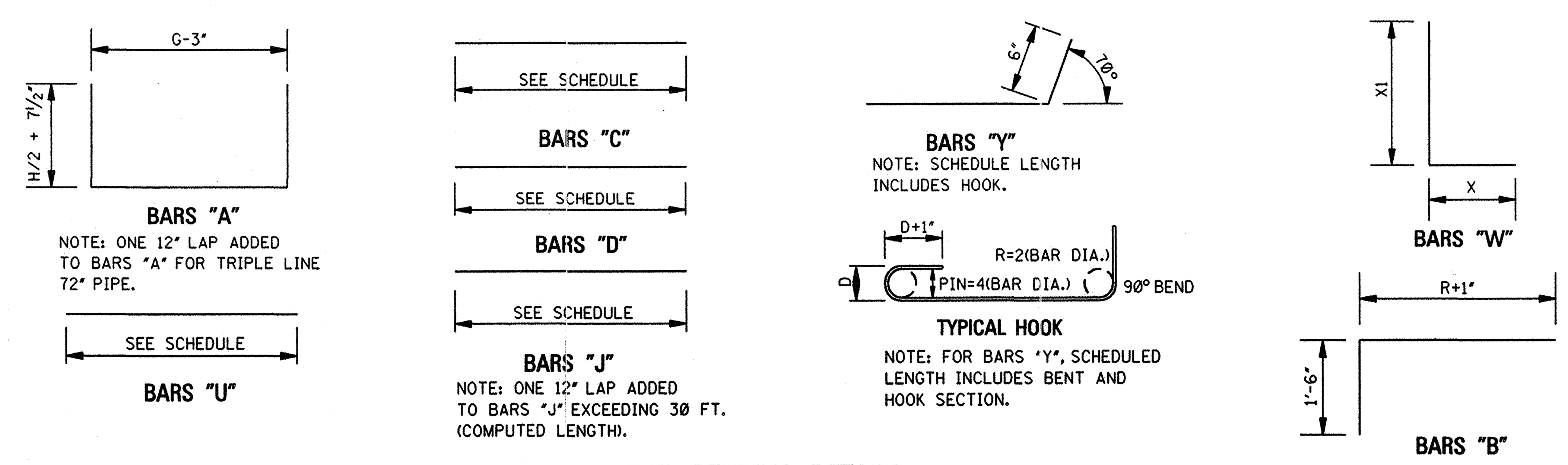

BAR BENDING DETAILS
NOTE: ALL BARS ARE #4.

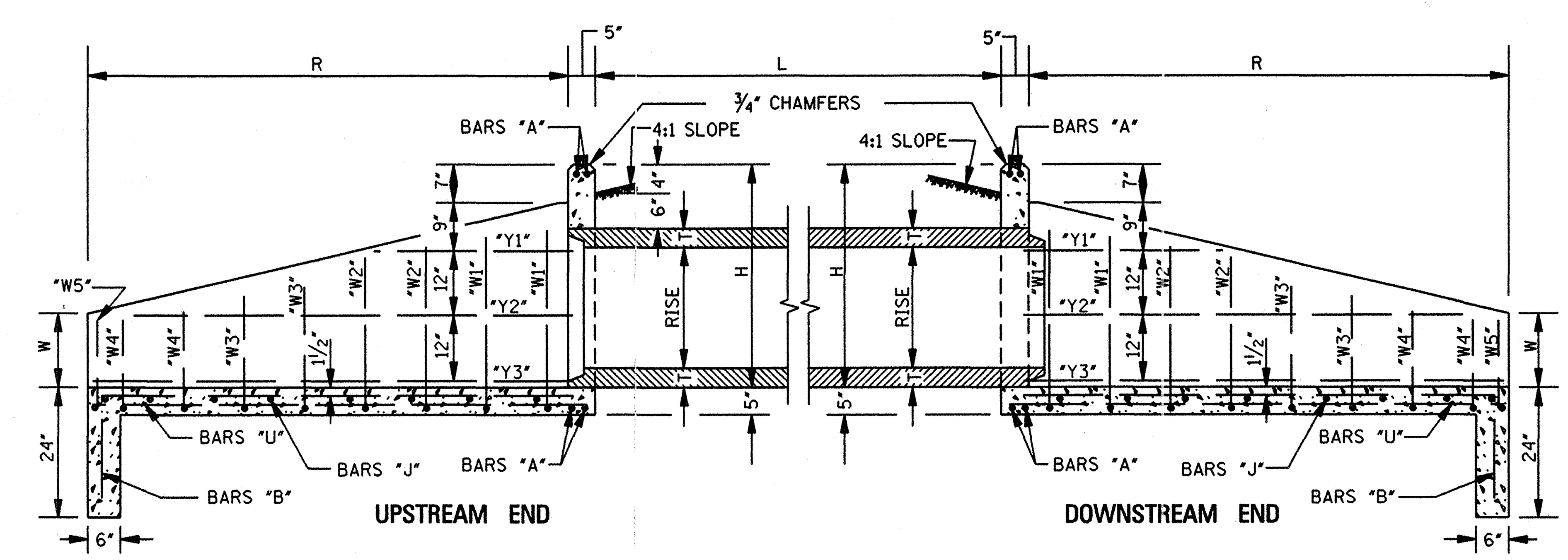

SECTION B–B

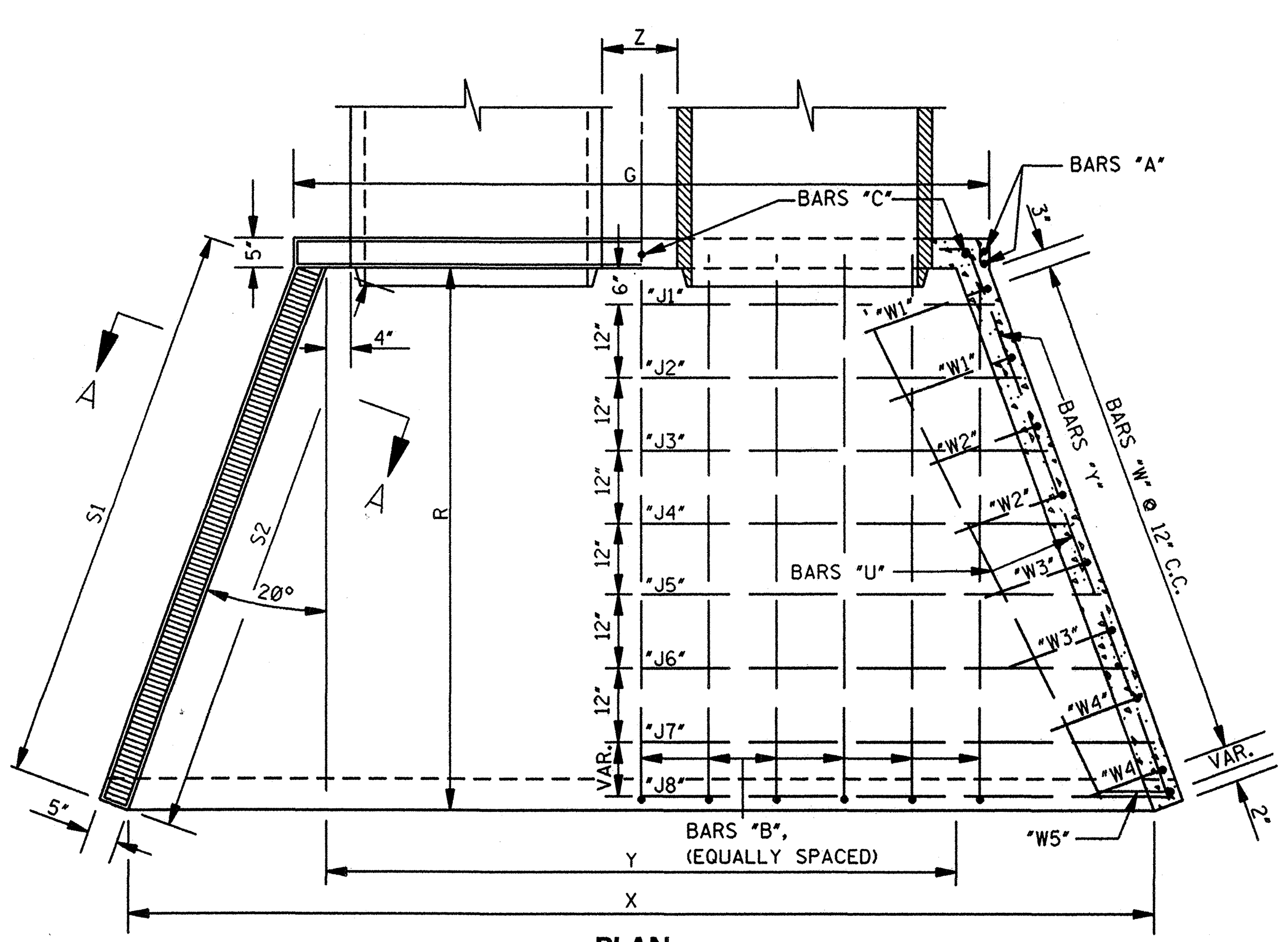

PLAN

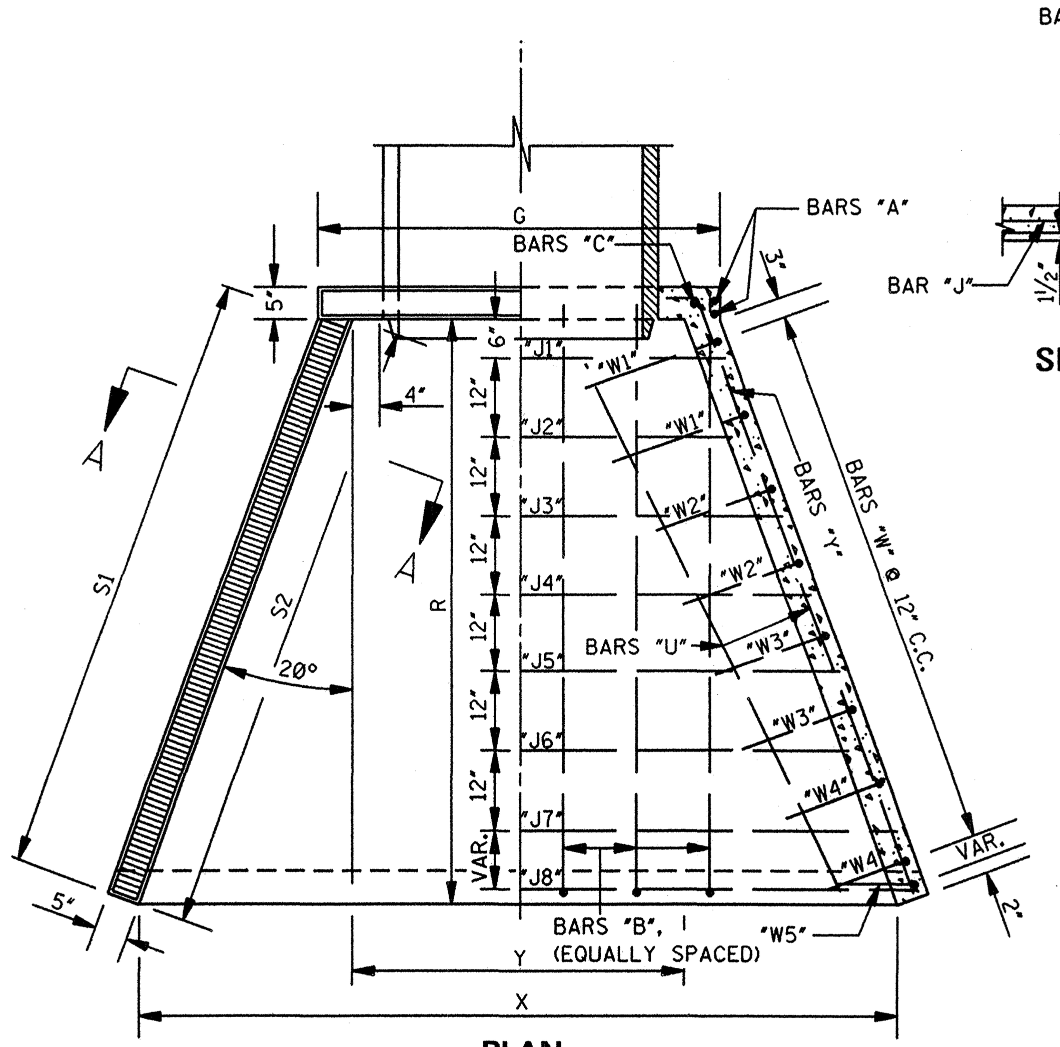

PLAN

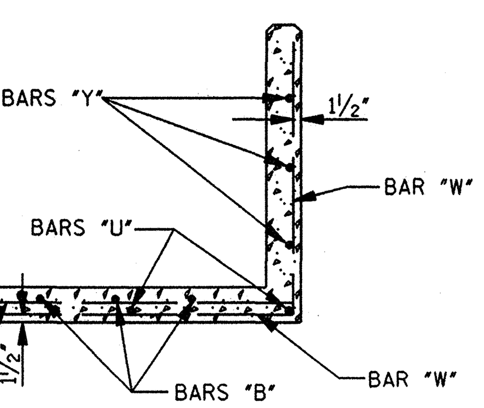

SECTION A–A

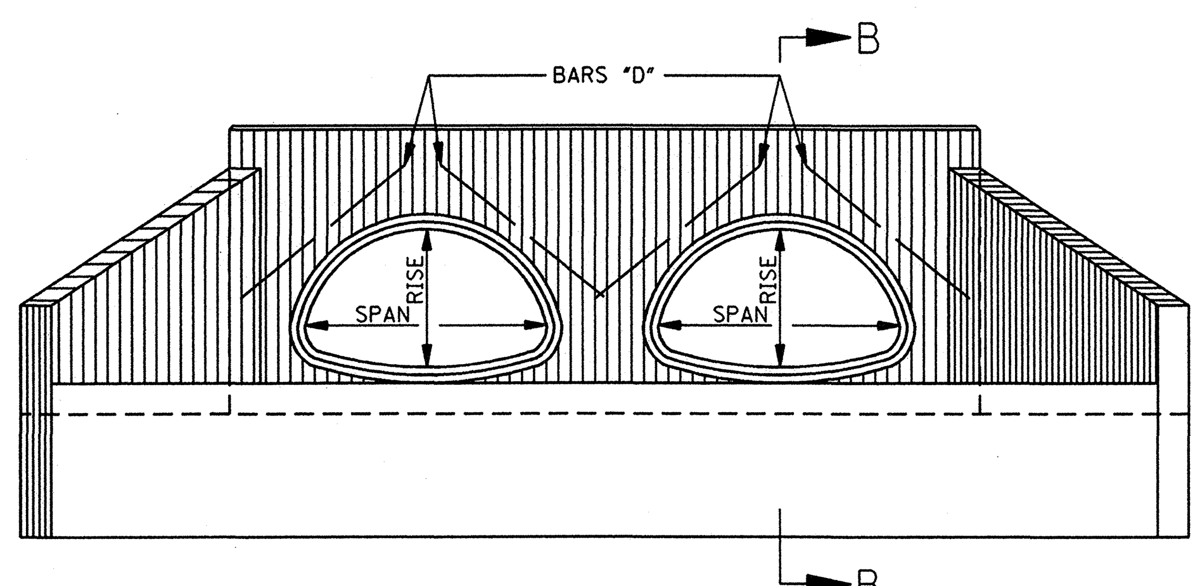

FRONT ELEVATION

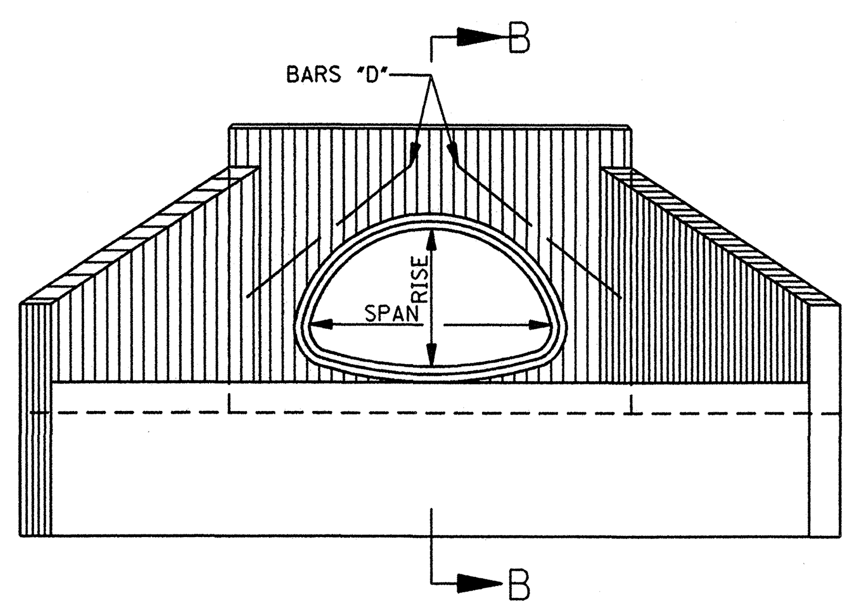

FRONT ELEVATION

BY	MISSISSIPPI DEPARTMENT OF TRANSPORTATION
	ROADWAY DESIGN DIVISION
	STANDARD PLAN
REVISION	**HEADWALLS FOR CONCRETE ARCH PIPE, 4:1 SLOPE, 0°– 15° SKEW**
	ENGLISH
	WORKING NUMBER HWA-4100
DATE	ISSUE DATE: OCTOBER 1, 1998
	SHEET NUMBER 351