| STATE | PROJECT NO. |
|---|---|
| MISS. | |

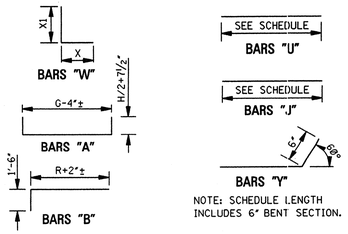


NOTE: SCHEDULE LENGTH INCLUDES 6" BENT SECTION.

## BAR BENDING DETAILS

NOTE: WHENEVER THE COMPUTED LENGTH OF BAR EXCEEDS 30', THE SCHEDULED LENGTH INCLUDES A 12" LAP. ALL BARS ARE #4 EXCEPT BARS 'W'. SEE SCHEDULE FOR SIZE OF BARS 'W'.

### DIMENSIONS AND REINFORCING COMMON TO FLARED HEADWALLS FOR SINGLE, DOUBLE AND TRIPLE LINE PIPE CULVERTS

| PIPE DIA | MIN THK "T" | DIMENSIONS C | H | R | S1 | S2 | U | W | REINFORCING STEEL U NO | U LGTH | W1 NO | W1 SIZE | W1 X | W1 X1 | W1 LGTH | W2 NO | W2 SIZE | W2 X | W2 X1 | W2 LGTH | W3 NO | W3 SIZE | W3 X | W3 X1 | W3 LGTH | W4 NO | W4 SIZE | W4 X | W4 X1 | W4 LGTH | W5 NO | W5 SIZE | W5 X | W5 X1 | W5 LGTH | W6 NO | W6 SIZE | W6 X | W6 X1 | W6 LGTH | W7 NO | W7 SIZE | W7 X | W7 X1 | W7 LGTH | W8 NO | W8 SIZE | W8 X | W8 X1 | W8 LGTH | Y1 NO | Y1 LGTH | Y2 NO | Y2 LGTH | Y3 NO | Y3 LGTH | Y4 NO | Y4 LGTH | Y5 NO | Y5 LGTH | Y6 NO | Y6 LGTH | Y7 NO | Y7 LGTH | Y8 NO | Y8 LGTH |
|---|---|---|---|---|---|---|---|---|---|---|---|---|---|---|---|---|---|---|---|---|---|---|---|---|---|---|---|---|---|---|---|---|---|---|---|---|---|---|---|---|---|---|---|---|---|---|---|---|---|---|---|---|---|---|---|---|---|---|---|---|---|---|---|---|---|---|---|---|
| 15 | 2¼ | 7 | 2-5 | 2-7 | 2-8¼ | 2-11¾ | 6 | 0-8 | 4 | 2-6 | 4 | #4 | 1-1 | 1-8 | 2-9 | 4 | #4 | 1-0 | 1-0 | 2-0 | | | | | | | | | | | | | | | | | | | | | | | | | | | | | 2 | 2-7 | 2 | 3-8 | | | | | | | | | | | | | | | |
| 18 | 2½ | 7 | 2-9½ | 3-0 | 3-2⅛ | 3-5⅝ | 6 | 0-10 | 4 | 3-2 | 4 | #4 | 1-3 | 2-0 | 3-3 | 4 | #4 | 1-0 | 1-0 | 2-0 | | | | | | | | | | | | | | | | | | | | | | | | | | | | | 2 | 2-7 | 2 | 4-2 | | | | | | | | | | | | | | | |
| 24 | 3 | 7 | 3-4½ | 3-10 | 4-1⅝ | 4-5⅛ | 6 | 1-0 | 4 | 4-2 | 4 | #4 | 1-8 | 2-7 | 4-3 | 4 | #4 | 1-4 | 1-7 | 2-11 | 2 | #4 | 1-1 | 1-2 | 2-3 | | | | | | | | | | | | | | | | | | | | | | | | | 2 | 2-7 | 2 | 4-7 | | | | | | | | | | | | | | | |
| 30 | 3½ | 7 | 3-11½ | 4-6 | 4-10⅞ | 5-2⅞ | 6 | 1-3 | 4 | 4-11 | 4 | #4 | 2-1 | 3-2 | 5-3 | 4 | #4 | 1-7 | 2-2 | 3-9 | 2 | #4 | 1-1 | 1-2 | 2-3 | | | | | | | | | | | | | | | | | | | | | | | | | 2 | 2-7 | 2 | 4-7 | 2 | 5-9 | | | | | | | | | | | | | |
| 36 | 4 | 7½ | 4-6½ | 5-3 | 5-9¼ | 6-0¾ | 6 | 1-5 | 4 | 5-10 | 4 | #5 | 2-5 | 3-9 | 6-2 | 4 | #4 | 2-0 | 2-9 | 4-9 | 6 | #4 | 1-5 | 1-9 | 3-2 | | | | | | | | | | | | | | | | | | | | | | | | | 2 | 2-7 | 2 | 4-7 | 4 | 6-7 | | | | | | | | | | | | | |
| 42 | 4½ | 7½ | 5-1½ | 5-11 | 6-6½ | 6-10 | 6 | 1-8 | 4 | 6-7 | 4 | #5 | 2-11 | 4-4 | 7-3 | 4 | #4 | 2-3 | 3-4 | 5-7 | 4 | #4 | 1-7 | 2-4 | 3-11 | 4 | #4 | 1-3 | 1-10 | 3-1 | | | | | | | | | | | | | | | | | | | | | 2 | 2-7 | 2 | 4-7 | 2 | 6-7 | 2 | 7-7 | | | | | | | | | |
| 48 | 5 | 7½ | 5-8½ | 6-8 | 7-4⅞ | 7-8⅜ | 6 | 1-10½ | 4 | 7-5 | 4 | #5 | 3-1 | 4-10 | 7-11 | 4 | #5 | 2-8 | 3-10 | 6-6 | 4 | #4 | 2-0 | 2-10 | 4-10 | 4 | #4 | 1-3 | 1-10 | 3-1 | | | | | | | | | | | | | | | | | | | | | 2 | 2-7 | 2 | 4-7 | 2 | 6-7 | 4 | 8-5 | | | | | | | | | |
| 54 | 5½ | 8 | 6-3½ | 7-4 | 8-2⅞ | 8-5⅞ | 6 | 2-1 | 4 | 8-3 | 4 | #5 | 3-6 | 5-4 | 8-10 | 4 | #5 | 3-0 | 4-4 | 7-4 | 4 | #4 | 2-3 | 3-4 | 5-7 | 6 | #4 | 1-8 | 2-4 | 4-0 | | | | | | | | | | | | | | | | | | | | | 2 | 2-7 | 2 | 4-7 | 2 | 6-7 | 6 | 9-3 | | | | | | | | | |
| 60 | 6 | 8 | 6-10½ | 8-2 | 9-1¼ | 9-5⅞ | 6 | 2-3 | 4 | 9-2 | 4 | #5 | 3-10 | 5-11 | 9-9 | 4 | #5 | 3-3 | 4-11 | 8-2 | 4 | #5 | 2-6 | 3-11 | 6-5 | 6 | #4 | 1-10 | 2-11 | 4-9 | 2 | #4 | 1-7 | 2-5 | 4-0 | | | | | | | | | | | | | | | | | 2 | 2-7 | 2 | 4-7 | 2 | 6-7 | 2 | 9-7 | 4 | 10-5 | | | | | | | |
| 66 | 6½ | 8 | 7-7 | 9-2 | 10-3¼ | 10-7 | 6½ | 2-6½ | 4 | 10-3 | 4 | #6 | 4-3 | 6-8 | 10-11 | 4 | #5 | 3-8 | 5-8 | 9-4 | 4 | #5 | 3-2 | 4-8 | 7-10 | 6 | #5 | 2-7 | 3-8 | 6-3 | 4 | #4 | 1-10 | 2-8 | 4-6 | | | | | | | | | | | | | | | | | 2 | 2-7 | 2 | 4-7 | 2 | 6-7 | 2 | 9-7 | 6 | 11-4 | | | | | | | |
| 72 | 7 | 8 | 8-2 | 9-10 | 11-0¼ | 11-4¼ | 7 | 2-9 | 4 | 10-9 | 4 | #6 | 4-9 | 7-5 | 12-2 | 4 | #6 | 4-2 | 6-5 | 10-7 | 4 | #5 | 3-6 | 5-5 | 8-11 | 6 | #5 | 2-10 | 4-5 | 7-3 | 4 | #4 | 2-0 | 3-5 | 5-5 | 2 | #4 | 1-8 | 2-5 | 4-1 | | | | | | | | | | | | | 2 | 2-7 | 2 | 4-7 | 2 | 6-7 | 2 | 9-7 | 2 | 11-7 | 4 | 12-2 | | | | | |
| 84 | 8 | 8 | 9-4 | 11-2 | 12-6⅞ | 12-10⅞ | 8 | 3-2 | 4 | 12-6 | 4 | #6 | 5-5 | 8-7 | 14-0 | 4 | #6 | 5-2 | 7-7 | 12-9 | 4 | #6 | 4-6 | 6-7 | 11-1 | 6 | #5 | 3-9 | 5-7 | 9-4 | 4 | #5 | 3-2 | 4-7 | 7-9 | 4 | #5 | 2-6 | 3-7 | 6-1 | | | | | | | | | | | | | 2 | 2-7 | 2 | 4-7 | 2 | 6-7 | 2 | 9-7 | 2 | 11-7 | 8 | 13-8 | | | | | |
| 96 | 9 | 8 | 10-5 | 12-7 | 14-1¾ | 14-6⅜ | 8 | 3-7 | 4 | 14-2 | 4 | #7 | 5-7 | 9-6 | 15-1 | 4 | #7 | 5-7 | 8-6 | 14-1 | 4 | #6 | 5-0 | 7-6 | 12-6 | 6 | #5 | 4-4 | 6-6 | 10-10 | 2 | #5 | 3-8 | 5-6 | 9-2 | 4 | #5 | 3-0 | 4-6 | 7-6 | 4 | #5 | 2-5 | 3-6 | 5-11 | | | | | | | 2 | 2-7 | 2 | 4-7 | 2 | 6-7 | 2 | 9-7 | 2 | 11-7 | 2 | 13-4 | 6 | 15-2 | | |
| 108 | 10 | 8 | 11-7 | 14-1 | 15-10 | 16-3⅞ | 9 | 4-0 | 4 | 15-10 | 4 | #7 | 6-5 | 10-9 | 17-2 | 6 | #7 | 6-5 | 9-9 | 16-2 | 4 | #7 | 5-10 | 8-9 | 14-7 | 6 | #6 | 5-2 | 7-9 | 12-11 | 4 | #5 | 4-6 | 6-9 | 11-3 | 4 | #5 | 3-10 | 5-9 | 9-7 | 2 | #5 | 3-2 | 4-9 | 7-11 | 4 | #5 | 2-8 | 3-9 | 6-5 | 2 | 2-4 | 2 | 4-7 | 2 | 6-7 | 2 | 9-7 | 2 | 11-7 | 2 | 14-1 | 2 | 15-4 | 6 | 16-10 |

GENERAL NOTES:

1. SPECIFICATIONS: MISSISSIPPI DEPARTMENT OF TRANSPORTATION, LATEST EDITION.
2. ALL CONCRETE SHALL BE CLASS 'B'.
3. ALL EXPOSED EDGES SHALL BE CHAMFERED ¾".
4. EXPOSED CONCRETE SURFACES SHALL BE FINISHED IN ACCORDANCE WITH THE APPLICABLE SECTION OF THE MDOT SPECIFICATIONS.
5. ALL LENGTHS AND QUANTITIES IN THE TABLES HEREON ARE BASED ON CONCRETE PIPE.
6. QUANTITIES SHOWN SHALL BE THE BASIS FOR FINAL PAYMENT UNLESS AUTHORIZED MODIFICATIONS ARE MADE.

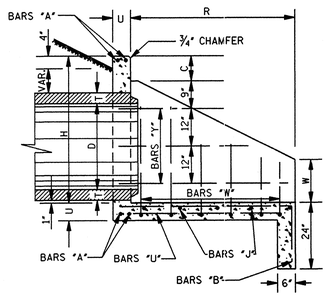


SECTION B–B

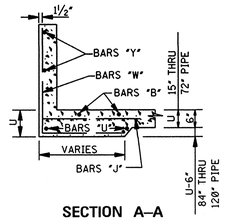


SECTION A–A

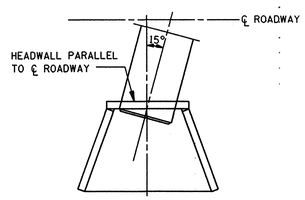


15° SKEW INSTALLATION
PLAN

### DIMENSIONS AND REINFORCING FOR FLARED HEADWALL FOR SINGLE LINE PIPE CULVERT

| PIPE DIA | DIMENSIONS A | B | E | G | X | Y | Z | REINFORCING STEEL A NO | A LGTH | B NO | B LGTH | C NO | C LGTH | D NO | D LGTH | J1 NO | J1 LGTH | J2 NO | J2 LGTH | J3 NO | J3 LGTH | J4 NO | J4 LGTH | J5 NO | J5 LGTH | J6 NO | J6 LGTH | J7 NO | J7 LGTH | J8 NO | J8 LGTH | J9 NO | J9 LGTH | J10 NO | J10 LGTH | J11 NO | J11 LGTH | J12 NO | J12 LGTH | J13 NO | J13 LGTH | J14 NO | J14 LGTH | PAY QTY 1-HEADWALL CONC CU YDS | STEEL LBS |
|---|---|---|---|---|---|---|---|---|---|---|---|---|---|---|---|---|---|---|---|---|---|---|---|---|---|---|---|---|---|---|---|---|---|---|---|---|---|---|---|---|---|---|---|---|
| 15 | - | - | - | 3-4⅞ | 5-2¾ | 2-3 | - | 4 | 6-8 | 4 | 4-3 | 2 | 2-8 | 2 | 1-10 | 1 | 3-9 | 1 | 4-11 | 1 | 5-6 | | | | | | | | | | | | | | | | | | | | | | 0.67 | 73 |
| 18 | - | - | - | 3-7⅞ | 5-11⅞ | 2-6 | - | 4 | 7-3 | 5 | 4-8 | 2 | 3-0 | 2 | 2-0 | 1 | 3-11 | 1 | 5-1 | 1 | 6-3 | 1 | 6-3 | | | | | | | | | | | | | | | | | | | | 0.84 | 88 |
| 24 | - | - | - | 4-2⅞ | 7-6⅛ | 3-1 | - | 4 | 8-5 | 5 | 5-6 | 2 | 3-7 | 2 | 2-3 | 1 | 4-6 | 1 | 5-8 | 1 | 6-10 | 1 | 8-0 | 1 | 7-9 | | | | | | | | | | | | | | | | | | 1.19 | 114 |
| 30 | - | - | - | 4-10⅜ | 8-10⅞ | 3-8½ | - | 4 | 9-8 | 6 | 6-2 | 2 | 4-2 | 2 | 2-6 | 1 | 5-2 | 1 | 6-4 | 1 | 7-6 | 1 | 8-8 | 1 | 9-0 | | | | | | | | | | | | | | | | | | 1.58 | 140 |
| 36 | - | - | - | 5-4⅞ | 10-3¾ | 4-3 | - | 4 | 10-9 | 7 | 6-11 | 2 | 4-9 | 2 | 2-9 | 1 | 5-8 | 1 | 6-10 | 1 | 8-0 | 1 | 9-2 | 1 | 10-4 | 1 | 10-6 | | | | | | | | | | | | | | | | 2.02 | 181 |
| 42 | - | - | - | 5-11⅞ | 11-8 | 4-10 | - | 4 | 11-11 | 7 | 7-7 | 2 | 5-4 | 2 | 3-0 | 1 | 6-3 | 1 | 7-5 | 1 | 8-7 | 1 | 9-9 | 1 | 10-11 | 1 | 12-1 | 1 | 11-9 | | | | | | | | | | | | | | 2.50 | 234 |
| 48 | - | - | - | 6-6⅞ | 13-1⅞ | 5-5 | - | 4 | 13-1 | 8 | 8-4 | 2 | 5-11 | 2 | 3-3 | 1 | 6-10 | 1 | 8-0 | 1 | 9-2 | 1 | 10-4 | 1 | 11-6 | 1 | 12-8 | 1 | 13-3 | | | | | | | | | | | | | | 3.07 | 271 |
| 54 | - | - | - | 7-2⅞ | 14-6⅞ | 6-1 | - | 4 | 14-4 | 8 | 9-0 | 2 | 6-6 | 2 | 3-6 | 1 | 7-6 | 1 | 8-8 | 1 | 9-10 | 1 | 11-0 | 1 | 12-2 | 1 | 13-4 | 1 | 14-6 | 1 | 14-9 | | | | | | | | | | | | 3.65 | 336 |
| 60 | - | - | - | 7-9⅞ | 16-1⅛ | 6-8 | - | 4 | 15-6 | 9 | 9-10 | 2 | 7-1 | 2 | 3-9 | 1 | 8-1 | 1 | 9-3 | 1 | 10-5 | 1 | 11-7 | 1 | 12-9 | 1 | 13-11 | 1 | 15-1 | 1 | 16-3 | 1 | 16-3 | | | | | | | | | | 4.35 | 397 |
| 66 | - | - | - | 8-6 | 17-10 | 7-3 | - | 4 | 16-11 | 9 | 10-10 | 2 | 7-10 | 2 | 4-3 | 1 | 8-9 | 1 | 10-0 | 1 | 11-2 | 1 | 12-4 | 1 | 13-6 | 1 | 14-7 | 1 | 15-9 | 1 | 16-11 | 1 | 18-0 | 1 | 18-0 | | | | | | | | 5.71 | 513 |
| 72 | - | - | - | 9-2⅛ | 19-2¼ | 7-10 | - | 4 | 18-2 | 10 | 11-6 | 2 | 8-6 | 2 | 4-7 | 1 | 9-5 | 1 | 10-7 | 1 | 11-9 | 1 | 12-11 | 1 | 14-1 | 1 | 15-3 | 1 | 16-5 | 1 | 17-7 | 1 | 18-8 | 1 | 19-6 | | | | | | | | 7.01 | 594 |
| 84 | 4-0 | 17-0 | 2-0 | 10-6½ | 21-10¾ | 9-0 | - | 4 | 20-8 | 11 | 12-10 | 2 | 9-8 | 2 | 5-3 | 1 | 10-9 | 1 | 11-11 | 1 | 13-1 | 1 | 14-3 | 1 | 15-5 | 1 | 16-7 | 1 | 17-9 | 1 | 18-11 | 1 | 20-1 | 1 | 21-3 | 2 | 22-4 | | | | | | 9.82 | 801 |
| 96 | 4-3 | 18-2 | 2-0 | 11-7 | 24-8⅜ | 10-2 | - | 4 | 22-11 | 12 | 14-3 | 2 | 10-9 | 2 | 5-9 | 1 | 12-0 | 1 | 13-2 | 1 | 14-4 | 1 | 15-6 | 1 | 16-8 | 1 | 17-10 | 1 | 19-0 | 1 | 20-2 | 1 | 21-4 | 1 | 22-6 | 1 | 23-8 | 1 | 24-10 | 1 | 24-11 | | 12.16 | 980 |
| 108 | 4-10 | 20-10 | 2-0 | 12-11⅛ | 27-7⅛ | 11-4 | - | 4 | 25-5 | 14 | 15-9 | 2 | 12-0 | 2 | 6-4 | 1 | 13-2 | 1 | 14-4 | 1 | 15-6 | 1 | 16-8 | 1 | 17-10 | 1 | 19-0 | 1 | 20-2 | 1 | 21-4 | 1 | 22-6 | 1 | 23-8 | 1 | 24-10 | 1 | 26-0 | 1 | 27-2 | 1 | 27-10 | 16.66 | 1333 |

### DIMENSIONS AND REINFORCING FOR FLARED HEADWALL FOR DOUBLE LINE PIPE CULVERT

| PIPE DIA | DIMENSIONS A | B | E | G | X | Y | Z | REINFORCING STEEL A NO | A LGTH | B NO | B LGTH | C NO | C LGTH | D NO | D LGTH | J1 NO | J1 LGTH | J2 NO | J2 LGTH | J3 NO | J3 LGTH | J4 NO | J4 LGTH | J5 NO | J5 LGTH | J6 NO | J6 LGTH | J7 NO | J7 LGTH | J8 NO | J8 LGTH | J9 NO | J9 LGTH | J10 NO | J10 LGTH | J11 NO | J11 LGTH | J12 NO | J12 LGTH | J13 NO | J13 LGTH | J14 NO | J14 LGTH | PAY QTY 1-HEADWALL CONC CU YDS | STEEL LBS |
|---|---|---|---|---|---|---|---|---|---|---|---|---|---|---|---|---|---|---|---|---|---|---|---|---|---|---|---|---|---|---|---|---|---|---|---|---|---|---|---|---|---|---|---|---|
| 15 | - | - | - | 5-11⅞ | 7-9¾ | 4-10 | 1-0 | 4 | 9-3 | 7 | 4-3 | 3 | 2-8 | 4 | 1-10 | 1 | 6-3 | 1 | 7-5 | 1 | 8-1 | | | | | | | | | | | | | | | | | | | | | | 0.97 | 98 |
| 18 | - | - | - | 6-5⅞ | 8-9⅝ | 5-4 | 1-0 | 4 | 10-1 | 8 | 4-8 | 3 | 3-0 | 4 | 2-0 | 1 | 6-9 | 1 | 7-11 | 1 | 9-1 | 1 | 9-1 | | | | | | | | | | | | | | | | | | | | 1.20 | 117 |
| 24 | - | - | - | 7-7⅞ | 10-11⅞ | 6-6 | 1-0 | 4 | 11-10 | 9 | 5-6 | 3 | 3-7 | 4 | 2-3 | 1 | 7-11 | 1 | 9-1 | 1 | 10-3 | 1 | 11-5 | 1 | 11-2 | | | | | | | | | | | | | | | | | | 1.69 | 155 |
| 30 | - | - | - | 9-1⅞ | 13-2⅝ | 8-0 | 1-3 | 4 | 13-11 | 10 | 6-2 | 4 | 4-2 | 4 | 2-6 | 1 | 9-6 | 1 | 10-8 | 1 | 11-9 | 1 | 12-11 | 1 | 13-3 | | | | | | | | | | | | | | | | | | 2.28 | 191 |
| 36 | - | - | - | 10-5⅞ | 15-4¾ | 9-4 | 1-6 | 4 | 15-10 | 12 | 6-11 | 4 | 4-9 | 4 | 2-9 | 1 | 10-9 | 1 | 11-11 | 1 | 13-1 | 1 | 14-3 | 1 | 15-5 | 1 | 15-7 | | | | | | | | | | | | | | | | 2.94 | 249 |
| 42 | - | - | - | 11-10⅞ | 17-7 | 10-9 | 1-9 | 4 | 17-10 | 13 | 7-7 | 4 | 5-4 | 4 | 3-0 | 1 | 12-2 | 1 | 13-4 | 1 | 14-6 | 1 | 15-8 | 1 | 16-10 | 1 | 18-0 | 1 | 17-8 | | | | | | | | | | | | | | 3.68 | 319 |
| 48 | - | - | - | 13-3⅞ | 19-10⅝ | 12-2 | 2-0 | 4 | 19-10 | 15 | 8-4 | 4 | 5-11 | 4 | 3-3 | 1 | 13-7 | 1 | 14-9 | 1 | 15-11 | 1 | 17-1 | 1 | 18-3 | 1 | 19-5 | 1 | 20-0 | | | | | | | | | | | | | | 4.54 | 372 |
| 54 | - | - | - | 14-10⅞ | 22-2⅝ | 13-9 | 2-3 | 4 | 22-0 | 16 | 9-0 | 5 | 6-6 | 4 | 3-6 | 1 | 15-2 | 1 | 16-4 | 1 | 17-6 | 1 | 18-8 | 1 | 19-10 | 1 | 21-0 | 1 | 22-2 | 1 | 22-5 | | | | | | | | | | | | 5.44 | 464 |
| 60 | - | - | - | 16-3⅞ | 24-7⅛ | 15-2 | 2-6 | 4 | 24-0 | 17 | 9-10 | 5 | 7-1 | 4 | 3-9 | 1 | 16-7 | 1 | 17-9 | 1 | 18-11 | 1 | 20-1 | 1 | 21-3 | 1 | 22-5 | 1 | 23-7 | 1 | 24-9 | 1 | 24-9 | | | | | | | | | | 6.51 | 543 |
| 66 | - | - | - | 17-10 | 27-2 | 16-7 | 2-9 | 4 | 26-3 | 18 | 10-10 | 5 | 7-10 | 4 | 4-3 | 1 | 18-1 | 1 | 19-3 | 1 | 20-4 | 1 | 21-6 | 1 | 22-8 | 1 | 23-10 | 1 | 25-0 | 1 | 26-2 | 2 | 27-4 | | | | | | | | | | 8.52 | 685 |
| 72 | - | - | - | 19-4⅞ | 29-4¼ | 18-0 | 3-0 | 4 | 28-4 | 20 | 11-6 | 5 | 8-6 | 4 | 4-7 | 1 | 19-7 | 1 | 20-9 | 1 | 21-11 | 1 | 23-1 | 1 | 24-3 | 1 | 25-5 | 1 | 26-7 | 1 | 27-9 | 1 | 28-10 | 1 | 29-8 | | | | | | | | 10.49 | 789 |
| 84 | 3-0 | 28-10 | 13-10 | 22-4½ | 33-8¾ | 21-10 | 3-6 | 4 | 33-6 | 23 | 12-10 | 6 | 9-8 | 4 | 5-3 | 1 | 22-7 | 1 | 23-9 | 1 | 24-11 | 1 | 26-1 | 1 | 27-3 | 1 | 28-5 | 1 | 29-7 | 1 | 31-9 | 1 | 32-11 | 1 | 34-1 | 2 | 35-2 | | | | | | 14.34 | 1070 |
| 96 | 3-0 | 31-8 | 15-6 | 25-1 | 38-2⅜ | 23-8 | 4-0 | 4 | 37-5 | 26 | 14-3 | 7 | 10-9 | 4 | 5-9 | 1 | 25-6 | 1 | 26-8 | 1 | 27-10 | 1 | 29-0 | 1 | 31-2 | 1 | 32-4 | 1 | 33-6 | 1 | 34-8 | 1 | 35-10 | 1 | 37-0 | 1 | 38-2 | 1 | 39-4 | 1 | 39-5 | | 17.79 | 1319 |
| 108 | 3-0 | 36-0 | 17-2 | 28-1⅛ | 42-9⅛ | 26-6 | 4-6 | 4 | 41-7 | 29 | 15-9 | 7 | 12-0 | 4 | 6-4 | 1 | 28-4 | 1 | 29-6 | 1 | 31-8 | 1 | 32-10 | 1 | 34-0 | 1 | 35-2 | 1 | 36-4 | 1 | 37-6 | 1 | 38-8 | 1 | 39-10 | 1 | 41-0 | 1 | 42-2 | 1 | 43-4 | 1 | 44-0 | 24.00 | 1733 |

### DIMENSIONS AND REINFORCING FOR FLARED HEADWALL FOR TRIPLE LINE PIPE CULVERT

| PIPE DIA | DIMENSIONS A | B | E | G | X | Y | Z | REINFORCING STEEL A NO | A LGTH | B NO | B LGTH | C NO | C LGTH | D NO | D LGTH | J1 NO | J1 LGTH | J2 NO | J2 LGTH | J3 NO | J3 LGTH | J4 NO | J4 LGTH | J5 NO | J5 LGTH | J6 NO | J6 LGTH | J7 NO | J7 LGTH | J8 NO | J8 LGTH | J9 NO | J9 LGTH | J10 NO | J10 LGTH | J11 NO | J11 LGTH | J12 NO | J12 LGTH | J13 NO | J13 LGTH | J14 NO | J14 LGTH | PAY QTY 1-HEADWALL CONC CU YDS | STEEL LBS |
|---|---|---|---|---|---|---|---|---|---|---|---|---|---|---|---|---|---|---|---|---|---|---|---|---|---|---|---|---|---|---|---|---|---|---|---|---|---|---|---|---|---|---|---|---|
| 15 | - | - | - | 8-6⅞ | 10-4¾ | 7-5 | 1-0 | 4 | 11-10 | 10 | 4-3 | 4 | 2-8 | 6 | 1-10 | 1 | 8-9 | 1 | 9-11 | 1 | 10-6 | | | | | | | | | | | | | | | | | | | | | | 1.27 | 122 |
| 18 | - | - | - | 9-3⅞ | 11-7⅝ | 8-2 | 1-0 | 4 | 12-11 | 11 | 4-8 | 4 | 3-0 | 6 | 2-0 | 1 | 9-7 | 1 | 10-9 | 1 | 11-11 | 1 | 11-11 | | | | | | | | | | | | | | | | | | | | 1.56 | 146 |
| 24 | - | - | - | 11-0⅞ | 14-4⅛ | 9-11 | 1-0 | 4 | 15-3 | 13 | 5-6 | 4 | 3-7 | 6 | 2-3 | 1 | 11-4 | 1 | 12-6 | 1 | 13-8 | 1 | 14-10 | 1 | 14-7 | | | | | | | | | | | | | | | | | | 2.19 | 195 |
| 30 | - | - | - | 13-5⅞ | 17-5⅞ | 12-3½ | 1-3 | 4 | 18-3 | 14 | 6-2 | 6 | 4-2 | 6 | 2-6 | 1 | 13-9 | 1 | 14-11 | 1 | 16-1 | 1 | 17-2 | 1 | 17-4 | | | | | | | | | | | | | | | | | | 2.98 | 242 |
| 36 | - | - | - | 15-6⅞ | 20-5¾ | 14-5 | 1-6 | 4 | 20-11 | 17 | 6-11 | 6 | 4-9 | 6 | 2-9 | 1 | 15-10 | 1 | 17-0 | 1 | 18-2 | 1 | 19-4 | 1 | 20-6 | 1 | 20-8 | | | | | | | | | | | | | | | | 3.86 | 312 |
| 42 | - | - | - | 17-9⅞ | 23-6 | 16-8 | 1-9 | 4 | 23-9 | 19 | 7-7 | 6 | 5-4 | 6 | 3-0 | 1 | 18-1 | 1 | 19-3 | 1 | 20-5 | 1 | 21-7 | 1 | 22-9 | 1 | 23-11 | 1 | 23-7 | | | | | | | | | | | | | | 4.86 | 404 |
| 48 | - | - | - | 20-0⅞ | 26-7⅞ | 18-11 | 2-0 | 4 | 26-7 | 22 | 8-4 | 6 | 5-11 | 6 | 3-3 | 1 | 20-4 | 1 | 21-6 | 1 | 22-8 | 1 | 23-10 | 1 | 25-0 | 1 | 26-2 | 1 | 26-9 | | | | | | | | | | | | | | 6.01 | 473 |
| 54 | - | - | - | 22-6⅞ | 29-10⅝ | 21-5 | 2-3 | 4 | 29-8 | 24 | 9-0 | 8 | 6-6 | 6 | 3-6 | 1 | 22-10 | 1 | 24-0 | 1 | 25-2 | 1 | 26-4 | 1 | 27-6 | 1 | 28-8 | 1 | 29-10 | 1 | 31-1 | | | | | | | | | | | | 7.23 | 592 |
| 60 | - | - | - | 24-3⅞ | 33-1⅛ | 23-8 | 2-6 | 4 | 33-6 | 25 | 9-10 | 8 | 7-1 | 6 | 3-9 | 1 | 25-1 | 1 | 26-3 | 1 | 27-5 | 1 | 28-7 | 1 | 29-9 | 1 | 31-11 | 1 | 33-1 | 1 | 34-3 | | | | | | | | | | | | 8.67 | 691 |
| 66 | - | - | - | 27-2 | 36-6 | 25-11 | 2-9 | 4 | 36-7 | 27 | 10-10 | 8 | 7-10 | 6 | 4-3 | 1 | 27-7 | 1 | 28-9 | 1 | 29-11 | 1 | 32-2 | 1 | 33-4 | 1 | 34-6 | 1 | 35-8 | 1 | 36-10 | 2 | 37-8 | | | | | | | | | | 11.33 | 853 |
| 72 | - | - | - | 29-6⅞ | 39-6¼ | 28-2 | 3-0 | 4 | 39-6 | 30 | 11-6 | 8 | 8-6 | 6 | 4-7 | 1 | 29-9 | 1 | 31-11 | 1 | 33-1 | 1 | 34-3 | 1 | 35-5 | 1 | 36-7 | 1 | 37-9 | 1 | 38-11 | 1 | 40-0 | 1 | 40-10 | | | | | | | | 13.97 | 993 |
| 84 | 3-0 | 40-8 | 25-8 | 34-2½ | 45-6¾ | 32-8 | 3-6 | 4 | 45-4 | 35 | 12-10 | 10 | 9-9 | 6 | 5-3 | 1 | 35-5 | 1 | 36-7 | 1 | 37-9 | 1 | 38-11 | 1 | 40-1 | 1 | 41-3 | 1 | 42-5 | 1 | 43-7 | 1 | 44-9 | 1 | 45-11 | 2 | 47-0 | | | | | | 18.92 | 1337 |
| 96 | 3-0 | 45-2 | 29-0 | 38-7 | 51-8⅜ | 37-2 | 4-0 | 4 | 50-11 | 39 | 14-3 | 12 | 10-9 | 6 | 5-9 | 1 | 40-0 | 1 | 41-2 | 1 | 42-4 | 1 | 43-6 | 1 | 44-8 | 1 | 45-10 | 1 | 47-0 | 1 | 48-2 | 1 | 49-4 | 1 | 50-6 | 1 | 51-8 | 1 | 52-10 | 1 | 52-11 | | 23.51 | 1642 |
| 108 | 3-0 | 51-2 | 32-4 | 43-3⅞ | 57-11⅛ | 41-8 | 4-6 | 4 | 56-9 | 44 | 15-9 | 12 | 12-0 | 6 | 6-4 | 1 | 44-6 | 1 | 45-8 | 1 | 46-10 | 1 | 48-0 | 1 | 49-2 | 1 | 50-4 | 1 | 51-6 | 1 | 52-8 | 1 | 53-10 | 1 | 55-0 | 1 | 56-2 | 1 | 57-4 | 1 | 58-6 | 1 | 59-2 | 31.54 | 2123 |

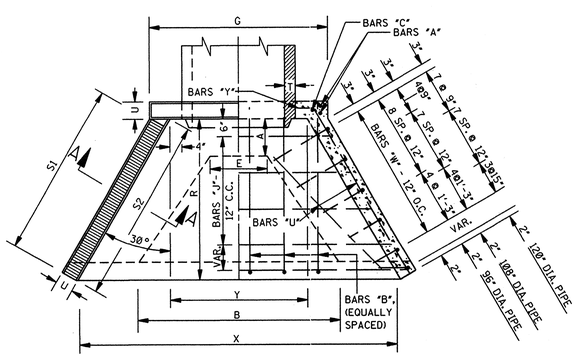


PLAN

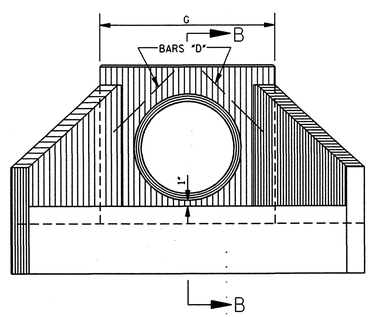


FRONT ELEVATION

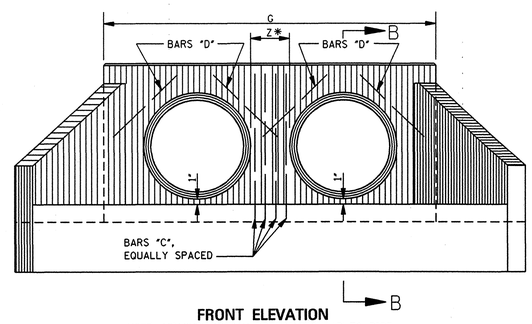


FRONT ELEVATION

*NOTE: MEASURE NORMAL (PERPENDICULAR) TO PIPE.

MISSISSIPPI DEPARTMENT OF TRANSPORTATION
ROADWAY DESIGN DIVISION
STANDARD PLAN

# HEADWALLS FOR CONCRETE PIPE 2:1 SLOPE - 0°- 15°SKEW

| DATE | REVISION | BY |
|---|---|---|
| | | |

ENGLISH

WORKING NUMBER HW-2100

ISSUE DATE: OCTOBER 1, 1998

SHEET NUMBER 340