STATE	PROJECT NO.
MISS.	

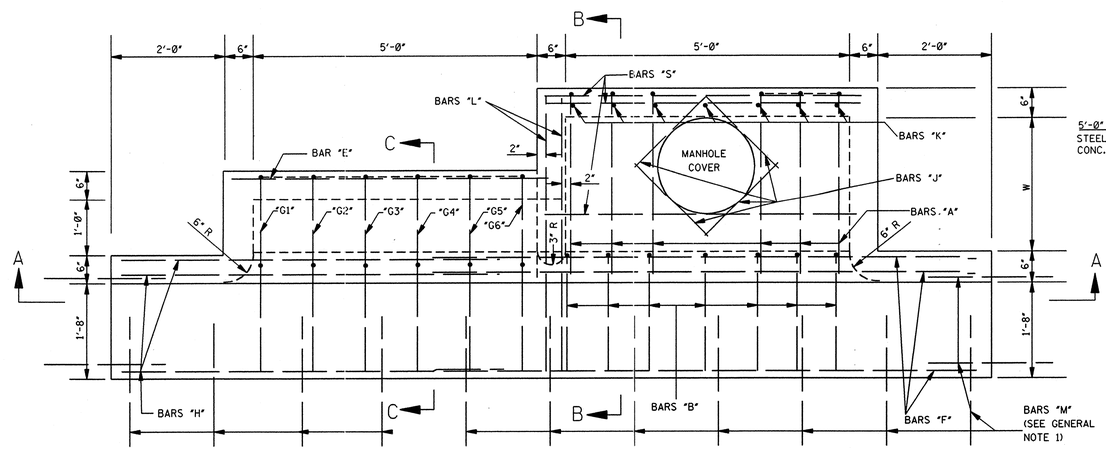

PLAN

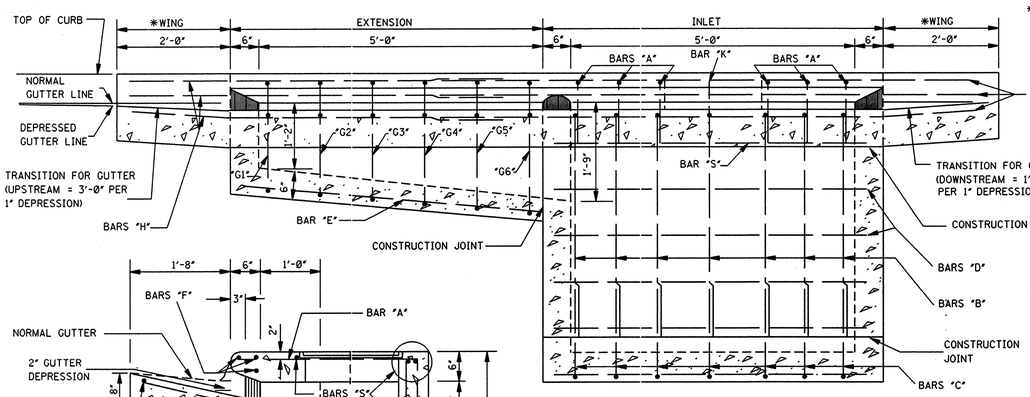

*NOTE: WING QUANTITIES ARE INCLUDED IN INLET QUANTITIES.

SECTION A–A

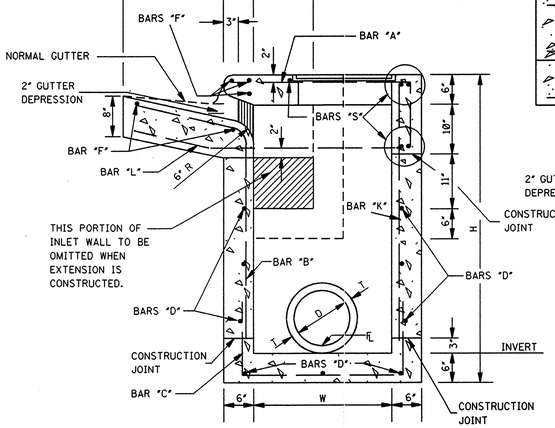

SECTION B–B

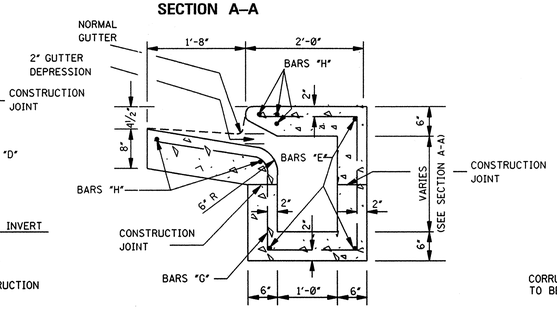

SECTION C–C

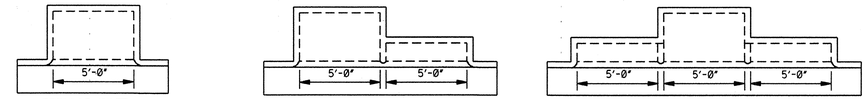

5'-0" INLET
STEEL = 8.68W + 9.35Y + 3.79W' + 7.57H' + 121
CONC. = (WY + 5.5W + 6Y + 14.611)/27

10'-0" INLET
STEEL = 8.68W + 9.35Y + 3.79W' + 7.57H' + 231
CONC. = (WY + 5.5W + 6Y + 38.641)/27

15'-0" INLET
STEEL = 8.68W + 9.35Y +3.79W' + 7.57H' +341
CONC = (WY + 5.5W + 6Y + 62.671)/27

PLAN OF INLET AND EXTENSIONS

NOTES:
1. W AND H ARE EXPRESSED IN DECIMAL FEET.
2. W' = W ROUNDED TO NEAREST WHOLE FOOT.
3. Y = (H-0.5).
4. H'= (H - 2.08) ROUNDED TO NEAREST WHOLE FOOT.
5. NO DEDUCTIONS ARE MADE FOR PIPE OPENINGS IN FORMULAS.

ADD. CONCRETE PER FOOT OF H		ADD. CONCRETE PER FOOT OF W	
W	yd³/ft	H	yd³/ft
2'-6"	0.315	3'-6"	0.315
3'-0"	0.333	4'-0"	0.333
3'-6"	0.352	4'-6"	0.352
4'-0"	0.371	5'-0"	0.370
4'-6"	0.389	5'-6"	0.389
5'-0"	0.408	6'-0"	0.408
5'-6"	0.426	6'-6"	0.426
6'-0"	0.445	7'-0"	0.445
6'-6"	0.463	7'-6"	0.463
7'-0"	0.481	8'-0"	0.482
		8'-6"	0.500

QUANTITIES FOR ONE EXTENSION					
BAR	SIZE	LENGTH	SPACING	NUMBER	†WEIGHT
"E"	#4	5'-8"	AS SHOWN	3	11
"G"	#4	SEE SCHEDULE	0'-11"	6	34
"H"	#6	6'-9"	AS SHOWN	5	51
"L"	#6	4'-9"	AS SHOWN	2	14
TOTAL STEEL FOR ONE EXTENSION = 110 lbs					
TOTAL CONCRETE FOR ONE EXTENSION = 0.89 yd³					

†NOTE: WHERE EXTENSION IS USED WITH CONCRETE PAVEMENT, ADD 27 lbs OF STEEL FOR BARS "M".

BAR "G" SCHEDULE	
BAR "G"	LENGTH
"G1"	7'-10"
"G2"	8'-0"
"G3"	8'-2"
"G4"	8'-5"
"G5"	8'-8"
"G6"	8'-10"

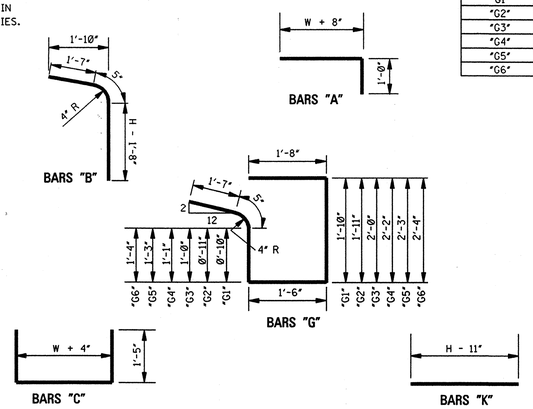

BAR DETAILS

W=2'-6"	BILL OF REINFORCING STEEL FOR 1-5'-0" INLET																		
H	BAR "A" L = 4'-2" #4 @ 9"		BAR "C" L = 5'-8" #4 @ 9"		BAR "S" L = 5'-8" #4 @ 12"		BAR "D" L = 5'-8" #4 @ 12"±		BAR "F" L=9'-8" #6		BAR "J" L=2'-3" #4		BAR "B" #4 @ 9"		BAR "K" #4 @ 9"±		*TOTAL STEEL	TOTAL CONC.
	NO.	lbs	NO.	lbs	NO.	lbs	NO.	lbs	NO.	lbs	NO.	lbs	LGTH.	NO.	LGTH.	NO.	lbs	lbs	yd³
3'-6"	6	17	7	27	5	19	5	19	5	73	4	6	3'-10"	7	18	2'-7"	7	12	190	1.99
4'-0"	6	17	7	27	5	19	7	26	5	73	4	6	4'-4"	7	20	3'-1"	7	14	202	2.15
4'-6"	6	17	7	27	5	19	7	26	5	73	4	6	4'-10"	7	23	3'-7"	7	17	207	2.31
5'-0"	6	17	7	27	5	19	9	34	5	73	4	6	5'-4"	7	25	4'-1"	7	19	219	2.47
5'-6"	6	17	7	27	5	19	9	34	5	73	4	6	5'-10"	7	27	4'-7"	7	21	224	2.62
6'-0"	6	17	7	27	5	19	11	42	5	73	4	6	6'-4"	7	30	5'-1"	7	24	238	2.78
6'-6"	6	17	7	27	5	19	11	42	5	73	4	6	6'-10"	7	32	5'-7"	7	26	240	2.94
7'-0"	6	17	7	27	5	19	13	49	5	73	4	6	7'-4"	7	34	6'-1"	7	28	253	3.10
7'-6"	6	17	7	27	5	19	13	49	5	73	4	6	7'-10"	7	37	6'-7"	7	31	257	3.25

W=3'-0"	BILL OF REINFORCING STEEL FOR 1-5'-0" INLET																		
H	BAR "A" L = 4'-8" #4 @ 9"		BAR "C" L = 6'-2" #4 @ 9"		BAR "S" L = 5'-8" #4 @ 12"		BAR "D" L = 5'-8" #4 @ 12"±		BAR "F" L=9'-8" #6		BAR "J" L=2'-3" #4		BAR "B" #4 @ 9"		BAR "K" #4 @ 9"±		*TOTAL STEEL	TOTAL CONC.
	NO.	lbs	NO.	lbs	NO.	lbs	NO.	lbs	NO.	lbs	NO.	lbs	LGTH.	NO.	LGTH.	NO.	lbs	lbs	yd³
3'-6"	6	19	7	29	5	19	5	19	5	73	4	6	3'-10"	7	18	2'-7"	7	12	194	2.15
4'-0"	6	19	7	29	5	19	7	26	5	73	4	6	4'-4"	7	20	3'-1"	7	14	206	2.32
4'-6"	6	19	7	29	5	19	7	26	5	73	4	6	4'-10"	7	23	3'-7"	7	17	211	2.49
5'-0"	6	19	7	29	5	19	9	34	5	73	4	6	5'-4"	7	25	4'-1"	7	19	223	2.65
5'-6"	6	19	7	29	5	19	9	34	5	73	4	6	5'-10"	7	27	4'-7"	7	21	228	2.82
6'-0"	6	19	7	29	5	19	11	42	5	73	4	6	6'-4"	7	30	5'-1"	7	24	240	2.99
6'-6"	6	19	7	29	5	19	11	42	5	73	4	6	6'-10"	7	32	5'-7"	7	26	245	3.15
7'-0"	6	19	7	29	5	19	13	49	5	73	4	6	7'-4"	7	34	6'-1"	7	28	257	3.32
7'-6"	6	19	7	29	5	19	13	49	5	73	4	6	7'-10"	7	37	6'-7"	7	31	262	3.49

W=3'-6"	BILL OF REINFORCING STEEL FOR 1-5'-0" INLET																		
H	BAR "A" L = 5'-2" #4 @ 9"		BAR "C" L = 6'-8" #4 @ 9"		BAR "S" L = 5'-8" #4 @ 12"		BAR "D" L = 5'-8" #4 @ 12"±		BAR "F" L=9'-8" #6		BAR "J" L=2'-3" #4		BAR "B" #4 @ 9"		BAR "K" #4 @ 9"±		*TOTAL STEEL	TOTAL CONC.
	NO.	lbs	NO.	lbs	NO.	lbs	NO.	lbs	NO.	lbs	NO.	lbs	LGTH.	NO.	LGTH.	NO.	lbs	lbs	yd³
3'-6"	6	21	7	31	5	19	6	23	5	73	4	6	3'-10"	7	18	2'-7"	7	12	202	2.31
4'-0"	6	21	7	31	5	19	8	30	5	73	4	6	4'-4"	7	20	3'-1"	7	14	214	2.49
4'-6"	6	21	7	31	5	19	8	30	5	73	4	6	4'-10"	7	23	3'-7"	7	17	219	2.66
5'-0"	6	21	7	31	5	19	10	38	5	73	4	6	5'-4"	7	25	4'-1"	7	19	231	2.84
5'-6"	6	21	7	31	5	19	10	38	5	73	4	6	5'-10"	7	27	4'-7"	7	21	236	3.01
6'-0"	6	21	7	31	5	19	12	45	5	73	4	6	6'-4"	7	30	5'-1"	7	24	248	3.19
6'-6"	6	21	7	31	5	19	12	45	5	73	4	6	6'-10"	7	32	5'-7"	7	26	253	3.37
7'-0"	6	21	7	31	5	19	14	53	5	73	4	6	7'-4"	7	34	6'-1"	7	28	265	3.54
7'-6"	6	21	7	31	5	19	14	53	5	73	4	6	7'-10"	7	37	6'-7"	7	31	270	3.72

* NOTE: WHERE INLET IS USED WITH CONCRETE PAVEMENT, ADD 73 lbs OF STEEL FOR BARS "M".

GENERAL NOTES:

1. WHERE INLET OR INLET WITH EXTENSION(S) IS USED WITH CONCRETE PAVEMENT WITH INTERGRAL CURB, THE PAVEMENT IS TO BE BLOCKED OUT TO THE DIMENSIONS AS SHOWN FOR THE GUTTER PORTION OF THE INLET OR INLET WITH EXTENSION(S). THE PORTION BLOCKED OUT SHALL BE PLACED INTEGRAL WITH THE TOP OF THE INLET OR INLET WITH EXTENSION(S). #8 DEFORMED BARS 30" LONG SHALL BE PLACED ON 18" CENTERS AT THE CENTER OF THE PAVEMENT. THESE BARS SHALL EXTEND INTO THE GUTTER PORTION OF THE INLET OR INLET WITH EXTENSION(S) 15". THE CONSTRUCTION JOINT BETWEEN THE CONCRETE PAVEMENT AND THE INLET OR INLET WITH EXTENSION(S) SHALL BE A KEYED JOINT AS SHOWN. A SMOOTH CONSTRUCTION JOINT WILL NOT BE PERMITTED. QUANTITIES FOR BLOCKED OUT AREA OF PAVEMENT SHALL BE INCLUDED IN QUANTITIES FOR INLET OR INLET WITH EXTENSION(S).
2. THE STANDARD SPECIFICATIONS ADOPTED BY THE MISSISSIPPI DEPARTMENT OF TRANSPORTATION SHALL APPLY TO ALL ITEMS ON THIS SHEET.
3. THE QUANTITIES SHOWN, MINUS VOLUMETRIC DISPLACEMENT OF CONCRETE BY PIPE CULVERTS THROUGH INLET WALLS, WILL BE USED AS THE BASIS OF FINAL PAYMENT UNLESS THIS PLAN IS MODIFIED.
4. FOR CONVENIENCE, DEPTHS OF INLETS SHOWN IN ABOVE TABLE ARE INCREMENTS OF 6". BUT ANY DEPTHS OTHER THAN THESE SHOWN MAY BE USED WHEREVER DEEMED NECESSARY. QUANTITIES FOR OTHER DEPTHS, FALLING WITHIN THE LIMITS OF THE TABLE, MAY BE FOUND BY INTERPOLATION.
5. FIELD CUT AND BEND BARS AS NECESSARY TO ACCOMMODATE STORM SEWER. NO DEDUCTIONS ARE TO BE MADE IN STEEL QUANTITIES.

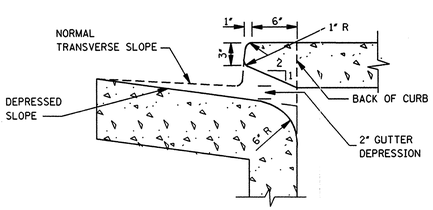

THROAT DETAIL OF BARRIER CURB

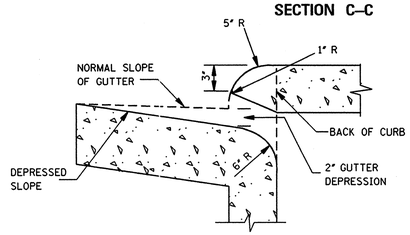

THROAT DETAIL OF ROLLED CURB

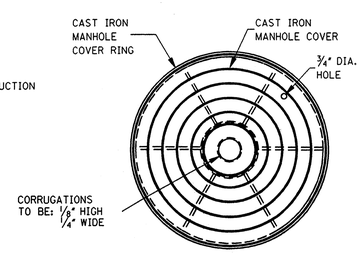

PLAN

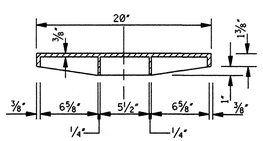

SECTION THRU MANHOLE COVER

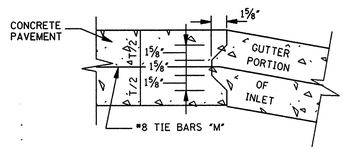

DETAIL OF KEYED CONSTRUCTION JOINTS

NOTE: FIELD BEND BARS "L" TO CENTER OF GUTTER SECTION

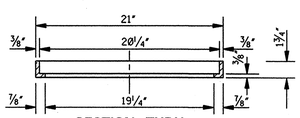

SECTION THRU MANHOLE COVER RING

NOTE: WEIGHT OF RING & COVER = 79 lbs

DATE	REVISION	BY

MISSISSIPPI DEPARTMENT OF TRANSPORTATION
ROADWAY DESIGN DIVISION
STANDARD PLAN

STORM SEWER STRUCTURE TYPE SS-2

DEPARTMENT OF TRANSPORTATION MISSISSIPPI ENGLISH

WORKING NUMBER SS-2

ISSUE DATE: OCTOBER 1, 1998

SHEET NUMBER 322