STATE	PROJECT NO.
MISS.	

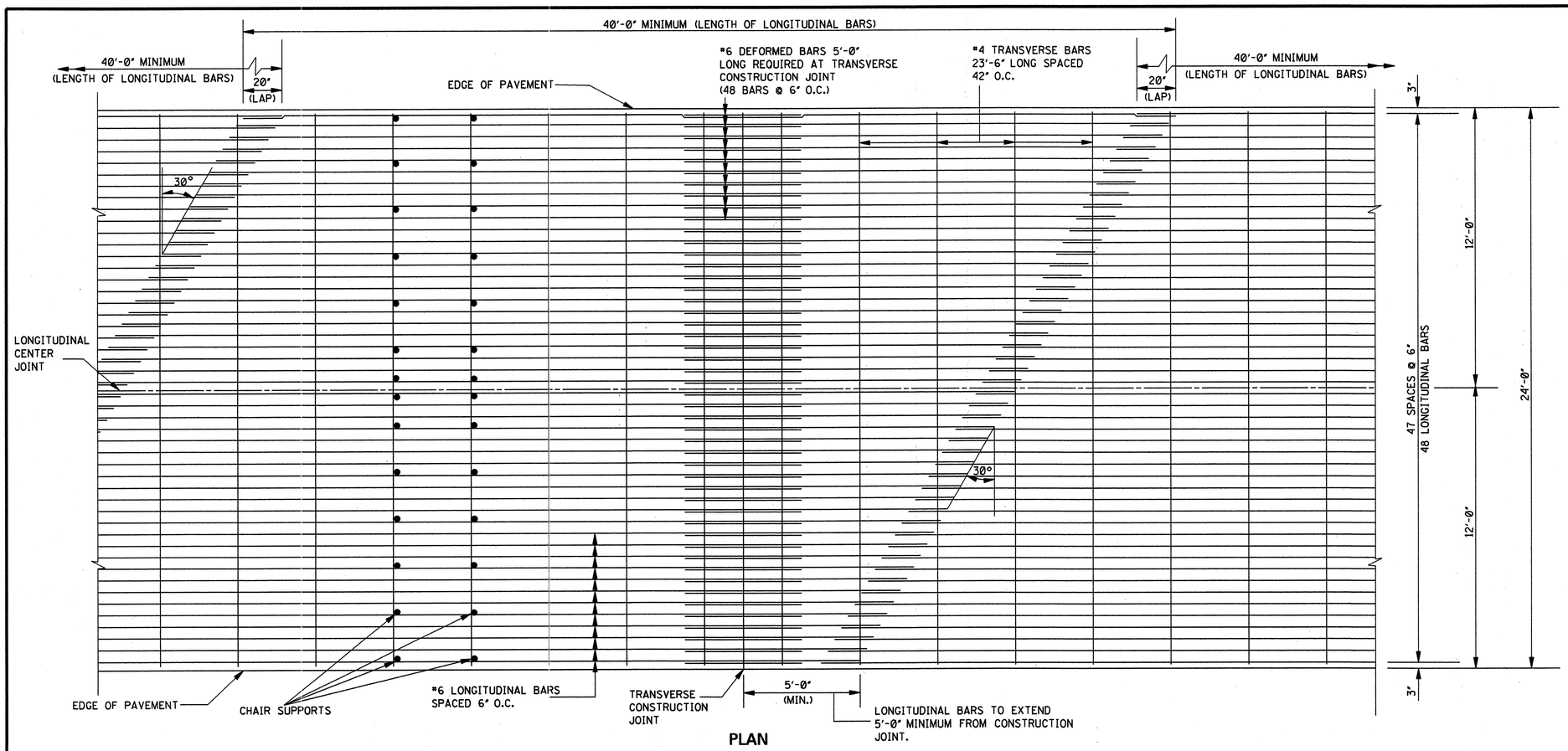

PLAN

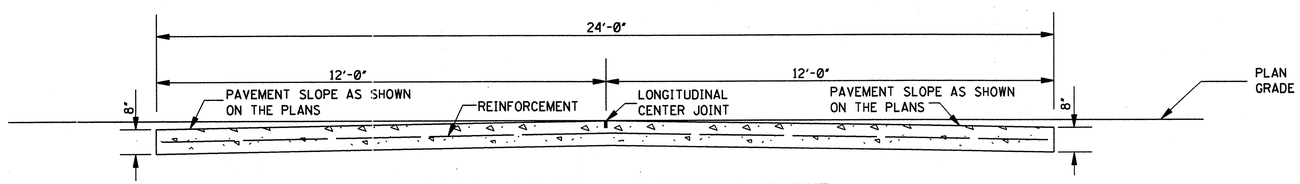

SECTION ACROSS 24'-0" WIDTH PAVEMENT
(8" UNIFORM THICKNESS)

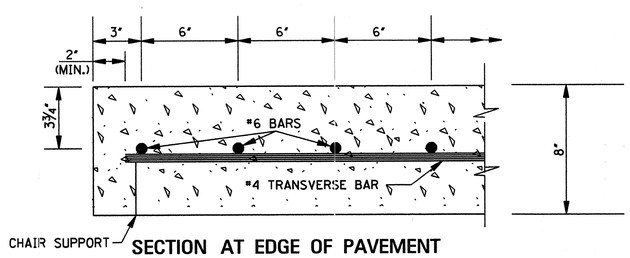

SECTION AT EDGE OF PAVEMENT

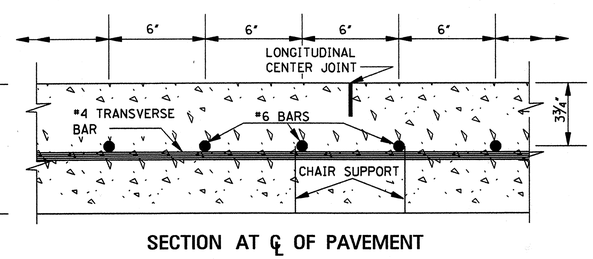

SECTION AT ℄ OF PAVEMENT

NOTE: LONGITUDINAL AND TRANSVERSE BARS SHALL BE SECURELY FASTENED TOGETHER BY ANY SATISFACTORY METHOD AT ALL EXTERIOR INTERSECTIONS AND AT NOT LESS THAN ALTERNATE INTERIOR INTERSECTIONS. WHERE LONGITUDINAL BARS ARE LAPPED, THE BARS SHALL BE DOUBLE FASTENED. THE 5'-0" LONG #6 BARS AT CONSTRUCTION JOINTS SHALL BE DOUBLE FASTENED TO ADJACENT BARS. ANY SATISFACTORY METHOD OR DEVICE FOR HOLDING THE BARS FIRMLY IN POSITION DURING THE PLACEMENT OF THE CONCRETE WILL BE ACCEPTABLE.

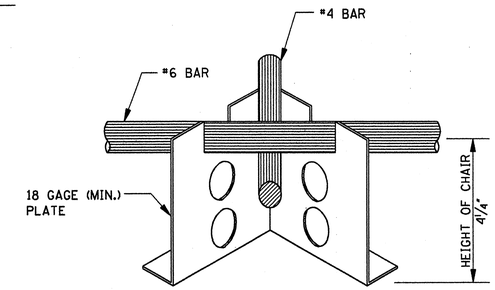

DETAILS OF CHAIR SUPPORT
(OPTION I)

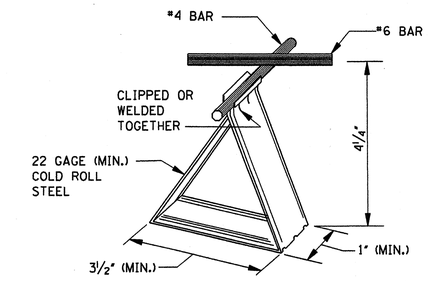

DETAIL OF CHAIR SUPPORT
(OPTION II)

NOTE: FOR USE OF OTHER CHAIR SUPPORTS, SUBMIT DRAWINGS TO THE CONSTRUCTION ENGINEER FOR APPROVAL.

GENERAL NOTES:

1. THE LOT SIZE FOR CONFORMANCE DETERMINATION SHALL BE 1000' OF PAVEMENT IN EACH TRAFFIC LANE. CHAIR SPACINGS SHALL NOT BE GREATER THAN 42" CENTER TO CENTER (LONGITUDINAL) AND 24" (TRANSVERSE). ADDITIONAL CHAIRS SHALL BE USED IF NECESSARY TO MEET THE STEEL PLACEMENT REQUIREMENTS.

DATE	REVISION	BY

MISSISSIPPI DEPARTMENT OF TRANSPORTATION
ROADWAY DESIGN DIVISION
STANDARD PLAN

CONTINUOUSLY REINFORCED CONCRETE PAVEMENT 24'-0" WIDE

ENGLISH

WORKING NUMBER CRP-1

ISSUE DATE: OCTOBER 1, 1998

SHEET NUMBER 101

STATE	PROJECT NO.
MISS.	

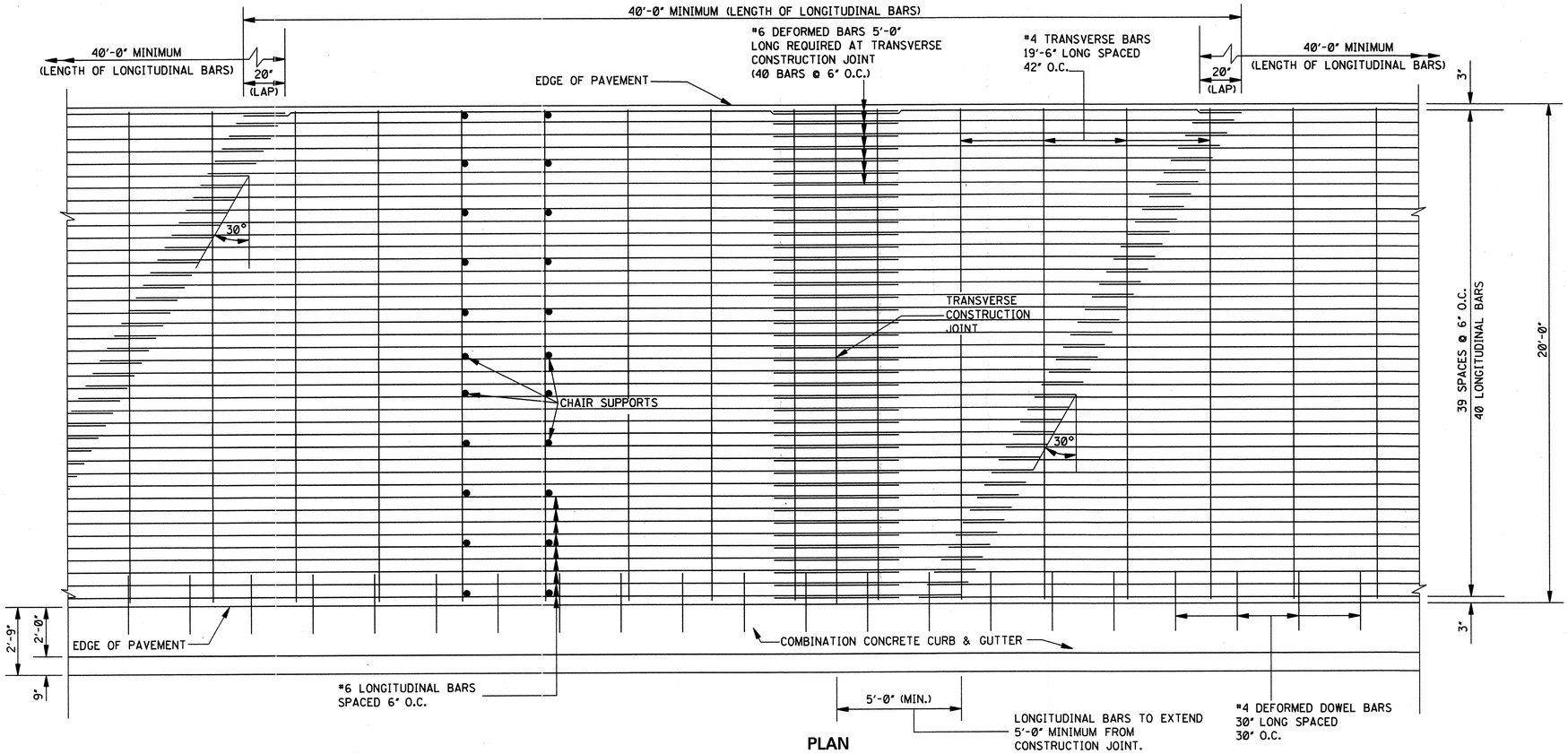

PLAN

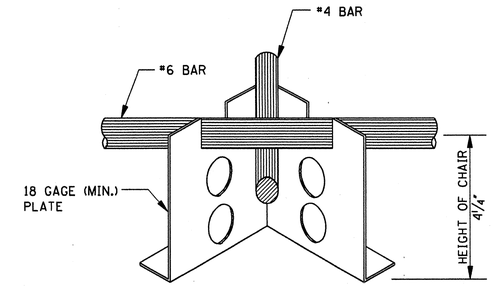

DETAILS OF CHAIR SUPPORT
(OPTION I)

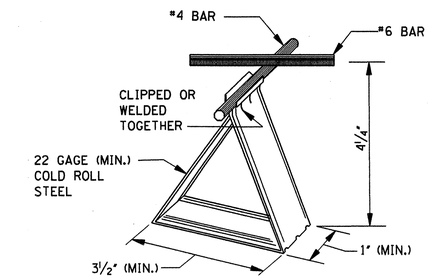

DETAIL OF CHAIR SUPPORT
(OPTION II)

NOTE: FOR USE OF OTHER CHAIR SUPPORTS, SUBMIT DRAWINGS TO THE CONSTRUCTION ENGINEER FOR APPROVAL.

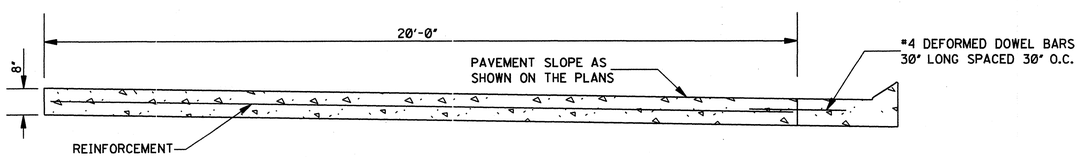

20'-0" PAVEMENT SECTION WITH COMB. CURB & GUTTER
(8" UNIFORM THICKNESS)

GENERAL NOTES:

1. THE LOT SIZE FOR CONFORMANCE DETERMINATION SHALL BE 1000' OF PAVEMENT IN EACH TRAFFIC LANE. CHAIR SPACINGS SHALL NOT BE GREATER THAN 42" CENTER TO CENTER (LONGITUDINAL) AND 24" (TRANSVERSE). ADDITIONAL CHAIRS SHALL BE USED IF NECESSARY TO MEET THE STEEL PLACEMENT REQUIREMENTS.

NOTE: LONGITUDINAL AND TRANSVERSE BARS SHALL BE SECURELY FASTENED TOGETHER BY ANY SATISFACTORY METHOD AT ALL EXTERIOR INTERSECTIONS AND AT NOT LESS THAN ALTERNATE INTERIOR INTERSECTIONS. WHERE LONGITUDINAL BARS ARE LAPPED, THE BARS SHALL BE DOUBLE FASTENED. THE 5'-0" LONG #6 BARS AT CONSTRUCTION JOINTS SHALL BE DOUBLE FASTENED TO ADJACENT BARS. ANY SATISFACTORY METHOD OR DEVICE FOR HOLDING THE BARS FIRMLY IN POSITION DURING THE PLACEMENT OF THE CONCRETE WILL BE ACCEPTABLE.

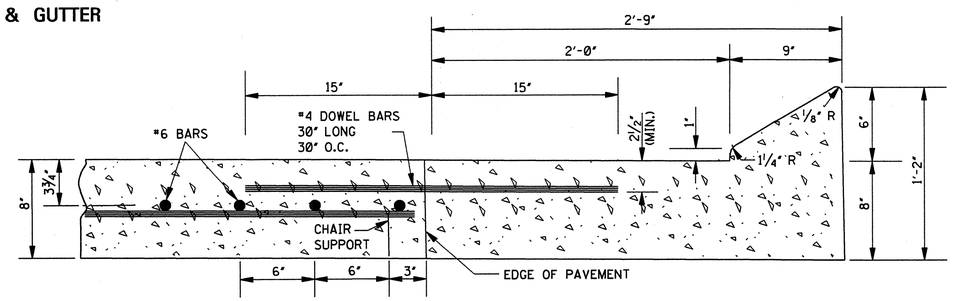

SECTION AT EDGE OF PAVEMENT

DATE	REVISION	BY	MISSISSIPPI DEPARTMENT OF TRANSPORTATION ROADWAY DESIGN DIVISION STANDARD PLAN
			CONTINUOUSLY REINFORCED CONCRETE PAVEMENT 20'-0" WIDE
ISSUE DATE: OCTOBER 1, 1998			WORKING NUMBER CRP-1A SHEET NUMBER 102

STATE	PROJECT NO.
MISS.	

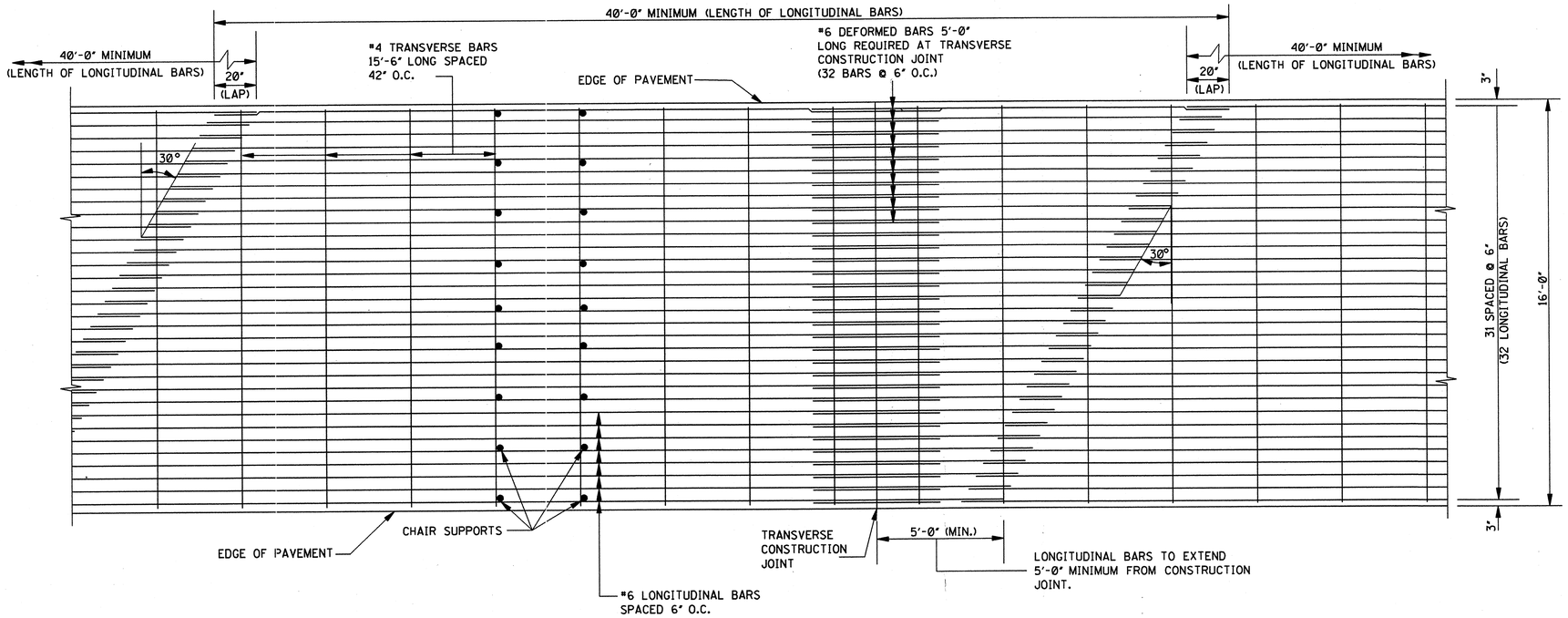

PLAN

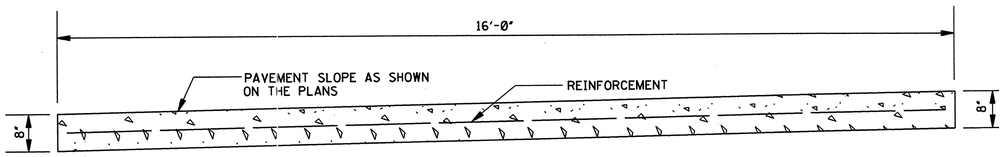

SECTION OF CONTINUOUSLY REINFORCED CONCRETE PAVEMENT
(8" UNIFORM THICKNESS)

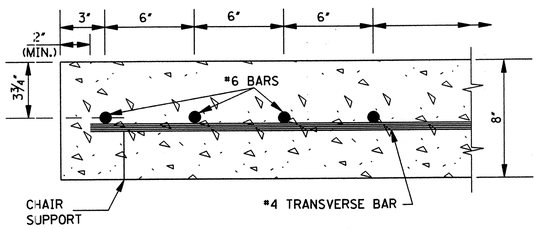

SECTION AT EDGE OF PAVEMENT

NOTE: LONGITUDINAL AND TRANSVERSE BARS SHALL BE SECURELY FASTENED TOGETHER BY ANY SATISFACTORY METHOD AT ALL EXTERIOR INTERSECTIONS AND AT NOT LESS THAN ALTERNATE INTERIOR INTERSECTIONS. WHERE LONGITUDINAL BARS ARE LAPPED, THE BARS SHALL BE DOUBLE FASTENED. THE 5'-0" LONG #6 BARS AT CONSTRUCTION JOINTS SHALL BE DOUBLE FASTENED TO ADJACENT BARS. ANY SATISFACTORY METHOD OR DEVICE FOR HOLDING THE BARS FIRMLY IN POSITION DURING THE PLACEMENT OF THE CONCRETE WILL BE ACCEPTABLE.

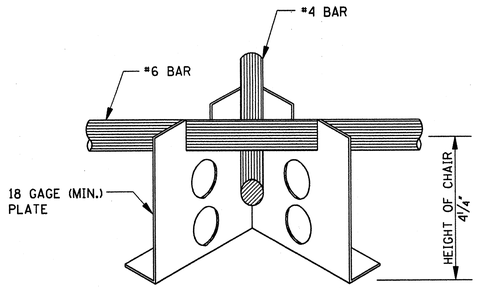

DETAILS OF CHAIR SUPPORT
(OPTION I)

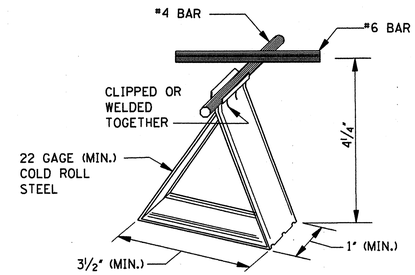

DETAIL OF CHAIR SUPPORT
(OPTION II)

NOTE: FOR USE OF OTHER CHAIR SUPPORTS, SUBMIT DRAWINGS TO THE CONSTRUCTION ENGINEER FOR APPROVAL.

GENERAL NOTES:

1. THE LOT SIZE FOR CONFORMANCE DETERMINATION SHALL BE 1000' OF PAVEMENT IN EACH TRAFFIC LANE. CHAIR SPACINGS SHALL NOT BE GREATER THAN 42" CENTER TO CENTER (LONGITUDINAL) AND 24" (TRANSVERSE). ADDITIONAL CHAIRS SHALL BE USED IF NECESSARY TO MEET THE STEEL PLACEMENT REQUIREMENTS.

DATE	REVISION	BY

MISSISSIPPI DEPARTMENT OF TRANSPORTATION
ROADWAY DESIGN DIVISION
STANDARD PLAN

CONTINUOUSLY REINFORCED CONCRETE PAVEMENT 16'-0" WIDE

ENGLISH

WORKING NUMBER
CRP-1B

ISSUE DATE: OCTOBER 1, 1998

SHEET NUMBER
103

STATE	PROJECT NO.
MISS.	

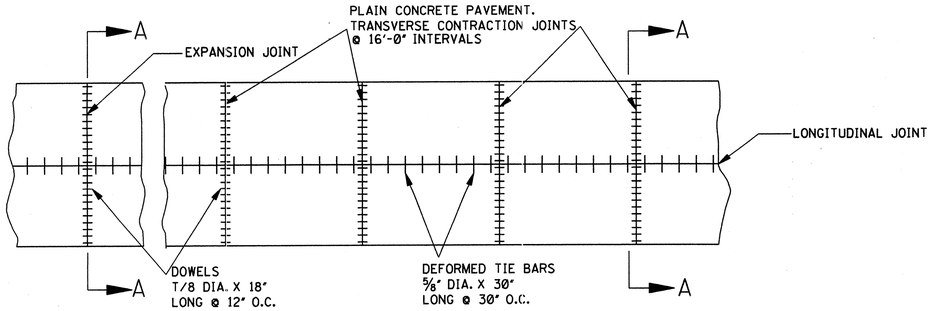

PLAN SHOWING JOINTS

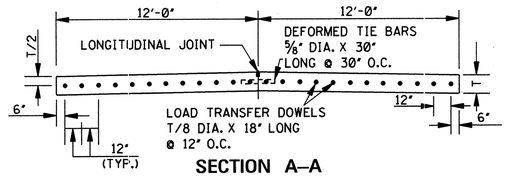

SECTION A–A

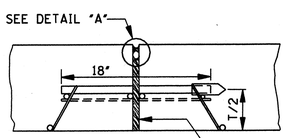

SECTION THRU
EXPANSION JOINT
ASSEMBLY

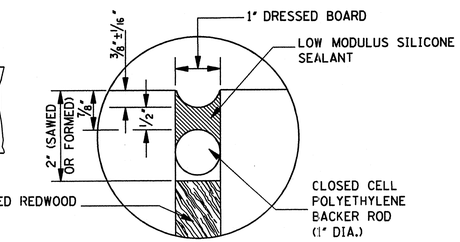

DETAIL "A"

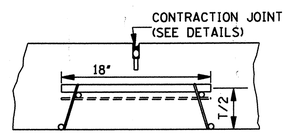

SECTION THRU
CONTRACTION JOINT
ASSEMBLY

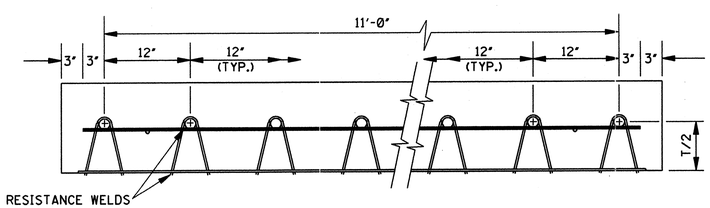

ELEVATION OF LOAD TRANSFER ASSEMBLY

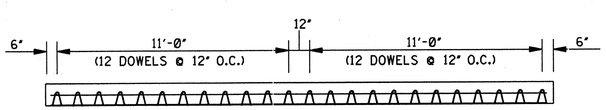

PLACEMENT OF ASSEMBLIES IN 24'–0" WIDTH PAVEMENT

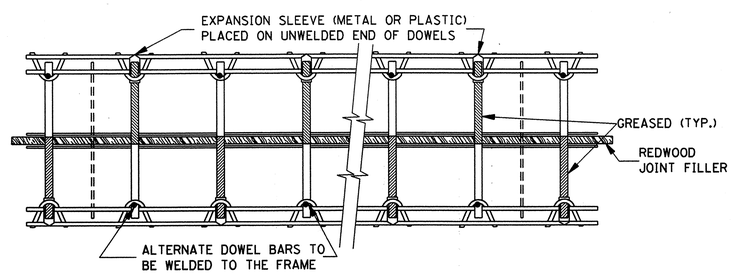

PLAN OF LOAD TRANSFER ASSEMBLY
(EXPANSION JOINT)

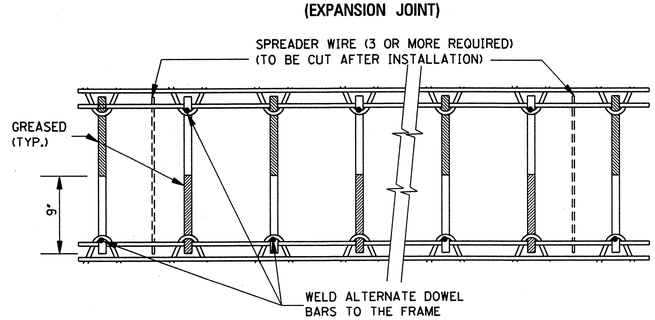

PLAN OF LOAD TRANSFER ASSEMBLY
(CONTRACTION JOINT)

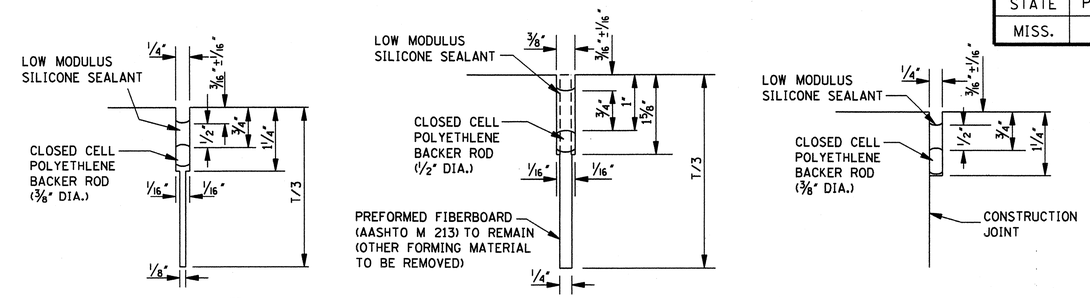

SAWED AND SEALED
OPTION 1

PREFORMED WITH TOP 1 5/8" SAWED AND SEALED
OPTION 2

CONSTRUCTION JOINT
SAWED AND SEALED

LONGITUDINAL JOINTS

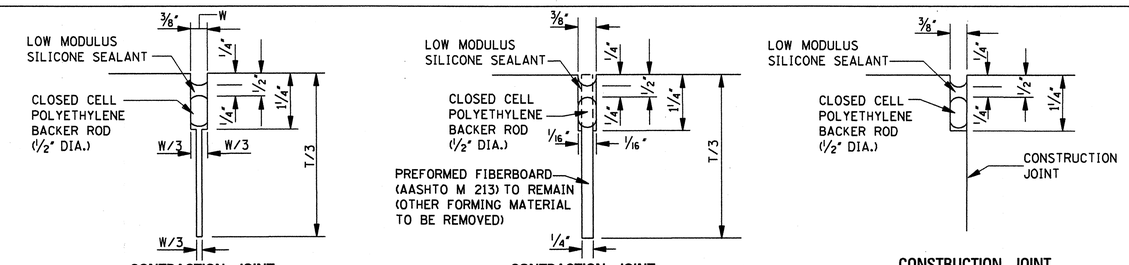

CONTRACTION JOINT
SAWED AND SEALED
OPTION 1

CONTRACTION JOINT
PREFORMED WITH TOP 1 1/4" SAWED AND SEALED
OPTION 2

CONSTRUCTION JOINT
SAWED AND SEALED

TRANSVERSE JOINTS

GENERAL NOTES:

1. DOWEL BAR SPECIFICATIONS: AASHTO M 31 GRADE 60.

   TOLERANCES: THE PERMISSIBLE VARIATION IN STRAIGHTNESS SHALL BE A MAXIMUM OF 0.075" IN THE LENGTH OF THE DOWEL. THE TOLERANCES IN THE LENGTH SHALL BE ± 0.25".

   THE MAXIMUM PERMISSIBLE ALIGNMENT VARIATION SHALL BE 0.25" IN THE LENGTH OF THE DOWEL IN EACH PLANE, BOTH HORIZONTAL AND VERTICAL.

   COATING: DOWELS SHALL BE SHOP PAINTED FULL LENGTH WITH ONE (1) OF THE FOLLOWING PAINTS AS PER SPECIFICATION: (1) FEDERAL SPECIFICATION TT-P-645, (2) FEDERAL SPECIFICATION TT-P-31D, OR (3) STEEL STRUCTURES PAINTING COUNCIL SPECIFICATION SSPC-PAINT II.

2. ASSEMBLY FRAME SPECIFICATIONS: AASHTO M 32.
   FRAME WIRE SIZES: ALL FRAME WIRES SHALL BE W5.5 OR GREATER EXCEPT THE SPREADER WIRES WHICH SHALL BE W3 OR GREATER.

3. ANCHOR PINS: THE ASSEMBLY SHALL BE SECURED TO CEMENT TREATED OR ASPHALT BASE WITH RAMSET OR EQUIVALENT TIES (MINIMUM OF 8 PER 12'-0" SECTION -- 3 ON EACH SIDE) OR OTHER APPROVED METHODS. THE CONTRACTOR SHALL BE RESPONSIBLE FOR SECURING THE ENTIRE ASSEMBLY IN SUCH A MANNER AS TO PREVENT DISPLACEMENT.

4. FOR CONSIDERATION OF USE OF OTHER LOAD TRANSFER ASSEMBLIES, THE CONTRACTOR SHALL PROVIDE DRAWINGS TO THE ENGINEER FOR APPROVAL.

5. PREFORMED FILLER IS NOT AN ALTERNATE FOR REDWOOD FILLER AT EXPANSION JOINTS UNLESS SPECIFICALLY REQUIRED ON THE PLANS.

DATE	REVISION	BY

MISSISSIPPI DEPARTMENT OF TRANSPORTATION
ROADWAY DESIGN DIVISION
STANDARD PLAN

CONCRETE PAVEMENT JOINTS

ENGLISH

WORKING NUMBER
PJ-1

ISSUE DATE: OCTOBER 1, 1998

SHEET NUMBER
104

STATE	PROJECT NO.
MISS.	

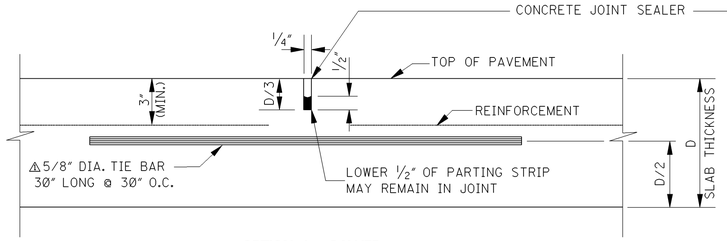

OPTION I – SAWED

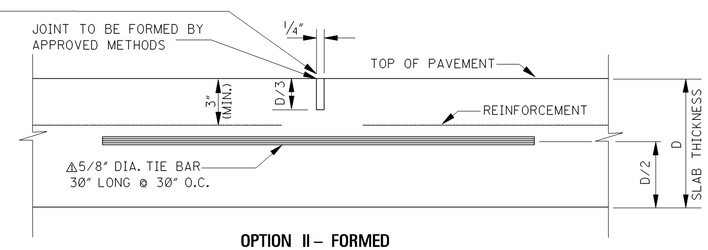

OPTION II – FORMED

DETAILS OF LONGITUDINAL JOINTS FOR CONVENTIONALLY REINFORCED CONCRETE PAVEMENT

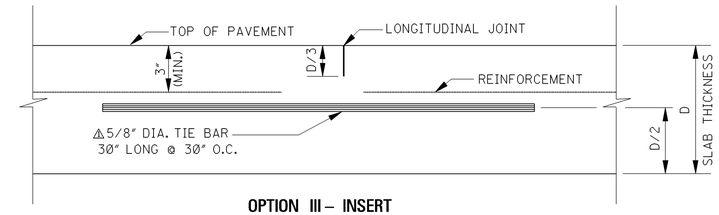

OPTION III – INSERT

NOTE: A LONGITUDINAL WEAKENED PLANE JOINT MAY BE FORMED BY PLACEMENT OF A CONTINUOUS STRIP OF POLYETHYLENE OR OTHER APPROVED MATERIAL. WITH THIS TYPE OF INSERT IT IS NOT REQUIRED TO SAW OR SEAL THE LONGITUDINAL JOINT.

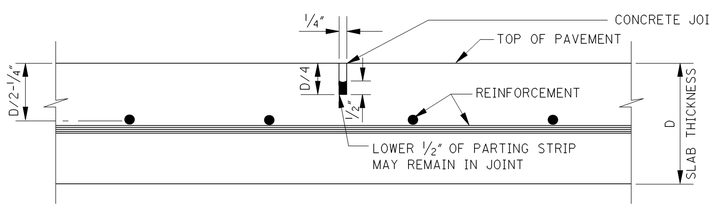

OPTION I – SAWED

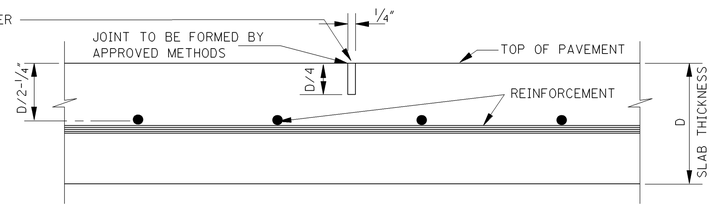

OPTION II – FORMED

DETAILS OF LONGITUDINAL JOINTS FOR CONTINUOUSLY REINFORCED CONCRETE PAVEMENT

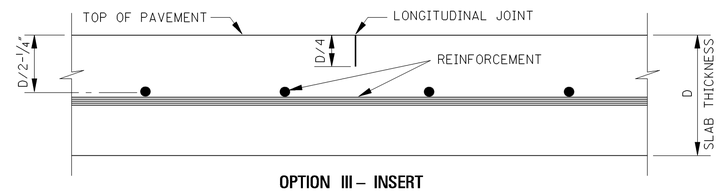

OPTION III – INSERT

NOTE: A LONGITUDINAL WEAKENED PLANE JOINT MAY BE FORMED BY PLACEMENT OF A CONTINUOUS STRIP OF POLYETHYLENE OR OTHER APPROVED MATERIAL. WITH THIS TYPE OF INSERT IT IS NOT REQUIRED TO SAW OR SEAL THE LONGITUDINAL JOINT.

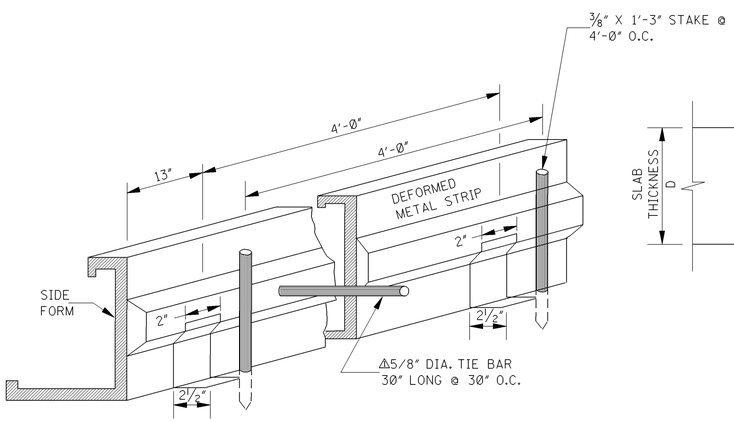

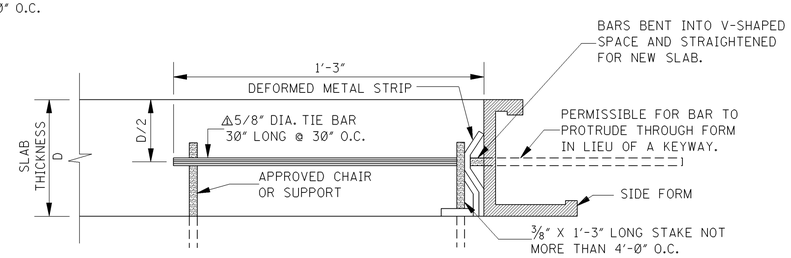

LONGITUDINAL CONSTRUCTION JOINT

NOTE: FOR CONSIDERATION OF OTHER TYPES OF FORMS, THE CONTRACTOR SHALL SUBMIT DRAWINGS TO THE ENGINEER FOR APPROVAL.

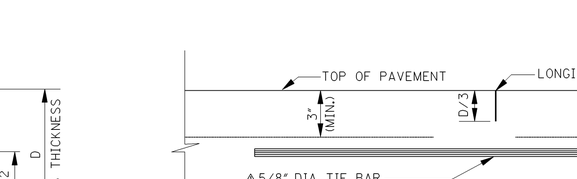

NOTE: PLACE FORM BOARD, INSERT AND VIBRATE TIE BARS IMMEDIATELY FOLLOWING THE TRAILING FORM OF A SLIP-FORM PAVER. REMOVE BOARD AFTER PLACEMENT OF TIE BARS.

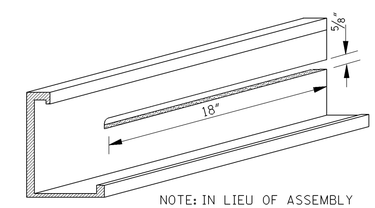

NOTE: IN LIEU OF ASSEMBLY SHOWN AT LEFT, THE LAST 18" OF TRAILING FORMS MAY BE SLOTTED AS SHOWN.

LONGITUDINAL CONSTRUCTION JOINT FOR SLIP FORM PAVEMENT

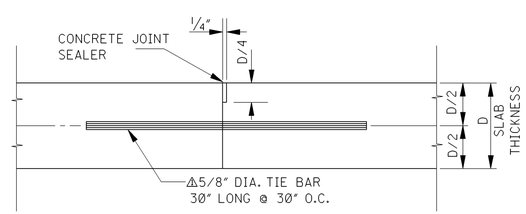

LONGITUDINAL CONSTRUCTION JOINT

JOINT MAY BE FORMED OR TOOLED BY AN APPROVED METHOD; OR FORMED WITH A PARTING STRIP AND SAWED TO A DEPTH OF (D/4 - 1/2"); OR SAWED TO A DEPTH OF 1/2" WITHOUT THE INSERTION OF PARTING STRIP.

DATE	REVISION	BY
3-01-02	REVISE SIZE OF TIE BAR	S.W.R.

MISSISSIPPI DEPARTMENT OF TRANSPORTATION
ROADWAY DESIGN DIVISION
STANDARD PLAN

CONCRETE PAVEMENT JOINTS
(LONGITUDINAL)

ENGLISH

WORKING NUMBER PJ-2

ISSUE DATE: OCTOBER 1, 1998

SHEET NUMBER 105

STATE	PROJECT NO.
MISS.	

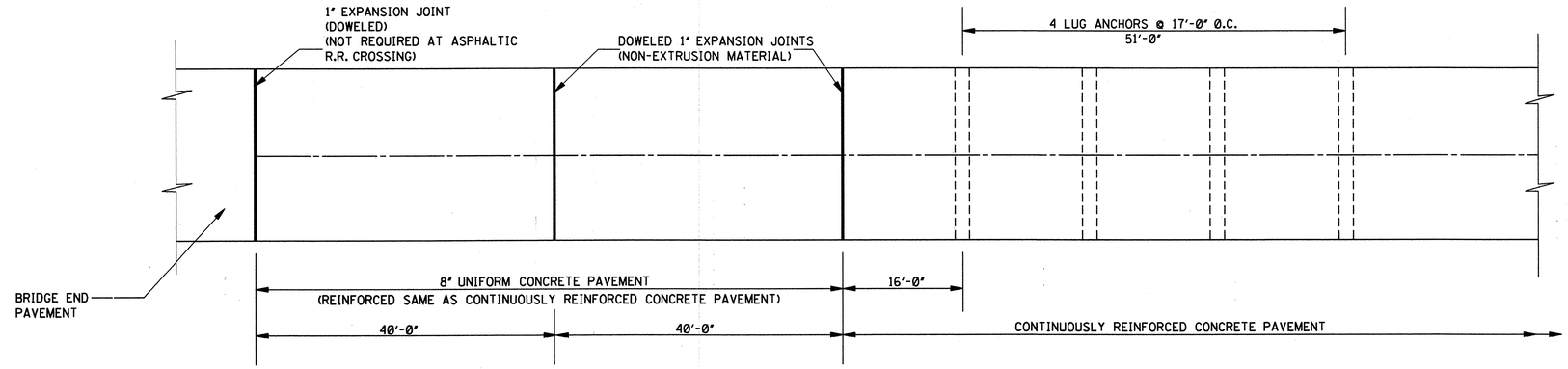

PLAN OF EXPANSION JOINTS AND CONCRETE LUG ANCHORS ADJACENT TO BRIDGE END PAVEMENT

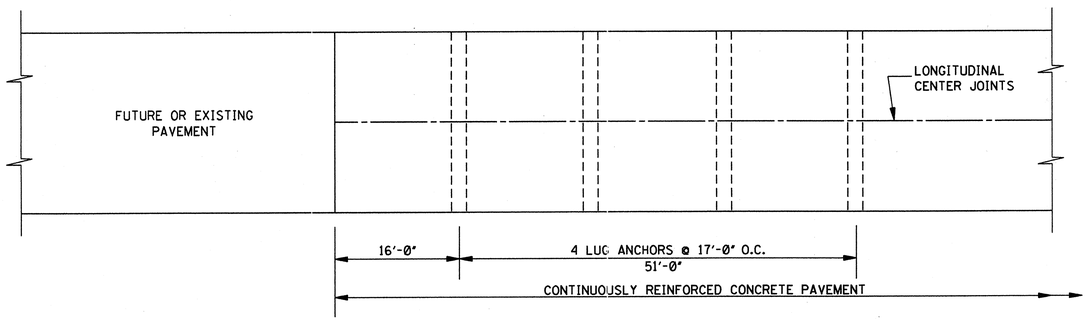

PLAN OF CONCRETE LUG ANCHORS AT ENDS OF PAVEMENT

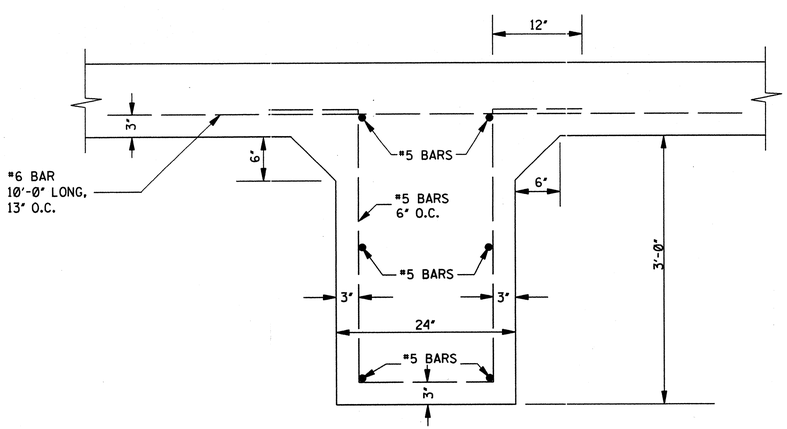

DETAIL OF LUG

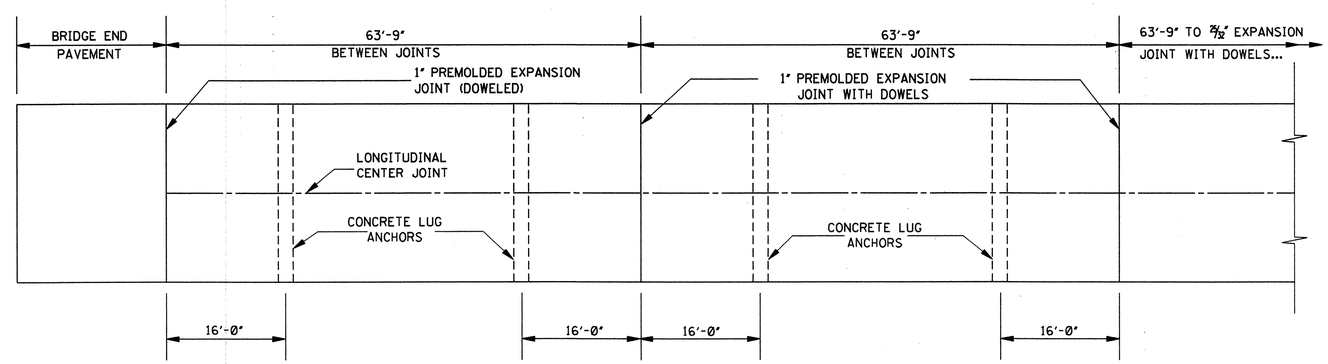

PLAN OF EXPANSION JOINTS AND CONCRETE LUG ANCHORS ADJACENT TO BRIDGE END PAVEMENT
FOR CONVENTIONALLY REINFORCED CONCRETE PAVEMENT

GENERAL NOTE:

1. LUG ANCHORS TO BE MONOLITHIC WITH PAVEMENT.
   IN SPECIAL CASES, THE LUG ANCHORS MAY BE OMITTED.
   SEE PLAN-PROFILE SHEETS FOR LUG ANCHOR LOCATIONS.

DATE	REVISION	BY

MISSISSIPPI DEPARTMENT OF TRANSPORTATION
ROADWAY DESIGN DIVISION
STANDARD PLAN

CONCRETE LUG ANCHORS

ENGLISH

WORKING NUMBER
LA-1

ISSUE DATE: OCTOBER 1, 1998

SHEET NUMBER
106

STATE	PROJECT NO.
MISS.	

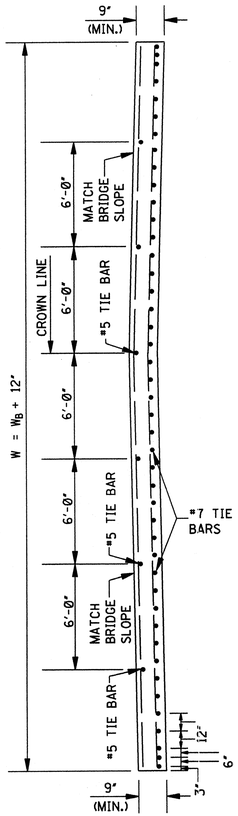

SECTION B–B

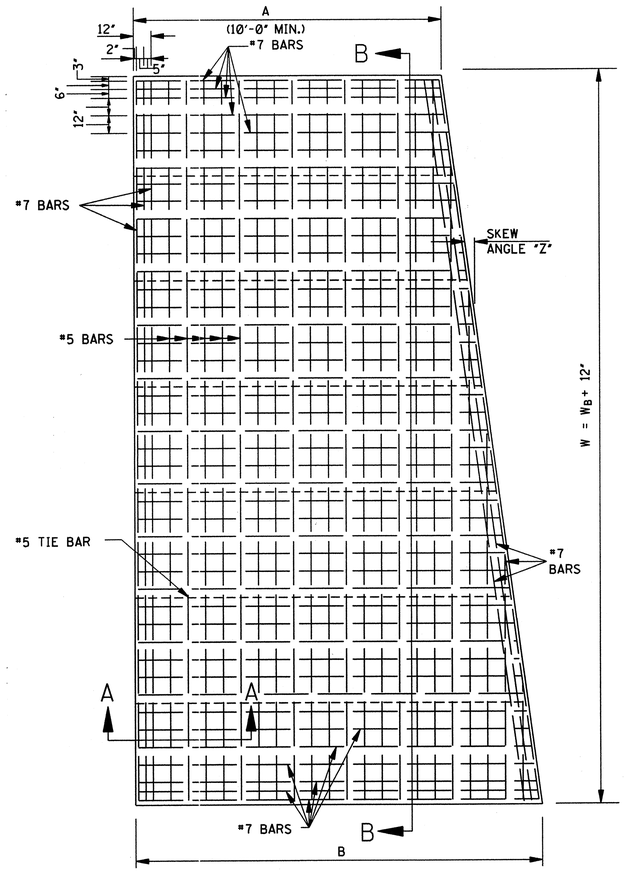

PLAN

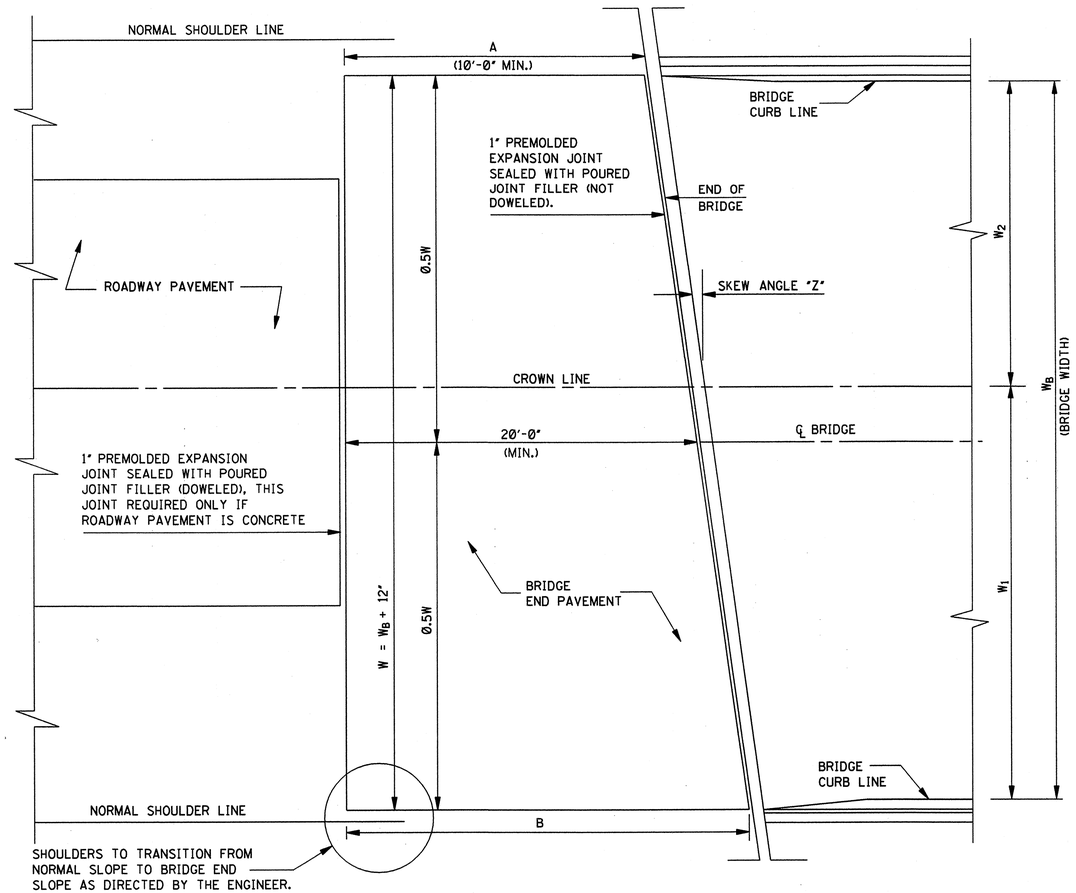

PLAN AT BRIDGE END

GENERAL NOTES:

1. IF BRIDGE END PAVEMENT IS CONSTRUCTED IN MORE THAN ONE SECTION, LONGITUDINAL CONSTRUCTION JOINTS WITH TIE BARS WILL BE USED. TIE BARS WILL BE #5 BARS, 30" LONG AND SPACED 30" O.C. SUCH CONSTRUCTION WILL BE USED WHERE INDICATED ON PLANS.
2. DIMENSIONS "A" & "B" ARE BASED ON A MID-LENGTH OF 20'-0". EXCEPT IN NO CASE SHALL "A" BE LESS THAN 10'-0".
3. SEE QUANTITY SECTION OF PLANS FOR DIMENSIONS "W", "W_1", "W_2", "A", "B", SKEW ANGLE "Z" AND QUANTITIES.
4. SPACING OF OUTER LONGITUDINAL EDGE BARS AND TIE BARS MAY BE ADJUSTED TO MEET VARIOUS WIDTHS ("W") OF BRIDGE END PAVEMENT. SPACINGS SHOWN ARE FOR A BRIDGE WIDTH OF 40'-0".
5. REINFORCEMENT (DEFORMED) MAY BE FURNISHED FULL LENGTH OR MAY BE LAPPED. IF BARS ARE LAPPED THEY SHALL BE LAPPED NOT LESS THAN 30 DIAMETERS.

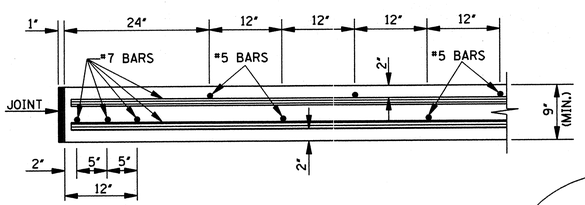

SECTION A–A

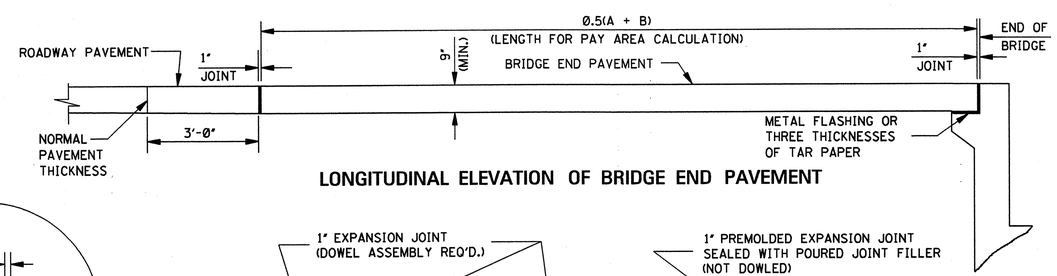

LONGITUDINAL ELEVATION OF BRIDGE END PAVEMENT

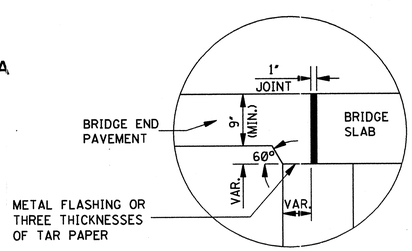

DETAIL SHOWING METHOD OF SEATING BRIDGE END PAVEMENT ON BRIDGES WITH NO PAVING BRACKET

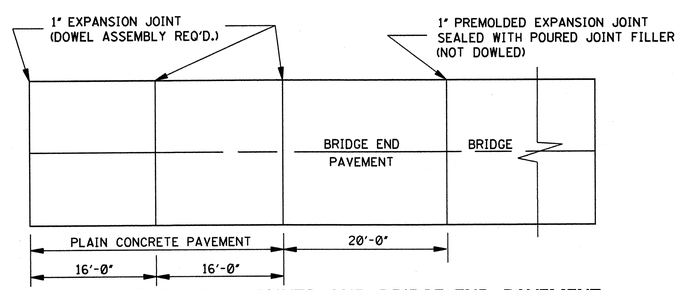

PLAN OF EXPANSION JOINTS AND BRIDGE END PAVEMENT

DATE	REVISION	BY

MISSISSIPPI DEPARTMENT OF TRANSPORTATION
ROADWAY DESIGN DIVISION
STANDARD PLAN

BRIDGE END PAVEMENT

ENGLISH

WORKING NUMBER BE-1

ISSUE DATE: OCTOBER 1, 1998

SHEET NUMBER 107

STATE	PROJECT NO.
MISS.	

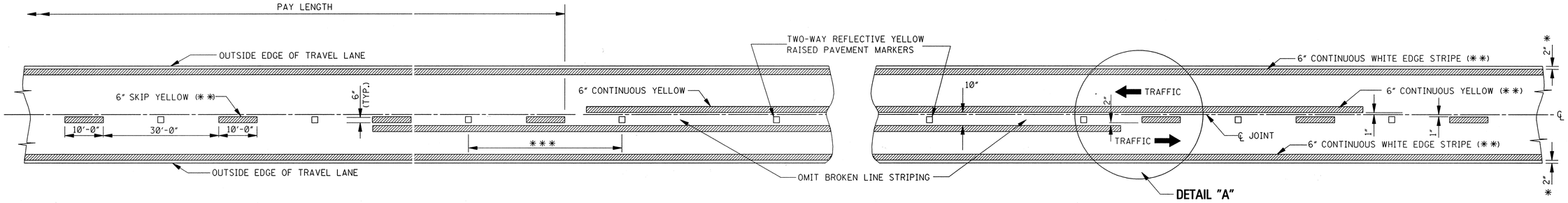

TWO–WAY TRAFFIC
(ASPHALT OR CONCRETE PAVEMENT)

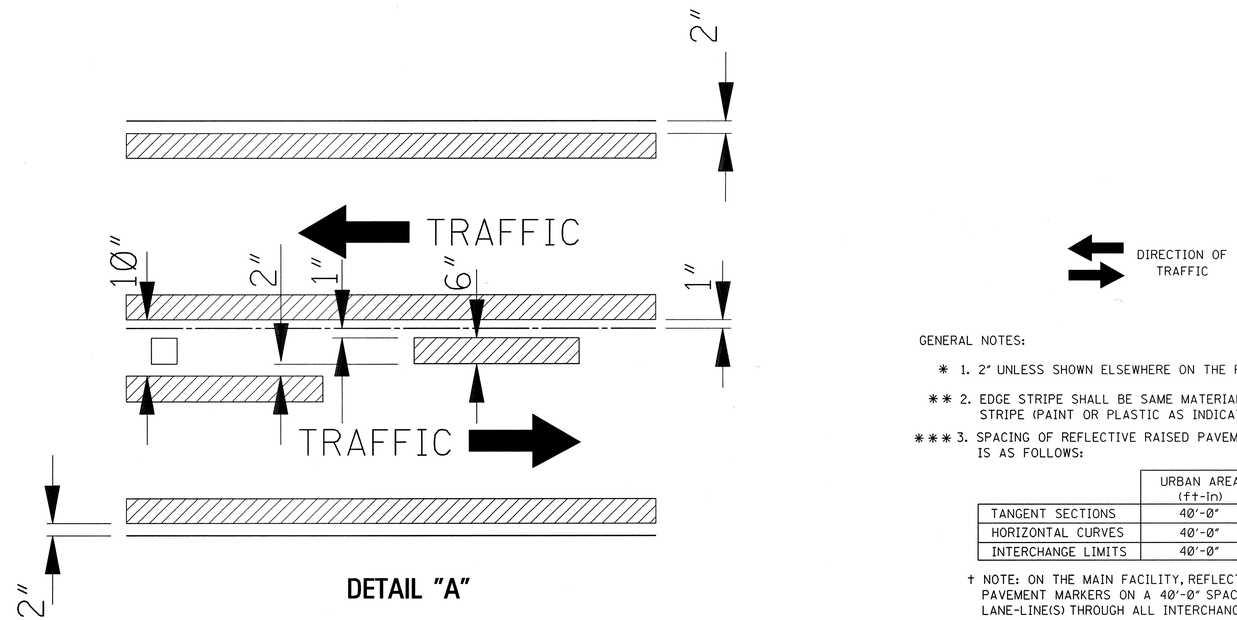

DETAIL "A"

GENERAL NOTES:

* 1. 2" UNLESS SHOWN ELSEWHERE ON THE PLANS.

** 2. EDGE STRIPE SHALL BE SAME MATERIAL AS LANE-LINE STRIPE (PAINT OR PLASTIC AS INDICATED IN PAY ITEMS).

*** 3. SPACING OF REFLECTIVE RAISED PAVEMENT MARKERS IS AS FOLLOWS:

	URBAN AREA (ft-in)	RURAL AREA (ft-in)
TANGENT SECTIONS	40'-0"	80'-0"
HORIZONTAL CURVES	40'-0"	40'-0"
INTERCHANGE LIMITS	40'-0"	† 40'-0"

† NOTE: ON THE MAIN FACILITY, REFLECTIVE RED-CLEAR RAISED PAVEMENT MARKERS ON A 40'-0" SPACING WILL BE REQUIRED ON LANE-LINE(S) THROUGH ALL INTERCHANGE AREAS BEGINNING 1000' IN ADVANCE (IN DIRECTION OF TRAFFIC) OF THE EXIT RAMP TAPER AND CONTINUING THROUGH THE INTERCHANGE TO THE END OF THE ENTRANCE RAMP TAPER.

4. PAVEMENT MARKERS SHALL BE HIGH PERFORMANCE REFLECTIVE RAISED PAVEMENT MARKERS AS LISTED IN THE MDOT "APPROVED SOURCES OF MATERIALS."

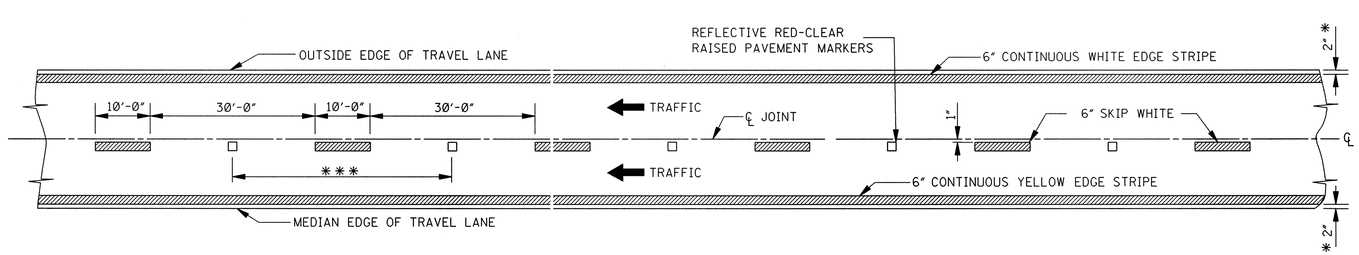

4–LANE WITH ONE–WAY TRAFFIC

DATE	REVISION	BY
12-1-99	REVISE STRIPE WIDTH	S.W.R.

MISSISSIPPI DEPARTMENT OF TRANSPORTATION
ROADWAY DESIGN DIVISION
STANDARD PLAN

PAVEMENT MARKING DETAILS FOR 2–LANE AND 4–LANE DIVIDED HIGHWAYS

ENGLISH

WORKING NUMBER PM-1

ISSUE DATE: OCTOBER 1, 1998

SHEET NUMBER 120

STATE	PROJECT NO.
MISS.	

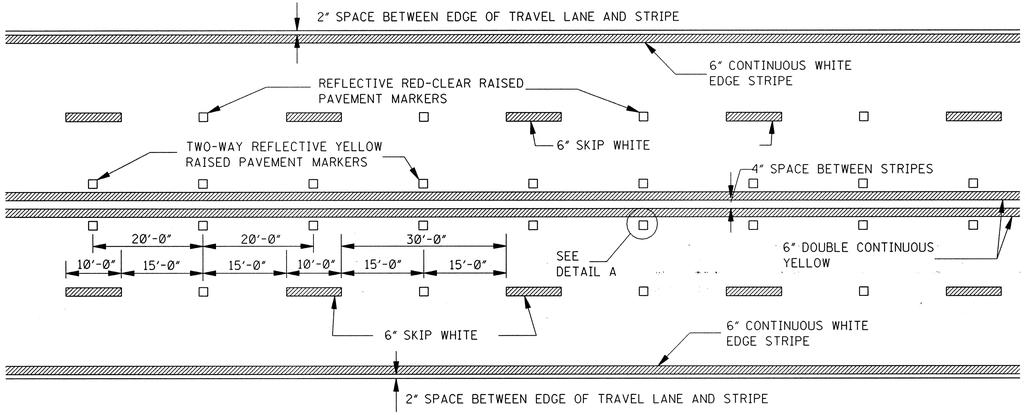

TYPICAL STRIPING AND RAISED PAVEMENT MARKERS FOR 4–LANE SECTION

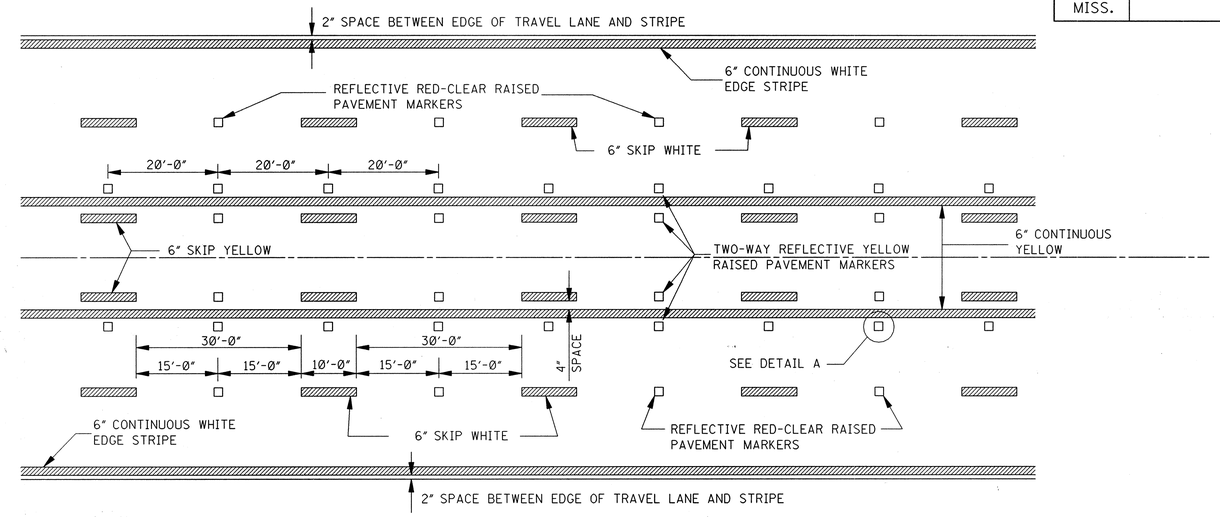

TYPICAL STRIPING AND RAISED PAVEMENT MARKERS FOR 5–LANE SECTION

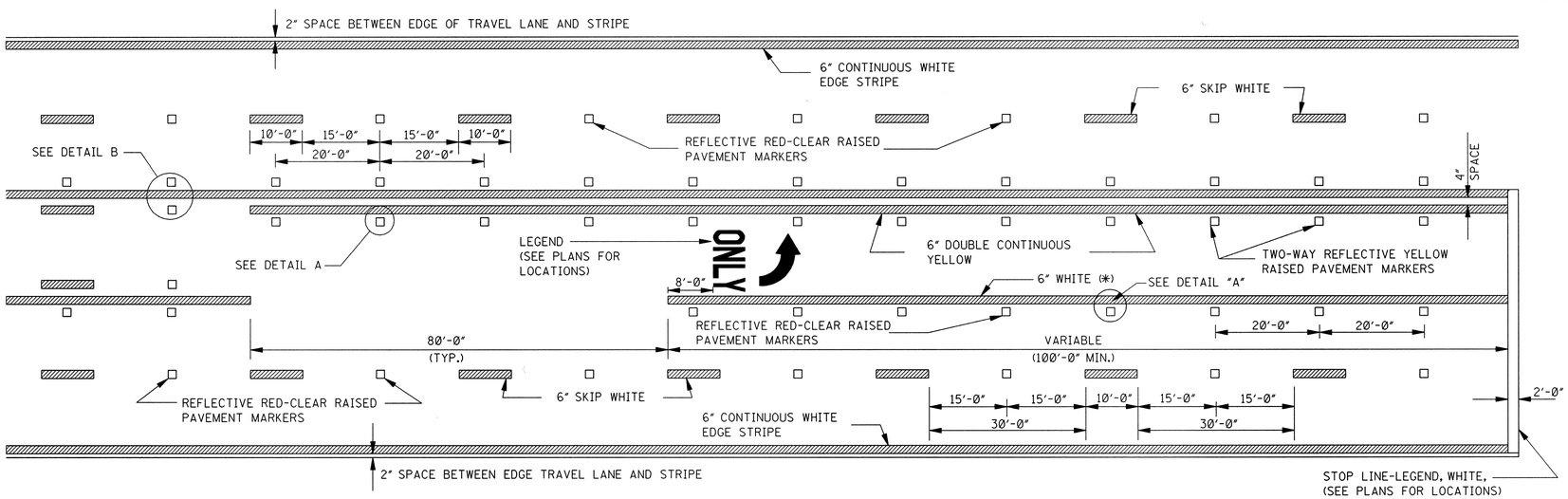

TYPICAL STRIPING AND RAISED PAVEMENT MARKERS AT LEFT TURN LANES

*NOTE: USE DETAIL STRIPING IF LENGTH ≤ 150' AT THIS LOCATION, OTHERWISE USE CONTINUOUS STRIPING,

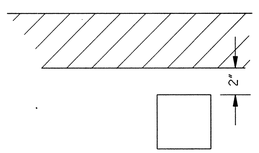

DETAIL A
LATERAL PLACEMENT OF PAVEMENT MARKERS

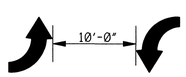

TYPICAL TWO–WAY ARROW INSTALLATION

NOTES: 1. CONSIDER EACH SEGMENT OF CONTINUOUS TWO-WAY LEFT TURN LANE SEPARATELY.
2. IF SEGMENT IS LESS THAN 350', PLACE ONE SET OF ARROWS IN CENTER OF SEGMENT.
3. IF SEGMENT IS GREATER THAN 350', PLACE FIRST SET OF ARROWS 50' TO 100'. FROM BEGINNING AND/OR END OF SEGMENT AND SPACE ADDITIONAL SETS OF ARROWS (250' O.C.).

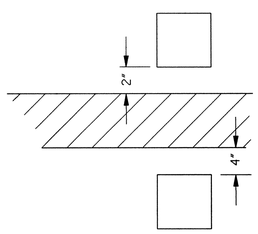

DETAIL B
LATERAL PLACEMENT OF PAVEMENT MARKERS

GENERAL NOTE:

1. PAVEMENT MARKERS SHALL BE HIGH PERFORMANCE RAISED PAVEMENT MARKERS AS LISTED IN THE MDOT "APPROVED SOURCES OF MATERIALS".

DATE	REVISION	BY
12-1-99	REVISE STRIPE WIDTH	S.W.R.

MISSISSIPPI DEPARTMENT OF TRANSPORTATION
ROADWAY DESIGN DIVISION
STANDARD PLAN

PAVEMENT MARKING DETAILS FOR 4–LANE AND 5–LANE UNDIVIDED ROADWAYS

ENGLISH

WORKING NUMBER PM-2

ISSUE DATE: OCTOBER 1, 1998

SHEET NUMBER 121

STATE	PROJECT NO.
MISS.	

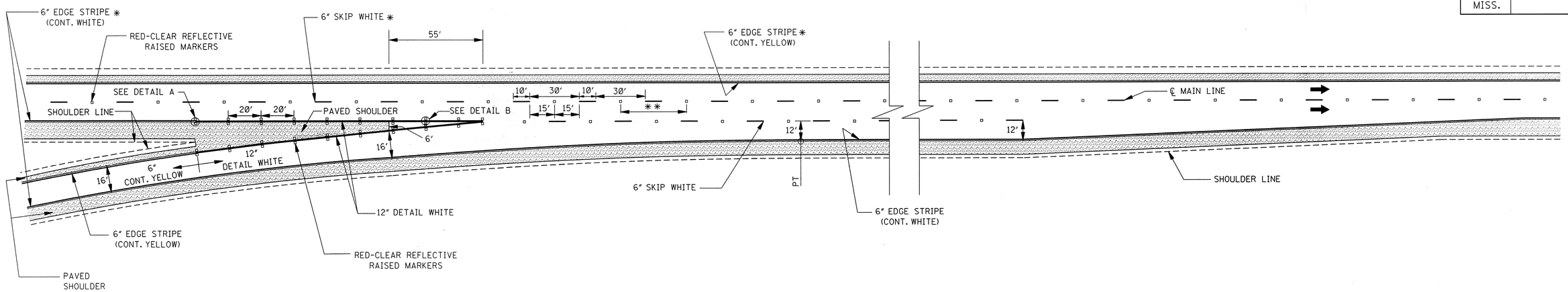

PARALLEL ENTRANCE RAMP

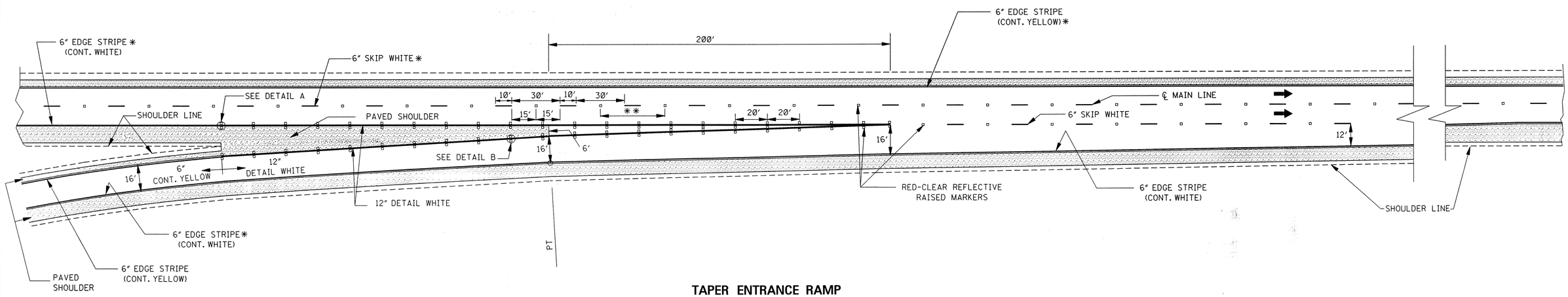

TAPER ENTRANCE RAMP

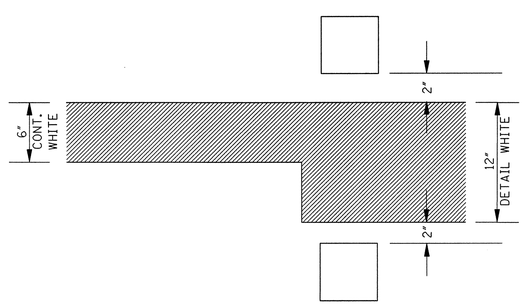

DETAIL A

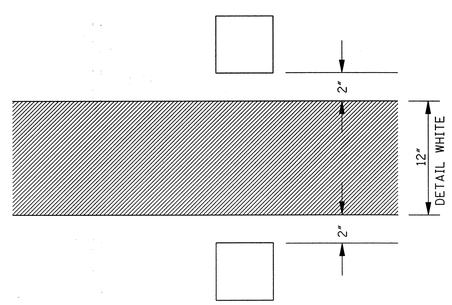

DETAIL B

GENERAL NOTES:

✱ 1. SEE SHEET PM-1 FOR THE PLACEMENT OF LANE-LINE STRIPE WITH RESPECT TO THE PAVEMENT JOINT AND FOR THE PLACEMENT OF THE EDGE LINE WITH RESPECT TO THE OUTSIDE EDGE OF THE TRAVELED WAY.

✱✱ 2. ON THE MAIN FACILITY, PLACE REFLECTIVE RED-CLEAR RAISED PAVEMENT MARKERS AT A 40' SPACING ON ALL LANE-LINE(S) THROUGHOUT THE INTERCHANGE AREA BEGINNING 1000' IN ADVANCE (IN DIRECTION OF TRAFFIC) OF THE EXIT RAMP TAPER AND CONTINUING THROUGH THE INTERCHANGE TO THE END OF THE ENTRANCE RAMP TAPER.

3. PAVEMENT MARKERS SHALL BE HIGH PERFORMANCE REFLECTIVE RAISED PAVEMENT MARKERS AS LISTED IN THE MDOT "APPROVED SOURCES OF MATERIALS."

DATE	REVISION	BY
12-1-99	REVISE STRIPE WIDTH	S.W.R.

MISSISSIPPI DEPARTMENT OF TRANSPORTATION
ROADWAY DESIGN DIVISION
STANDARD PLAN

PAVEMENT MARKING DETAILS FOR INTERCHANGE ENTRANCE RAMPS (PARALLEL AND TAPER)

ISSUE DATE: OCTOBER 1, 1998

ENGLISH

WORKING NUMBER PM-3

SHEET NUMBER 122

STATE	PROJECT NO.
MISS.	

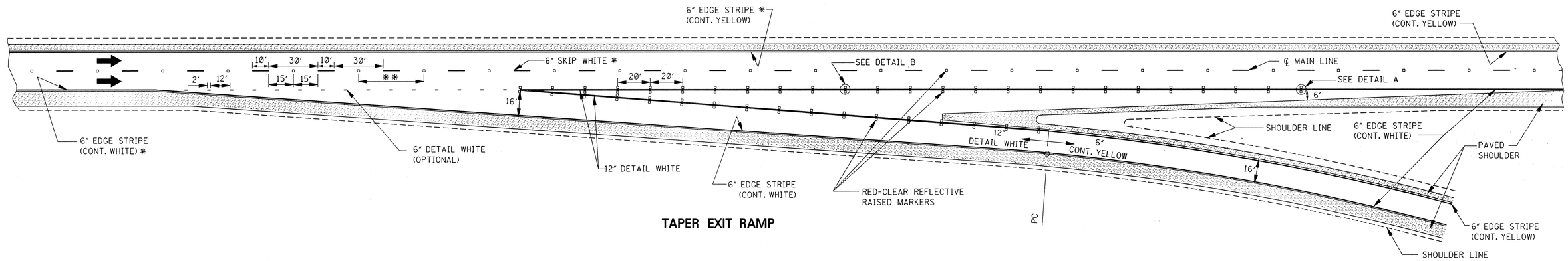

TAPER EXIT RAMP

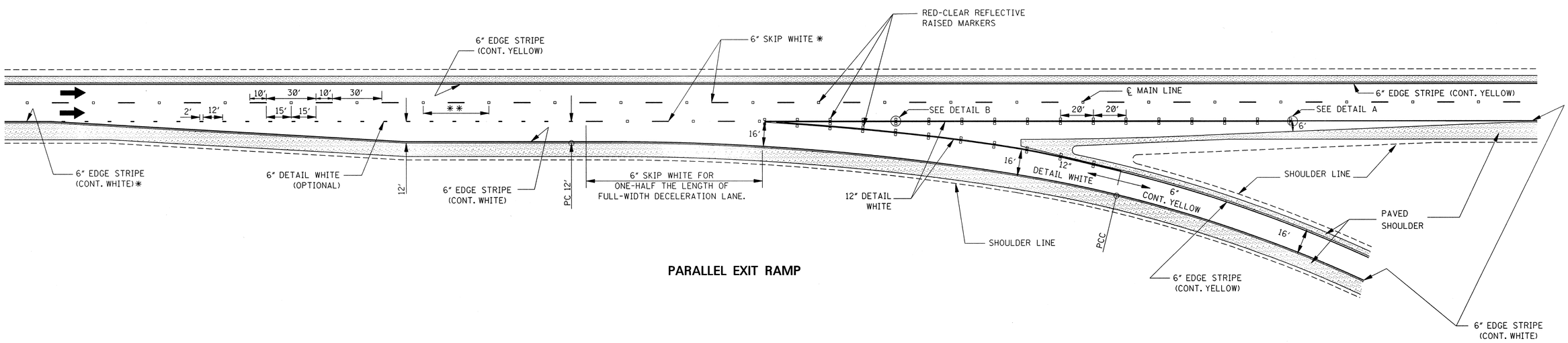

PARALLEL EXIT RAMP

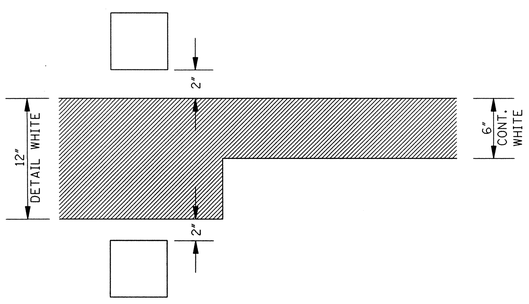

DETAIL A

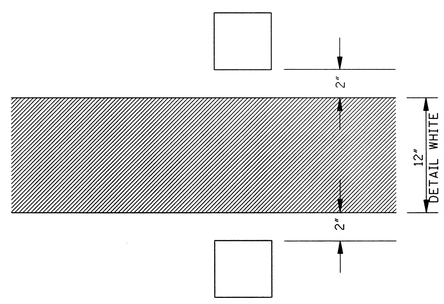

DETAIL B

GENERAL NOTES:

✱1. SEE SHEET PM-1 FOR THE PLACEMENT OF LANE-LINE STRIPE WITH RESPECT TO THE PAVEMENT JOINT AND FOR THE PLACEMENT OF THE EDGE LINE WITH RESPECT TO THE OUTSIDE EDGE OF THE TRAVELED WAY.

✱✱2. ON THE MAIN FACILITY, PLACE REFLECTIVE RED-CLEAR RAISED PAVEMENT MARKERS AT A 40′ SPACING ON ALL LANE-LINE(S) THROUGHOUT THE INTERCHANGE AREA BEGINNING 1000′ IN ADVANCE (IN DIRECTION OF TRAFFIC) OF THE EXIT RAMP TAPER AND CONTINUING THROUGH THE INTERCHANGE TO THE END OF THE ENTRANCE RAMP TAPER.

3. PAVEMENT MARKERS SHALL BE HIGH PERFORMANCE REFLECTIVE RAISED PAVEMENT MARKERS AS LISTED IN THE MDOT "APPROVED SOURCES OF MATERIALS."

DATE	REVISION	BY
12-1-98	REVISE STRIPE WIDTH	S.W.R.

MISSISSIPPI DEPARTMENT OF TRANSPORTATION
ROADWAY DESIGN DIVISION
STANDARD PLAN

PAVEMENT MARKING DETAILS FOR INTERCHANGE EXIT RAMPS (PARALLEL AND TAPER)

ENGLISH

WORKING NUMBER PM-4

ISSUE DATE: OCTOBER 1, 1998

SHEET NUMBER 123

STATE	PROJECT NO.
MISS.	

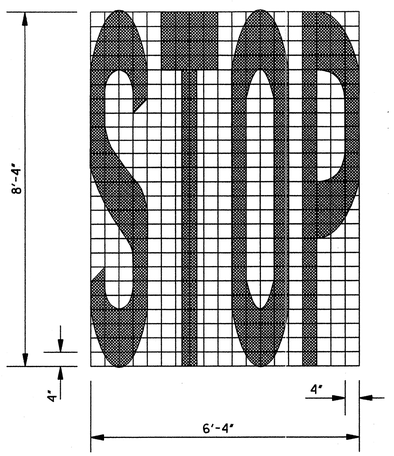

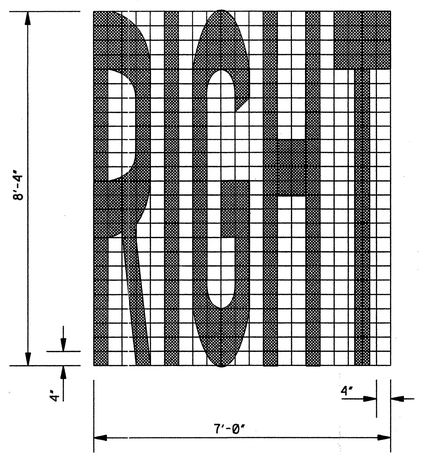

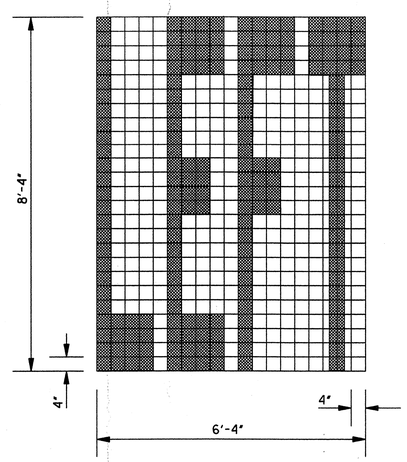

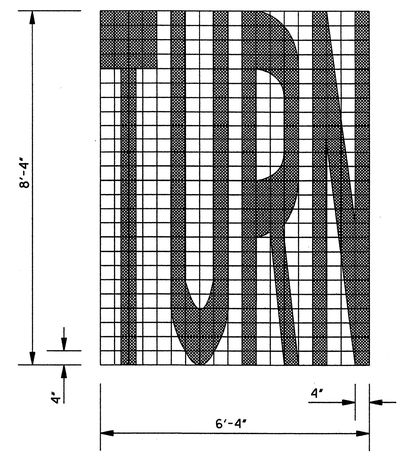

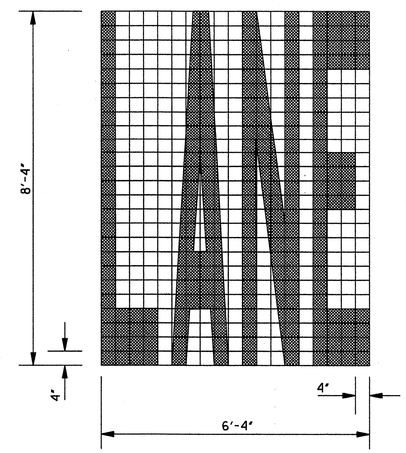

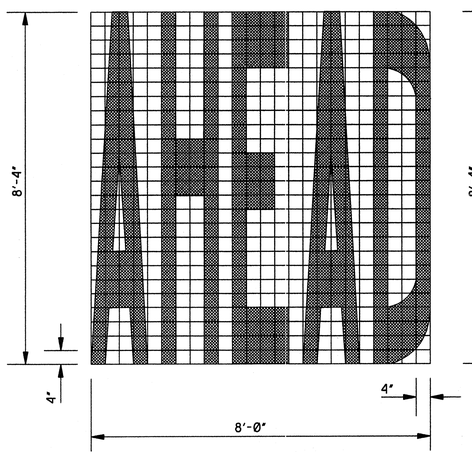

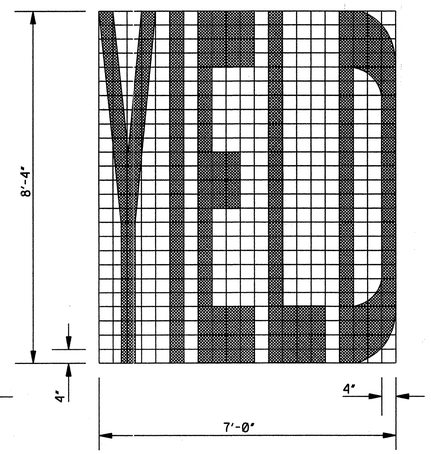

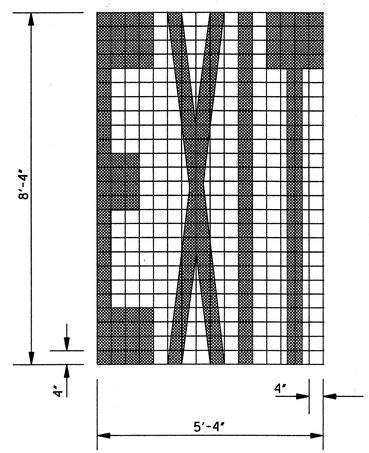

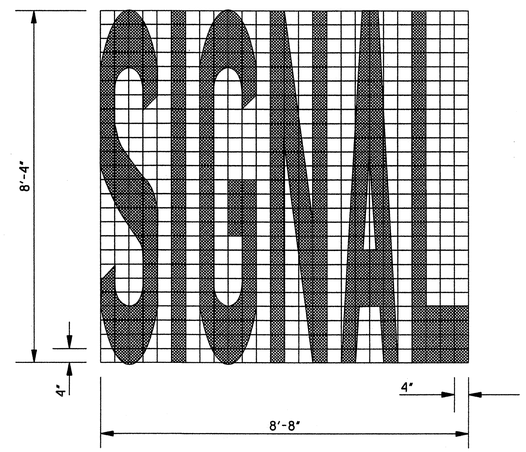

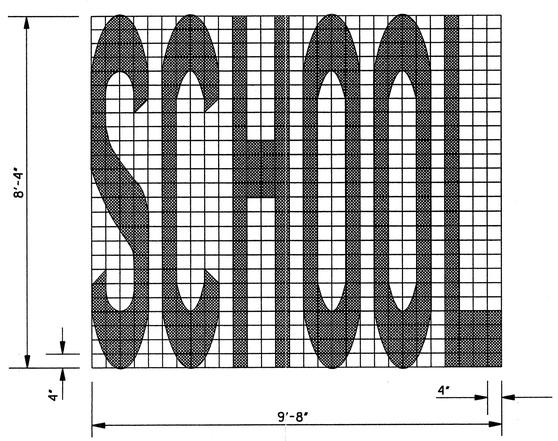

GENERAL NOTES:

1. UNLESS OTHERWISE SHOWN ON THE PLANS, ALL PAVEMENT MARKING LEGENDS SHALL BE APPLIED USING HIGH PERFORMANCE MATERIALS.
2. TWO HORIZONTAL GAPS (CAUSED BY TEMPLATE CONNECTORS) OF 1½" OR LESS AND EXTENDING THE FULL WIDTH ARE PERMITTED IN EACH LETTER.
3. FOR OTHER DETAILS, SEE THE MANUAL ON UNIFORM TRAFFIC CONTROL DEVICES.
4. PAY QUANTITIES FOR PAVEMENT MARKING LEGENDS ARE AS FOLLOWS:

PAY QUANTITIES

LEGEND	AREA (ft^2)
STOP	24.6
RIGHT	28.6
LEFT	19.5
TURN	27.3
LANE	22.7
AHEAD	32.3
YIELD	26.8
EXIT	18.5
SIGNAL	32.5
SCHOOL	35.5

DATE	REVISION	BY

MISSISSIPPI DEPARTMENT OF TRANSPORTATION
ROADWAY DESIGN DIVISION
STANDARD PLAN

PAVEMENT MARKING LEGEND DETAILS

ENGLISH

WORKING NUMBER
PM-5

ISSUE DATE: OCTOBER 1, 1998

SHEET NUMBER
124

STATE	PROJECT NO.
MISS.	

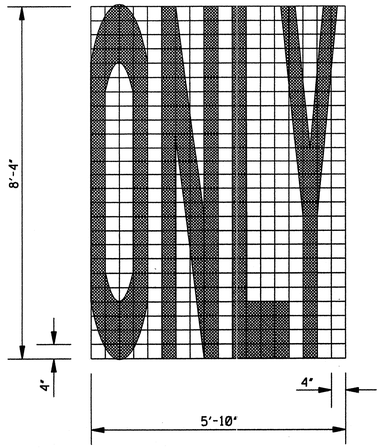

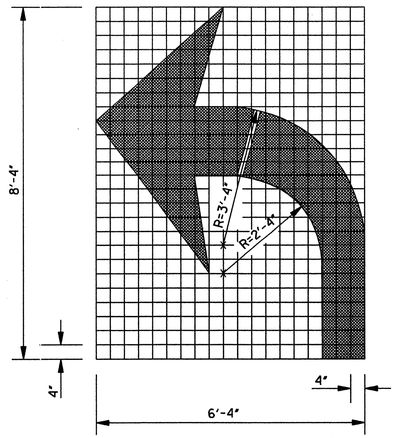

TURN ARROW

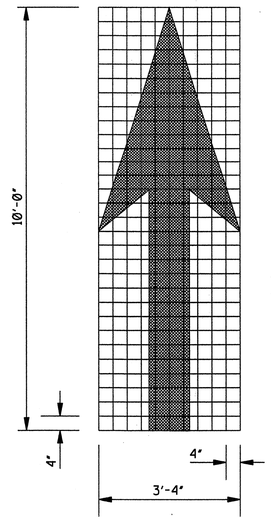

THRU ARROW

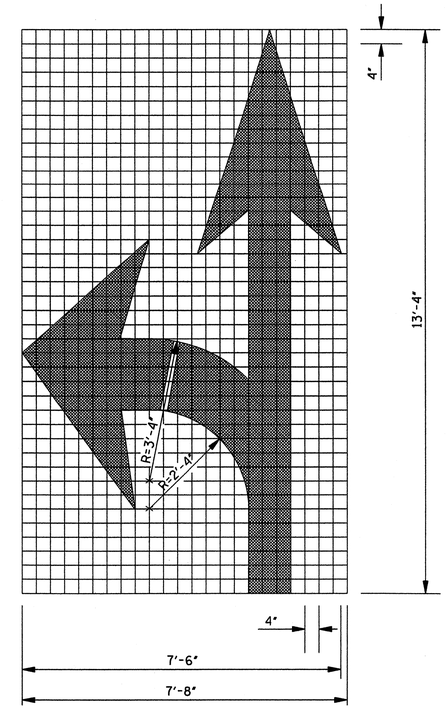

COMBINATION ARROW

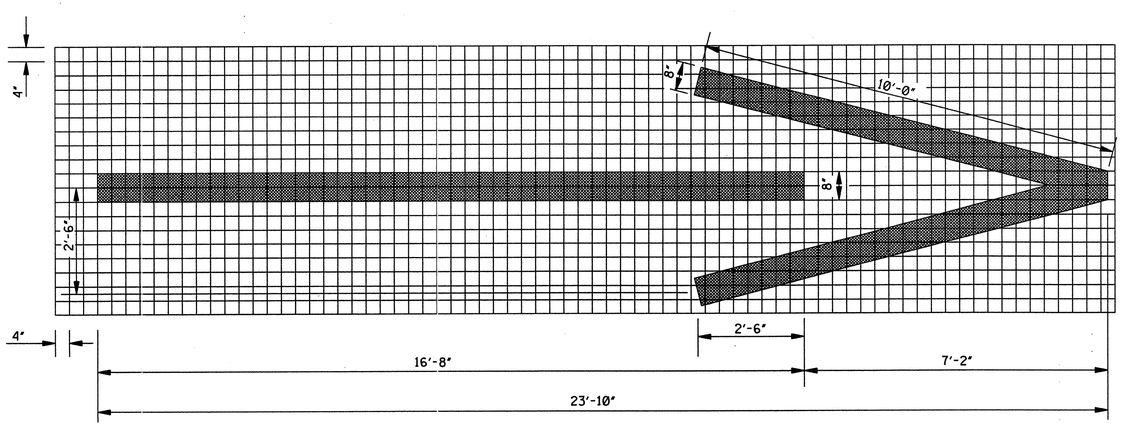

1–WAY ARROW

GENERAL NOTES:

1. UNLESS OTHERWISE SHOWN ON THE PLANS, ALL PAVEMENT MARKING LEGENDS, INCLUDING TURN ARROWS, SHALL BE APPLIED USING HIGH PERFORMANCE MATERIALS.
2. TWO HORIZONTAL GAPS (CAUSED BY TEMPLATE CONNECTORS) OF 1½" OR LESS AND EXTENDING THE FULL WIDTH ARE PERMITTED IN EACH LETTER.
3. FOR OTHER DETAILS, SEE THE MANUAL ON UNIFORM TRAFFIC CONTROL DEVICES.
4. PAY QUANTITIES FOR PAVEMENT MARKING LEGENDS ARE AS FOLLOWS:

PAY QUANTITIES

LEGEND/SYMBOL	AREA (ft^2)
ONLY	22.0
TURN ARROW	16.4
THRU ARROW	12.3
COMB. ARROW	27.5
1-WAY ARROW	24.3

DATE	REVISION	BY

MISSISSIPPI DEPARTMENT OF TRANSPORTATION
ROADWAY DESIGN DIVISION
STANDARD PLAN

PAVEMENT MARKING LEGEND DETAILS

ENGLISH

WORKING NUMBER PM-6

ISSUE DATE: OCTOBER 1, 1998

SHEET NUMBER 125

STATE	PROJECT NO.
MISS.	

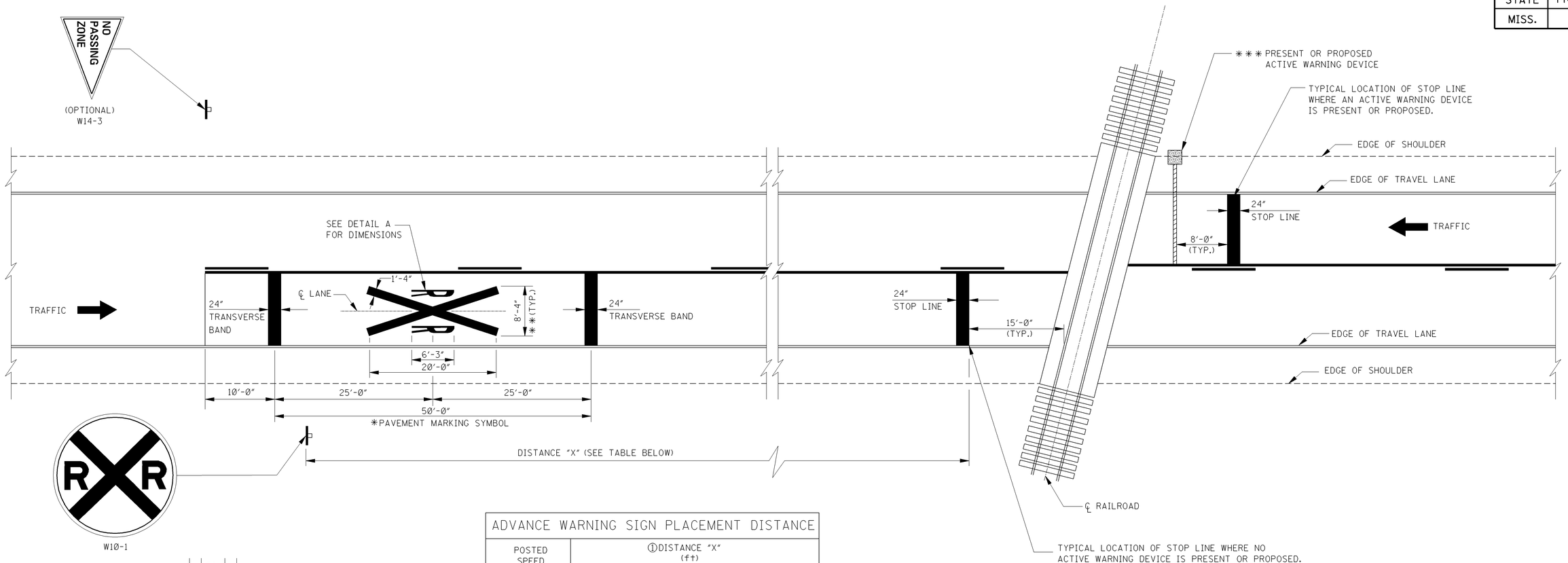

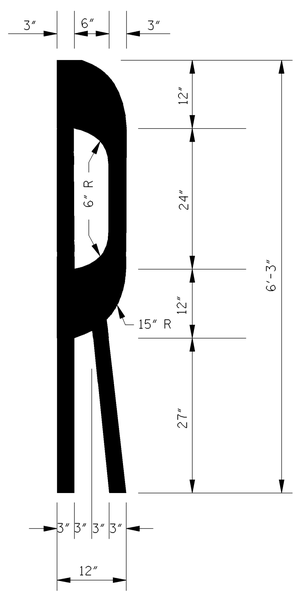

DETAIL A
STANDARD "R" PAVEMENT MARKING
FOR R X R SYMBOL

ADVANCE WARNING SIGN PLACEMENT DISTANCE

POSTED SPEED (mph)	①DISTANCE "X" (ft)	
	RURAL	URBAN
20	175	100
25	250	100
30	325	100
35	400	② 150
40	475	② 225
45	550	300
50	625	375
55	700	450
60	775	550

NOTES:
① DISTANCE "X" MAY BE ADJUSTED IF PROHIBITIVE PHYSICAL CONDITIONS EXIST AT THE DESIGNATED DISTANCE.

② THESE DISTANCES MAY BE ADJUSTED TO A MINIMUM OF 100' IN RESIDENTIAL AREAS OR BUSINESS DISTRICTS WHERE LOW SPEEDS ARE PREVALENT.

GENERAL NOTES:

*1. A PORTION OF THE PAVEMENT MARKING SYMBOL SHOULD BE DIRECTLY OPPOSITE THE ADVANCE WARNING SIGN (W10-1).

**2. WIDTH OF R X R SYMBOL MAY VARY ACCORDING TO LANE WIDTH. HOWEVER, ON MULTI-LANE ROADS, THE TRANSVERSE BANDS AND STOP LINE SHOULD EXTEND ACROSS ALL APPROACH LANES, AND INDIVIDUAL R X R SYMBOLS SHOULD BE USED IN EACH APPROACH LANE.

⚠ 3. R X R SYMBOL (63.0 ft^2), TRANSVERSE BANDS AND STOP LINE SHALL BE PAID FOR AS LEGEND, WHITE (PLASTIC). (MATERIAL OPTIONAL FOR OTHER AGENCIES).

***4. REFER TO THE "MANUAL ON UNIFORM TRAFFIC CONTROL DEVICES" FOR LOCATION OF PROPOSED WARNING DEVICES AT RAILROAD-HIGHWAY GRADE CROSSINGS.

DATE	REVISION	BY
3-01-02	REVISE NOTE	S.W.R.

MISSISSIPPI DEPARTMENT OF TRANSPORTATION
ROADWAY DESIGN DIVISION
STANDARD PLAN

TYPICAL PLACEMENT OF WARNING SIGNS AND PAVEMENT MARKINGS AT RAILROAD HIGHWAY GRADE CROSSINGS

ENGLISH

WORKING NUMBER PM-7

ISSUE DATE: OCTOBER 1, 1998

SHEET NUMBER 126

STATE	PROJECT NO.
MISS.	

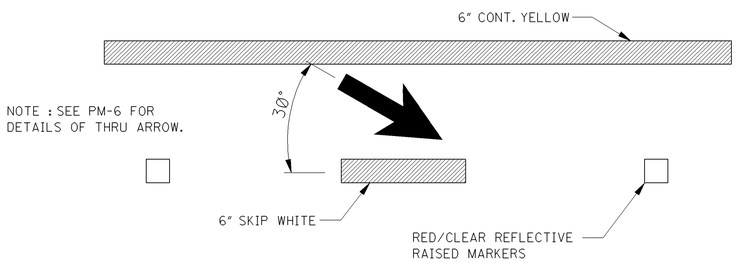

DETAIL F △2

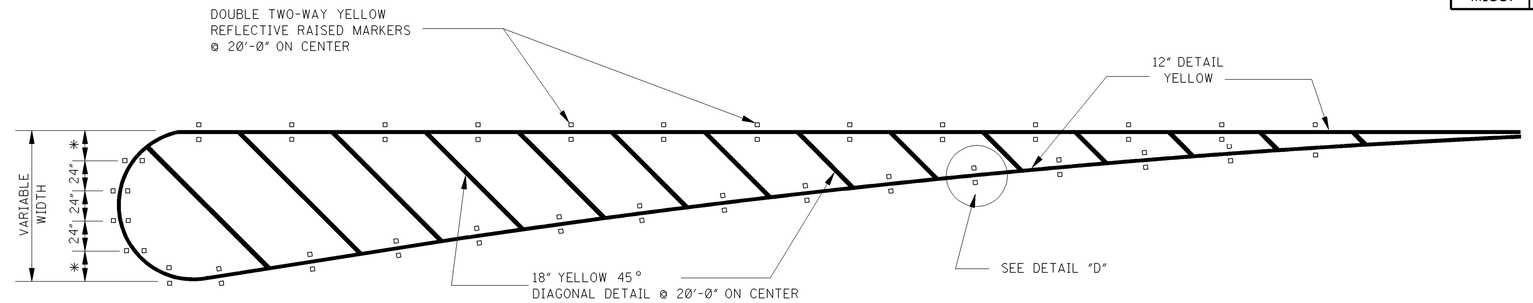

DETAIL A

*NOTE: VARIABLE (24" MAXIMUM)

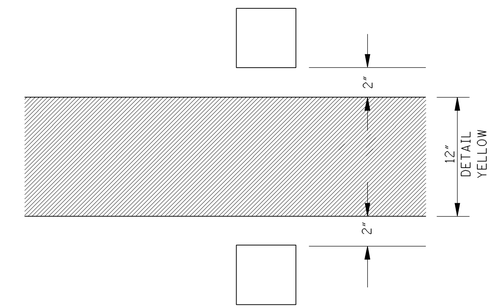

DETAIL D

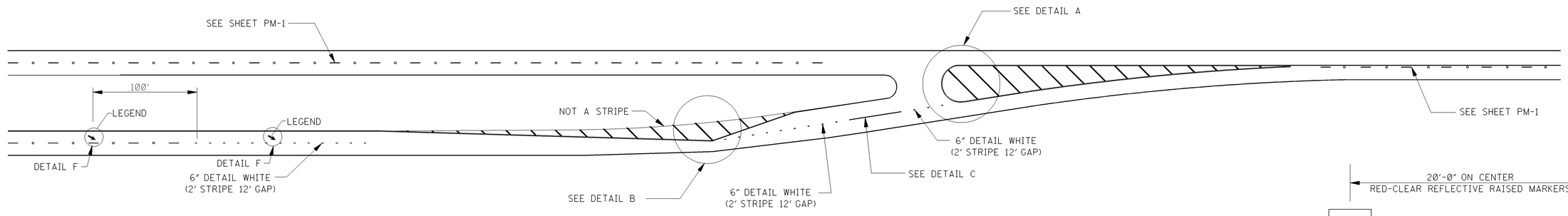

PLAN

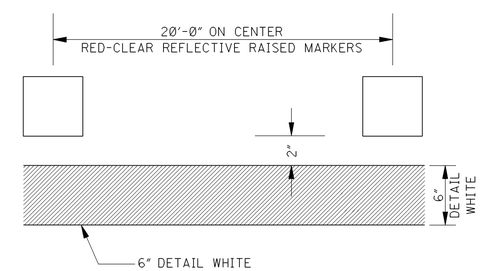

DETAIL C

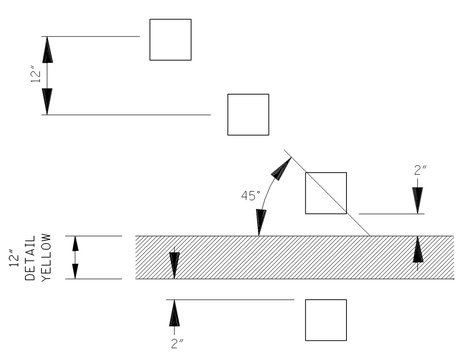

DETAIL E

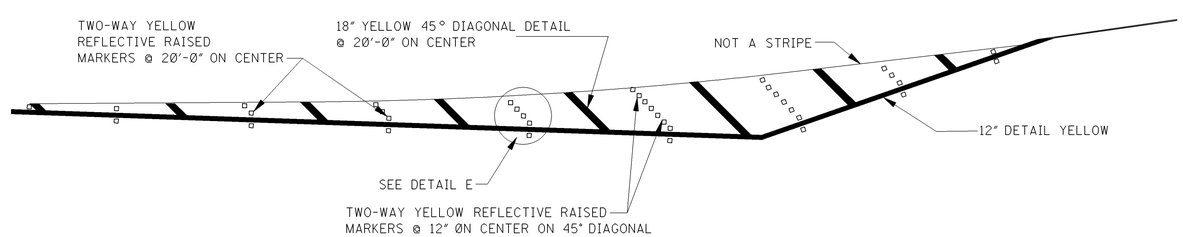

DETAIL B

DATE	REVISION	BY
3-01-02	REVISE DETAIL DESIGNATION	S.W.R. △4
12-1-99	REVISE STRIPE WIDTH	S.W.R. △1

MISSISSIPPI DEPARTMENT OF TRANSPORTATION
ROADWAY DESIGN DIVISION
STANDARD PLAN

4-LANE TO 2-LANE TRANSITION AT INTERCHANGE

ENGLISH

WORKING NUMBER PM-8

ISSUE DATE: OCTOBER 1, 1998

SHEET NUMBER 127

STATE	PROJECT NO.
MISS.	

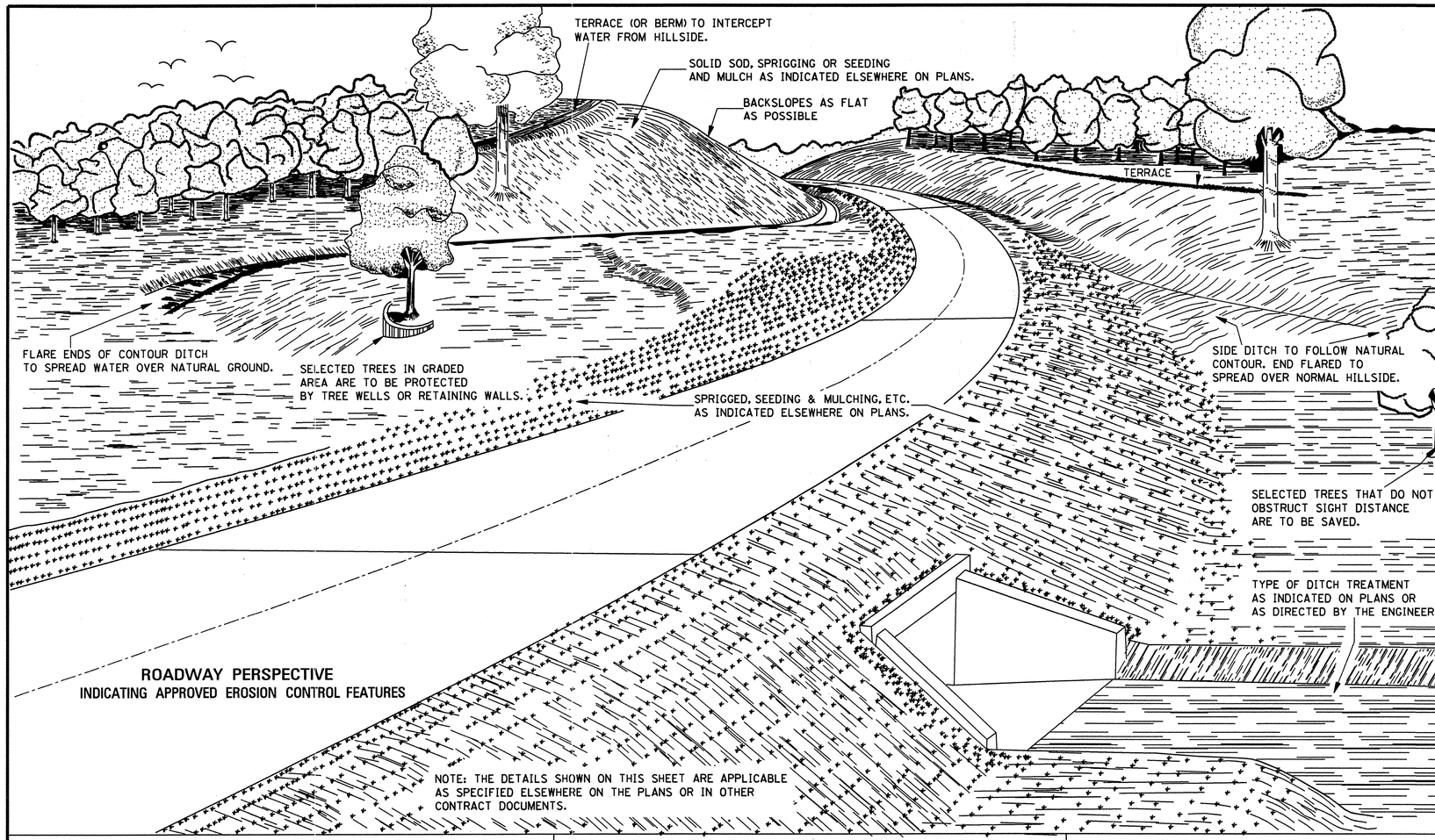

ROADWAY PERSPECTIVE
INDICATING APPROVED EROSION CONTROL FEATURES

NOTE: THE DETAILS SHOWN ON THIS SHEET ARE APPLICABLE AS SPECIFIED ELSEWHERE ON THE PLANS OR IN OTHER CONTRACT DOCUMENTS.

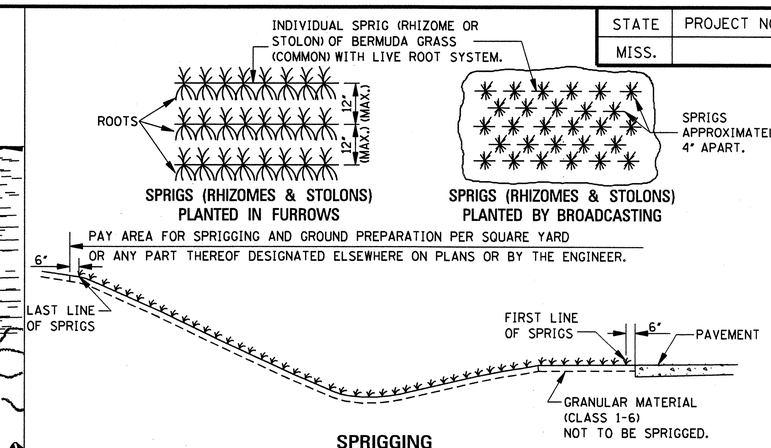

SPRIGGING

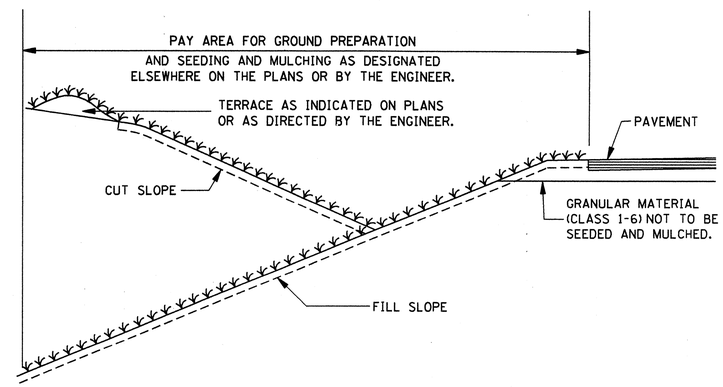

SEEDING AND MULCHING

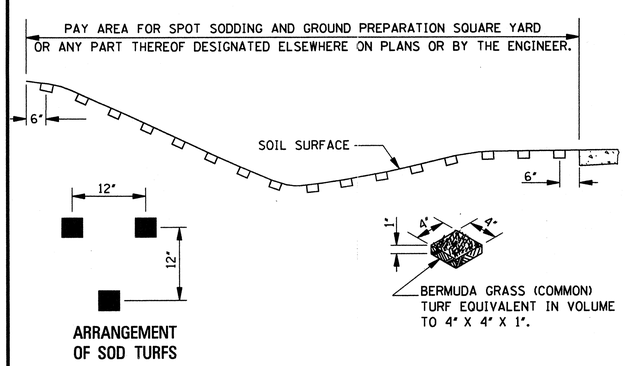

SPOT SODDING

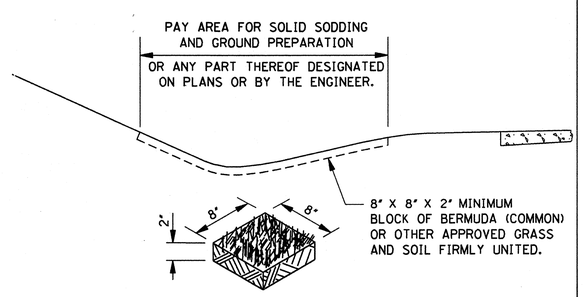

SOLID SODDING

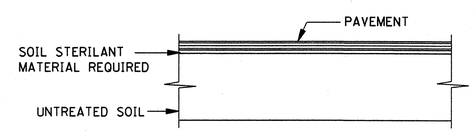

SOIL STERILIZATION UNDER PAVED AREAS
(ISLANDS, MEDIANS OR SLOPE PAVEMENT)

GENERAL NOTE:

1. LONGITUDINAL AND TRANSVERSE MEASUREMENTS FOR THE PAY AREA SHALL BE TAKEN ALONG THE SLOPES.

DATE	REVISION	BY

MISSISSIPPI DEPARTMENT OF TRANSPORTATION
ROADWAY DESIGN DIVISION
STANDARD PLAN

EROSION CONTROL

DEPARTMENT OF TRANSPORTATION ENGLISH MISSISSIPPI

WORKING NUMBER EC-1

ISSUE DATE: OCTOBER 1, 1998

SHEET NUMBER 140

STATE	PROJECT NO.
MISS.	

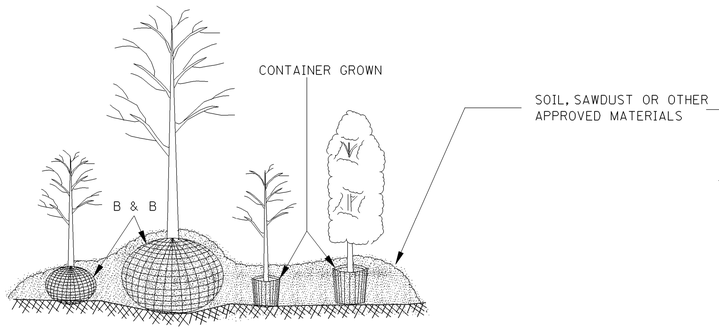

B & B AND CONTAINER GROWN PLANTS

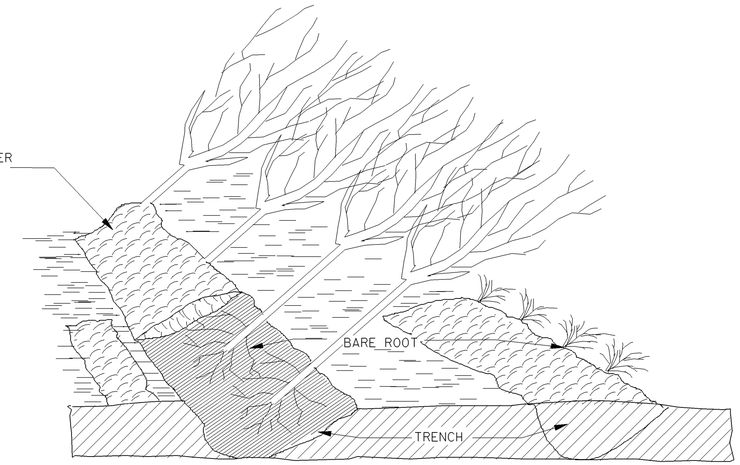

BARE ROOT PLANTS

NOTE: METHOD OF "HEELING IN" BEFORE PLANTING CONSISTS OF PLACING THE PLANTS IN A TRENCH AND COVERING THE ROOTS WITH DIRT. THIS MAY BE DONE ON TRUCK FOR EASE OF MOVEMENT. SAW DUST OR OTHER APPROVED MATERIAL MAY BE USED. ROOTS MUST BE KEPT MOIST AT ALL TIMES.

ROOT PROTECTION ("HEELING-IN") DURING STORAGE

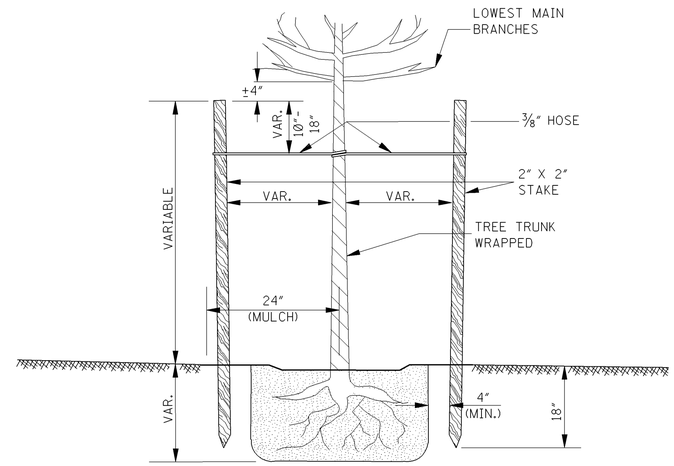

ELEVATION

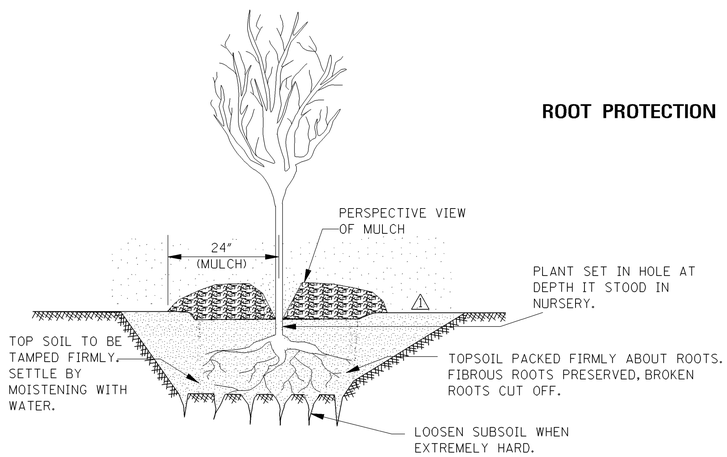

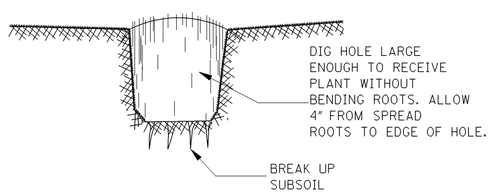

TREE AND SHRUB PLANTING (BARE ROOT)

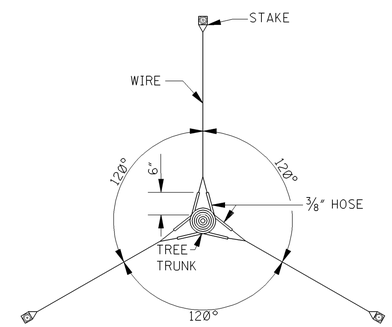

PLAN

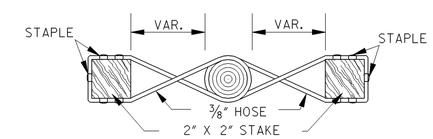

PLAN

DOUBLE VERTICAL STAKING METHOD

NOTE: ALL TREES SHALL BE STAKED OR GUYED. THE TRUNK OF ALL SMOOTH BARKED TREES SHALL BE WRAPPED. LARGE SHRUBS TO BE STAKED AND WRAPPED WHEN SPECIFIED ON PLANS.

LOOSEN BURLAP AT TOP OF BALL AND ROLL BACK OR CUT OFF TOP ONE-THIRD. IF PLANTS ARE CONTAINER GROWN, REMOVE CONTAINER AND THE OUTSIDE OF THE ROOT MASS SHALL BE SCARIFIED (OR ROUGHED) AND CUT VERTICALLY IN 5 PLACES AROUND THE BACK. DO NOT BREAK BALL OF SOIL FROM ROOTS.

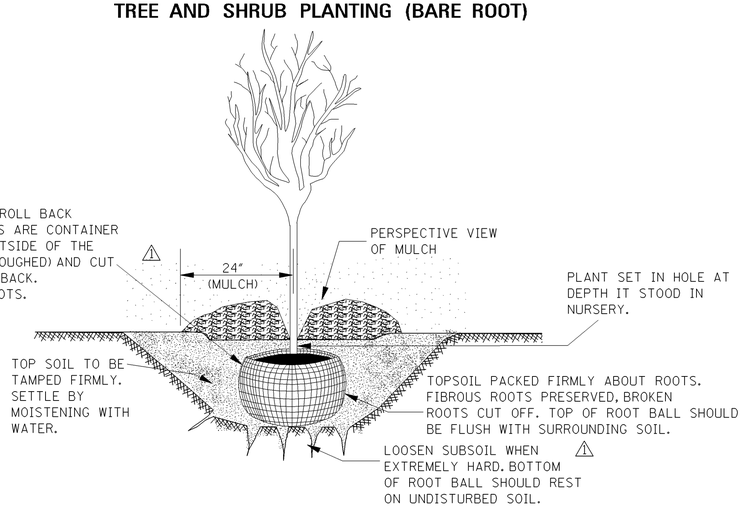

TREE AND SHRUB PLANTING (B & B OR CONTAINER GROWN)

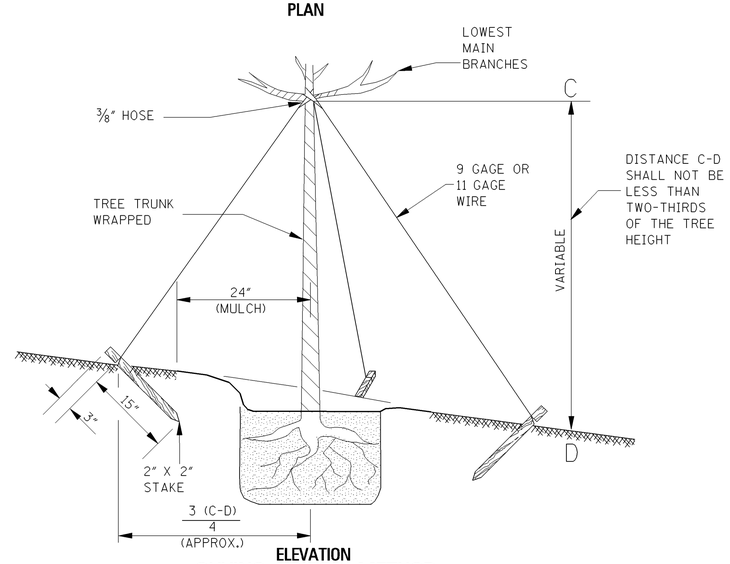

ELEVATION
GUYING TRIPOD METHOD

GENERAL NOTES:

1. THE TYPE(S), RATE(S) OF APPLICATION AND PLACEMENT OF FERTILIZER AND MULCH SHALL BE IN ACCORDANCE WITH THE REQUIREMENTS OF THE PLANS AND SPECIFICATIONS.
2. ⚠ TENSION IN GUY WIRES WILL BE SUCH AS TO ALLOW SOME SWAYING MOTION IN TREE.

DATE	REVISION	BY
3-01-02	REVISE NOTE & DRAWING	S.W.R.

MISSISSIPPI DEPARTMENT OF TRANSPORTATION
ROADWAY DESIGN DIVISION
STANDARD PLAN

TYPICAL PLANTING DETAILS FOR TREES & SHRUBS

ENGLISH

WORKING NUMBER PD-1

ISSUE DATE: OCTOBER 1, 1998

SHEET NUMBER 141

STATE	PROJECT NO.
MISS.	

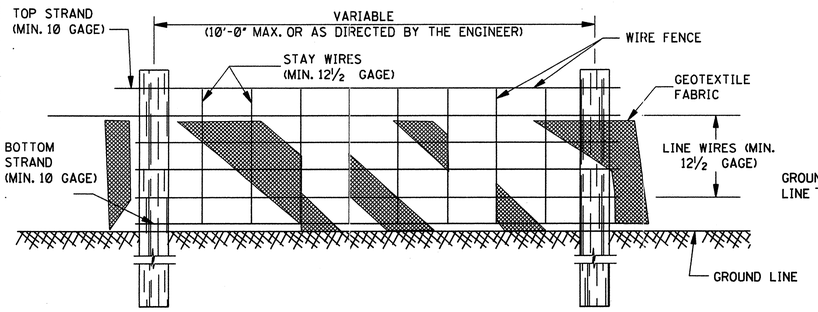

FRONT ELEVATION

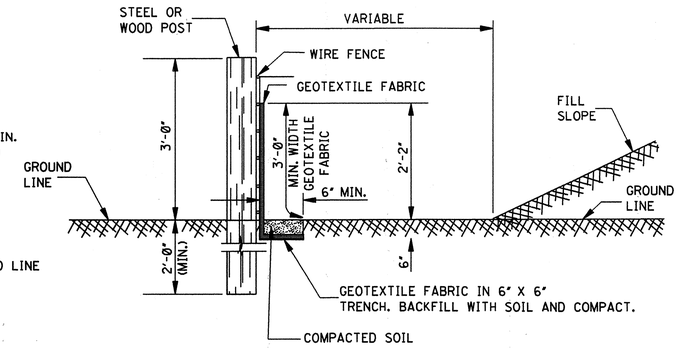

SIDE ELEVATION

TEMPORARY SILT FENCE

NOTES:

1. WIRE SHALL BE MINIMUM OF 32" IN WIDTH AND SHALL HAVE A MINIMUM OF 6 LINE WIRES WITH 12" STAY SPACING.
2. GEOTEXTILE FABRIC SHALL BE A MINIMUM OF 36" IN WIDTH AND SHALL BE FASTENED ADEQUATELY TO THE WIRE AS DIRECTED BY THE ENGINEER.
3. STEEL POST SHALL BE 5'-0" IN HEIGHT AND OF THE SELF-FASTENER ANGLE STEEL TYPE. WOOD POST SHALL BE A MINIMUM OF 5'-0" IN HEIGHT AND 3" OR MORE IN DIAMETER. WIRE FENCE SHALL BE FASTENED TO WOODEN POST WITH NOT LESS THAN 9 GAGE WIRE STAPLES 1" LONG.
4. GEOTEXTILE FABRIC MEETING THE TYPE II MATERIAL REQUIREMENTS AND INSTALLED ACCORDING TO SPECIFICATIONS MAY BE USED WITHOUT WIRE FENCE.

FRONT ELEVATION

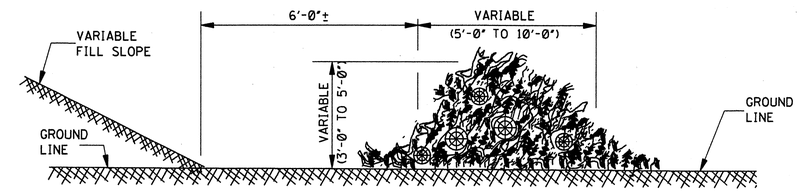

SIDE ELEVATION

TEMPORARY BRUSH BARRIER

NOTES:

1. BRUSH BARRIER TO BE USED WHERE NATURAL GROUND IS LEVEL OR SLOPING AWAY FROM PROJECT.
2. PLACE BRUSH, LOG AND TREE LAPS APPROXIMATELY PARALLEL TO TOE OF FILL SLOPE WITH SOME OF THE HEAVIER MATERIALS BEING PLACED ON TOP TO PROPERLY SECURE THE BARRIER AS DETAILED AT LOCATIONS SHOWN ON PLANS OR AS DIRECTED BY THE ENGINEER.
3. TO ALLOW WATER TO FLOW THROUGH BRUSH BARRIER, INTERMINGLE THE BRUSH, LOG AND TREE LAPS SO AS NOT TO FORM A SOLID DAM.

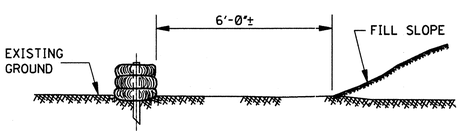

ELEVATION

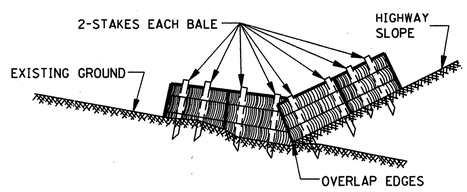

ELEVATION

NOTE: SIMILAR TREATMENT TO BE USED IN DITCHES.

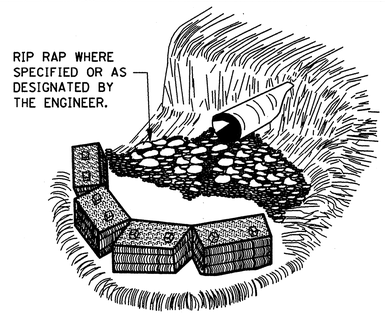

CULVERT

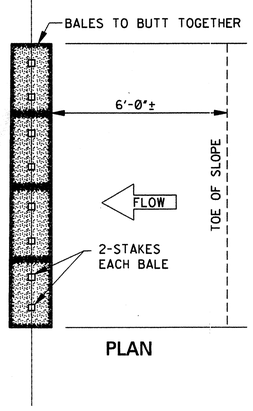

PLAN

FALL OF DITCH (%)	DISTANCE* (ft)
0 - 1	100'
1 - 2	50'
>2	25'

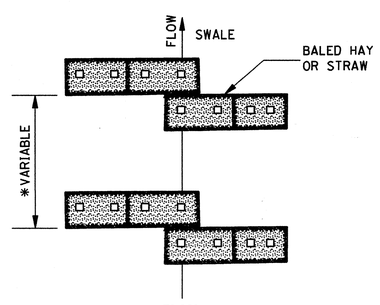

PLAN

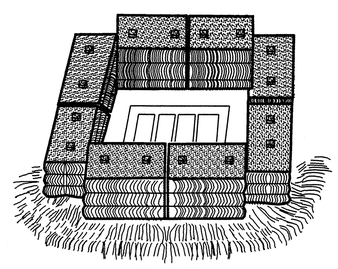

DROP INLET

TEMPORARY EROSION CHECKS USING HAY OR STRAW BALES

NOTE: EMBED ALL BALES 3" MINIMUM INTO GROUND AND STAKE (2" X 2" X 36") SECURELY.

GENERAL NOTES:

1. THE CONTRACTOR SHALL BE REQUIRED TO FURNISH ALL MATERIALS AND PERFORM ALL WORK FOR THE PROPER INSTALLATION, MAINTENANCE AND REMOVAL OF TEMPORARY EROSION CONTROL MEASURES NECESSARY TO CONTROL SILTATION.
2. TEMPORARY BRUSH BARRIERS SHALL BE USED AS REQUIRED BUT WILL NOT BE MEASURED FOR SEPARATE PAYMENT.
3. THE USE OF TEMPORARY EROSION CONTROL MEASURES OTHER THAN TEMPORARY BRUSH BARRIERS WILL ONLY BE REQUIRED AND MEASURED FOR SEPARATE PAYMENT WHEN APPROPRIATE PAY ITEM(S) IS INCLUDED IN THE BID SCHEDULE OF THE PROPOSAL.

DATE	REVISION	BY

MISSISSIPPI DEPARTMENT OF TRANSPORTATION
ROADWAY DESIGN DIVISION
STANDARD PLAN

TYPICAL TEMPORARY EROSION CONTROL MEASURES
(SILT FENCE, HAY BALES & BRUSH BARRIER)

ENGLISH

WORKING NUMBER TEC-1

ISSUE DATE: OCTOBER 1, 1998

SHEET NUMBER 142

STATE	PROJECT NO.
MISS.	

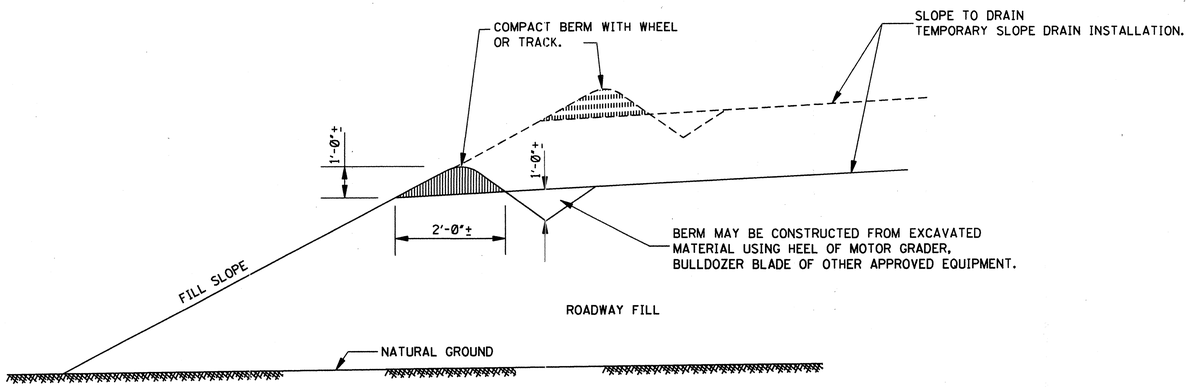

TEMPORARY SHOULDER BERM

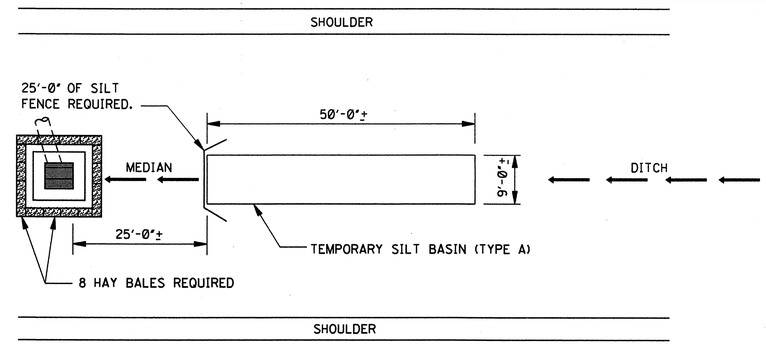

TEMPORARY MEDIAN SILT BASIN (TYPE A)

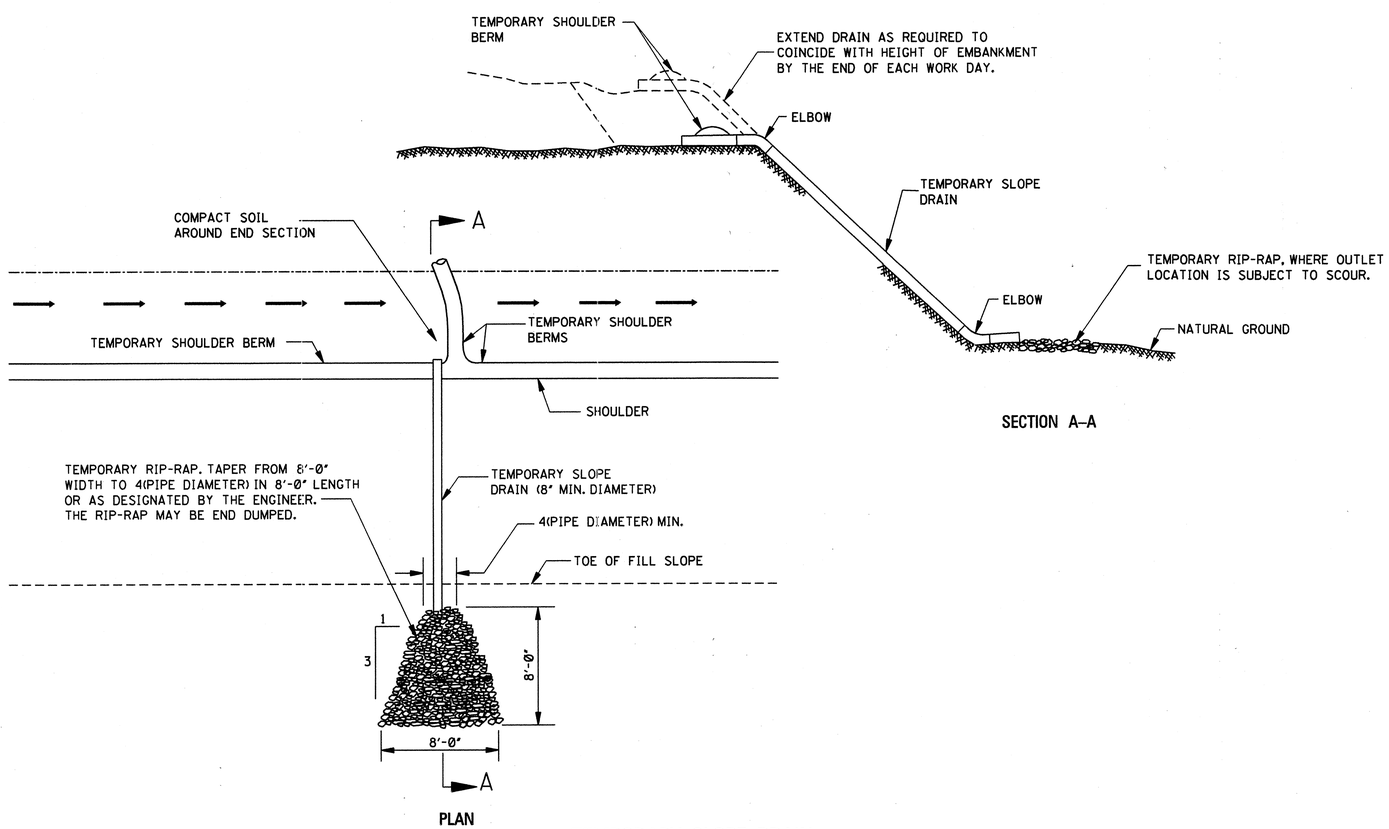

TEMPORARY SLOPE DRAIN

NOTE: TEMPORARY SLOPE DRAINS TO BE PLACED AT LOW POINT OF ALL SAG VERTICAL CURVES. INTERMEDIATE LOCATIONS TO BE PLACED AS DESIGNATED OR DEEMED APPROPRIATE BY THE CONTRACTOR AND APPROVED BY THE ENGINEER.

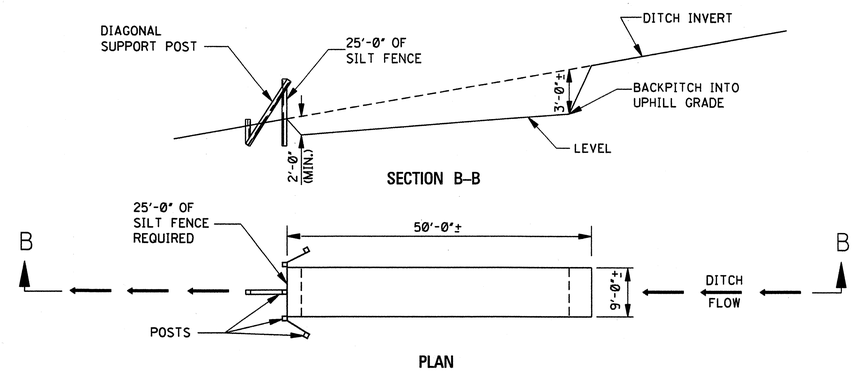

TEMPORARY SILT BASIN (TYPE A)

NOTE: TEMPORARY SILT BASIN (TYPE A) TO BE PLACED IN SURFACE DRAIN DITCHES AND SIDE DITCHES AT THE END OF CUT SECTIONS IMMEDIATELY PRECEEDING DITCH INLETS AND JUST BEFORE THE WATER (RUNOFF) LEAVES THE RIGHT-OF-WAY OR ENTERS A WATER COURSE. LOCATION AND SIZE (OTHER THAN AS SHOWN) MAY BE REQUIRED AS DIRECTED BY THE ENGINEER.

GENERAL NOTES:

1. THE CONTRACTOR SHALL BE REQUIRED TO FURNISH ALL MATERIALS AND PERFORM ALL WORK FOR THE PROPER INSTALLATION, MAINTENANCE AND REMOVAL OF TEMPORARY EROSION CONTROL MEASURES NECESSARY TO CONTROL SILTATION.
2. THE USE OF TEMPORARY EROSION CONTROL MEASURES SHOWN ON THIS SHEET WILL ONLY BE REQUIRED AND MEASURED FOR SEPARATE PAYMENT WHEN AN APPROPRIATE PAY ITEM IS INCLUDED IN THE BID SCHEDULE OF THE PROPOSAL.

DATE	REVISION	BY

MISSISSIPPI DEPARTMENT OF TRANSPORTATION
ROADWAY DESIGN DIVISION
STANDARD PLAN

TYPICAL TEMPORARY EROSION CONTROL MEASURES
(SLOPE DRAIN AND TYPE A SILT BASIN)

ENGLISH

WORKING NUMBER TEC-2

ISSUE DATE: OCTOBER 1, 1998

SHEET NUMBER 143

STATE	PROJECT NO.
MISS.	

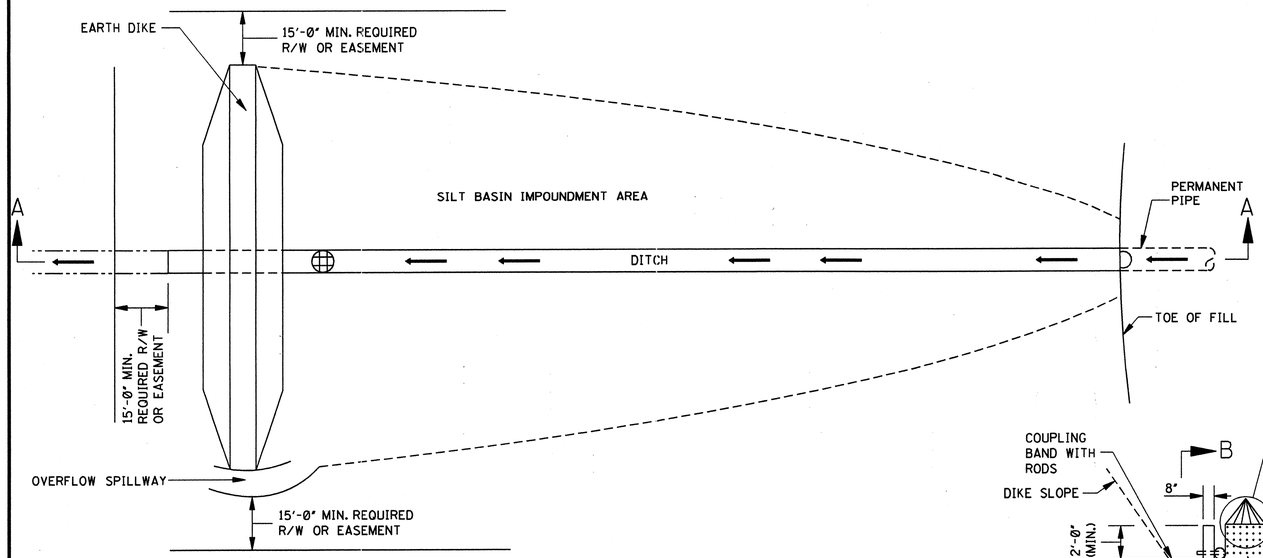

PLAN

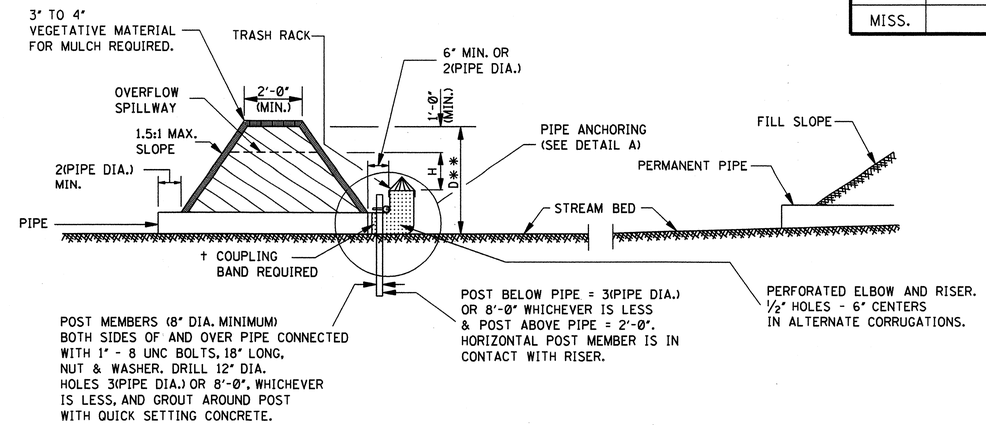

SECTION A–A

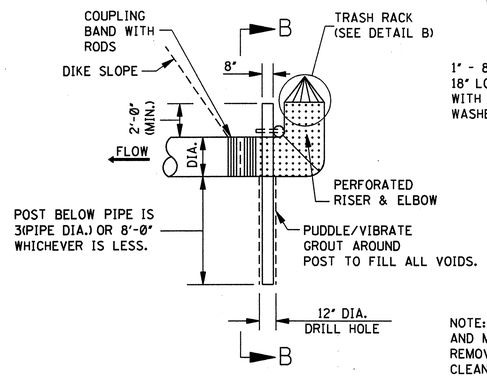

DETAIL A

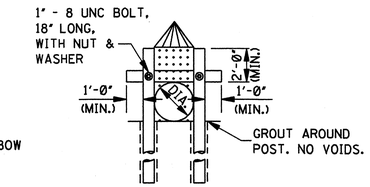

SECTION B–B

NOTE: POST MEMBERS MAY BE GREEN TIMBER AND MAY BE CUT OFF AT NATURAL GROUND REMOVAL. POST MUST BE 8" MINIMUM CLEAN DIAMETER.

PIPE ANCHORAGE

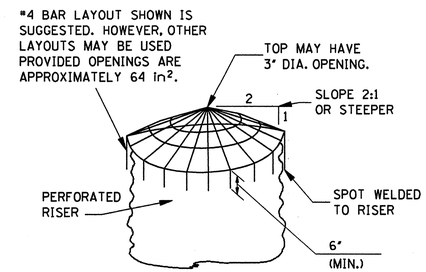

DETAIL B
TRASH RACK INSTALLATION

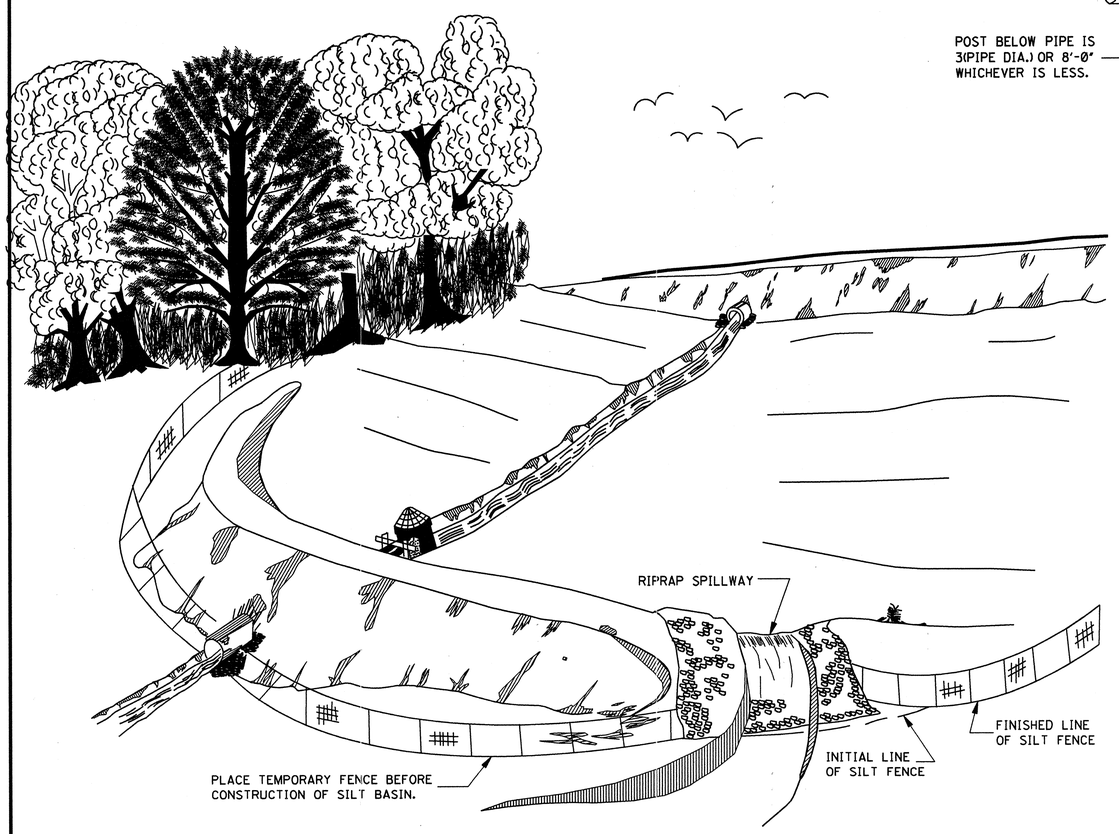

TEMPORARY SILT BASIN (TYPE B)

GENERAL NOTES:

1. PROVIDE OVERFLOW SPILLWAY IN NATURAL GROUND AT A MINIMUM OF 1'-0" BELOW TOP OF DIKE. CROSS-SECTIONAL AREA OF SPILLWAY IS EQUAL TO 1.5 TIMES THE AREA OF THE OUTLET PIPE MINIMUM. RIPRAP SHALL BE REQUIRED AT THE SPILLWAY. AFTER THE PURPOSE OF THE SILT BASIN HAS BEEN SERVED, THE DIKE AND RIPRAP MAY REMAIN IN PLACE AT THE DISCRETION OF THE ENGINEER, BUT THE DRAIN PIPE WITH RISER SHALL BE REMOVED AND THE NEWLY DISTURBED AREA REVEGETATED.
2. BASIN AND DIKE DIMENSIONS DO NOT REQUIRE CONSTRUCTION TO NEAT LINES.
3. THE SILT BASIN MAY BE CONSTRUCTED IN ANY SHAPE WITH THE DIKE EXTENDING ALONG ONE OR MORE SIDES AS LONG AS THE LENGTH MEASURED IN THE DIRECTION OF FLOW IS APPROXIMATELY TWICE THE WIDTH AND THE IMPOUNDMENT AREA AND DEPTH AT LEAST AS LARGE AS INDICATED.
4. MINIMUM DIMENSIONS FOR SILT BASIN (TYPE B) ARE AS FOLLOWS:

MIN. DIMENSIONS OF SILT BASIN (TYPE B)				† COUPLING BAND	
PIPE	** D (ft-in)	H (ft-in)	* AREA (ft²)	LENGTH (in)	COUPLING RODS/SIDE
15"	4'-0"	1'-0"	310	12"	2 & 2
18"	5'-0"	1'-0"	550	12"	2 & 2
24"	5'-0"	1'-0"	1100	12"	2 & 2
30"	6'-0"	1'-6"	1850	24"	3 & 3
36"	6'-0"	1'-6"	2800	24"	3 & 3
42"	7'-0"	2'-0"	4200	24"	3 & 3
48"	8'-0"	2'-0"	6200	24"	3 & 3

NOTES:
* 1. IMPOUNDMENT SURFACE AREAS ARE MEASURED AT ELEVATION OF TOP OF ELBOW RISER.
** 2. RISER REQUIRED WHERE MINIMUM "D" DIMENSION IS EXCEEDED. LENGTH OF RISER IS EQUAL TO THE AMOUNT THAT MINIMUM "D" DIMENSION IS EXCEEDED.
† 3. COUPLING RODS TO BE 1/2" DIAMETER MINIMUM WITH LUGS.

5. IN SELECTING BASIN SIZE, CONSIDERATION MUST BE GIVEN TO THE AREA DISCHARGING INTO THE BASIN OTHER THAN THAT WHICH COMES THROUGH THE PIPE UNDER THE ROADWAY. THIS WILL AT TIMES NECESSITATE A LARGER BASIN AND OUTLET PIPE SECTION.
6. THE DIKE SHALL BE CONSTRUCTED OF A MATERIAL SUITABLE FOR ROADWAY EMBANKMENT.
7. SILT BASIN (TYPE B) REQUIRED AT LOCATION(S) INDICATED ON PLANS.
8. THE CONTRACTOR SHALL BE REQUIRED TO FURNISH ALL MATERIALS AND PERFORM ALL WORK FOR THE PROPER INSTALLATION, MAINTENANCE AND REMOVAL OF TEMPORARY EROSION CONTROL MEASURES NECESSARY TO CONTROL SILTATION.
9. THE USE OF THE TEMPORARY EROSION CONTROL MEASURE SHOWN ON THIS SHEET WILL ONLY BE REQUIRED AND MEASURED FOR SEPARATE PAYMENT WHEN AN APPROPRIATE PAY ITEM IS INCLUDED IN THE BID SCHEDULE OF THE PROPOSAL.
10. RIPRAP AND TEMPORARY SILT FENCE, USED IN CONJUNCTION WITH TYPE B SILT BASINS AS SHOWN BY THE DETAILS ON THIS SHEET, WILL NOT BE MEASURED FOR SEPARATE PAYMENT. THEIR COST SHALL BE INCLUDED IN THE PRICE BID FOR TYPE B SILT BASIN.

DATE	REVISION	BY

MISSISSIPPI DEPARTMENT OF TRANSPORTATION
ROADWAY DESIGN DIVISION
STANDARD PLAN

TYPICAL TEMPORARY EROSION CONTROL MEASURES
(TYPE B SILT BASIN)

ENGLISH

WORKING NUMBER TEC-3

ISSUE DATE: OCTOBER 1, 1998

SHEET NUMBER 144

STATE	PROJECT NO.
MISS.	

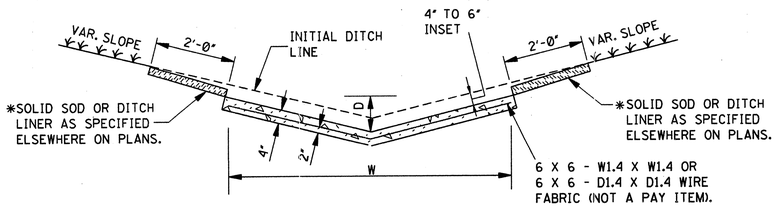

"V" TYPE SECTION

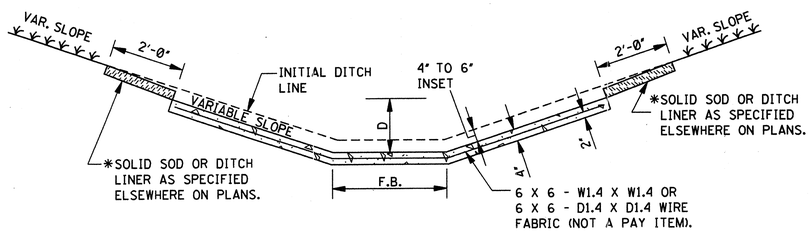

FLAT BOTTOM SECTION

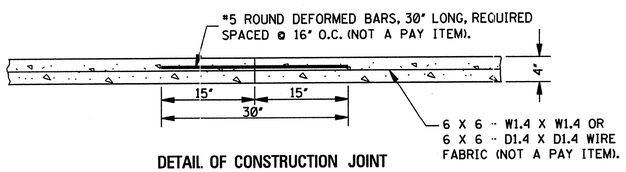

DETAIL OF CONSTRUCTION JOINT

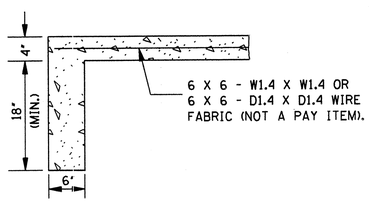

DETAIL OF TOE WALL

NOTE: TOE WALL REQUIRED UPSTREAM AND DOWNSTREAM.

CONCRETE PAVED DITCH

NOTES:

1. CONCRETE PAVED DITCHES SHALL BE GROOVED AT 20'-0" INTERVALS. THE GROOVES SHALL BE CUT TO A DEPTH OF NOT LESS THAN 1".
2. DIMENSIONS D & W ARE AS FOLLOWS:
   D(MINIMUM) = 6"
   D(NOMINAL) = 9"
   W(MINIMUM) = 24"
3. CHAIR SUPPORTS FOR THE WIRE MESH WILL NOT BE REQUIRED. HOWEVER, THE CONTRACTOR SHALL PLACE THE WIRE MESH IN A SATISFACTORY AND WORKMANLIKE MANNER TO ENSURE THAT THE FINAL POSITION IS REASONABLY NEAR THE POSITION INDICATED.

*4. CENTER ROW OF STAPLES MAY BE OMITTED ON DITCH LINER.

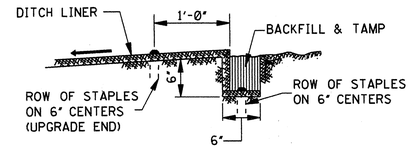

ANCHOR TRENCH DETAIL

NOTE: ANCHOR TRENCH REQUIRED AT THE BEGINNING AND ENDING OF EACH AREA TO BE COVERED, EXCEPT DOWNSTREAM END ADJOINING A STRUCTURE.

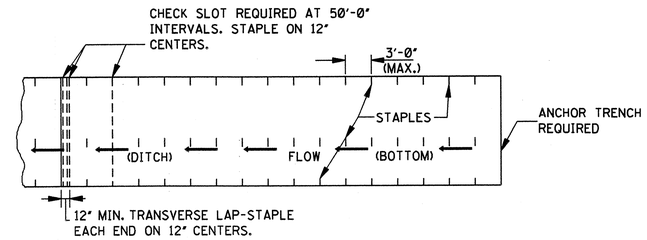

PLAN

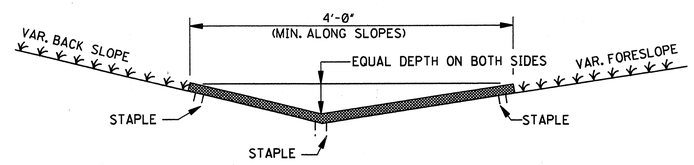

SECTION

DITCH LINER TREATMENT

(EXCELSIOR BLANKET, JUTE MESH OR EROSION CONTROL FABRIC)

NOTE: DITCHES TREATED WITH DITCH LINER WILL BE VEGETATED PRIOR TO TREATMENT, UNLESS OTHERWISE INDICATED.

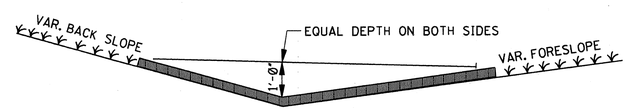

SECTION

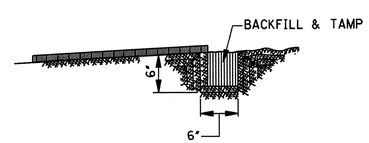

SLOT DETAIL

BITUMINOUS TREATED ROVING

NOTE: UPGRADE AND DOWNGRADE ENDS OF THE BITUMINOUS TREATED ROVING SHALL BE BURIED IN A 6" MINIMUM VERTICAL SLOT AND THE SOIL TAMPED FIRMLY AGAINST IT.

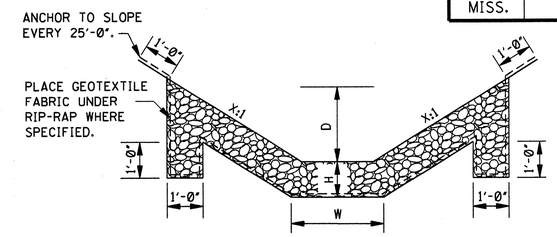

FLAT BOTTOM SECTION

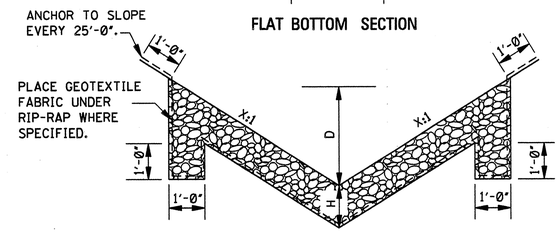

"V" TYPE SECTION

RIP-RAP TREATMENT

NOTES:

1. DIMENSIONS D, W AND X ARE VARIABLE AND ARE SHOWN ELSEWHERE ON THE PLANS.
2. THE RIP-RAP SIZE AND MINIMUM DEPTH "H" FOR RIP-RAP TREATMENT ARE AS FOLLOWS.

RIP-RAP SIZE & MINIMUM DEPTH "H"	
H (In)	RIP-RAP SIZE (lbs)
12"	100
18"	300

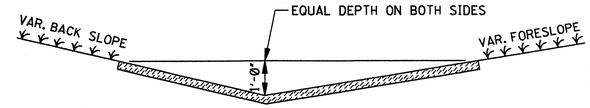

SOLID SOD TREATMENT

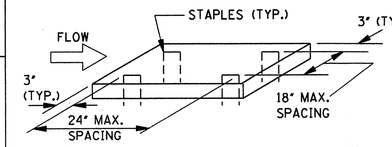

NOTE: SOLID SOD (STRIPS OR BLOCKS) ARE TO BE STAPLED, PINNED, PEGGED OR STAKED AT THE FOUR CORNERS OR AT THE MAXIMUM SPECIFIED SPACING.

GENERAL NOTE:

1. FOR LOCATION OF APPROPRIATE DITCH TREATMENTS, SEE PLAN SHEETS AS DENOTED BY THE FOLLOWING LEGEND OR AS DIRECTED BY THE ENGINEER:

- DITCH LINER
- BITUMINOUS TREATED ROVING
- SOLID SOD
- CONCRETE PAVED DITCH
- RIP-RAP

DATE	REVISION	BY

MISSISSIPPI DEPARTMENT OF TRANSPORTATION
ROADWAY DESIGN DIVISION
STANDARD PLAN

DETAILS OF TYPICAL DITCH TREATMENTS

ENGLISH

WORKING NUMBER DT-1

ISSUE DATE: OCTOBER 1, 1998

SHEET NUMBER 145

STATE	PROJECT NO.
MISS.	

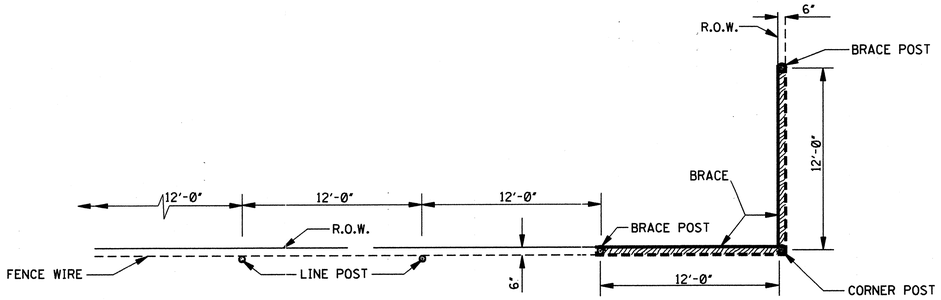

PLAN SHOWING PLACEMENT OF FENCE ALONG RIGHT OF WAY

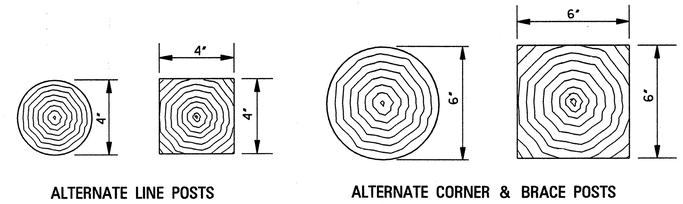

SECTIONS OF TIMBER POSTS

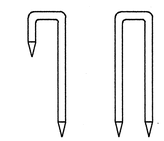

ALTERNATE TYPES OF STAPLES

NOTE: MIN. LENGTH - 1½".

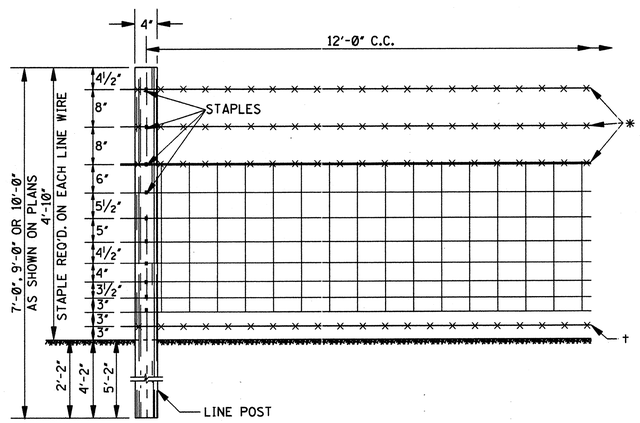

DETAILS OF LINE FENCE AND LINE POSTS

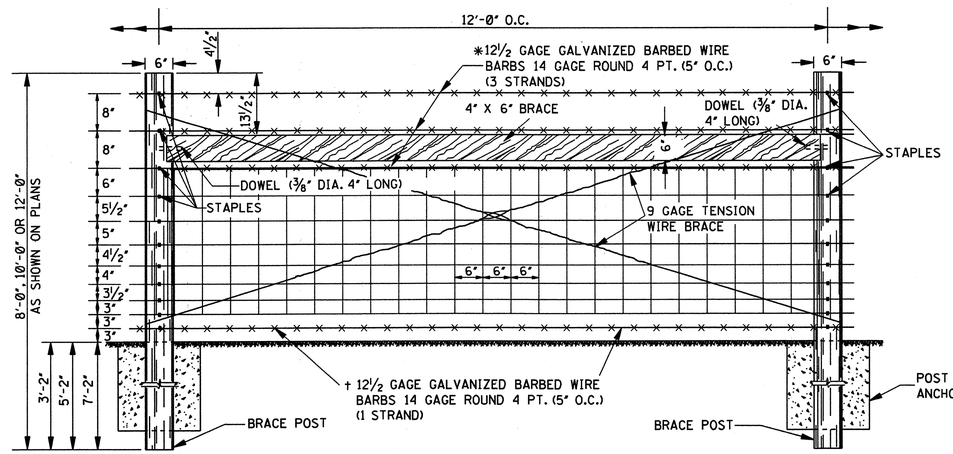

DETAIL OF BRACE BAY

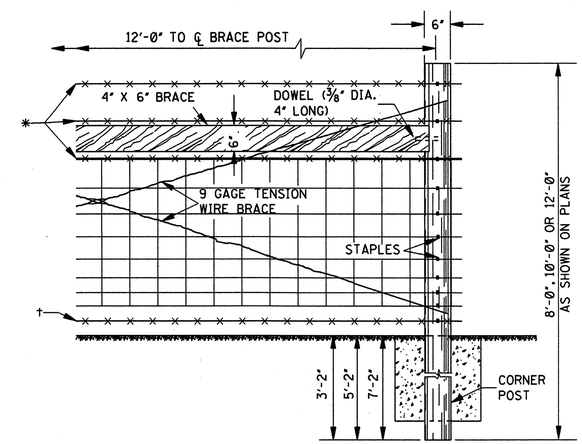

DETAIL OF CORNER BRACE

GENERAL NOTES:

1. LINE POST & BRACE POST DIMENSIONS ARE NOMINAL.
2. AT EACH END, CORNER OR GATE POST, EACH STRAND OF LINE WIRE SHALL BE WRAPPED AROUND THE POST AND SECURELY FASTENED BY WINDING THE END AROUND THE WIRE NEAR THE POST.
3. BRACE BAYS TO BE SPACED 500' APART ON TANGENTS AND 250' APART ON CURVES OR AS DIRECTED BY THE ENGINEER.
4. TENSION WIRES TO BE DOUBLED AND LOOPED, TIGHTENED TO DESIRED TENSION.
5. TENSION WIRES ARE NOT A PAY ITEM. COST TO BE ABSORBED IN UNIT PRICES OF OTHER ITEMS. FENCE WIRE AND TENSION WIRE TO BE STAPLED AT POINTS SHOWN.
6. WOVEN WIRE TO BE DESIGN NUMBER 832-6-11 (ASTM A 116).

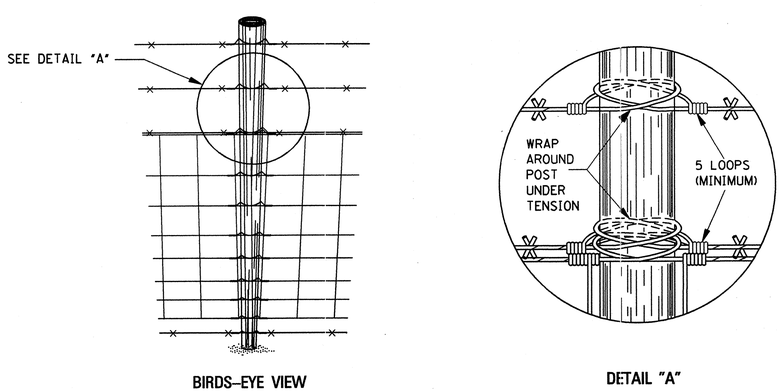

BIRDS-EYE VIEW

DETAIL "A"

SPLICING DETAILS AT POSTS

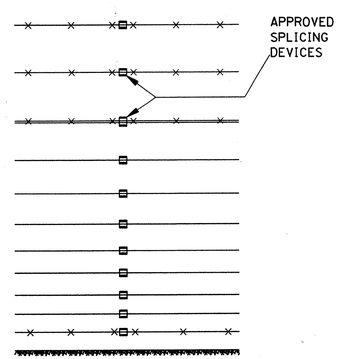

SPLICING DETAILS BETWEEN POSTS

NOTE: APPROVED SPLICING DEVICES FOR BARBED WIRE MAY IN ADDITION, BE PERMITTED AT OTHER LOCATIONS.

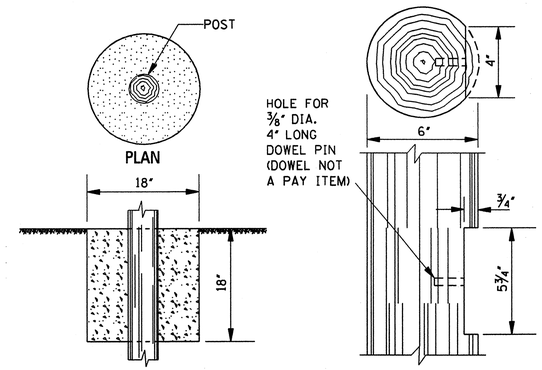

POST ANCHOR DETAILS

NOTE: TO BE USED AT BRACE AND CORNER POSTS AND ELSEWHERE OR AS DIRECTED BY THE ENGINEER.

DATE	REVISION	BY

MISSISSIPPI DEPARTMENT OF TRANSPORTATION
ROADWAY DESIGN DIVISION
STANDARD PLAN

FENCE: WOVEN WIRE TIMBER POSTS

ENGLISH

WORKING NUMBER WW-1

ISSUE DATE: OCTOBER 1, 1998

SHEET NUMBER 160

STATE	PROJECT NO.
MISS.	

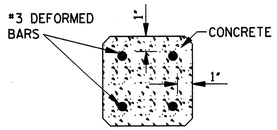

CROSS SECTION OF POSTS

NOTE: LINE POSTS TO BE 4" SQUARE; BRACE AND CORNER POSTS TO BE 6" SQUARE. LINE POSTS REINFORCED WITH 4- #3 DEFORMED BARS 6'-8", 8'-8" OR 9'-8" LONG. BRACE & CORNER POSTS REINFORCED WITH #3 DEFORMED BARS 7'-8", 9'-8" OR 11'-8" LONG. ALL POSTS TO BE CHAMFERED 1/2".

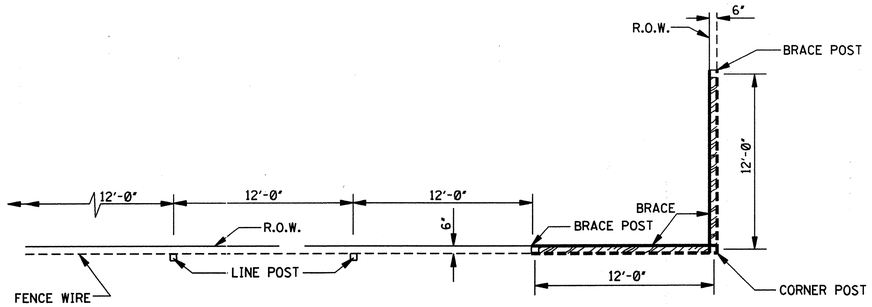

PLAN SHOWING PLACEMENT OF FENCE ALONG RIGHT OF WAY

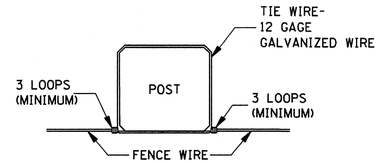

METHOD OF TYING FENCE WIRE TO POSTS

NOTE: TIE WIRE IS NOT A PAY ITEM. COST TO BE ABSORBED IN UNIT PRICES OF OTHER ITEMS. FENCE WIRE TO BE TIED AT ALL TIE NOTCHES.

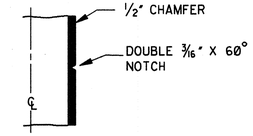

DETAIL OF TIE NOTCH

(ALL POSTS)

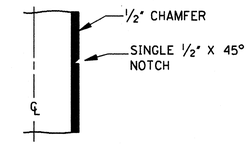

DETAIL OF TENSION WIRE NOTCH

(BRACE POSTS AND CORNER POSTS ONLY)

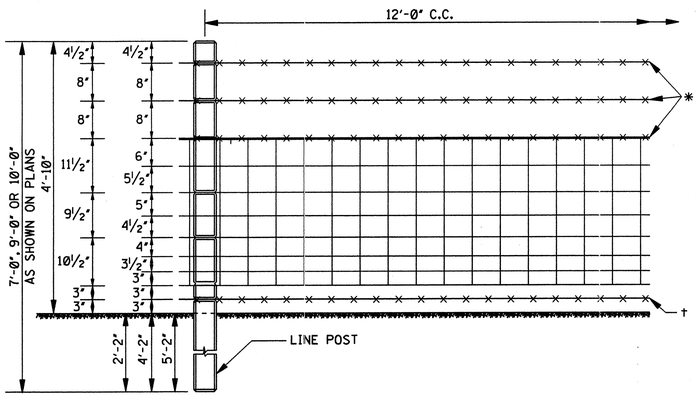

DETAILS OF LINE FENCE AND LINE POSTS

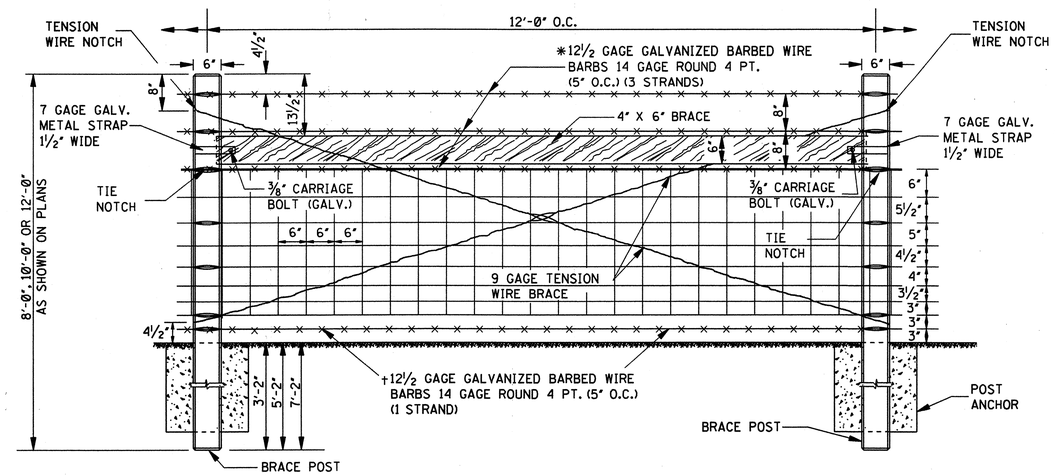

DETAIL OF BRACE BAY

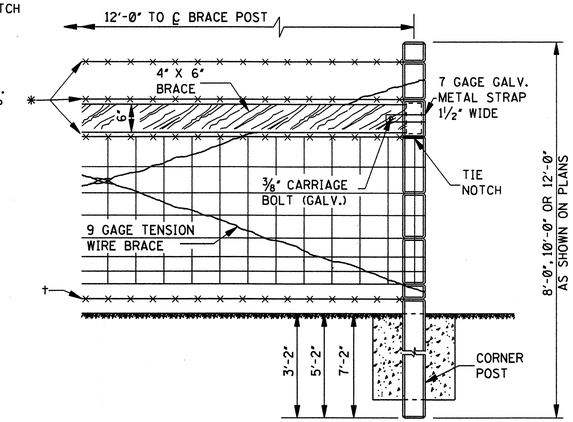

DETAIL OF CORNER BRACE

GENERAL NOTES:

1. THE NOTCHES ON CORNER POSTS TO BE ON ALL FOUR SIDES.
2. BRACE BAYS TO BE SPACED 500' APART ON TANGENTS AND 250' APART ON CURVES OR AS DIRECTED BY THE ENGINEER.
3. TENSION WIRES TO BE DOUBLED AND LOOPED, TIGHTENED TO DESIRED TENSION. TIE NOTCHES ON BRACE POSTS TO BE ON FRONT AND BACK. TENSION WIRE NOTCHES TO BE ON ONE SIDE. TENSION WIRES ARE NOT A PAY ITEM. COST TO BE ABSORBED IN UNIT PRICES OF OTHER ITEMS.
4. WOVEN WIRE TO BE DESIGN NUMBER 832-6-11 (ASTM A 116).
5. BRACE TIMBER DIMENSIONS ARE NOMINAL.

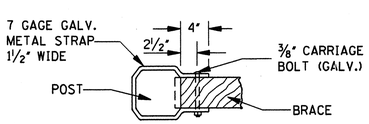

DETAIL OF FASTENER BRACE & END POST

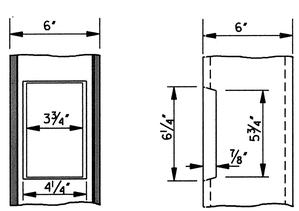

DETAIL OF BRACE JOINT

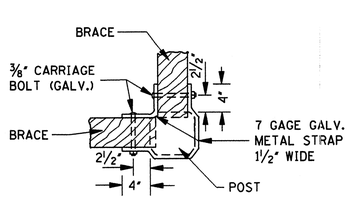

DETAIL OF FASTENER BRACE TO BRACE AT CORNER

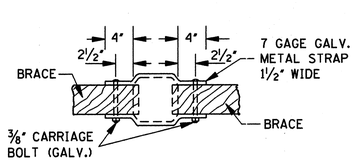

DETAIL OF FASTENER BRACE TO BRACE ON LINE

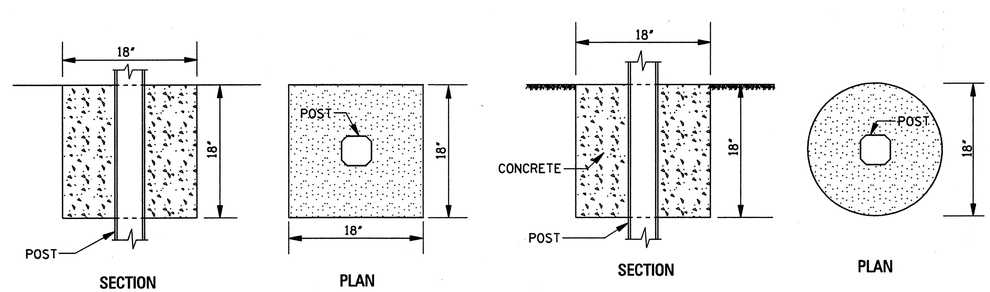

DETAIL OF POST ANCHOR

NOTE: TO BE USED AT BRACE AND CORNER POSTS AND ELSEWHERE OR AS DIRECTED BY THE ENGINEER.

DATE	REVISION	BY

MISSISSIPPI DEPARTMENT OF TRANSPORTATION
ROADWAY DESIGN DIVISION
STANDARD PLAN

FENCE: WOVEN WIRE CONCRETE POSTS

DEPARTMENT OF TRANSPORTATION MISSISSIPPI ENGLISH

WORKING NUMBER WW-2

ISSUE DATE: OCTOBER 1, 1998

SHEET NUMBER 161

STATE	PROJECT NO.
MISS.	

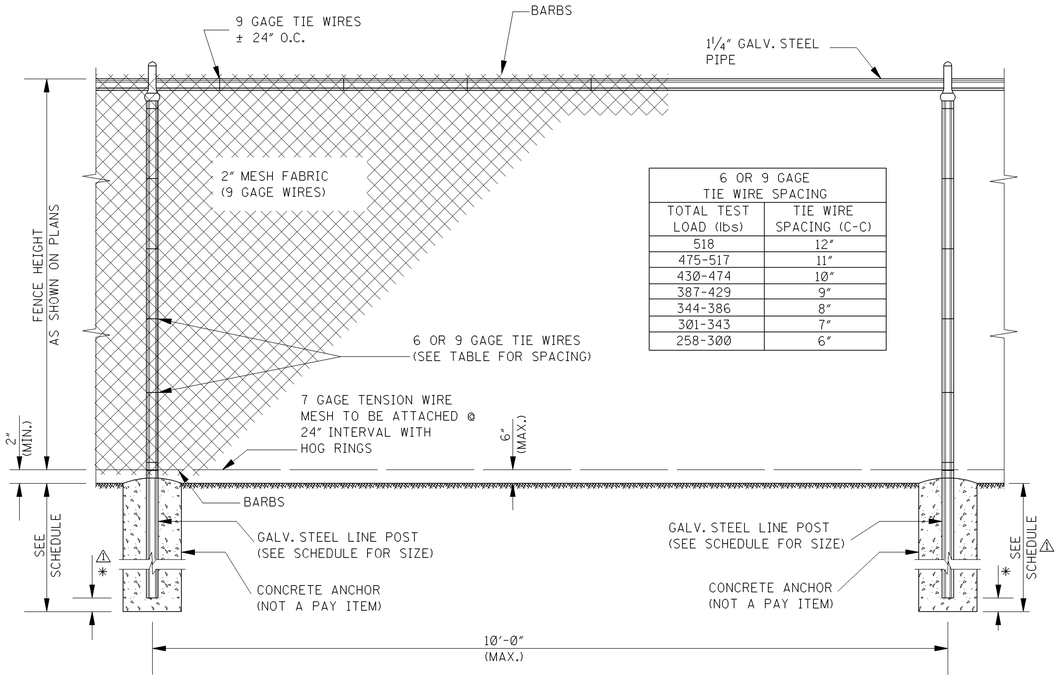

6 OR 9 GAGE TIE WIRE SPACING	
TOTAL TEST LOAD (lbs)	TIE WIRE SPACING (C-C)
518	12"
475-517	11"
430-474	10"
387-429	9"
344-386	8"
301-343	7"
258-300	6"

LINE BAY

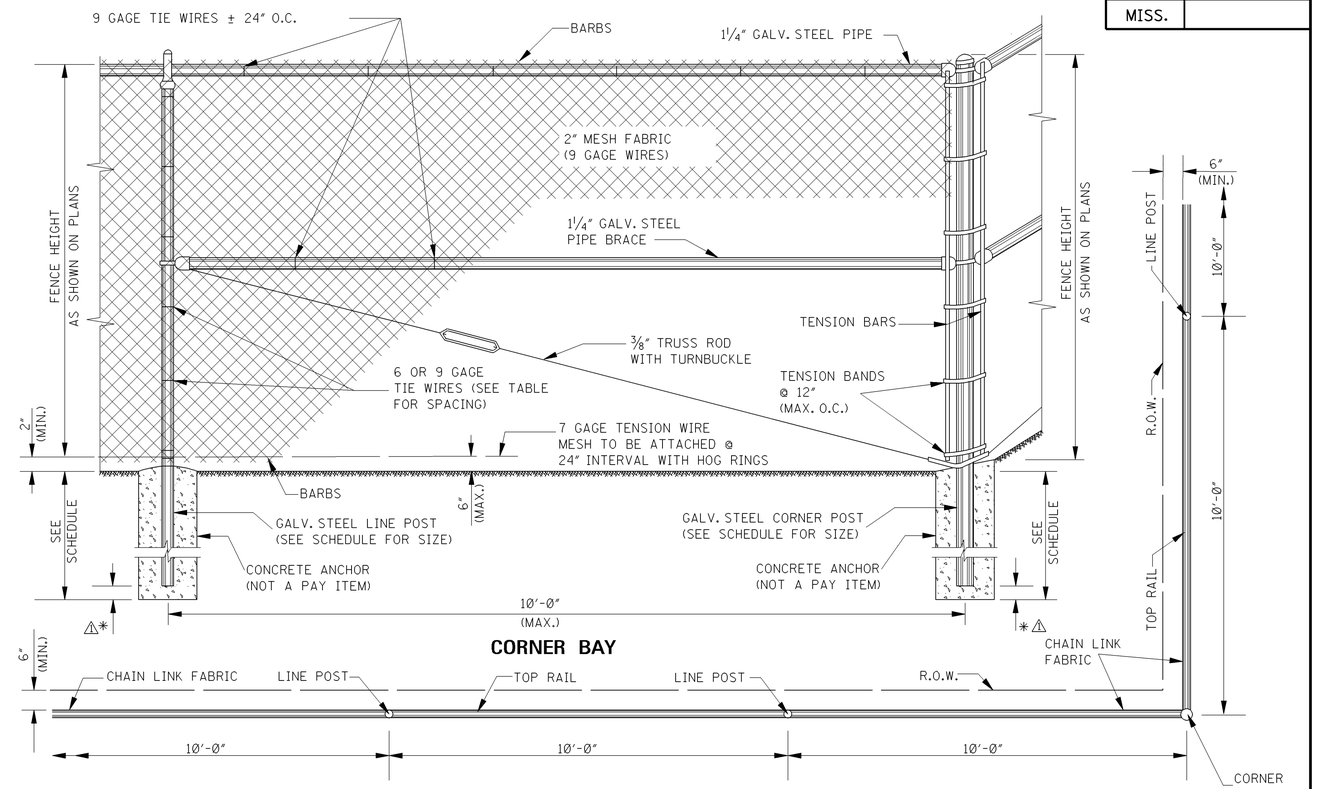

CORNER BAY

PLAN SHOWING PLACEMENT OF FENCE ALONG R.O.W.

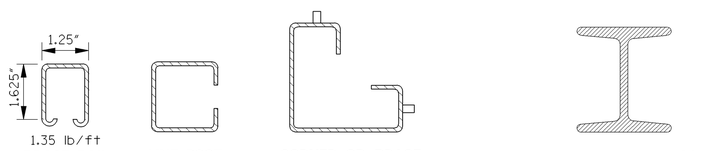

ALTERNATE TYPES OF BRACE RAIL, OR LINE, CORNER OR BRACE POST

NOTE: SIZE AS SHOWN ON SCHEDULE.

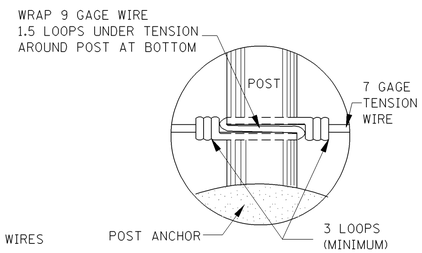

TENSION WIRE TIE DETAILS

⚠* = HOLE DEPTH - POST DEPTH

POST SCHEDULES							
FENCE HEIGHT	POST TYPES	MINIMUM POST SIZE			MIN. ANCHOR SIZE		
		ROUND	"H" BEAM	"C" BEAM	HOLE DIA.	HOLE DEPTH	POST DEPTH
		NPS (I.D.)	SIZE	SIZE			
LESS THAN 6'	LINE	1½"	2.250" X 1.625"	1.875" X 1.625"	7"	28"	22"
LESS THAN 6'	END, CORNER & BRACE	2"	-------	3.500" X 3.500"	10"	32"	28"
6' THRU 12'	LINE	2"	2.250" X 1.625"	2.250" X 1.700"	8"	38"	34"
6' THRU 12'	END, CORNER & BRACE	2½"	-------	3.500" X 3.500"	12"	44"	40"

GENERAL NOTES:

1. PIPE SIZES SHOWN FOR POSTS, BRACES AND RAILS ARE NOMINAL INSIDE DIAMETERS. ALL POSTS, BRACES AND RAILS SHALL CONFORM TO THE MISSISSIPPI DEPARTMENT OF TRANSPORTATION SPECIFICATIONS.
2. ⅜" TRUSS RODS ARE NOT REQUIRED WHEN CONNECTING LESS THAN FOUR (4) PANEL LENGTHS TO STRUCTURES.
3. THE FENCE SHALL BE GROUNDED IN ACCORDANCE WITH THE MISSISSIPPI DEPARTMENT OF TRANSPORTATION SPECIFICATIONS. COST TO BE ABSORBED IN OTHER PAY ITEMS.
4. CLASS I CHAIN LINK FENCE ONLY TO BE USED TO FENCE AREAS OFF THE RIGHT-OF-WAY (e.g., SEWAGE TREATMENT SYSTEMS, MAINTENANCE AREAS).

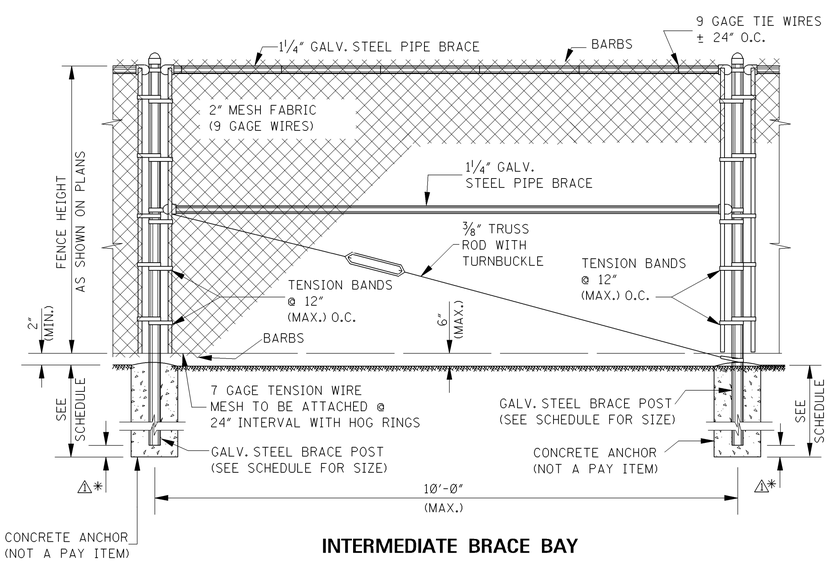

INTERMEDIATE BRACE BAY

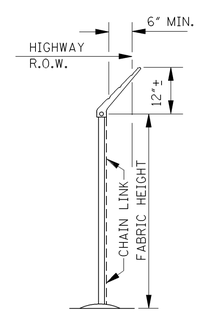

END ELEVATION

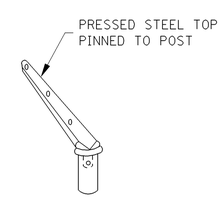

END & CORNER POST TOP

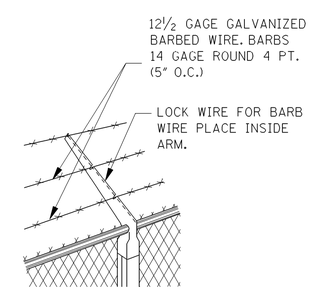

LINE POST TOP (VERTICAL ARMS WHEN DESIRED)

NOTE: ARMS WITH BARBED WIRE TO BE USED WHERE SHOWN ON PLANS.

DATE	REVISION	BY
3-01-02	REVISED DIMENSION	S.W.R.

MISSISSIPPI DEPARTMENT OF TRANSPORTATION
ROADWAY DESIGN DIVISION
STANDARD PLAN

FENCE: CHAIN LINK CLASS I

ENGLISH

WORKING NUMBER CL-1

ISSUE DATE: OCTOBER 1, 1998

SHEET NUMBER 162

STATE	PROJECT NO.
MISS.	

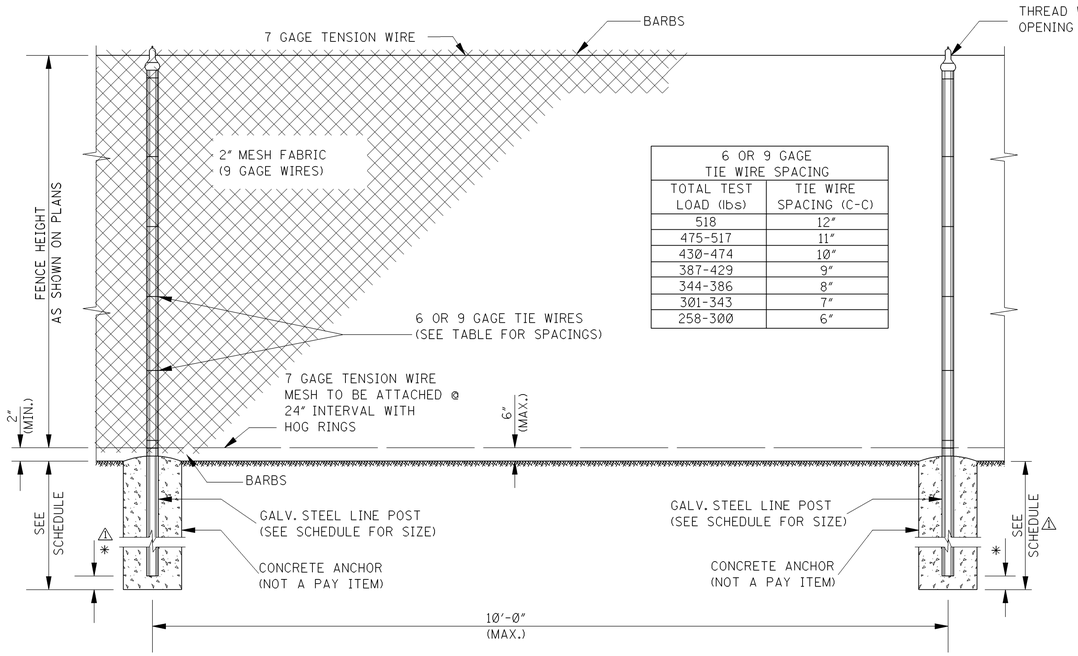

6 OR 9 GAGE TIE WIRE SPACING	
TOTAL TEST LOAD (lbs)	TIE WIRE SPACING (C-C)
518	12"
475-517	11"
430-474	10"
387-429	9"
344-386	8"
301-343	7"
258-300	6"

LINE BAY

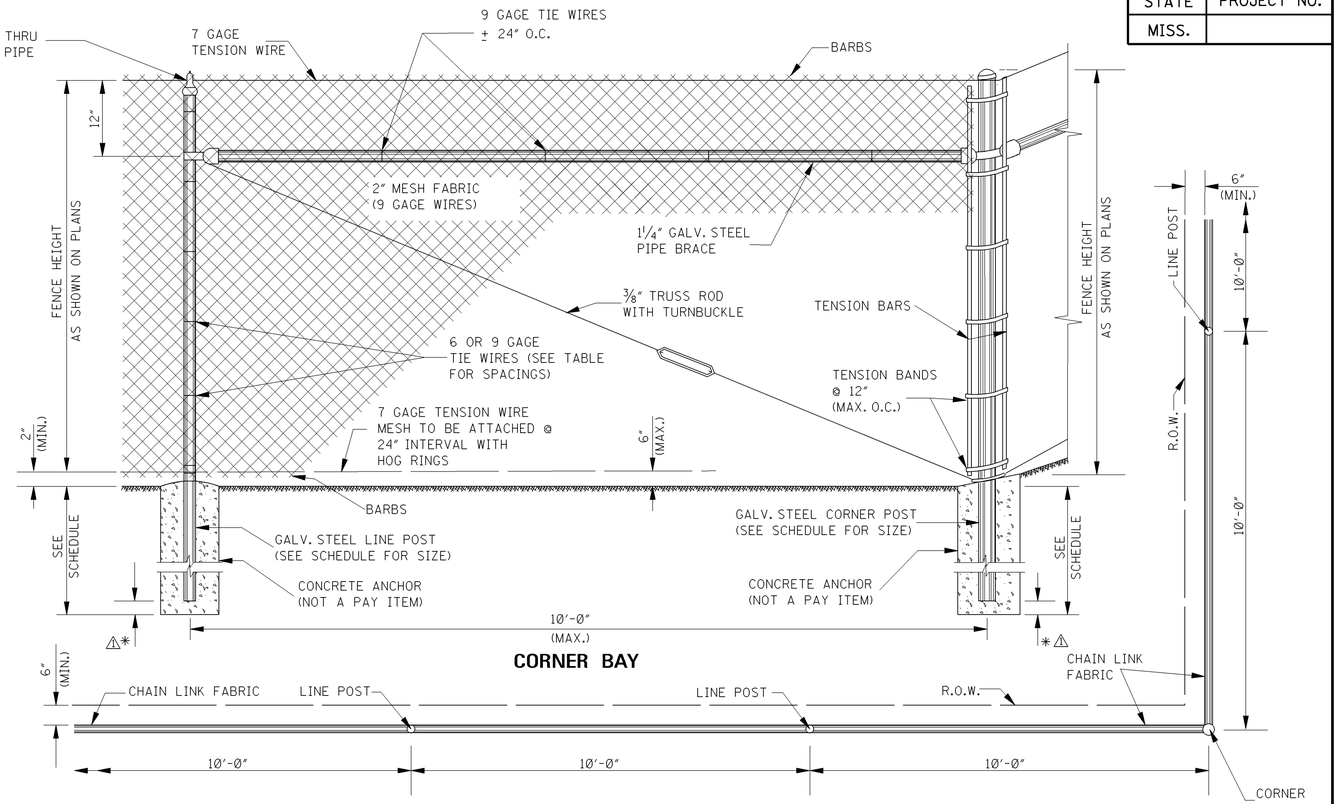

CORNER BAY

PLAN SHOWING PLACEMENT OF FENCE ALONG R.O.W.

⚠✱ = HOLE DEPTH - POST DEPTH

POST SCHEDULES							
FENCE HEIGHT	POST TYPES	MINIMUM POST SIZE			MIN. ANCHOR SIZE		
		ROUND	"H" BEAM	"C" BEAM	HOLE DIA.	HOLE DEPTH	POST DEPTH
		NPS (I.D.)	SIZE	SIZE			
LESS THAN 6'	LINE	1½"	2.250" X 1.625"	1.875" X 1.625"	7"	28"	22"
LESS THAN 6'	END, CORNER & BRACE	2"	-------	3.500" X 3.500"	10"	32"	28"
6' THRU 12'	LINE	2"	2.250" X 1.625"	2.250" X 1.700"	8"	38"	34"
6' THRU 12'	END, CORNER & BRACE	2½"	-------	3.500" X 3.500"	12"	44"	40"

GENERAL NOTES:

1. PIPE SIZES SHOWN FOR POSTS, BRACES AND RAILS ARE NOMINAL INSIDE DIAMETERS. ALL POSTS, BRACES AND RAILS SHALL CONFORM TO THE MISSISSIPPI DEPARTMENT OF TRANSPORTATION SPECIFICATIONS.
2. ⅜" TRUSS RODS ARE NOT REQUIRED WHEN CONNECTING LESS THAN FOUR (4) PANEL LENGTHS TO STRUCTURES.
3. THE FENCE SHALL BE GROUNDED IN ACCORDANCE WITH THE MISSISSIPPI DEPARTMENT OF TRANSPORTATION SPECIFICATIONS. COST TO BE ABSORBED IN OTHER PAY ITEMS.
4. MESH TO BE ATTACHED AT 24" INTERVALS TO TOP AND BOTTOM TENSION WIRE WITH HOG RINGS OR OTHER APPROVED METHODS.
5. WHERE A C-SECTION POST, WITH A "J" SLOT IS PROVIDED AS THE LINE POST, THE "J" SLOT MAY BE USED TO ATTACH THE TENSION WIRE TO THE TOP OF THE POST IN LIEU OF A POST TOP.

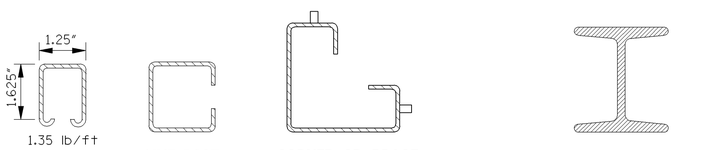

ALTERNATE TYPES OF BRACE RAIL, OR LINE, CORNER OR BRACE POST

NOTE: SIZE AS SHOWN ON SCHEDULE.

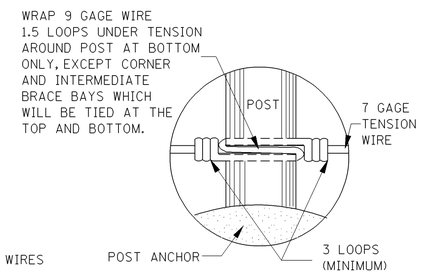

TENSION WIRE TIE DETAILS

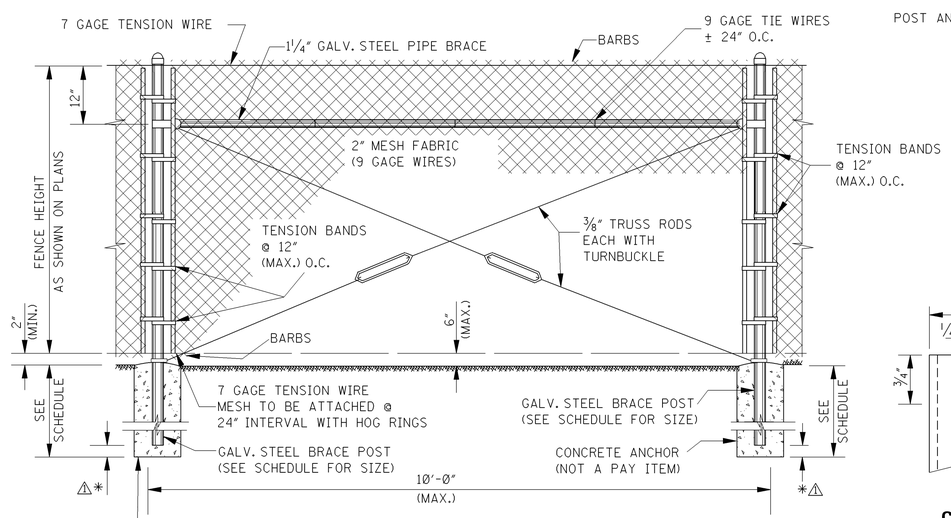

INTERMEDIATE BRACE BAY

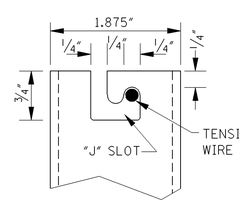

C-SECTION "J" SLOT DETAIL

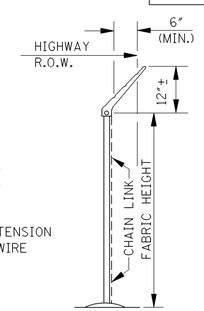

END ELEVATION

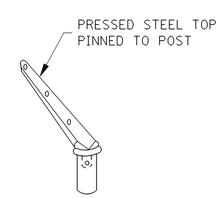

END & CORNER POST TOP

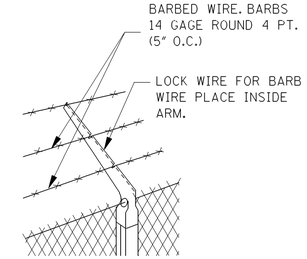

LINE POST TOP (VERTICAL ARMS WHEN DESIRED)

NOTE: ARMS WITH BARBED WIRE TO BE USED WHERE SHOWN ON PLANS.

DATE	REVISION	BY
3-01-02	REVISED DIMENSION	S.W.R.

MISSISSIPPI DEPARTMENT OF TRANSPORTATION
ROADWAY DESIGN DIVISION
STANDARD PLAN

FENCE: CHAIN LINK CLASS II

ENGLISH

WORKING NUMBER CL-2

SHEET NUMBER 163

ISSUE DATE: OCTOBER 1, 1998

STATE	PROJECT NO.
MISS.	

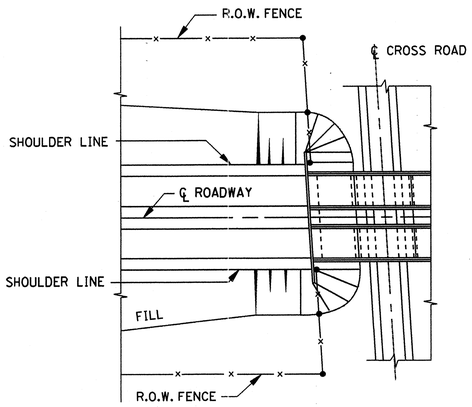

PLAN OF ROADWAY OVER

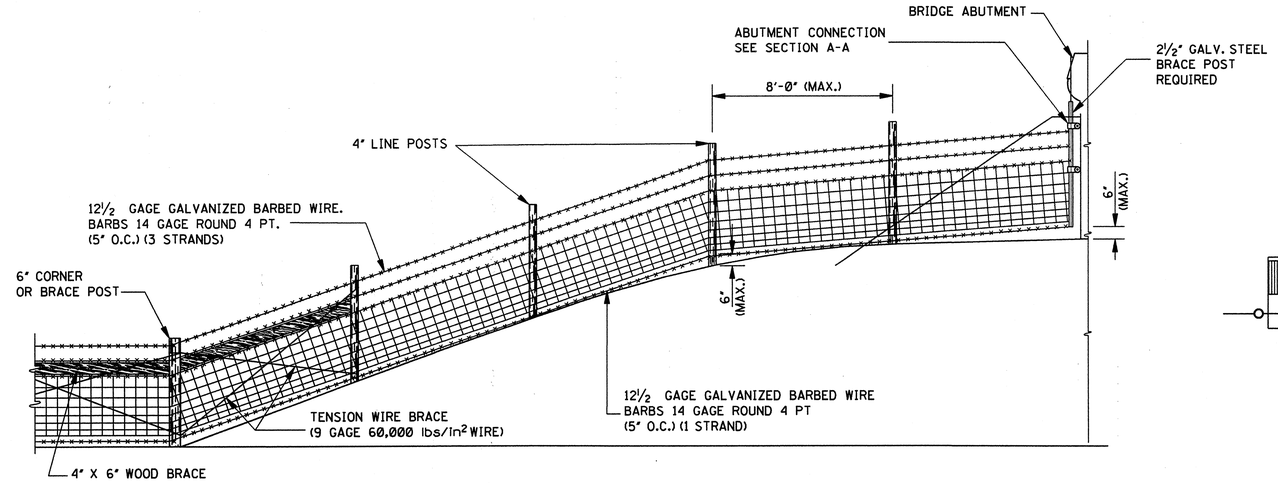

ELEVATION OF WOVEN WIRE TIMBER POSTS

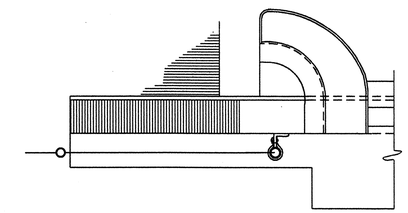

PLAN OF BRIDGE CONNECTION

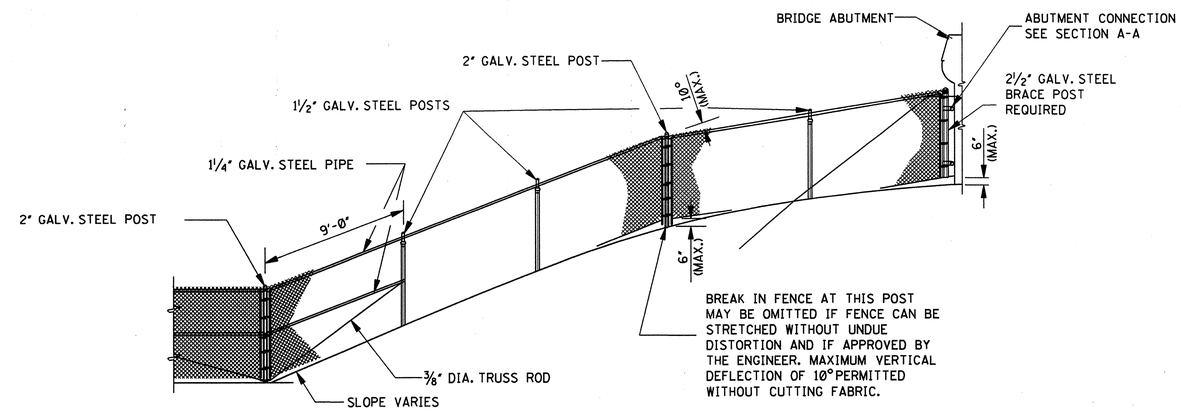

ELEVATION OF CHAIN LINK CLASS I

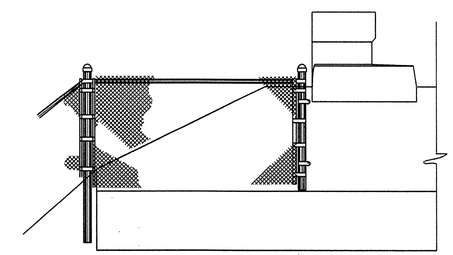

ELEVATION OF BRIDGE CONNECTION

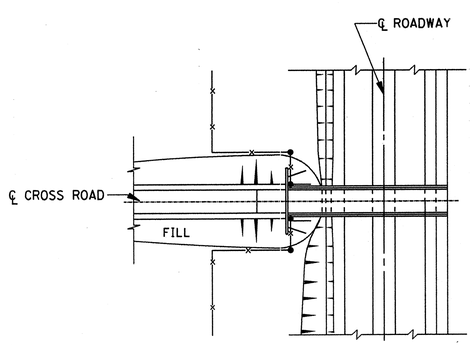

PLAN OF ROADWAY UNDER

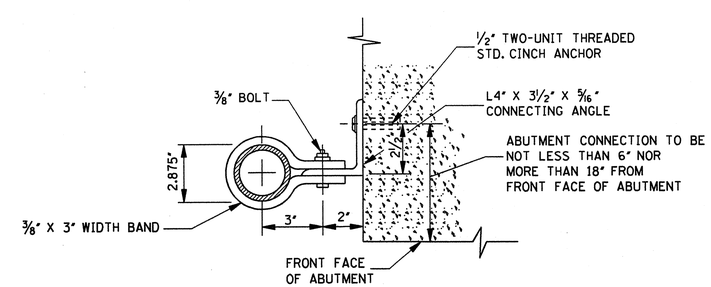

SECTION A–A ABUTMENT CONNECTION

NOTE: ALL MATERIAL FOR ABUTMENT
CONNECTION TO BE GALVANIZED.

GENERAL NOTES:

1. THESE INSTALLATION CONDITIONS ARE TYPICAL AND ARE NOT TO BE CONSTRUED AS REPRESENTATIVE OF ALL CONDITIONS WHICH WILL BE ENCOUNTERED. CONSTRUCTION WILL BE VARIED AS REQUIRED OR DIRECTED TO MEET FIELD CONDITIONS.
2. 2½" GALV. STEEL POST AND INCIDENTAL HARDWARE REQUIRED FOR CONNECTING FENCE TO BRIDGE ABUTMENT TO BE PAID FOR AS ONE 5'-0" STEEL BRACE POST.

DATE	REVISION	BY

MISSISSIPPI DEPARTMENT OF TRANSPORTATION
ROADWAY DESIGN DIVISION
STANDARD PLAN

FENCE:
TYPICAL INSTALLATION AT BRIDGES

ENGLISH

WORKING NUMBER
FI-1

ISSUE DATE: OCTOBER 1, 1998

SHEET NUMBER
164

STATE	PROJECT NO.
MISS.	

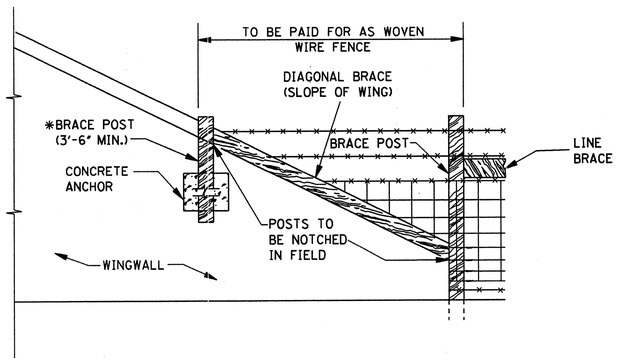

ELEVATION

* NOTE: TO BE PAID FOR AS ONE (1) 8'-0" LENGTH BRACE POST AND ONE (1) CONCRETE ANCHOR.

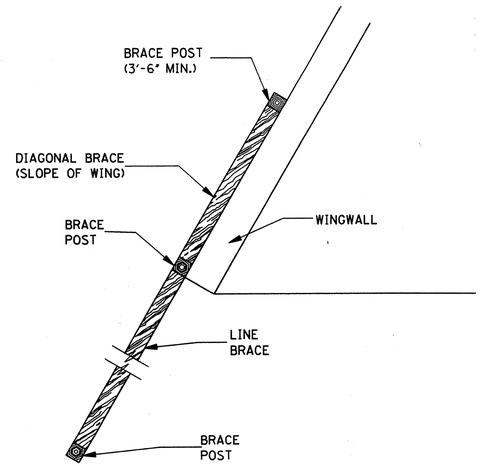

PLAN

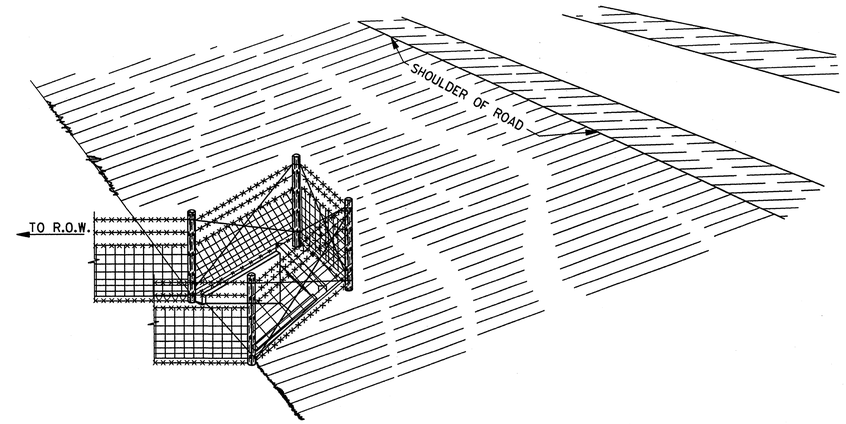

PERSPECTIVE OF FENCE UP AND OVER DRAINAGE STRUCTURE

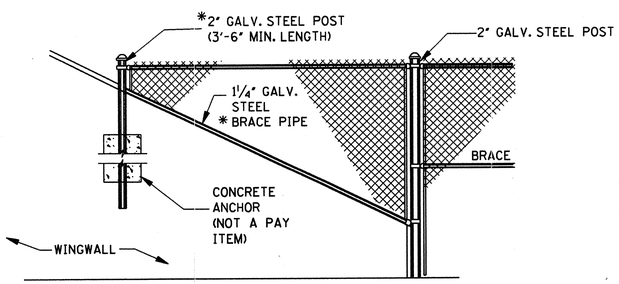

ELEVATION

*NOTES: 1. TO BE PAID FOR AS ONE 7'-0" LENGTH BRACE POST.
2. FOR USE WHEN DRAINAGE STRUCTURE HEIGHT IS 5'-0" OR GREATER AND WHEN IT IS NOT FEASIBLE TO GO UP AND OVER THE DRAINAGE STRUCTURE AS SHOWN ON THIS SHEET.

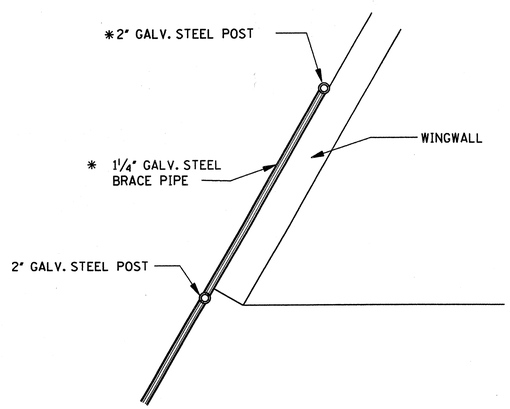

PLAN

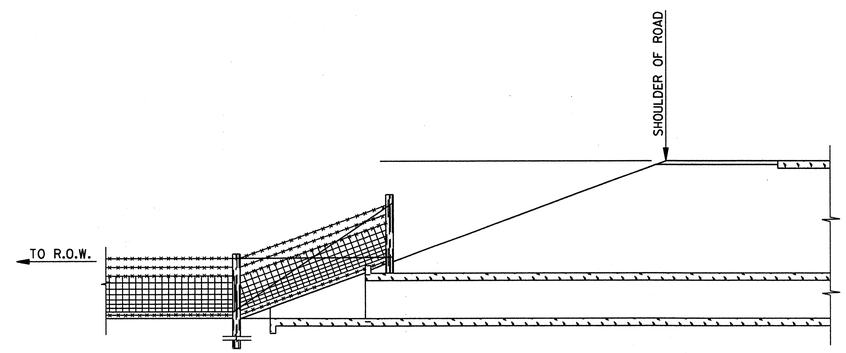

SECTIONAL ELEVATION OF FENCE UP AND OVER DRAINAGE STRUCTURE

NOTE: FOR USE WHEN THE ELEVATION OF THE FENCE POST TOP IS LOWER THAN THE ROADWAY SHOULDER AND WHEN THE NEAREST PORTION OF THE FENCE IS OUTSIDE THE CLEAR ZONE

DATE	REVISION	BY

MISSISSIPPI DEPARTMENT OF TRANSPORTATION
ROADWAY DESIGN DIVISION
STANDARD PLAN

FENCE: TYPICAL INSTALLATION AT DRAINAGE STRUCTURES

ENGLISH

WORKING NUMBER FI-2

ISSUE DATE: OCTOBER 1, 1998

SHEET NUMBER 165

STATE	PROJECT NO.
MISS.	

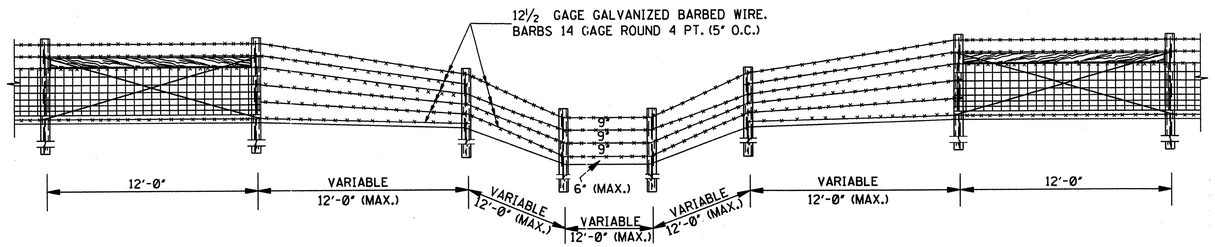

CROSSING TYPE I

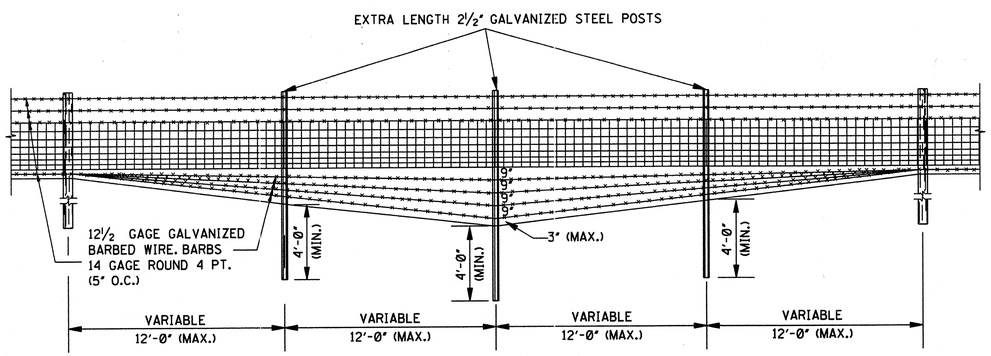

CROSSING TYPE II

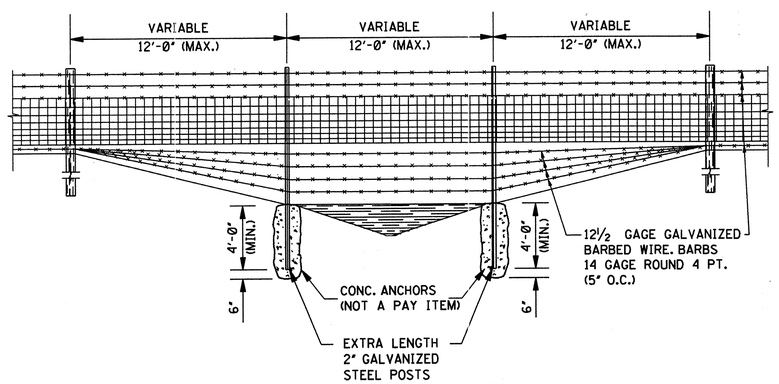

CROSSING TYPE III

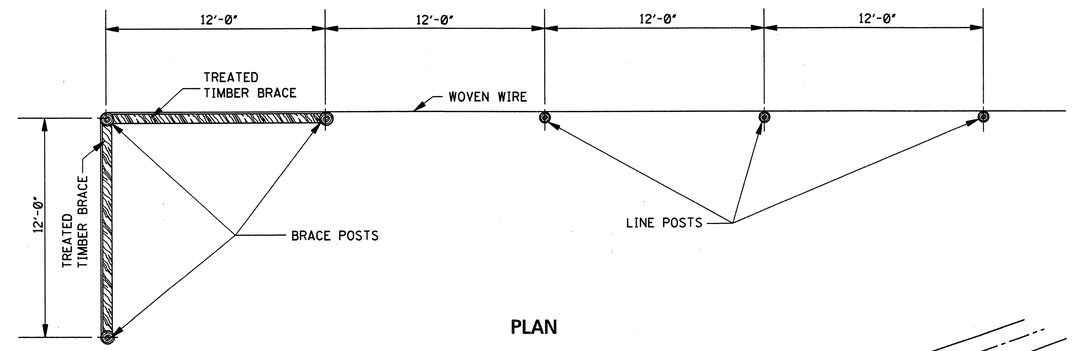

PLAN

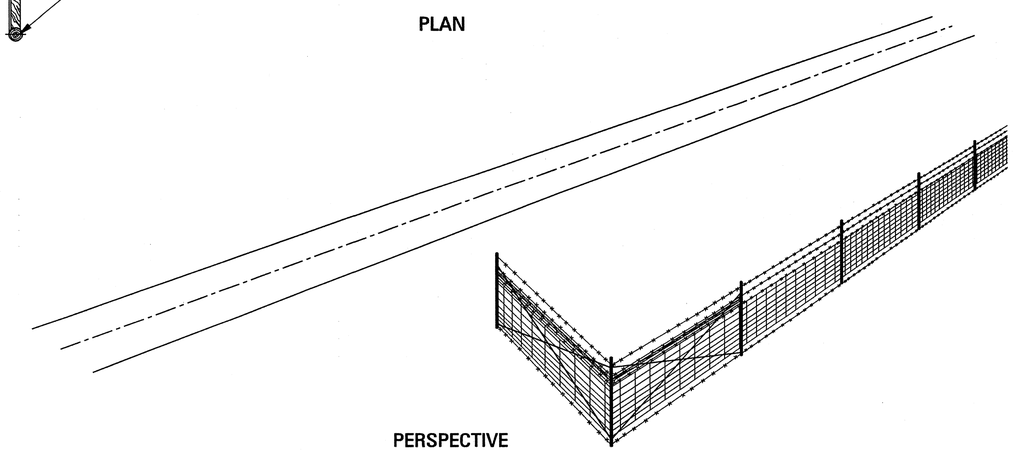

PERSPECTIVE

GENERAL NOTES:

1. THE FENCE SHALL BE TURNED IN AT THE POINT OF "NO ACCESS" AS SHOWN IF THE R.O.W. IS MORE THAN 12'-0" OUTSIDE THE CLEAR ZONE
2. IF THE R.O.W. IS LESS THAN 12'-0" OUTSIDE THE CLEAR ZONE, THE FENCE WILL BE ENDED AT THE POINT OF "NO ACCESS" WITHOUT TURNING IN.
3. THE ILLUSTRATIONS ARE SHOWN FOR WOVEN WIRE FENCE BUT ARE ALSO APPLICABLE TO CHAIN LINK FENCE.
4. THESE INSTALLATION CONDITIONS ARE TYPICAL AND ARE NOT TO BE CONSTRUED AS REPRESENTATIVE OF ALL CONDITIONS WHICH WILL BE ENCOUNTERED. CONSTRUCTION WILL BE VARIED AS REQUIRED OR DIRECTED TO MEET FIELD CONDITIONS.

DATE	REVISION	BY

MISSISSIPPI DEPARTMENT OF TRANSPORTATION
ROADWAY DESIGN DIVISION
STANDARD PLAN

FENCE: TYPICAL INSTALLATION AT DITCH CROSSINGS AND FENCE ENDINGS

DEPARTMENT OF TRANSPORTATION ENGLISH MISSISSIPPI

WORKING NUMBER FI-3

ISSUE DATE: OCTOBER 1, 1998

SHEET NUMBER 166

STATE	PROJECT NO.
MISS.	

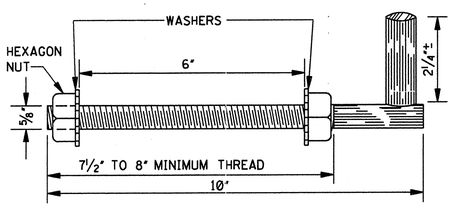

BOLT TYPE FOR CONCRETE POSTS

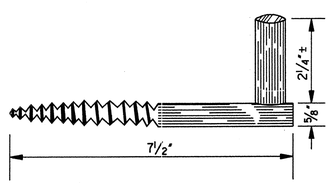

SCREW TYPE FOR WOOD POSTS

DETAILS OF SUGGESTED TYPES OF HOOK HINGE FOR GATES

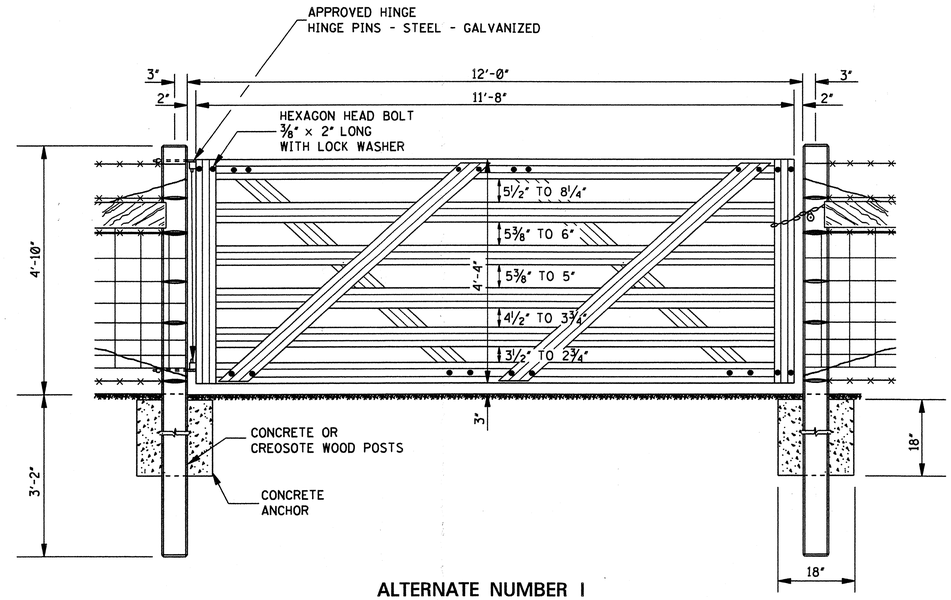

ALTERNATE NUMBER I

NOTE: GATE POSTS SIMILAR TO BRACE POSTS, BUT ADAPTED FOR USE WITH GATE HARDWARE.

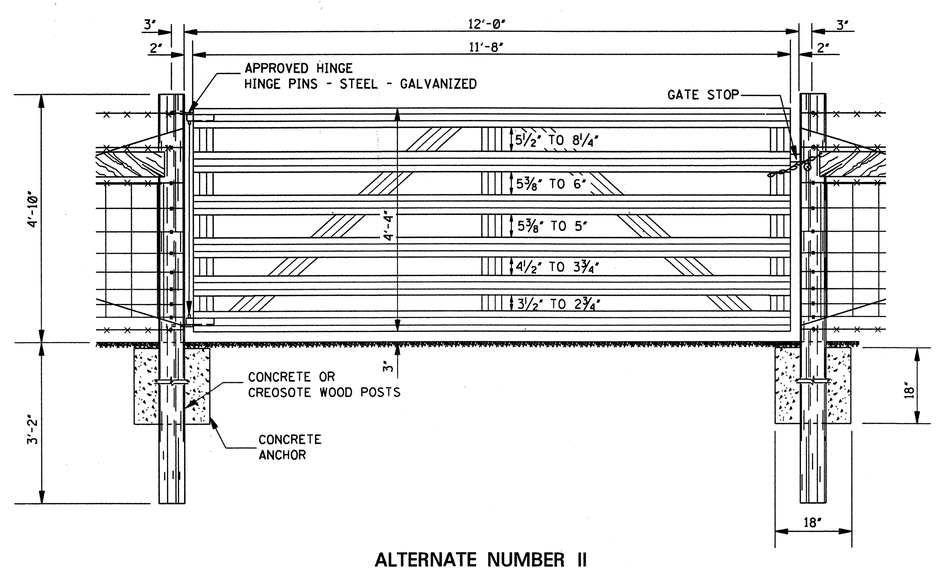

ALTERNATE NUMBER II

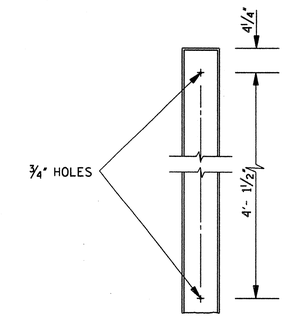

DETAIL OF BOLT HOLES IN CONCRETE POSTS

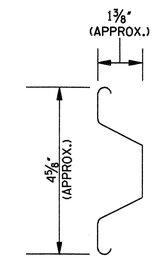

SECTION THRU SLAT

GENERAL NOTES:

1. EACH GATE TO INCLUDE ONE CHAIN 36" OF ⅜" HIGH TENSILE STRENGTH, CASE HARDENED AND ONE PADLOCK WITH KEY. ALL PADLOCKS TO BE KEYED ALIKE AND SHALL BE A MASTER NO. 5 OR EQUIVALENT (COST TO BE INCLUDED IN PRICE OF GATE).
2. EACH STRAND OF BARBED WIRE AND MESH WIRE SHALL BE SECURELY WRAPPED AND TIED AROUND GATE POSTS. IN ADDITION, ALL WIRE SHALL BE STAPLED TO WOOD POSTS.
3. THE DETAILS SHOWN SHOW SIX-HORIZONTAL SLATS, HOWEVER, DEPENDING UPON THE MANUFACTURER, FIVE-HORIZONTAL SLATS WILL BE ACCEPTED PROVIDED ALL OTHER CONTRACT REQUIREMENTS ARE MET.

DATE	REVISION	BY

MISSISSIPPI DEPARTMENT OF TRANSPORTATION
ROADWAY DESIGN DIVISION
STANDARD PLAN

FENCE: ALUMINUM OR GALVANIZED FERROUS METAL GATE

ENGLISH

WORKING NUMBER AG-1

ISSUE DATE: OCTOBER 1, 1998

SHEET NUMBER 167

STATE	PROJECT NO.
MISS.	

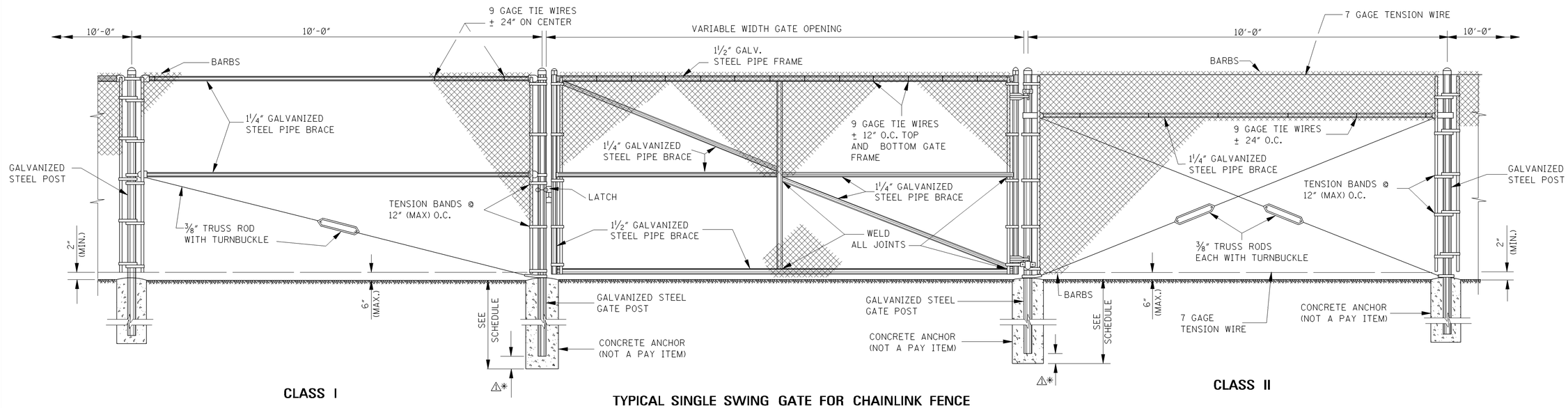

CLASS I

TYPICAL SINGLE SWING GATE FOR CHAINLINK FENCE

CLASS II

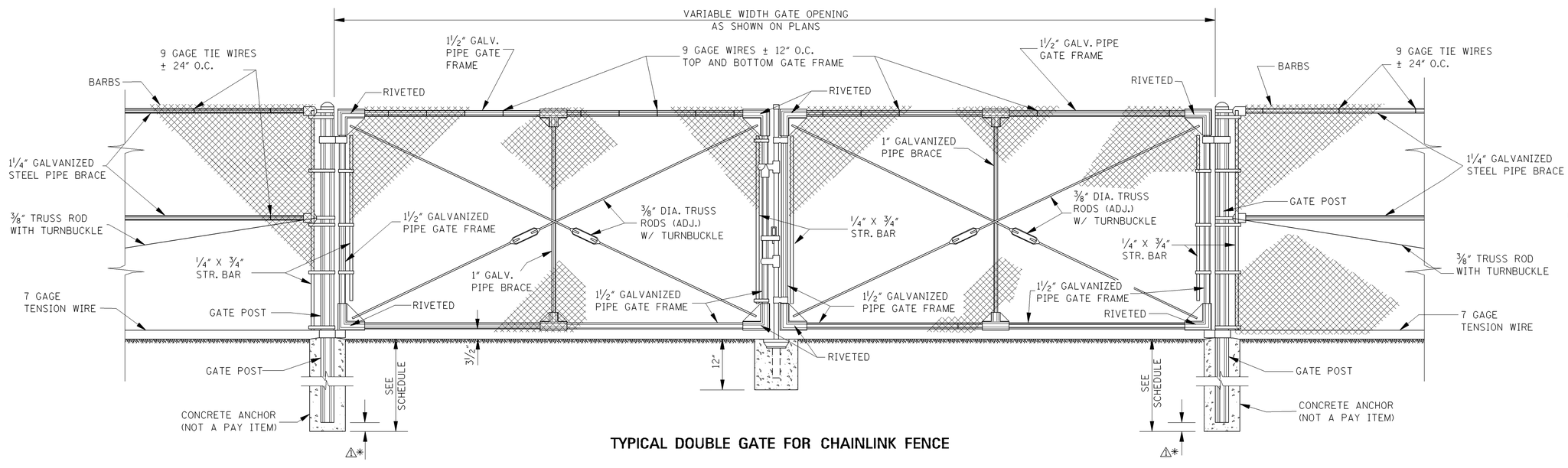

TYPICAL DOUBLE GATE FOR CHAINLINK FENCE

GENERAL NOTES:

1. CHAIN LINK FENCE TO BE 2″ MESH FABRIC (9 GAGE WIRES).
2. PIPE SIZES SHOWN FOR POSTS, BRACES AND RAILS ARE NOMINAL INSIDE DIAMETERS. ALL POSTS, BRACES AND RAILS SHALL CONFORM TO THE REQUIREMENTS OF THE MISSISSIPPI DEPARTMENT OF TRANSPORTATION STANDARD SPECIFICATIONS.
3. ⅜″ TRUSS RODS NOT REQUIRED WHEN CONNECTING LESS THAN 4 PANELS LENGTHS TO STRUCTURES.
4. MESH TO BE ATTACHED AT 24″ INTERVALS TO TOP & BOTTOM TENSION WIRE WITH HOG RINGS OR OTHER APPROVED METHODS.
5. THE FENCE SHALL BE GROUNDED IN ACCORDANCE WITH THE MISSISSIPPI DEPARTMENT OF TRANSPORTATION SPECIFICATIONS. COST TO BE ABSORBED IN OTHER PAY ITEMS.

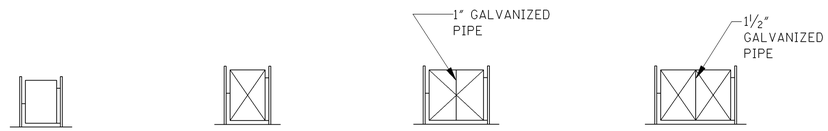

TYPE "A"	TYPE "B"	TYPE "C"	TYPE "D"
3′ & 4′ SGL. 6′ & 8′ DBL.	OVER 4′ TO 7′ SGL. OVER 8′ TO 14′ DBL.	OVER 7′ TO 11′ SGL. OVER 14′ TO 22′ DBL.	OVER 11′ TO 15′ SGL. OVER 22′ TO 30′ DBL.

TYPICAL FRAMEWORK SHOWING NUMBER OF BAYS IN GATE

⚠* = HOLE DEPTH - POST DEPTH

POST SCHEDULE						
GATE OPENING	POST TYPE & MIN. SIZE			MIN. ANCHOR SIZE		
	ROUND		"C" BEAM	HOLE DIA.	HOLE DEPTH	POST DEPTH
	SIZE (NPS)		SIZE			
UP TO 6′ SINGLE UP TO 12′ DOUBLE	2½″		3.50″ X 3.50″	12″	40″	34″
OVER 6′ TO 13′ SINGLE OVER 12′ TO 26′ DOUBLE	3½″			14″	42″	34″
OVER 13′ TO 18′ SINGLE OVER 26′ TO 36′ DOUBLE	6″			16″	46″	40″

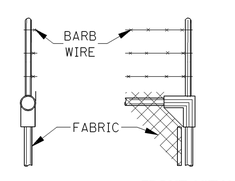

TOP GUARD DETAILS

DATE	BY	DIMENSION REVISION
3-01-02	S.W.R.	REVISED

MISSISSIPPI DEPARTMENT OF TRANSPORTATION
ROADWAY DESIGN DIVISION
STANDARD PLAN

FENCE: CHAIN LINK GATE

DEPARTMENT OF TRANSPORTATION ENGLISH MISSISSIPPI

WORKING NUMBER CLG-1

ISSUE DATE: OCTOBER 1, 1998

SHEET NUMBER 168

STATE	PROJECT NO.
MISS.	

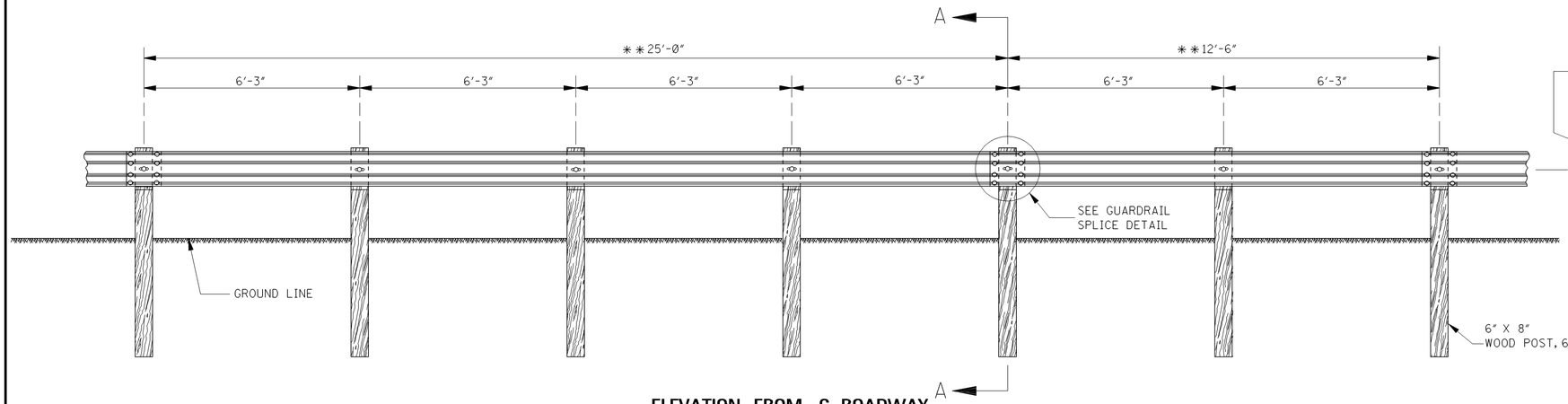

ELEVATION FROM ℄ ROADWAY

** NOTE: OPTIONAL BEAM LENGTHS.

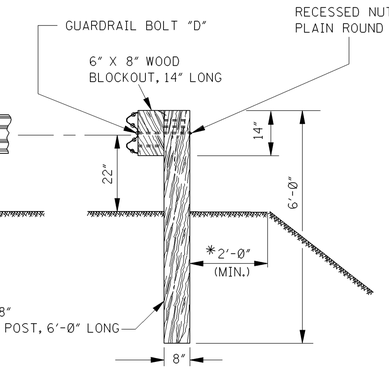

SINGLE-FACED BARRIER

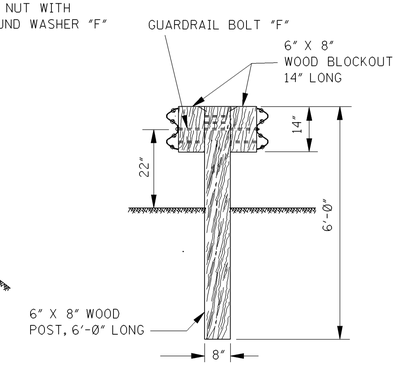

DOUBLE-FACED BARRIER

SECTION A-A

*NOTE: UNLESS SPECIFIED OTHERWISE ON THE PLANS.

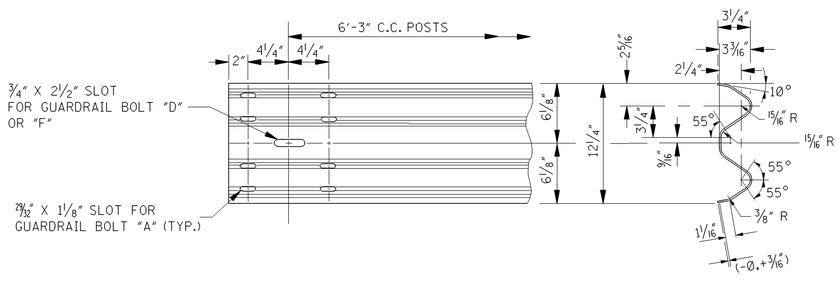

TYPICAL GUARDRAIL SECTION

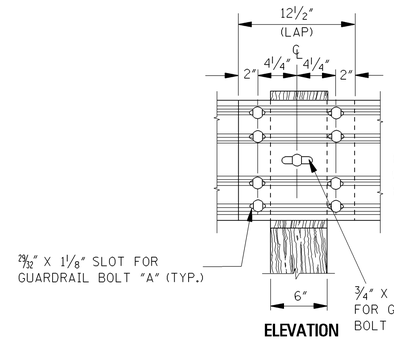

ELEVATION

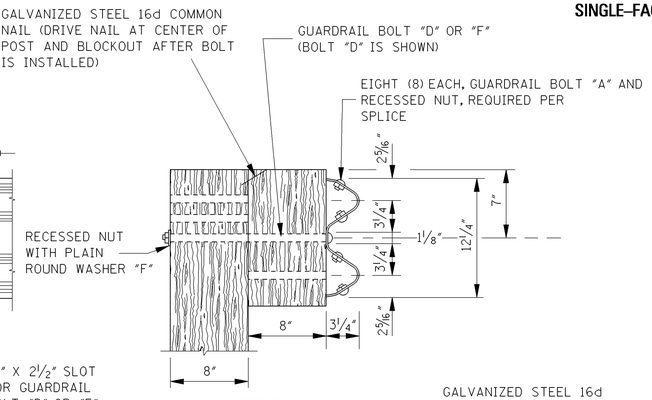

SECTION

GUARDRAIL SPLICE DETAIL

GENERAL NOTES:

1. GUARDRAIL SHALL MEET THE REQUIREMENTS OF AASHTO M 180, CLASS A, TYPE 1 UNLESS OTHERWISE DESIGNATED.
2. GUARDRAIL SHALL BE SINGLE FACED UNLESS OTHERWISE DESIGNATED.
3. GUARDRAIL SECTIONS SHALL BE LAPPED IN THE DIRECTION OF TRAFFIC FLOW FOR THE LANE NEAREST THE GUARDRAIL. THE ONLY EXCEPTION NOTED IS THAT GUARDRAIL IS TO BE LAPPED FOR APPROACHING TRAFFIC ON A BRIDGE WITH 2-WAY TRAFFIC.
4. ALL WOOD POSTS AND BLOCKOUTS SHALL BE TREATED TIMBER IN ACCORDANCE WITH MISSISSIPPI DEPARTMENT OF TRANSPORTATION STANDARD SPECIFICATIONS.
5. FOR OTHER DETAILS OF POSTS, POST ACCESSORIES, FASTENERS & RAIL ELEMENTS, SEE AASHTO-AGC-ARTBA JOINT TASK FORCE NO. 13, TITLED "A GUIDE TO STANDARDIZED HIGHWAY BARRIER HARDWARE," LATEST EDITION.
6. △ OTHER POSTS AND/OR BLOCKOUTS THAT HAVE MET THE REQUIREMENTS OF THE LATEST INDUSTRY GUIDELINES AND HAVE RECEIVED LETTERS OF APPROVAL FROM THE FEDERAL HIGHWAY ADMINISTRATION AND MISSISSIPPI DEPARTMENT OF TRANSPORTATION MAY BE USED IN LIEU OF THE POST AND BLOCKOUT SHOWN ON THIS STANDARD.

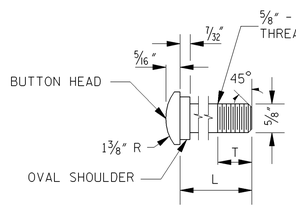

GUARDRAIL BOLT

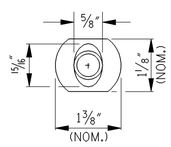

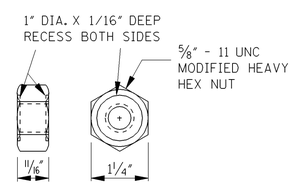

RECESSED NUT

GUARDRAIL BOLTS		
BOLT	L	T (MIN.)
"A"	1 1/4"	1"
"D"	18"	4"
* "E"	20"	4"
"F"	25"	4"

NOTES:

1. ALL GUARDRAIL BOLTS ARE 5/8" - 11 UNC THREAD PITCH.
2. IF ANY BOLT EXTENDS MORE THAN 1/4" FROM THE NUT, THE BOLT SHOULD BE TRIMMED BACK.
3. * GUARDRAIL BOLT "E" IS USED FOR SINGLE-FACED BARRIER WITH 10" X 10" WOOD POST AND 6" X 8" WOOD BLOCKOUT.

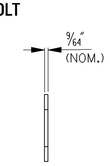

PLAIN ROUND WASHER "F"

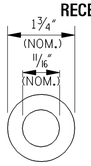

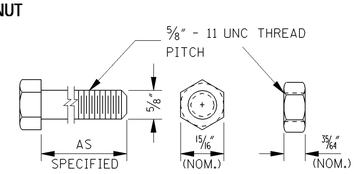

HEX NUT AND BOLT "F"

FASTENER DETAILS

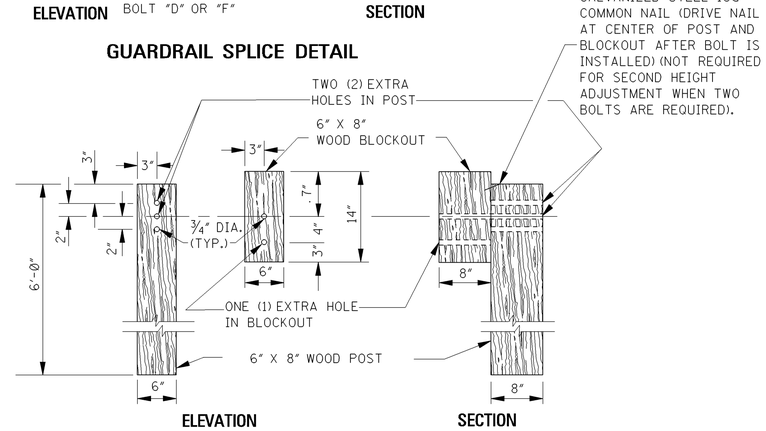

ELEVATION

SECTION

DETAILS OF ADJUSTABLE HEIGHT BLOCKOUT ASSEMBLY

NOTES:

1. ON INITIAL INSTALLATION, THE BLOCKOUT SHALL BE ATTACHED TO THE BOTTOM HOLE IN THE POST, OTHER HOLES IN THE POST AND BLOCKOUT ARE FOR FUTURE 2" HEIGHT ADJUSTMENT WHEN THE ROADWAY IS RESURFACED.
2. FOR THE SECOND HEIGHT ADJUSTMENT, ONE (1) HEX NUT AND BOLT "F", 18" LONG FOR SINGLE-FACED BARRIER OR 25" LONG FOR DOUBLE-FACED BARRIER, WITH TWO (2) PLAIN ROUND WASHERS "F", ONE (1) UNDER HEAD AND ONE (1) UNDER NUT, ARE REQUIRED PER POST IN ADDITION TO THE STANDARD GUARDRAIL BOLT AND RECESSED NUT.
3. HOLE DETAILS ARE REQUIRED ON ALL WOOD POSTS AND BLOCKOUTS.
4. WOOD POSTS AND BLOCKOUTS ARE FABRICATED FROM 6" X 8" TREATED TIMBER UNLESS SPECIFIED OTHERWISE ON THE PLANS.
5. ALL HOLES IN BOTH POSTS AND BLOCKOUTS ARE 3/4" IN DIAMETER.

DATE	REVISION	BY
3-01-02	ADDED NOTE	S.W.R.

△

MISSISSIPPI DEPARTMENT OF TRANSPORTATION
ROADWAY DESIGN DIVISION
STANDARD PLAN

GUARDRAIL: "W" BEAM (WOOD POSTS)

ENGLISH

WORKING NUMBER GR-1

SHEET NUMBER 180

ISSUE DATE: OCTOBER 1, 1998

STATE	PROJECT NO.
MISS.	

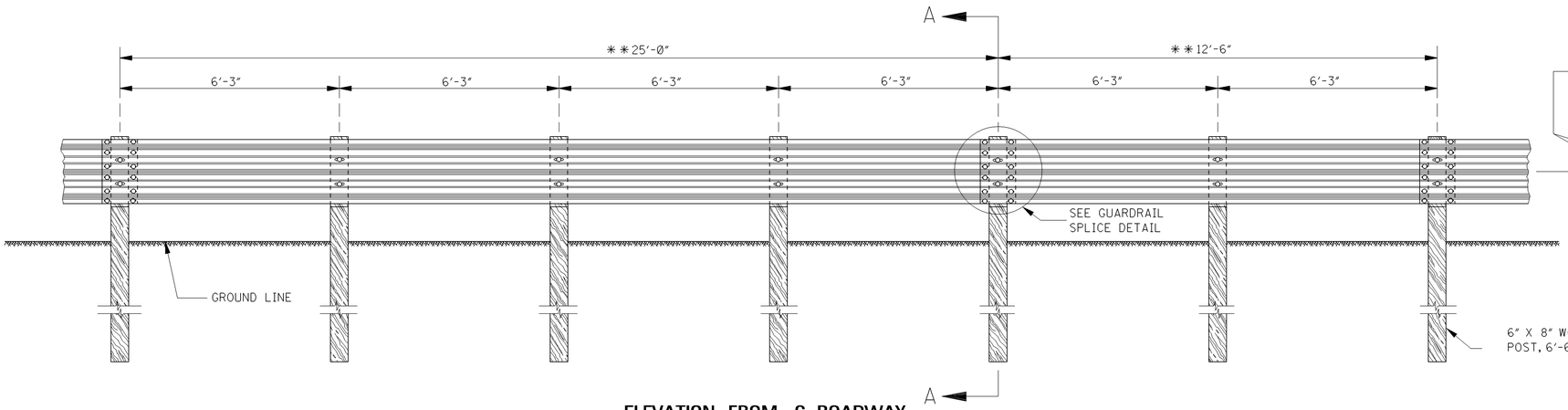

ELEVATION FROM ℄ ROADWAY

**NOTE: OPTIONAL BEAM LENGTHS.

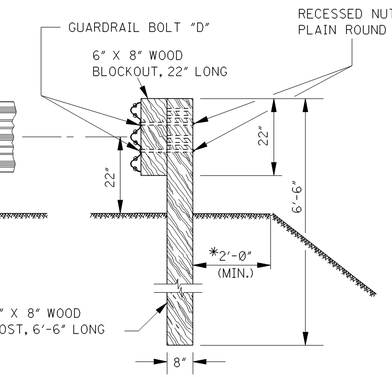

SINGLE-FACED BARRIER

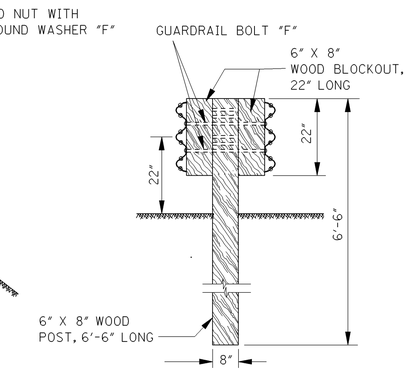

DOUBLE-FACED BARRIER

SECTION A–A

*NOTE: UNLESS SPECIFIED OTHERWISE ON THE PLANS.

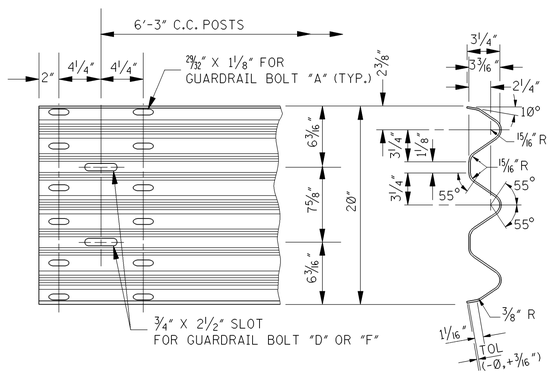

TYPICAL GUARDRAIL SECTION

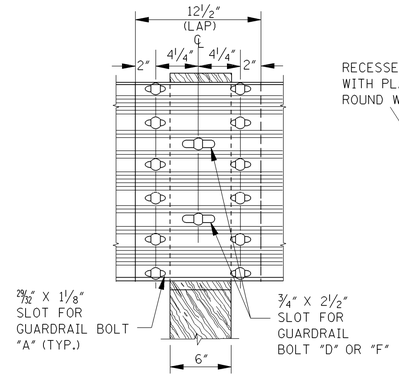

ELEVATION

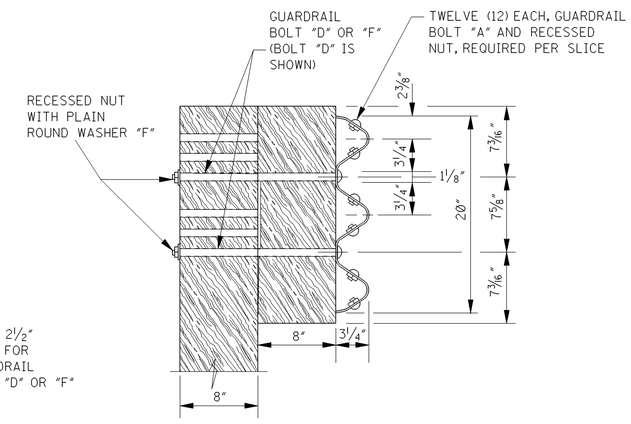

SECTION

GUARDRAIL SPLICE DETAIL

GENERAL NOTES:

1. GUARDRAIL SHALL MEET THE REQUIREMENTS OF AASHTO M 180, CLASS A, TYPE 1 UNLESS OTHERWISE DESIGNATED.
2. GUARDRAIL SHALL BE SINGLE FACED UNLESS OTHERWISE DESIGNATED.
3. GUARDRAIL SECTIONS SHALL BE LAPPED IN THE DIRECTION OF TRAFFIC FLOW FOR THE LANE NEAREST THE GUARDRAIL. THE ONLY EXCEPTION NOTED IS THAT GUARDRAIL IS TO BE LAPPED FOR APPROACHING TRAFFIC ON A BRIDGE WITH 2-WAY TRAFFIC.
4. ALL WOOD POSTS AND BLOCKOUTS SHALL BE TREATED TIMBER IN ACCORDANCE WITH MISSISSIPPI DEPARTMENT OF TRANSPORTATION STANDARD SPECIFICATIONS.
5. FOR FASTENER DETAILS NOT FOUND ON THIS SHEET, SEE SHEET GR-1.
6. FOR OTHER DETAILS OF POSTS, POST ACCESSORIES, FASTENERS & RAIL ELEMENTS, SEE AASHTO-AGC-ARTBA JOINT TASK FORCE NO. 13, TITLED "A GUIDE TO STANDARDIZED HIGHWAY BARRIER HARDWARE," LATEST EDITION.
7. △1 OTHER POSTS AND/OR BLOCKOUTS THAT HAVE MET THE REQUIREMENTS OF THE LATEST INDUSTRY GUIDELINES AND HAVE RECEIVED LETTERS OF APPROVAL FROM THE FEDERAL HIGHWAY ADMINISTRATION AND MISSISSIPPI DEPARTMENT OF TRANSPORTATION MAY BE USED IN LIEU OF THE POST AND BLOCKOUT SHOWN ON THIS STANDARD.

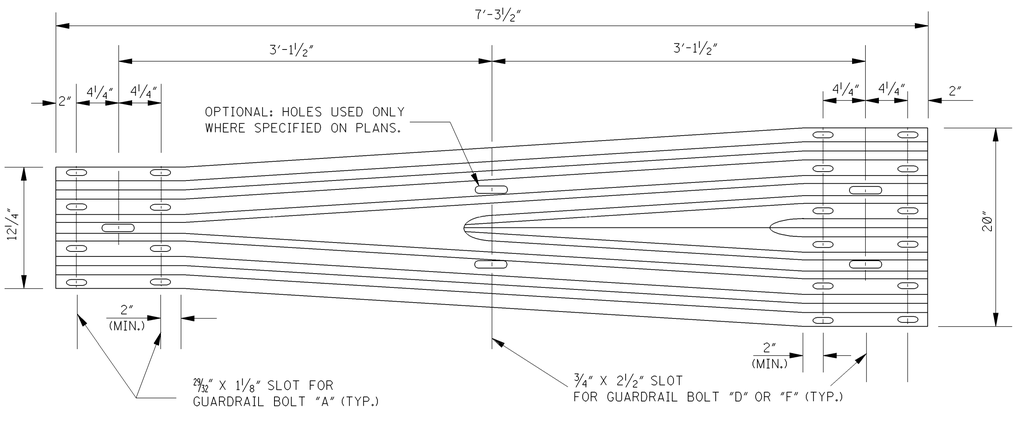

"W" THRIE–BEAM TRANSITION SECTION

NOTE: THE CROSS-SECTIONAL DIMENSIONS FOR THE "W" AND THRIE BEAM ENDS OF THE TRANSITION SECTION ARE THE SAME AS THEIR RESPECTIVE TYPICAL GUARDRAIL SECTIONS.

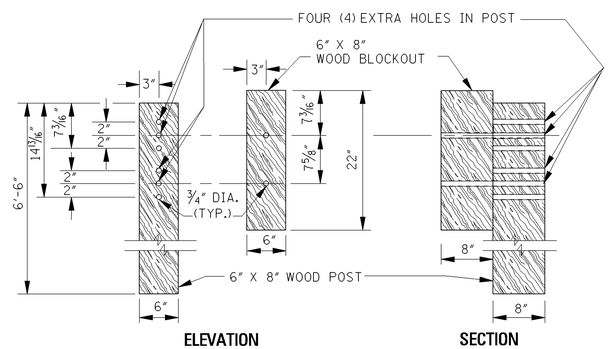

ELEVATION **SECTION**

DETAILS OF ADJUSTABLE HEIGHT BLOCKOUT ASSEMBLY

NOTES:

1. ON INITIAL INSTALLATION, THE TOP OF THE BLOCKOUT SHALL BE FLUSH WITH THE TOP OF THE POST. THE ADDITIONAL HOLES IN THE POST AND BLOCKOUT ARE FOR FUTURE 2" HEIGHT ADJUSTMENTS WHEN THE ROADWAY IS RESURFACED.
2. HOLE DETAILS ARE REQUIRED ON ALL WOOD POSTS AND BLOCKOUTS.
3. WOOD POSTS AND BLOCKOUTS ARE FABRICATED FROM 6" X 8" TREATED TIMBER UNLESS SPECIFIED OTHERWISE ON THE PLANS.
4. ALL HOLES IN BOTH POSTS AND BLOCKOUTS ARE ¾" IN DIAMETER.

DATE	REVISION	BY
3-01-02	ADDED NOTE	S.W.R.

MISSISSIPPI DEPARTMENT OF TRANSPORTATION
ROADWAY DESIGN DIVISION
STANDARD PLAN

GUARDRAIL: THRIE BEAM (WOOD POSTS)

ENGLISH

WORKING NUMBER GR-1A

ISSUE DATE: OCTOBER 1, 1998

SHEET NUMBER 181

STATE	PROJECT NO.
MISS.	

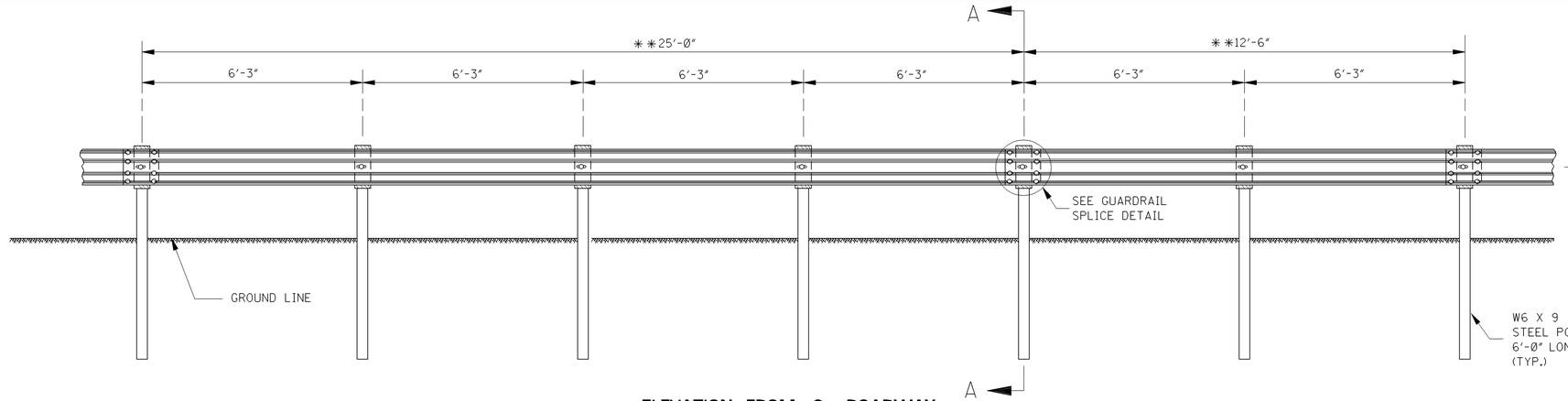

ELEVATION FROM ℄ ROADWAY

** NOTE: OPTIONAL BEAM LENGTHS.

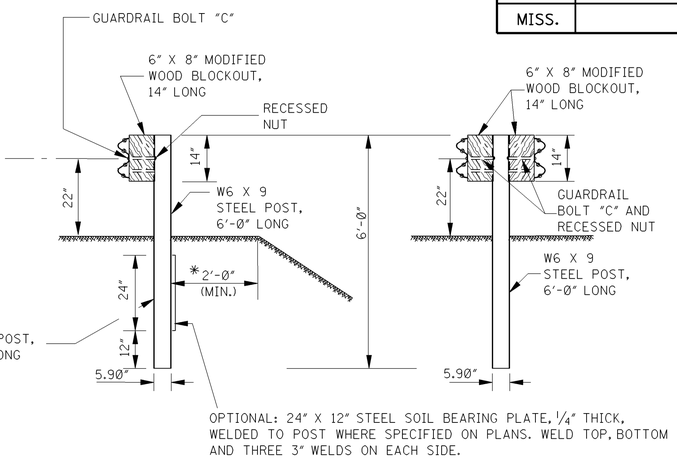

SINGLE-FACED BARRIER **DOUBLE-FACED BARRIER**

SECTION A–A

* NOTE: UNLESS SPECIFIED OTHERWISE ON THE PLANS.

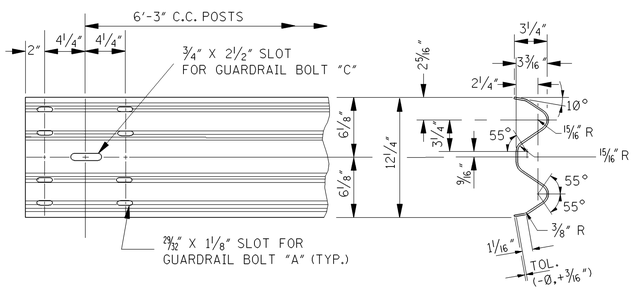

TYPICAL GUARDRAIL SECTION

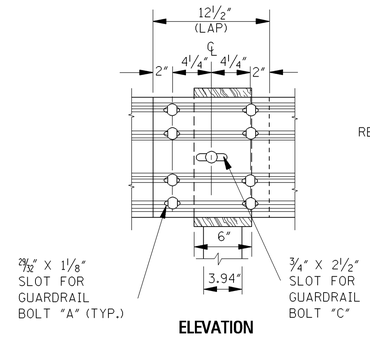

ELEVATION

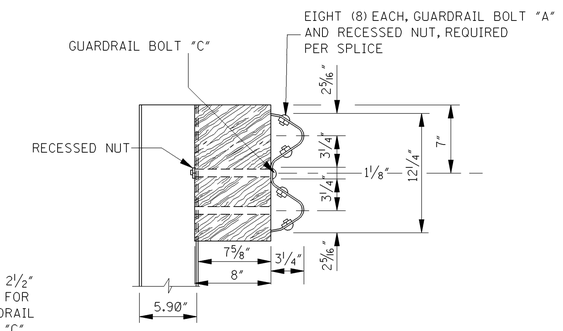

SECTION

GUARDRAIL SPLICE DETAIL

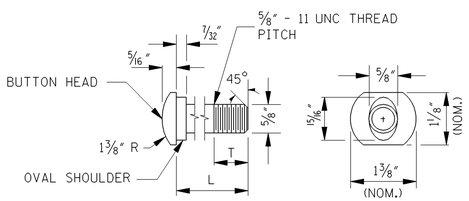

GUARDRAIL BOLT

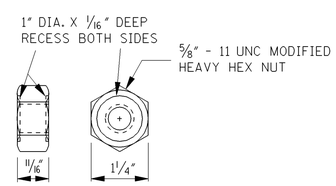

RECESSED NUT

GUARDRAIL BOLTS		
BOLT	L	T (MIN.)
"A"	1 1/4"	1"
"B"	2"	1 3/4"
"C"	10"	4"

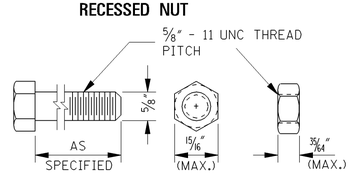

HEX NUT AND BOLT "F"

NOTES:

1. ALL GUARDRAIL BOLTS ARE 5/8" - 11 UNC THREAD PITCH.
2. IF ANY BOLT EXTENDS MORE THAN 1/4" FROM THE NUT, THE BOLT SHOULD BE TRIMMED BACK.

FASTENER DETAILS

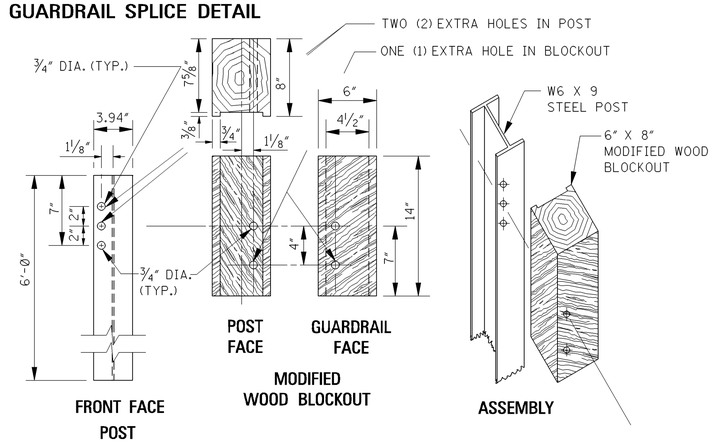

DETAILS OF ADJUSTABLE HEIGHT BLOCKOUT ASSEMBLY

NOTES:

1. ON INITIAL INSTALLATION, THE MODIFIED WOOD BLOCKOUT SHALL BE FASTENED TO THE BOTTOM HOLE IN THE STEEL POST. OTHER HOLES IN THE STEEL POST AND THE MODIFIED WOOD BLOCKOUT ARE FOR FUTURE 2" HEIGHT ADJUSTMENTS WHEN THE ROADWAY IS RESURFACED.
2. AN ADDITIONAL GUARDRAIL BOLT "C" AND RECESSED NUT IS REQUIRED FOR THE SECOND HEIGHT ADJUSTMENT.
3. HOLE DETAILS ARE REQUIRED ON ALL STEEL POSTS AND MODIFIED WOOD BLOCKOUTS.
4. STEEL POSTS ARE FABRICATED FROM W6 X 9 STRUCTURAL STEEL SHAPES.
5. MODIFIED WOOD BLOCKOUTS ARE FABRICATED FROM 6" X 8" TREATED TIMBER UNLESS SPECIFIED OTHERWISE ON THE PLANS.
6. ALL HOLES IN BOTH STEEL POSTS AND MODIFIED WOOD BLOCKOUTS ARE 3/4" IN DIAMETER.

GENERAL NOTES:

1. GUARDRAIL SHALL MEET THE REQUIREMENTS OF AASHTO M 180, CLASS A, TYPE 1 UNLESS OTHERWISE DESIGNATED.
2. GUARDRAIL SHALL BE SINGLE FACED UNLESS OTHERWISE DESIGNATED.
3. GUARDRAIL SECTIONS SHALL BE LAPPED IN THE DIRECTION OF TRAFFIC FLOW FOR THE LANE NEAREST THE GUARDRAIL. THE ONLY EXCEPTION NOTED IS THAT GUARDRAIL IS TO BE LAPPED FOR APPROACHING TRAFFIC ON A BRIDGE WITH 2-WAY TRAFFIC.
4. STEEL POSTS SHALL CONFORM TO AASHTO M 183/M 183M OR ASTM A 769/A 769M (EXCEPT ULTRASONIC TESTING). THEY SHALL BE GALVANIZED IN ACCORDANCE WITH AASHTO M 111 EXCEPT WHEN CORROSION RESISTANT STEEL IS REQUIRED IN WHICH CASE POSTS SHALL CONFORM TO AASHTO M 222/M 222M AND SHALL NOT BE PAINTED OR GALVANIZED. NO PUNCHING, DRILLING OR CUTTING WILL BE PERMITTED AFTER GALVANIZING EXCEPT FOR HOLES TO MOUNT GUARDRAIL DELINEATORS.
5. ALL MODIFIED WOOD BLOCKOUTS SHALL BE TREATED TIMBER IN ACCORDANCE WITH MISSISSIPPI DEPARTMENT OF TRANSPORTATION STANDARD SPECIFICATIONS.
6. FOR OTHER DETAILS OF POSTS, POST ACCESSORIES, FASTENERS & RAIL ELEMENTS, SEE AASHTO-AGC-ARTBA JOINT TASK FORCE NO. 13, TITLED "A GUIDE TO STANDARDIZED HIGHWAY BARRIER HARDWARE," LATEST EDITION.
7. △ OTHER POSTS AND/OR BLOCKOUTS THAT HAVE MET THE REQUIREMENTS OF THE LATEST INDUSTRY GUIDELINES AND HAVE RECEIVED LETTERS OF APPROVAL FROM THE FEDERAL HIGHWAY ADMINISTRATION AND MISSISSIPPI DEPARTMENT OF TRANSPORTATION MAY BE USED IN LIEU OF THE POST AND BLOCKOUT SHOWN ON THIS STANDARD.

DATE	REVISION	BY
3-01-02	ADDED NOTE △	S.W.R.

MISSISSIPPI DEPARTMENT OF TRANSPORTATION
ROADWAY DESIGN DIVISION
STANDARD PLAN

GUARDRAIL: "W" BEAM (STEEL POSTS)

ENGLISH

WORKING NUMBER GR-1B

SHEET NUMBER 182

ISSUE DATE: OCTOBER 1, 1998

STATE	PROJECT NO.
MISS.	

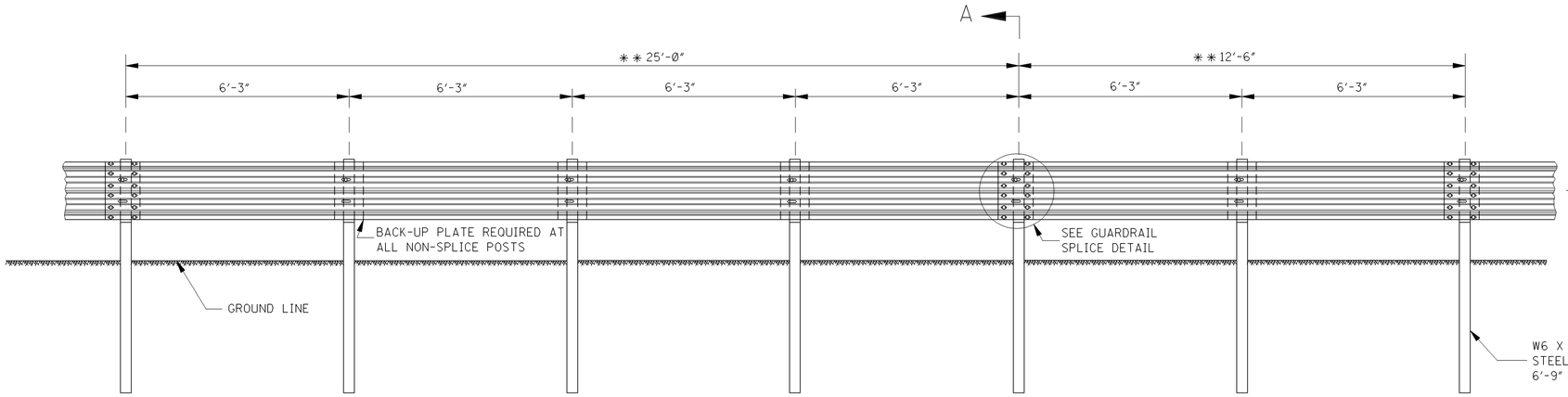

ELEVATION FROM ℄ ROADWAY

** NOTE: OPTIONAL BEAM LENGTHS.

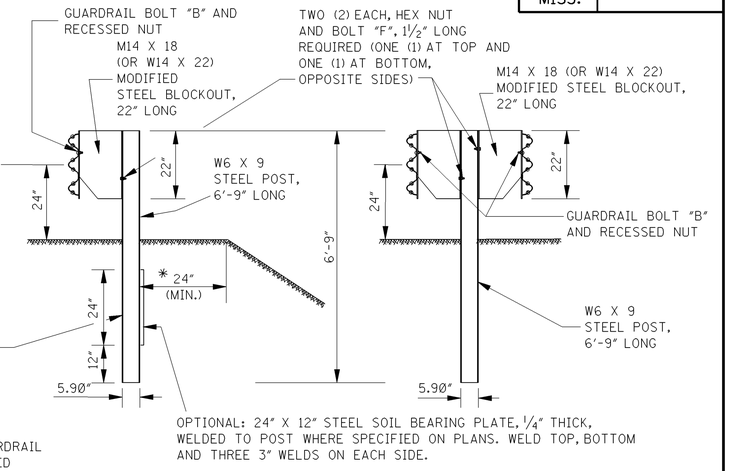

SINGLE-FACED BARRIER **DOUBLE-FACED BARRIER**

SECTION A-A

*NOTE: UNLESS SPECIFIED OTHERWISE ON THE PLANS.

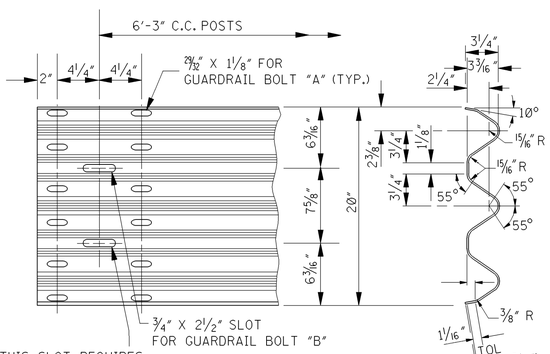

TYPICAL GUARDRAIL SECTION

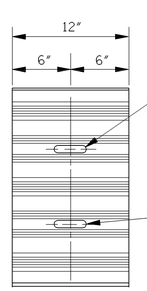

BACK-UP PLATE

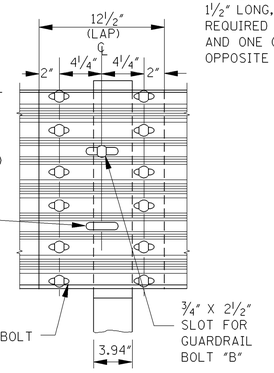

ELEVATION

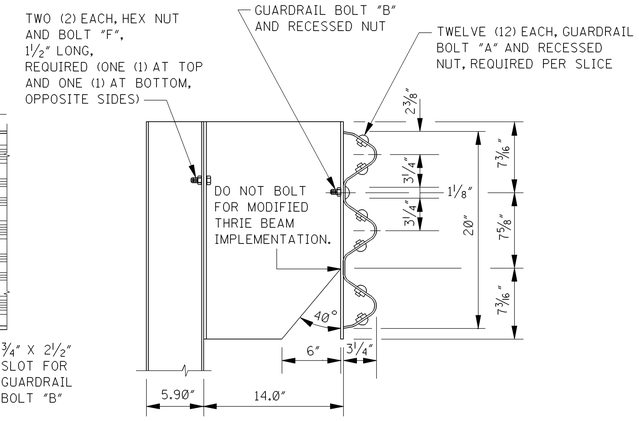

SECTION

GUARDRAIL SPLICE DETAIL

GENERAL NOTES:

1. GUARDRAIL SHALL MEET THE REQUIREMENTS OF AASHTO M 180, CLASS A, TYPE 1 UNLESS OTHERWISE DESIGNATED.
2. GUARDRAIL SHALL BE SINGLE FACED UNLESS OTHERWISE DESIGNATED.
3. GUARDRAIL SECTIONS SHALL BE LAPPED IN THE DIRECTION OF TRAFFIC FLOW FOR THE LANE NEAREST THE GUARDRAIL. THE ONLY EXCEPTION NOTED IS THAT GUARDRAIL IS TO BE LAPPED FOR APPROACHING TRAFFIC ON A BRIDGE WITH 2-WAY TRAFFIC.
4. POSTS AND BLOCKOUTS SHALL CONFORM TO AASHTO M 183M/M 183 OR ASTM A 769/A 769M (EXCEPT ULTRASONIC TESTING). THEY SHALL BE GALVANIZED IN ACCORDANCE WITH AASHTO M 111 EXCEPT WHEN CORROSION RESISTANT STEEL POSTS ARE REQUIRED IN WHICH CASE BOTH POSTS AND BLOCKOUTS SHALL CONFORM TO AASHTO M 222/M 222M AND SHALL NOT BE PAINTED OR GALVANIZED. NO PUNCHING DRILLING OR CUTTING WILL BE PERMITTED AFTER GALVANIZING EXCEPT FOR HOLES TO MOUNT GUARDRAIL DELINEATORS.
5. BACK-UP PLATE REQUIRED AT ALL NON-SPLICE POSTS.
6. FOR FASTENER DETAILS NOT FOUND ON THIS SHEET, SEE SHEET GR-1B.
7. FOR OTHER DETAILS OF POSTS, POST ACCESSORIES, FASTENERS & RAIL ELEMENTS, SEE AASHTO-AGC-ARTBA JOINT TASK FORCE NO. 13, TITLED "A GUIDE TO STANDARDIZED HIGHWAY BARRIER HARDWARE," LATEST EDITION.
8. △1 OTHER POSTS AND/OR BLOCKOUTS THAT HAVE MET THE REQUIREMENTS OF THE LATEST INDUSTRY GUIDELINES AND HAVE RECEIVED LETTERS OF APPROVAL FROM THE FEDERAL HIGHWAY ADMINISTRATION AND MISSISSIPPI DEPARTMENT OF TRANSPORTATION MAY BE USED IN LIEU OF THE POST AND BLOCKOUT SHOWN ON THIS STANDARD.

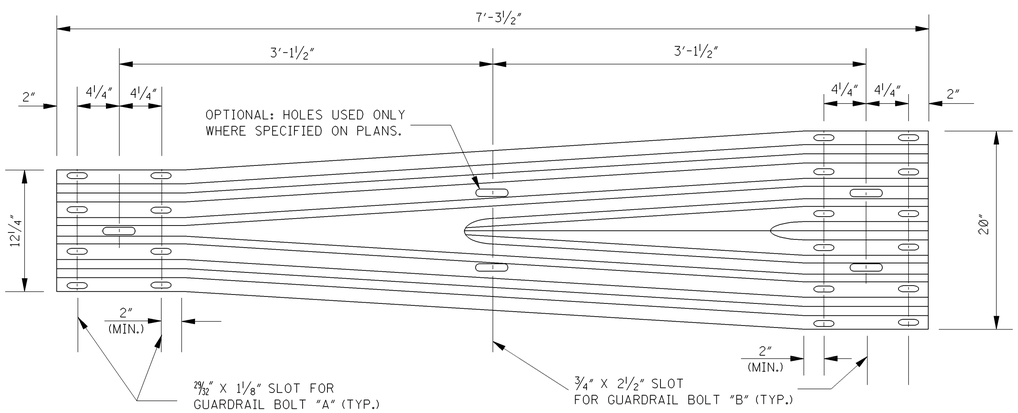

"W" THRIE-BEAM TRANSITION SECTION

NOTE: THE CROSS-SECTIONAL DIMENSIONS FOR THE "W" AND THRIE BEAM ENDS OF THE TRANSITION SECTION ARE THE SAME AS THEIR RESPECTIVE TYPICAL GUARDRAIL SECTIONS.

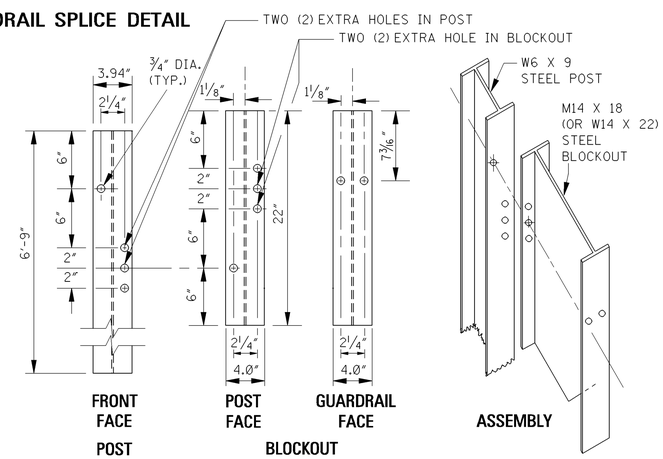

DETAILS OF ADJUSTABLE HEIGHT BLOCKOUT ASSEMBLY

NOTES:

1. ON INITIAL INSTALLATION, THE TOP HOLE IN THE BLOCKOUT SHALL BE FASTENED TO THE TOP HOLE IN THE POST. OTHER HOLES IN THE POST AND BLOCKOUT ARE FOR FUTURE 2" HEIGHT ADJUSTMENTS WHEN THE ROADWAY IS RESURFACED.
2. HOLE DETAILS ARE REQUIRED ON ALL STEEL POSTS AND BLOCKOUTS.
3. STEEL POSTS AND BLOCKOUTS ARE FABRICATED FROM W6 X 9 AND M14 X 18 (OR W14 X 22) STRUCTURAL STEEL SHAPES, RESPECTIVELY.
4. ALL HOLES IN BOTH POSTS AND BLOCKOUTS ARE ¾" IN DIAMETER.

DATE	REVISION	BY
3-01-02	ADDED NOTE	S.W.R.

MISSISSIPPI DEPARTMENT OF TRANSPORTATION
ROADWAY DESIGN DIVISION
STANDARD PLAN

GUARDRAIL: MODIFIED THRIE BEAM (STEEL POSTS)

ENGLISH

WORKING NUMBER GR-1C

ISSUE DATE: OCTOBER 1, 1998

SHEET NUMBER 183

STATE	PROJECT NO.
MISS.	

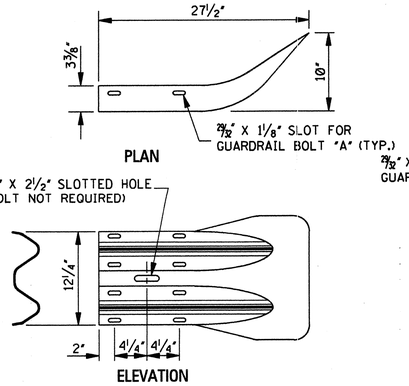

TYPE "1" "W" BEAM END SECTION

NOTE: THE TYPE "1" END SECTION IS THE STANDARD FLARED "W" BEAM END SECTION AND IS USED WITH THE TYPE "A" AND TYPE "E" BRIDGE END SECTIONS. THE CROSS-SECTIONAL DIMENSIONS OF THIS PART ARE IDENTICAL TO THOSE OF THE STANDARD "W" BEAM GUARDRAIL.

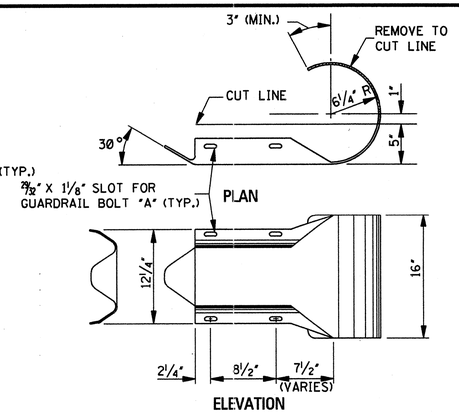

TYPE "2" "W" BEAM END SECTION

NOTE: THE TYPE "2" END SECTION IS A MODIFICATION OF THE STANDARD ROUNDED "W" BEAM END SECTION AND IS USED EXCLUSIVELY WITH THE TYPE "C" BRIDGE END SECTION. THE CROSS-SECTIONAL DIMENSIONS OF THIS PART ARE IDENTICAL TO THOSE OF THE STANDARD "W" BEAM GUARDRAIL.

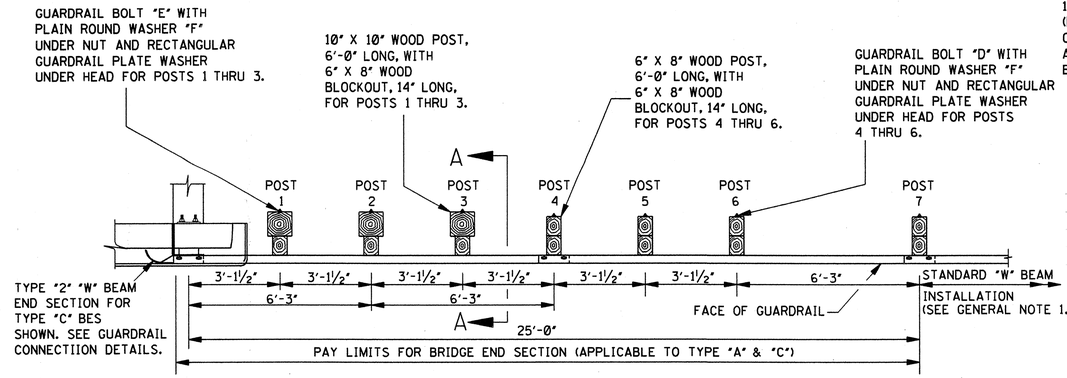

PLAN OF BRIDGE END SECTION

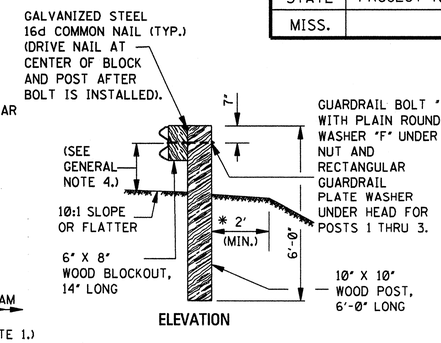

SECTION A–A

*NOTE: UNLESS OTHERWISE SPECIFIED ON THE PLANS.

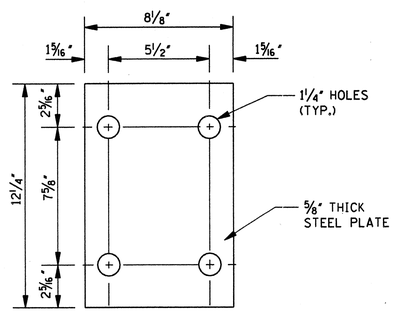

DETAIL OF PLATE "B"

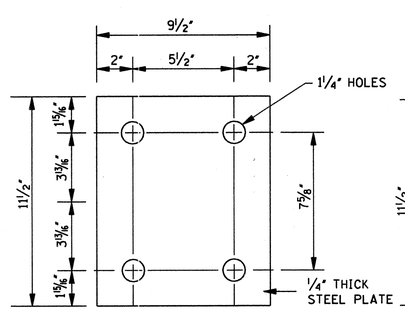

STANDARD

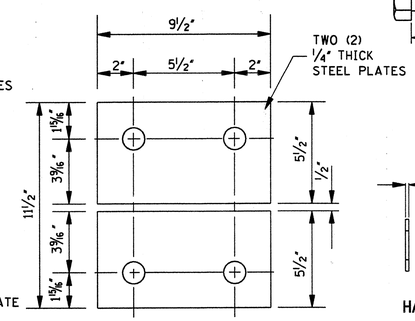

ALTERNATIVE

DETAIL OF PLATE "Z"

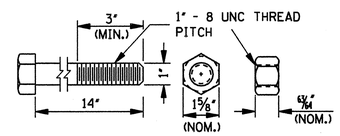

HIGH-STRENGTH STRUCTURAL HEX NUT AND BOLT "D" (ASTM A 325)

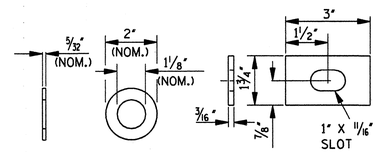

HARDENED ROUND WASHER "F"

RECTANGULAR GUARDRAIL PLATE WASHER

FASTENER DETAILS

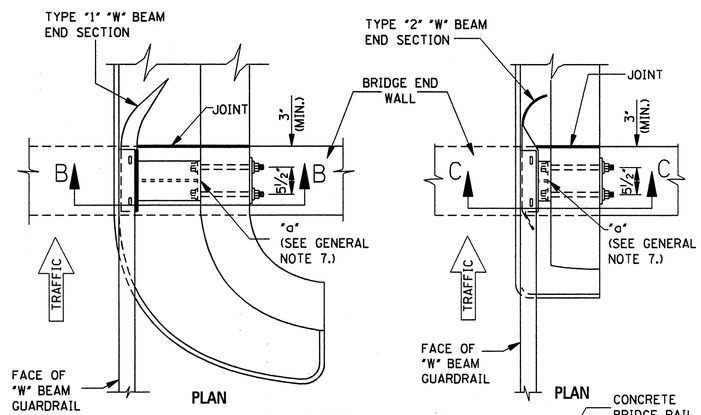

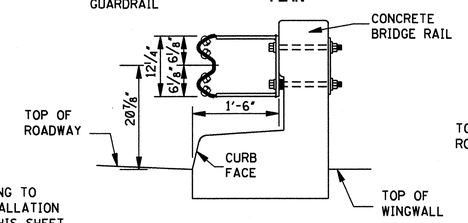

SECTION B–B

TYPE "A" BRIDGE END SECTION

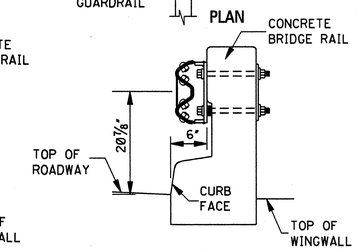

SECTION C–C

TYPE "C" BRIDGE END SECTION

GUARDRAIL CONNECTION AT BRIDGE END

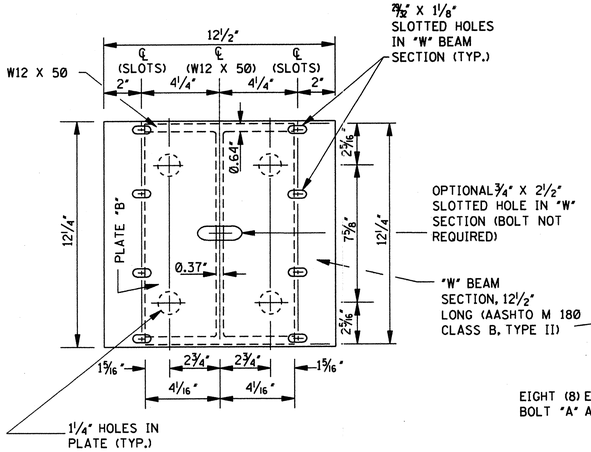

FACE ELEVATION

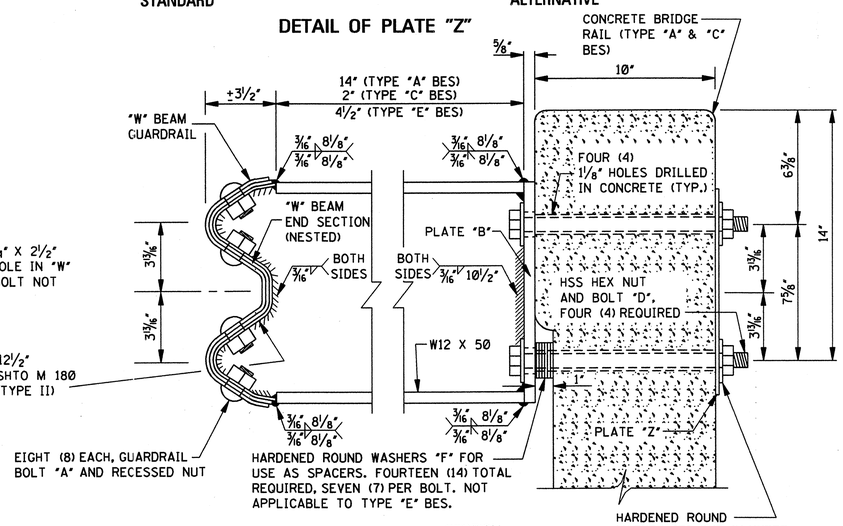

SECTION

GUARDRAIL CONNECTION DETAILS

NOTE: UNLESS OTHERWISE SPECIFIED, THE BLOCKOUT ASSEMBLY, FASTENER AND PLATE DETAILS SHOWN ABOVE ARE ALSO APPLICABLE TO THE TYPE "E" BRIDGE END SECTION. SEE GENERAL NOTE 3.

GENERAL NOTES:

1. ALL NOTES AND DETAILS PERTAINING TO NORMAL "W" BEAM GUARDRAIL INSTALLATION NOT SPECIFICALLY MODIFIED ON THIS SHEET WILL BE FOUND ON EITHER SHEET GR-1 (WOOD POSTS) OR GR-1B (STEEL POSTS).
2. WOOD POSTS ARE SHOWN ON THIS SHEET. WHEN STEEL POSTS ARE INSTALLED, A SOIL BEARING PLATE IS PLACED ON THE STANDARD SIZE STEEL POST FOR POSTS 1 THRU 3 AND A RECTANGULAR GUARDRAIL PLATE WASHER IS PLACED UNDER THE STANDARD POST BOLT HEAD FOR POSTS 1 THRU 6. SEE DETAILS FOR STEEL POST INSTALLATIONS ON SHEET GR-1B.
3. FOR INFORMATION PERTAINING TO THE INSTALLATION OF THE TYPE "E" BRIDGE END SECTION, SEE SHEET GR-2A.
4. THE HEIGHT OF RAIL AT THE BRIDGE END IS 20⅞" AND WILL BE TRANSITIONED TO 22" AT POST 7. THIS TRANSITION WILL BE A LINEAR TRANSITION IN THE VERTICAL PLANE.
5. ALL GUARDRAIL ELEMENTS SHALL BE LAPPED IN THE DIRECTION OF TRAFFIC.
6. THE APPLICATION OF THIS STANDARD IS FOR ONE-WAY TRAFFIC DIRECTION ONLY.
7. POINT "a", WHICH IS AT THE CENTERLINE BETWEEN THE ANCHOR BOLTS, WILL BE CENTERED OVER THE CENTERLINE OF THE BRIDGE END WALL EXCEPT IN SKEWED BRIDGE ENDS WHERE THE BOLT NEAREST THE JOINT WILL BE A MINIMUM OF 3" FROM THE JOINT.

DATE	REVISION	BY

MISSISSIPPI DEPARTMENT OF TRANSPORTATION
ROADWAY DESIGN DIVISION
STANDARD PLAN

GUARDRAIL: BRIDGE END SECTIONS TYPE "A" & "C"

ENGLISH

WORKING NUMBER GR-2

ISSUE DATE: OCTOBER 1, 1998

SHEET NUMBER 184

STATE	PROJECT NO.
MISS.	

TYPE "E" BRIDGE END SECTION

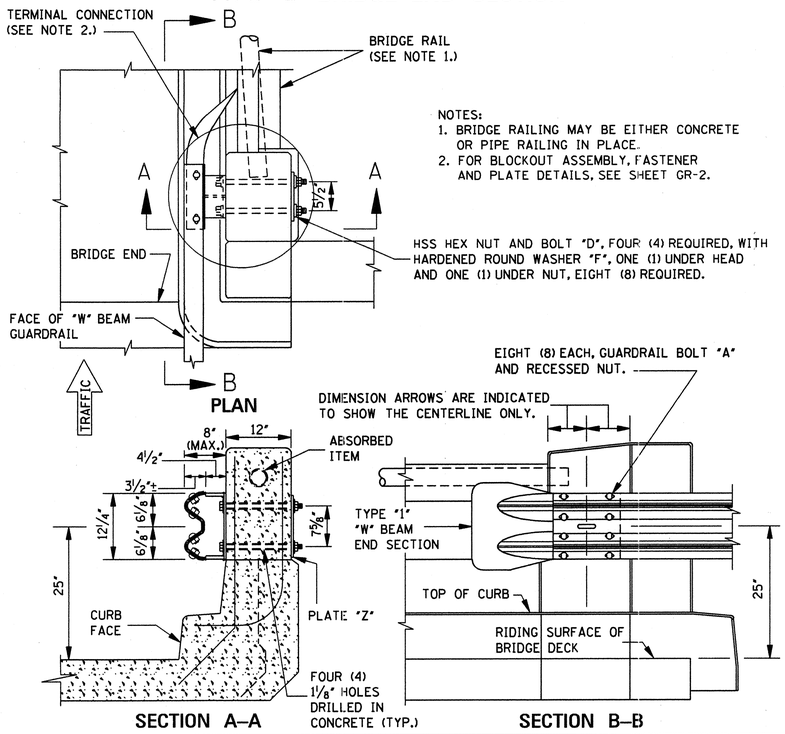

NOTES:
1. BRIDGE RAILING MAY BE EITHER CONCRETE OR PIPE RAILING IN PLACE.
2. FOR BLOCKOUT ASSEMBLY, FASTENER AND PLATE DETAILS, SEE SHEET GR-2.

PLAN

SECTION A–A

SECTION B–B

TYPE "F" BRIDGE END SECTION

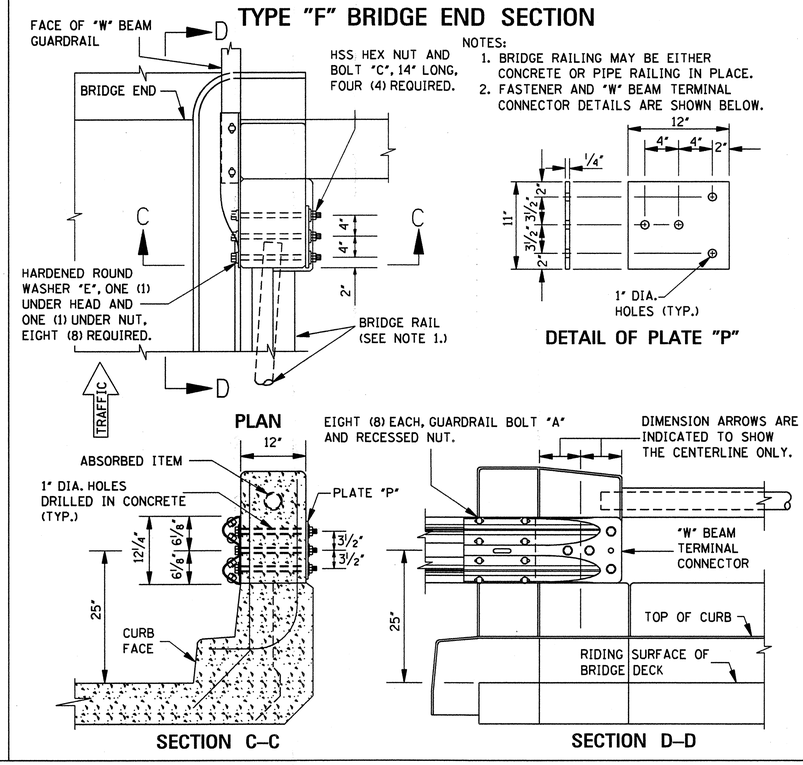

NOTES:
1. BRIDGE RAILING MAY BE EITHER CONCRETE OR PIPE RAILING IN PLACE.
2. FASTENER AND "W" BEAM TERMINAL CONNECTOR DETAILS ARE SHOWN BELOW.

PLAN

SECTION C–C

SECTION D–D

DETAIL OF PLATE "P"

TYPE "G" BRIDGE END SECTION

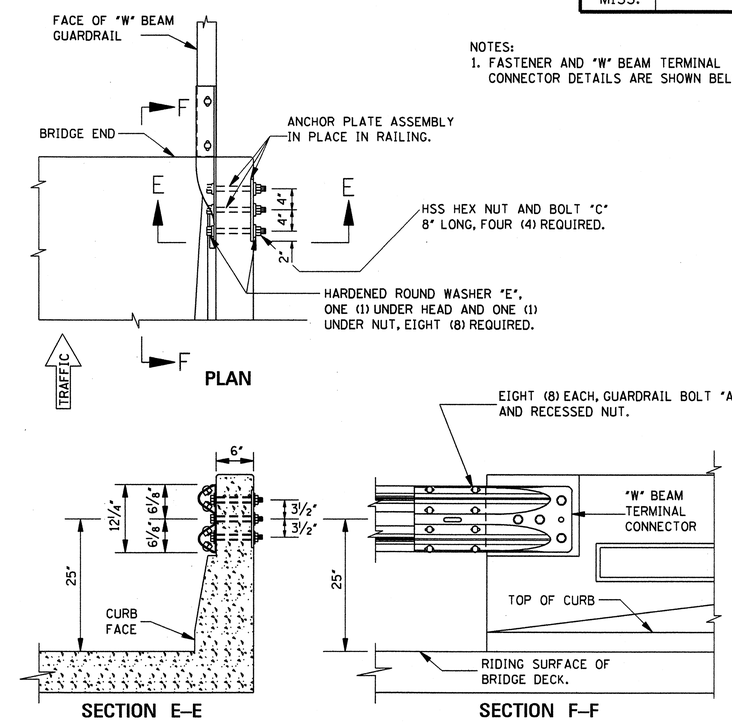

NOTES:
1. FASTENER AND "W" BEAM TERMINAL CONNECTOR DETAILS ARE SHOWN BELOW.

PLAN

SECTION E–E

SECTION F–F

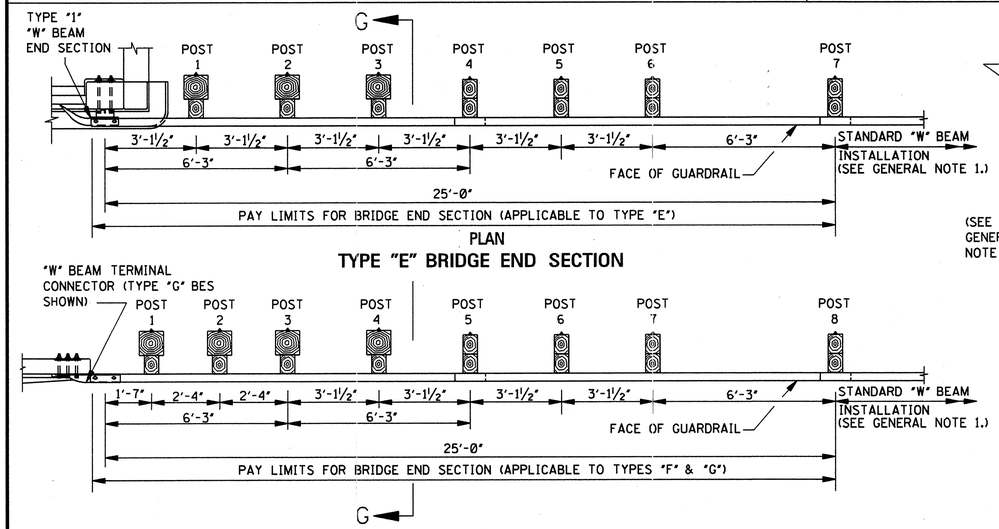

PLAN

TYPE "E" BRIDGE END SECTION

PLAN

TYPE "F" & "G" BRIDGE END SECTIONS

NOTES:
1. TYPE "E" BES (POSTS 1 THRU 3); TYPES "F" & "G" BES (POSTS 1 THRU 4): 10" X 10" WOOD POST, 6'-0" LONG, WITH 6" X 8" WOOD BLOCKOUT, 14" LONG, ATTACHED USING GUARDRAIL BOLT "E" WITH PLAIN ROUND WASHER "F" UNDER NUT AND RECTANGULAR GUARDRAIL PLATE WASHER UNDER HEAD.
2. TYPE "E" BES (POSTS 4 THRU 6); TYPES "F" & "G" BES (POSTS 5 THRU 7): 6" X 8" WOOD POST, 6'-0" LONG, WITH 6" X 8" WOOD BLOCKOUT, 14" LONG, ATTACHED USING GUARDRAIL BOLT "D" WITH PLAIN ROUND WASHER "F" UNDER NUT AND RECTANGULAR GUARDRAIL PLATE WASHER UNDER HEAD.

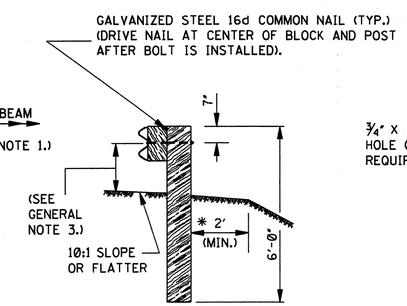

SECTION G–G

* NOTE: UNLESS OTHERWISE SPECIFIED ON THE PLANS.

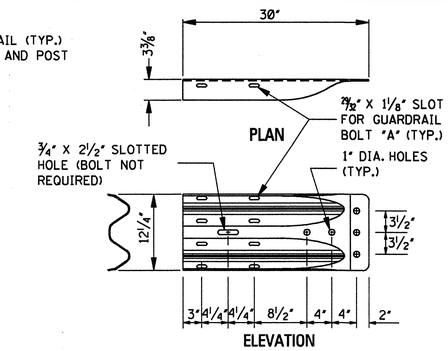

PLAN

ELEVATION

"W" BEAM TERMINAL CONNECTOR

NOTE: THE "W" BEAM TERMINAL CONNECTOR IS USED WITH TYPE "F" & "G" BRIDGE END SECTIONS. THE CROSS-SECTIONAL DIMENSIONS OF THIS PART ARE IDENTICAL TO THE STANDARD "W" BEAM SECTION (AASHTO M 180 CLASS B, TYPE II).

GENERAL NOTES:
1. ALL NOTES AND DETAILS PERTAINING TO NORMAL "W" BEAM GUARDRAIL INSTALLATION NOT SPECIFICALLY MODIFIED ON THIS SHEET WILL BE FOUND ON EITHER SHEET GR-1 (WOOD POSTS) OR GR-1B (STEEL POSTS).
2. WOOD POSTS ARE SHOWN ON THIS SHEET. WHEN STEEL POSTS ARE INSTALLED, A SOIL BEARING PLATE IS PLACED ON THE STANDARD SIZE STEEL POST FOR POSTS 1 THRU 3 IN THE TYPE "E" BES AND FOR POSTS 1 THRU 4 IN THE TYPE "F" & "G" BES. A RECTANGULAR GUARDRAIL PLATE WASHER IS PLACED UNDER THE STANDARD POST BOLT HEAD FOR POSTS 1 THRU 6 IN THE TYPE "E" BES AND FOR POSTS 1 THRU 7 IN THE TYPE "F" & "G" BES. SEE DETAILS FOR STEEL POST INSTALLATION ON SHEET GR-1B.
3. THE HEIGHT OF RAIL AT THE BRIDGE END IS 25" AND WILL BE TRANSITIONED TO 22" AT POST 7 IN THE TYPE "E" BES AND AT POST 8 IN THE TYPE "F" & "G" BES. THIS TRANSITION WILL BE A LINEAR TRANSITION IN THE VERTICAL PLANE.
4. GUARDRAIL ELEMENTS SHALL BE LAPPED IN THE DIRECTION OF TRAFFIC. THE ONLY EXCEPTION NOTED IS THAT GUARDRAIL IS TO BE LAPPED FOR APPROACHING TRAFFIC ON A BRIDGE WITH 2-WAY TRAFFIC.

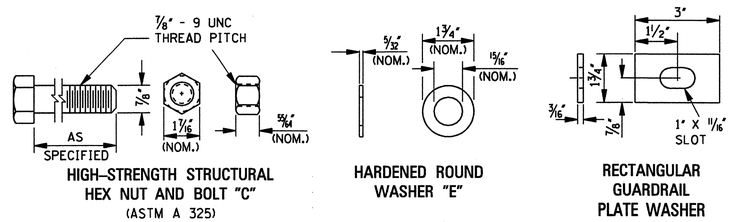

HIGH-STRENGTH STRUCTURAL HEX NUT AND BOLT "C" (ASTM A 325)

HARDENED ROUND WASHER "E"

RECTANGULAR GUARDRAIL PLATE WASHER

FASTENER DETAILS

DATE	REVISION	BY

MISSISSIPPI DEPARTMENT OF TRANSPORTATION
ROADWAY DESIGN DIVISION
STANDARD PLAN

GUARDRAIL: BRIDGE END SECTIONS TYPE "E", "F" & "G"

ENGLISH

WORKING NUMBER GR-2A

ISSUE DATE: OCTOBER 1, 1998

SHEET NUMBER 185

STATE	PROJECT NO.
MISS.	

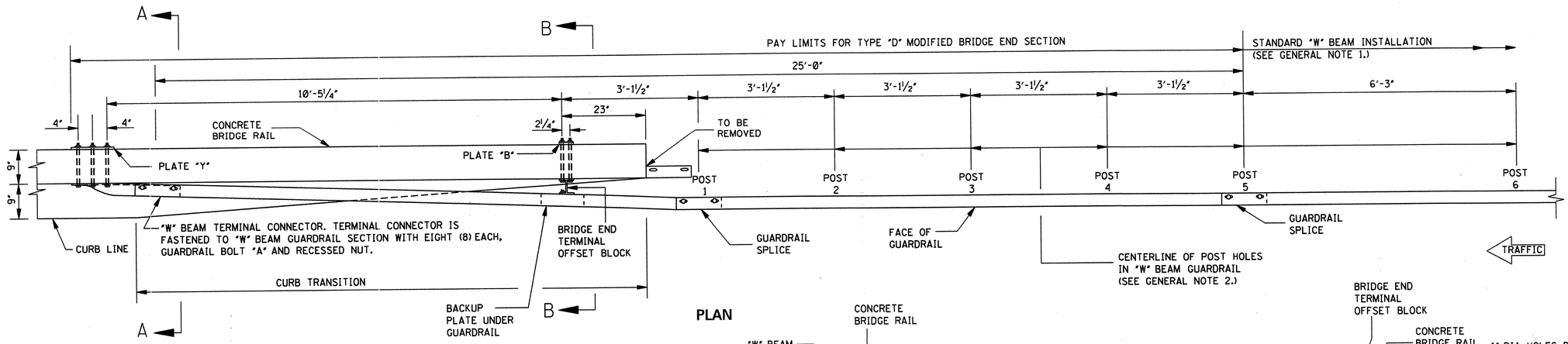

PLAN

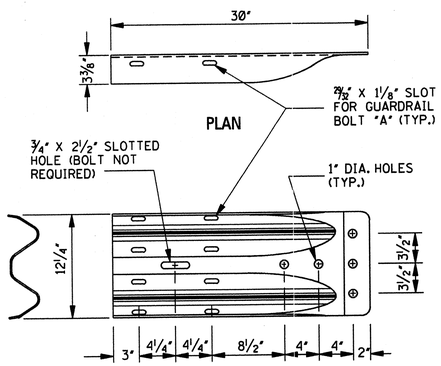

ELEVATION

"W" BEAM TERMINAL CONNECTOR

NOTE: THE "W" BEAM TERMINAL CONNECTOR IS USED WITH THE TYPE "D" MODIFIED BRIDGE END SECTION. THE CROSS-SECTIONAL DIMENSIONS OF THIS PART ARE IDENTICAL TO THE STANDARD "W" BEAM SECTION (AASHTO M 180 CLASS B, TYPE II).

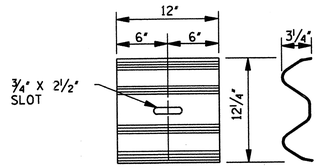

"W" BEAM BACKUP PLATE

NOTE: THE "W" BEAM BACK-UP PLATE IS USED UNDER THE "W" BEAM RAIL SECTION WHERE INDICATED ON THIS SHEET. THE CROSS-SECTIONAL DIMENSIONS OF THIS PART ARE IDENTICAL TO THOSE OF THE STANDARD "W" BEAM RAIL SECTION.

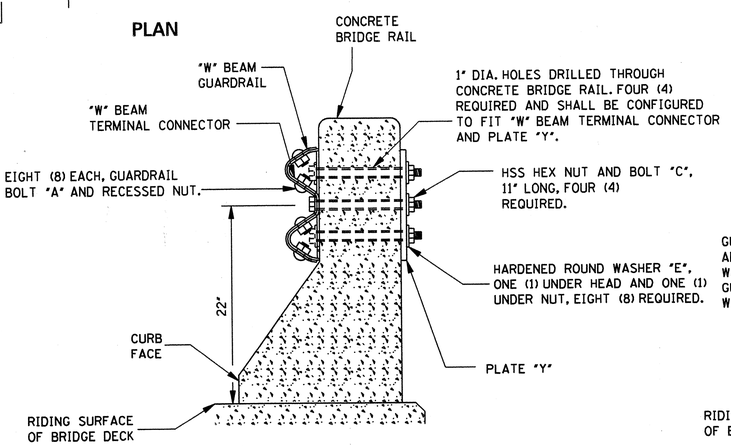

SECTION A–A

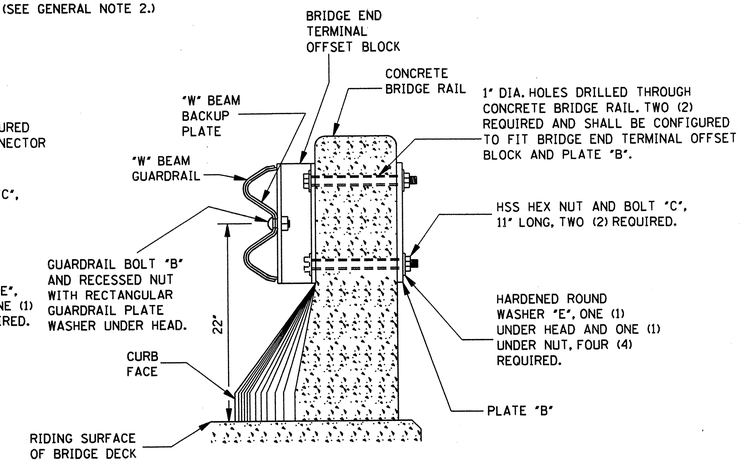

SECTION B–B

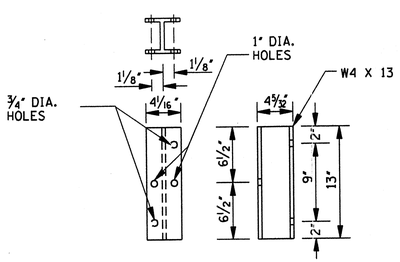

DETAIL OF BRIDGE END TERMINAL OFFSET BLOCK

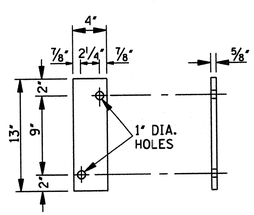

DETAIL OF PLATE "B"

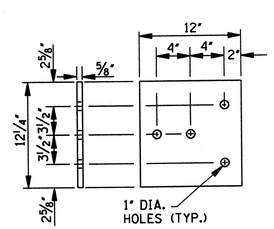

DETAIL OF PLATE "Y"

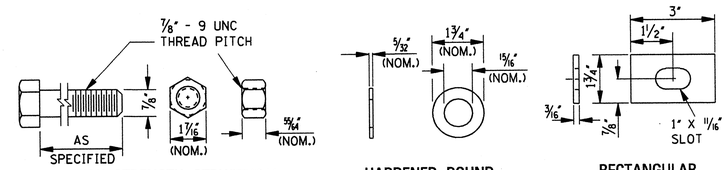

HIGH-STRENGTH STRUCTURAL HEX NUT AND BOLT "C" (ASTM A 325)

HARDENED ROUND WASHER "E"

RECTANGULAR GUARDRAIL PLATE WASHER

FASTENER DETAILS

GENERAL NOTES:

1. ALL NOTES AND DETAILS PERTAINING TO NORMAL "W" BEAM GUARDRAIL INSTALLATION NOT SPECIFICALLY MODIFIED ON THIS SHEET WILL BE FOUND ON EITHER SHEET GR-1 (WOOD POSTS) OR GR-1B (STEEL POSTS).
2. INSTALLATION DETAILS FOR BRIDGE END SECTION GUARDRAIL POSTS WILL BE FOUND ON EITHER SHEET GR-2C (WOOD POSTS) OR GR-2D (STEEL POSTS).
3. GUARDRAIL ELEMENTS SHALL BE LAPPED IN THE DIRECTION OF TRAFFIC. THE ONLY EXCEPTION NOTED IS THAT GUARDRAIL IS TO BE LAPPED FOR APPROACHING TRAFFIC ON A BRIDGE WITH 2-WAY TRAFFIC.

DATE	REVISION	BY

MISSISSIPPI DEPARTMENT OF TRANSPORTATION
ROADWAY DESIGN DIVISION
STANDARD PLAN

GUARDRAIL: BRIDGE END SECTION TYPE "D" MODIFIED

DEPARTMENT OF TRANSPORTATION ENGLISH MISSISSIPPI

WORKING NUMBER GR-2B

ISSUE DATE: OCTOBER 1, 1998

SHEET NUMBER 186

STATE	PROJECT NO.
MISS.	

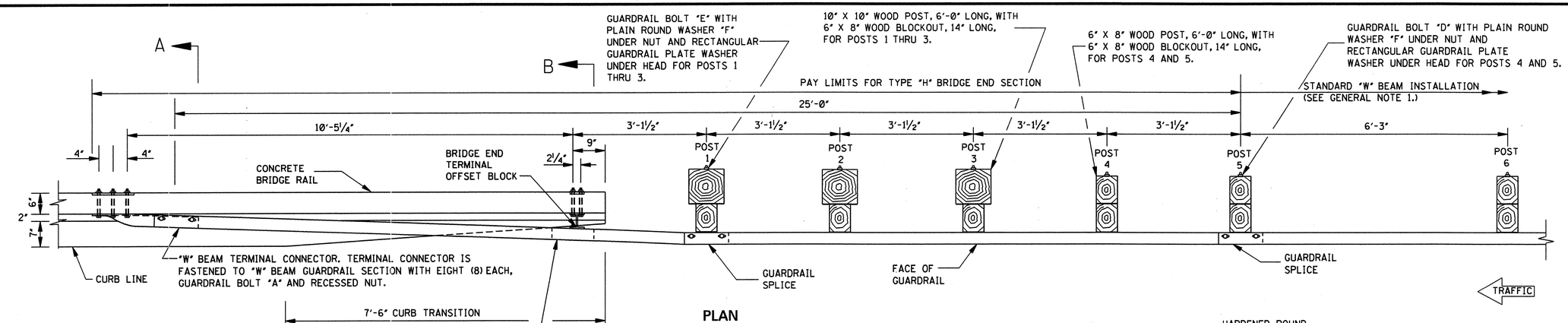

PLAN

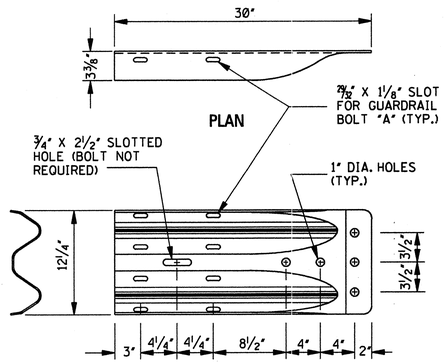

ELEVATION

"W" BEAM TERMINAL CONNECTOR

NOTE: THE "W" BEAM TERMINAL CONNECTOR IS USED WITH THE TYPE "H" BRIDGE END SECTION. THE CROSS-SECTIONAL DIMENSIONS OF THIS PART ARE IDENTICAL TO THE STANDARD "W" BEAM SECTION (AASHTO M 180 CLASS B, TYPE II).

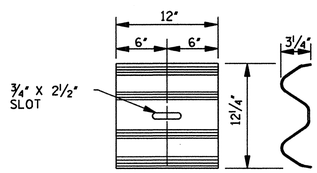

"W" BEAM BACKUP PLATE

NOTE: THE "W" BEAM BACK-UP PLATE IS USED UNDER THE "W" BEAM RAIL SECTION WHERE INDICATED ON THIS SHEET. THE CROSS-SECTIONAL DIMENSIONS OF THIS PART ARE IDENTICAL TO THOSE OF THE STANDARD "W" BEAM RAIL SECTION.

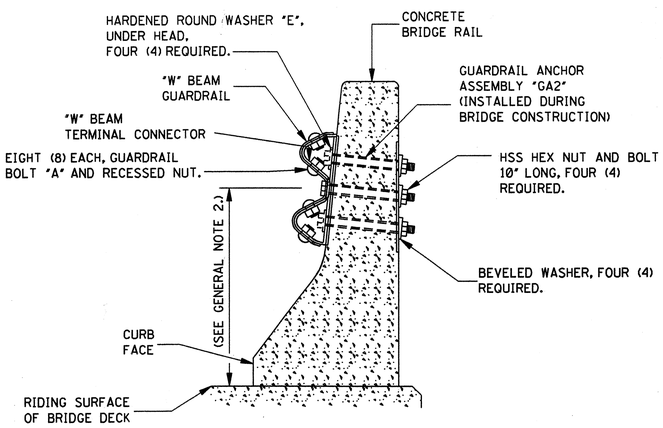

SECTION A–A

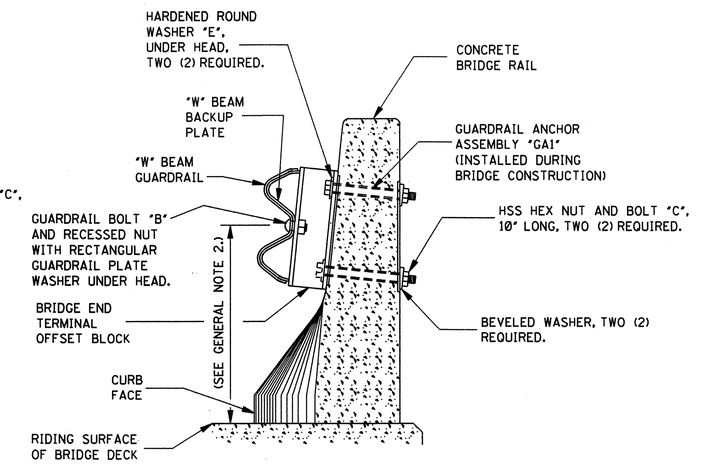

SECTION B–B

GENERAL NOTES:

1. ALL NOTES AND DETAILS PERTAINING TO NORMAL "W" BEAM GUARDRAIL INSTALLATION NOT SPECIFICALLY MODIFIED ON THIS SHEET WILL BE FOUND ON SHEET GR-1 (WOOD POSTS).
2. THE HEIGHT OF RAIL AT THE BRIDGE END IS 21" AND WILL BE TRANSITIONED TO 22" AT POST 6. THIS TRANSITION WILL BE A LINEAR TRANSITION IN THE VERTICAL PLANE.
3. GUARDRAIL ELEMENTS SHALL BE LAPPED IN THE DIRECTION OF TRAFFIC. THE ONLY EXCEPTION NOTED IS THAT GUARDRAIL IS TO BE LAPPED FOR APPROACHING TRAFFIC ON A BRIDGE WITH 2-WAY TRAFFIC.

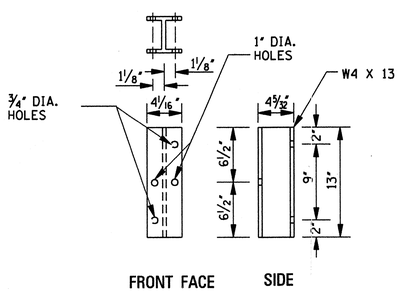

DETAIL OF BRIDGE END TERMINAL OFFSET BLOCK

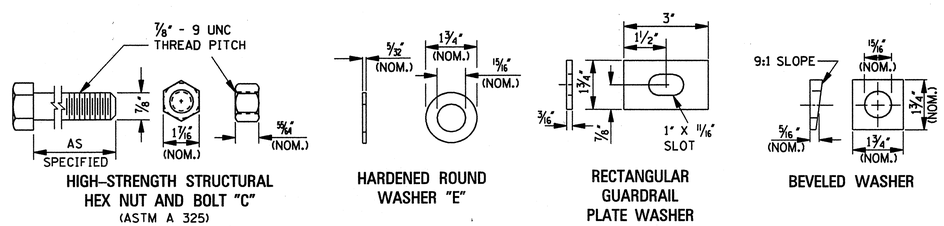

HIGH-STRENGTH STRUCTURAL HEX NUT AND BOLT "C" (ASTM A 325)

HARDENED ROUND WASHER "E"

RECTANGULAR GUARDRAIL PLATE WASHER

BEVELED WASHER

FASTENER DETAILS

				BY
				REVISION
				DATE

MISSISSIPPI DEPARTMENT OF TRANSPORTATION
ROADWAY DESIGN DIVISION
STANDARD PLAN

GUARDRAIL: BRIDGE END SECTION TYPE "H" (WOOD POSTS)

ENGLISH

WORKING NUMBER GR-2C

ISSUE DATE: OCTOBER 1, 1998

SHEET NUMBER 187

STATE	PROJECT NO.
MISS.	

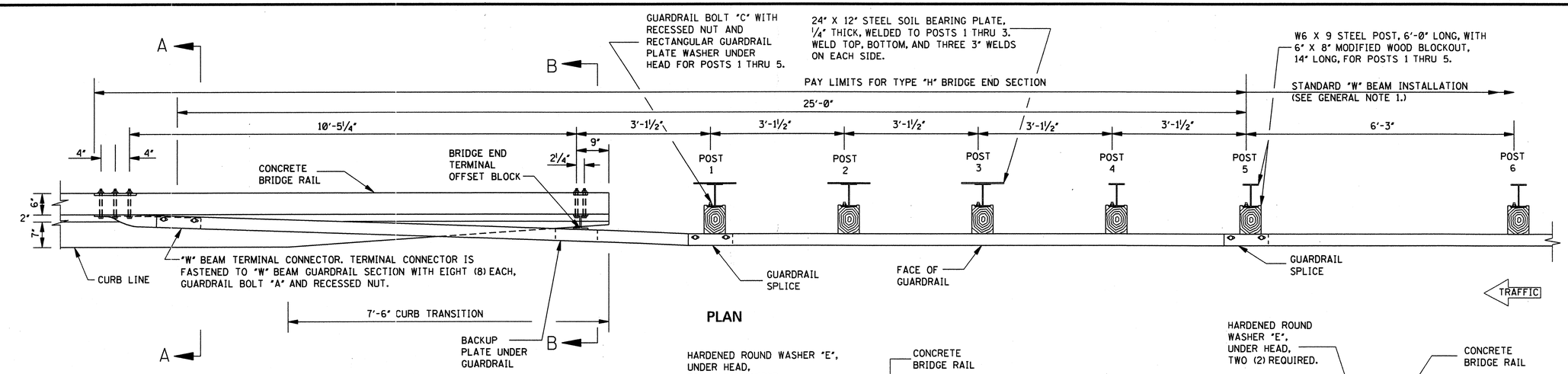

PLAN

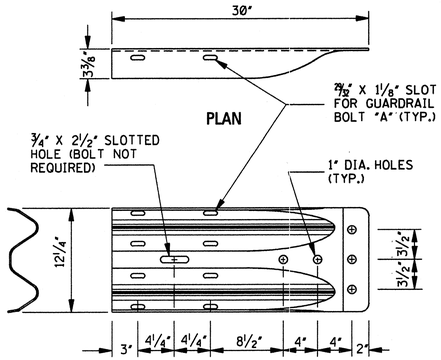

ELEVATION

"W" BEAM TERMINAL CONNECTOR

NOTE: THE "W" BEAM TERMINAL CONNECTOR IS USED WITH THE TYPE "H" BRIDGE END SECTION. THE CROSS-SECTIONAL DIMENSIONS OF THIS PART ARE IDENTICAL TO THE STANDARD "W" BEAM SECTION (AASHTO M 180 CLASS B, TYPE II).

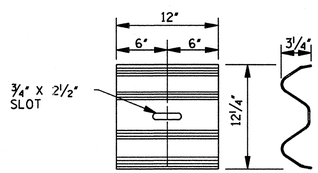

"W" BEAM BACKUP PLATE

NOTE: THE "W" BEAM BACK-UP PLATE IS USED UNDER THE "W" BEAM RAIL SECTION WHERE INDICATED ON THIS SHEET. THE CROSS-SECTIONAL DIMENSIONS OF THIS PART ARE IDENTICAL TO THOSE OF THE STANDARD "W" BEAM RAIL SECTION.

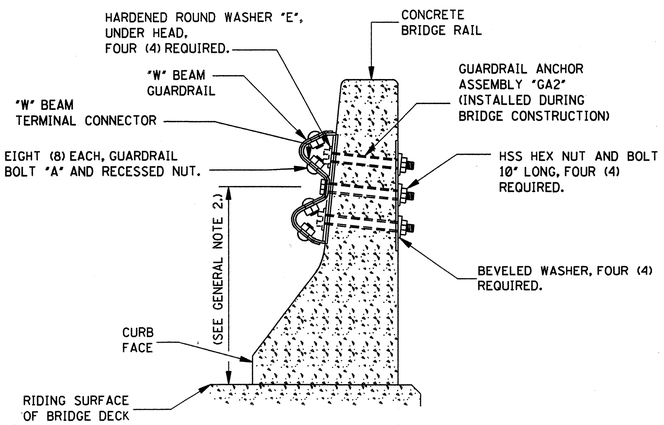

SECTION A–A

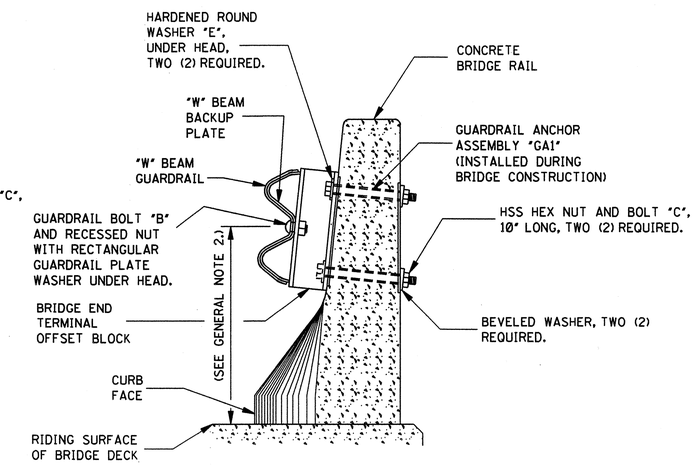

SECTION B–B

GENERAL NOTES:

1. ALL NOTES AND DETAILS PERTAINING TO NORMAL "W" BEAM GUARDRAIL INSTALLATION NOT SPECIFICALLY MODIFIED ON THIS SHEET WILL BE FOUND ON SHEET GR-1B (STEEL POSTS).
2. THE HEIGHT OF RAIL AT THE BRIDGE END IS 21" AND WILL BE TRANSITIONED TO 22" AT POST 6. THIS TRANSITION WILL BE A LINEAR TRANSITION IN THE VERTICAL PLANE.
3. GUARDRAIL ELEMENTS SHALL BE LAPPED IN THE DIRECTION OF TRAFFIC. THE ONLY EXCEPTION NOTED IS THAT GUARDRAIL IS TO BE LAPPED FOR APPROACHING TRAFFIC ON A BRIDGE WITH 2-WAY TRAFFIC.

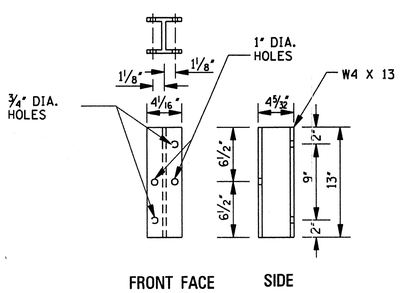

DETAIL OF BRIDGE END TERMINAL OFFSET BLOCK

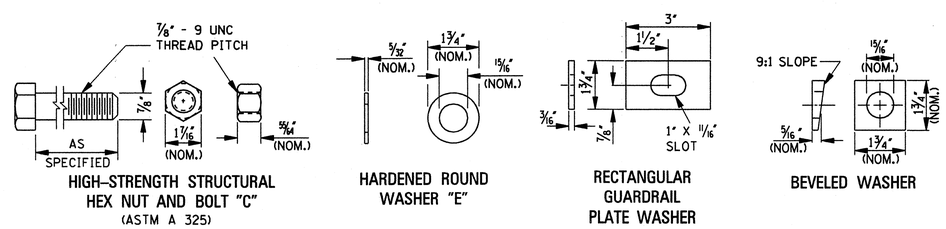

HIGH-STRENGTH STRUCTURAL HEX NUT AND BOLT "C" (ASTM A 325)

HARDENED ROUND WASHER "E"

RECTANGULAR GUARDRAIL PLATE WASHER

BEVELED WASHER

FASTENER DETAILS

MISSISSIPPI DEPARTMENT OF TRANSPORTATION
ROADWAY DESIGN DIVISION
STANDARD PLAN

DATE	REVISION	BY

GUARDRAIL: BRIDGE END SECTION TYPE "H"
(STEEL POSTS)

ISSUE DATE: OCTOBER 1, 1998

WORKING NUMBER GR-2D

SHEET NUMBER 188

STATE	PROJECT NO.
MISS.	

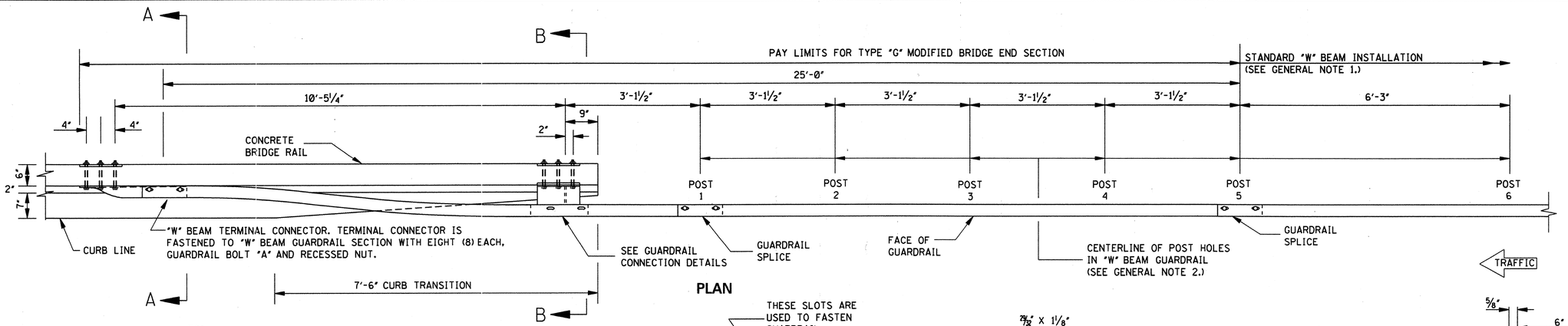

PLAN

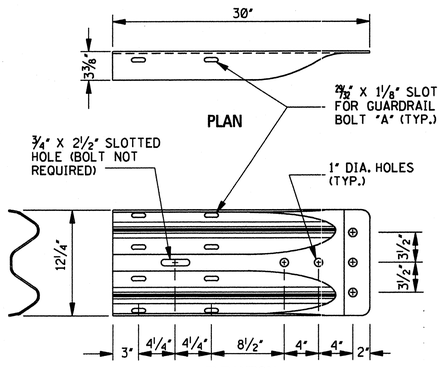

ELEVATION

"W" BEAM TERMINAL CONNECTOR

NOTE: THE "W" BEAM TERMINAL CONNECTOR IS USED WITH THE TYPE "G" MODIFIED BRIDGE END SECTION. THE CROSS-SECTIONAL DIMENSIONS OF THIS PART ARE IDENTICAL TO THE STANDARD "W" BEAM SECTION (AASHTO M 180 CLASS B, TYPE II).

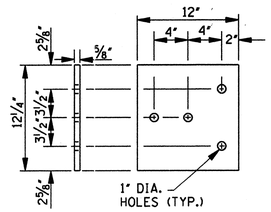

DETAIL OF PLATE "Y"

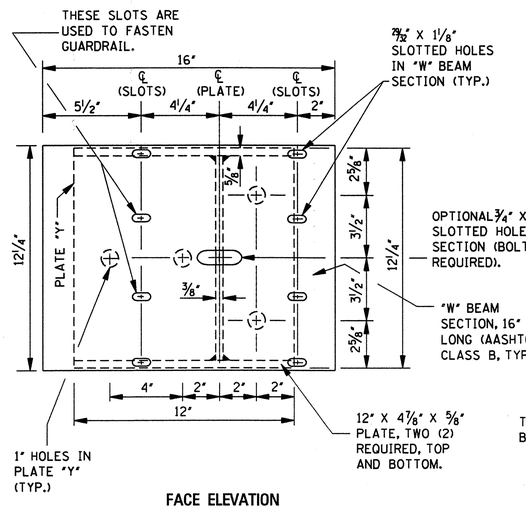

FACE ELEVATION

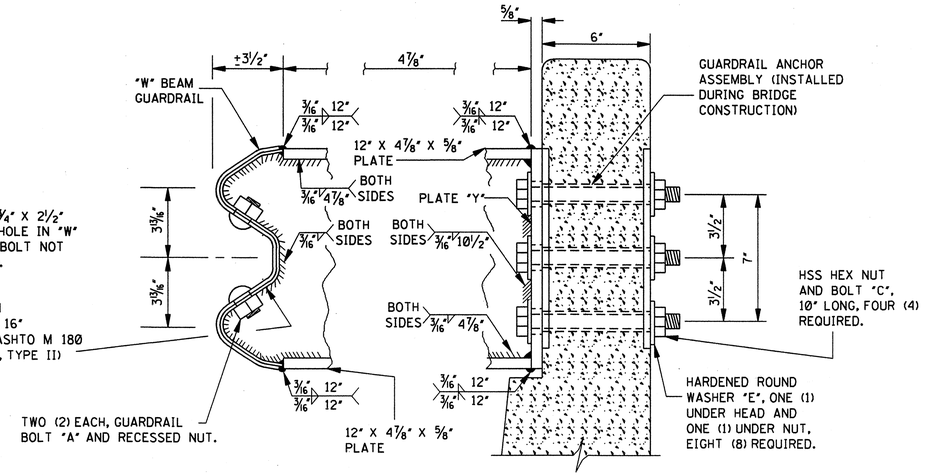

SECTION

GUARDRAIL CONNECTION DETAILS

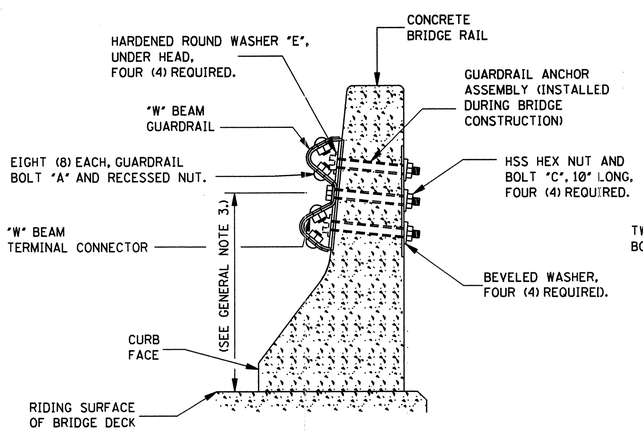

SECTION A–A

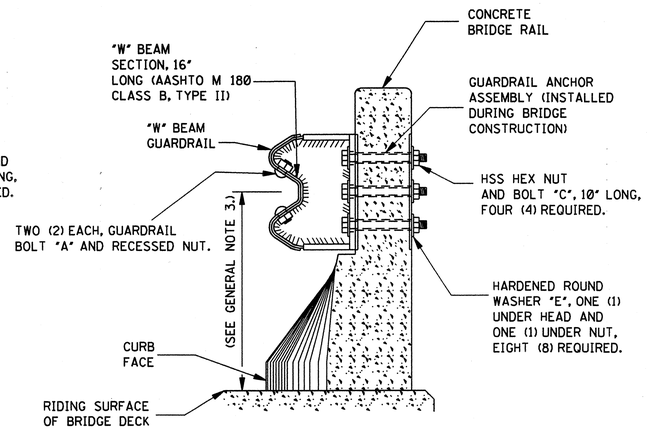

SECTION B–B

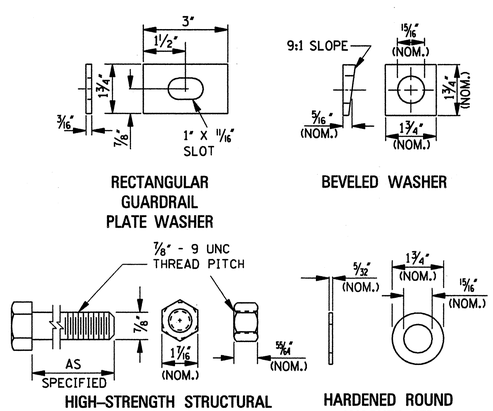

FASTENER DETAILS

GENERAL NOTES:

1. ALL NOTES AND DETAILS PERTAINING TO NORMAL "W" BEAM GUARDRAIL INSTALLATION NOT SPECIFICALLY MODIFIED ON THIS SHEET WILL BE FOUND ON EITHER SHEET GR-1 (WOOD POSTS) OR GR-1B (STEEL POSTS).
2. INSTALLATION DETAILS FOR BRIDGE END SECTION GUARDRAIL POSTS WILL BE FOUND ON EITHER SHEET GR-2C (WOOD POSTS) OR GR-2D (STEEL POSTS).
3. THE HEIGHT OF RAIL AT THE BRIDGE END IS 21" AND WILL BE TRANSITIONED TO 22" AT POST 6. THIS TRANSITION WILL BE A LINEAR TRANSITION IN THE VERTICAL PLANE.
4. GUARDRAIL ELEMENTS SHALL BE LAPPED IN THE DIRECTION OF TRAFFIC. THE ONLY EXCEPTION NOTED IS THAT GUARDRAIL IS TO BE LAPPED FOR APPROACHING TRAFFIC ON A BRIDGE WITH 2-WAY TRAFFIC.

DATE	REVISION	BY

MISSISSIPPI DEPARTMENT OF TRANSPORTATION
ROADWAY DESIGN DIVISION
STANDARD PLAN

GUARDRAIL: BRIDGE END SECTION TYPE "G" MODIFIED

ENGLISH

WORKING NUMBER GR-2E

ISSUE DATE: OCTOBER 1, 1998

SHEET NUMBER 189

STATE	PROJECT NO.
MISS.	

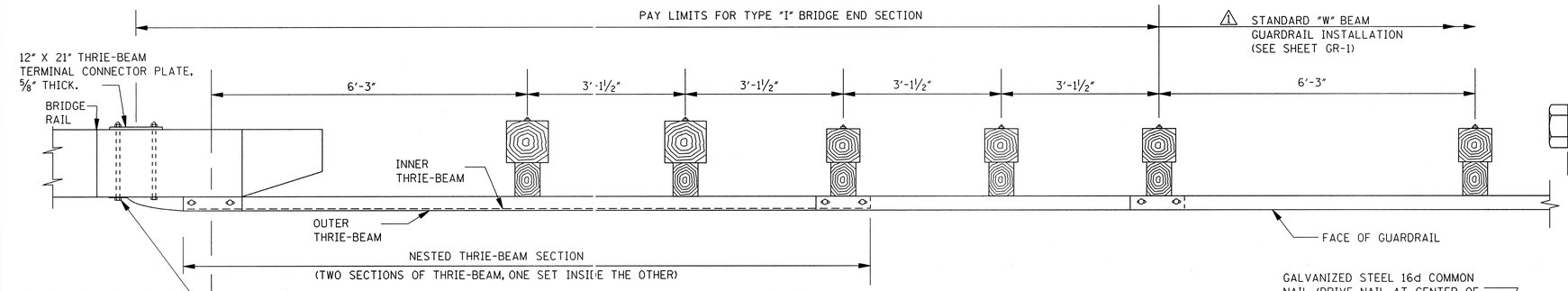

PLAN

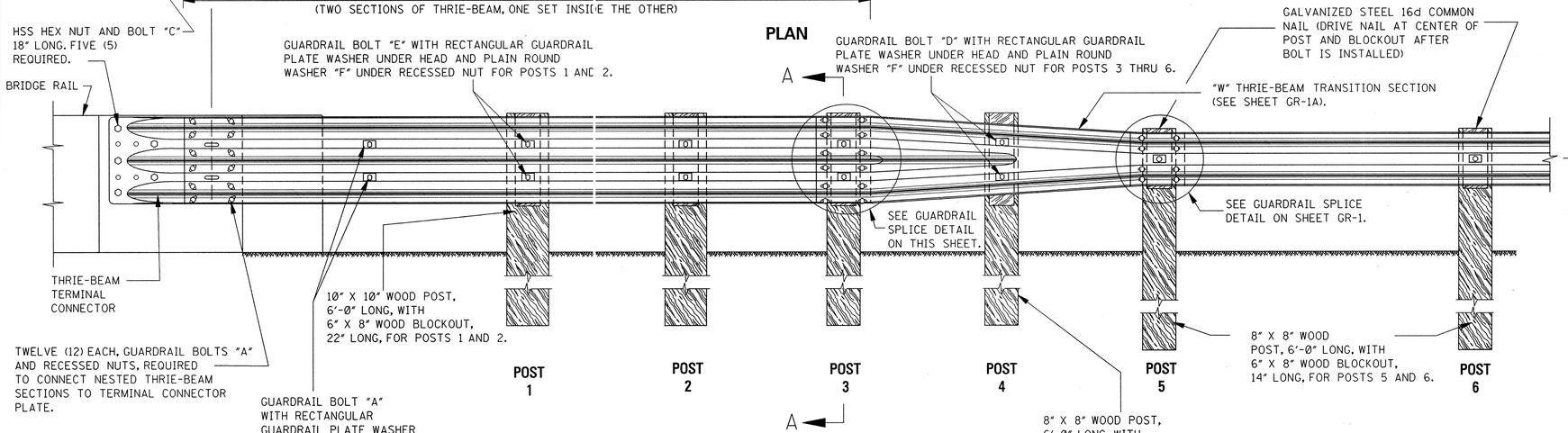

ELEVATION FROM ℄ ROADWAY

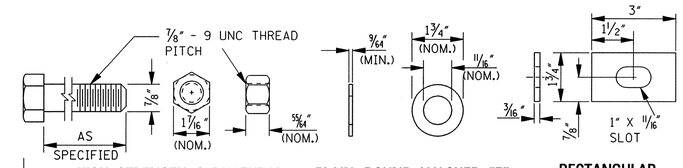

HIGH-STRENGTH STRUCTURAL HEX NUT AND BOLT "C"

PLAIN ROUND WASHER "F"

RECTANGULAR GUARDRAIL PLATE WASHER

FASTENER DETAILS

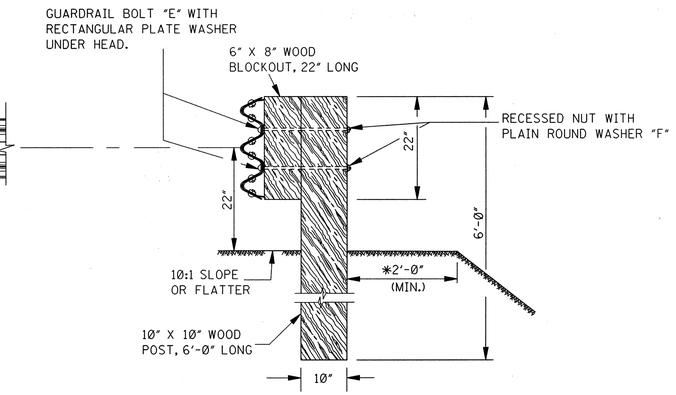

SECTION A–A

*NOTE: UNLESS SPECIFIED OTHERWISE ON THE PLANS.

GENERAL NOTES:

1. THIS GUARDRAIL TRANSITION IS APPROPRIATE FOR A CONNECTION TO A VERTICAL CONCRETE SHAPE AND SHOULD NOT BE CONNECTED DIRECTLY TO A CONCRETE SAFETY SHAPE. CONCRETE SAFETY SHAPE BARRIERS SHOULD BE TRANSITIONED TO A VERTICAL SHAPE AT THE GUARDRAIL CONNECTION. BRIDGE RAIL ENDS AND BRIDGE PARAPETS MUST BE OF ADEQUATE STRENGTH TO ACCEPT FULL IMPACT LOADING.

GENERAL NOTES (CONTINUED):

2. SEE RAILING DETAILS IN BRIDGE DRAWINGS FOR OTHER DETAILS.
3. GUARDRAIL SHALL MEET THE REQUIREMENTS OF AASHTO M 180, CLASS A, TYPE 1 UNLESS OTHERWISE DESIGNATED.
4. THE TYPE "I" TRANSITION IS USED ON BOTH LEFT AND RIGHT SIDES OF EACH BRIDGE APPROACH WITH 2-WAY TRAFFIC AND THE GUARDRAIL SECTIONS SHALL BE LAPPED IN THE DIRECTION OF THE APPROACHING TRAFFIC.
5. ALL WOOD POSTS AND BLOCKOUTS SHALL BE TREATED TIMBER IN ACCORDANCE WITH MISSISSIPPI DEPARTMENT OF TRANSPORTATION STANDARD SPECIFICATIONS.
6. FOR FASTENER DETAILS NOT FOUND ON THIS SHEET, SEE SHEET GR-1.
7. DETAILS PERTINENT TO THE STANDARD INSTALLATION OF "W" AND THRIE-BEAM SECTIONS NOT SPECIFICALLY MODIFIED ON THIS SHEET WILL BE FOUND ON SHEETS GR-1 AND GR-1A, RESPECTIVELY.
8. FOR OTHER DETAILS OF POSTS, POST ACCESSORIES, FASTENERS & RAIL ELEMENTS, SEE AASHTO-AGC-ARTBA JOINT TASK FORCE NO. 13, TITLED "A GUIDE TO STANDARDIZED HIGHWAY BARRIER HARDWARE," LATEST EDITION.

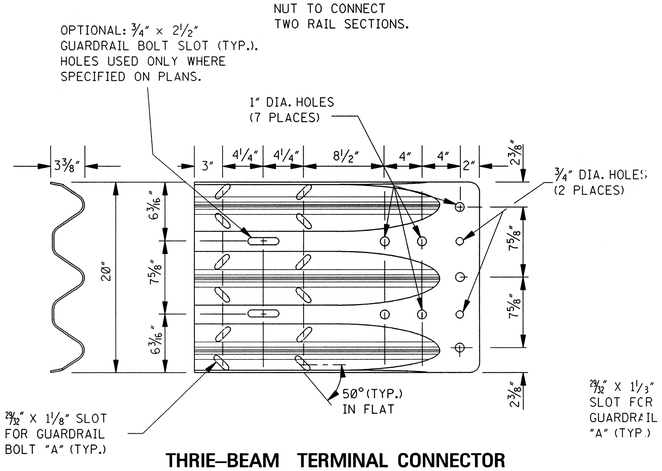

THRIE–BEAM TERMINAL CONNECTOR

NOTES:

1. THE THRIE-BEAM TERMINAL CONNECTOR IS TO BE AASHTO M 180 CORRUGATED SHEET STEEL, CLASS B, TYPE I.
2. ALTERNATIVELY, THE SPLICE SLOTS CAN BE ORIENTED PARALLEL TO THE LONGITUDINAL AXIS OF THE TERMINAL CONNECTOR. HOWEVER, THE 50° SLOT VERSION IS EASIER TO INSTALL WHERE SEVERAL GUARDRAIL SECTIONS ARE NESTED TOGETHER.

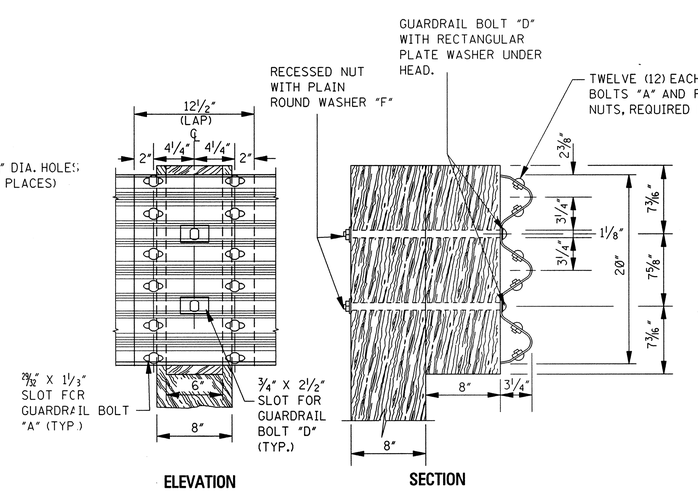

GUARDRAIL SPLICE DETAIL
(POST 3)

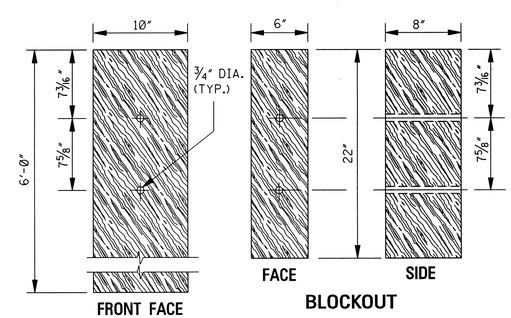

DETAILS OF THRIE–BEAM POST AND BLOCKOUT
(POST 1 AND POST 2)

NOTES:

1. HOLE DETAILS ARE REQUIRED ON ALL WOOD POSTS AND BLOCKOUTS.
2. WOOD POSTS AND BLOCKOUTS ARE FABRICATED FROM TREATED TIMBER UNLESS SPECIFIED OTHERWISE ON THE PLANS.
3. ALL HOLES IN BOTH POSTS AND BLOCKOUTS ARE 3/4" IN DIAMETER.

DATE	REVISION	BY
12-1-99	STANDARD "W" BEAM	S.W.R.

MISSISSIPPI DEPARTMENT OF TRANSPORTATION
ROADWAY DESIGN DIVISION
STANDARD PLAN

GUARDRAIL: BRIDGE END SECTION TYPE "I" (WOOD POSTS)

ENGLISH

WORKING NUMBER GR-2F

ISSUE DATE: OCTOBER 1, 1998

SHEET NUMBER 190

STATE	PROJECT NO.
MISS.	

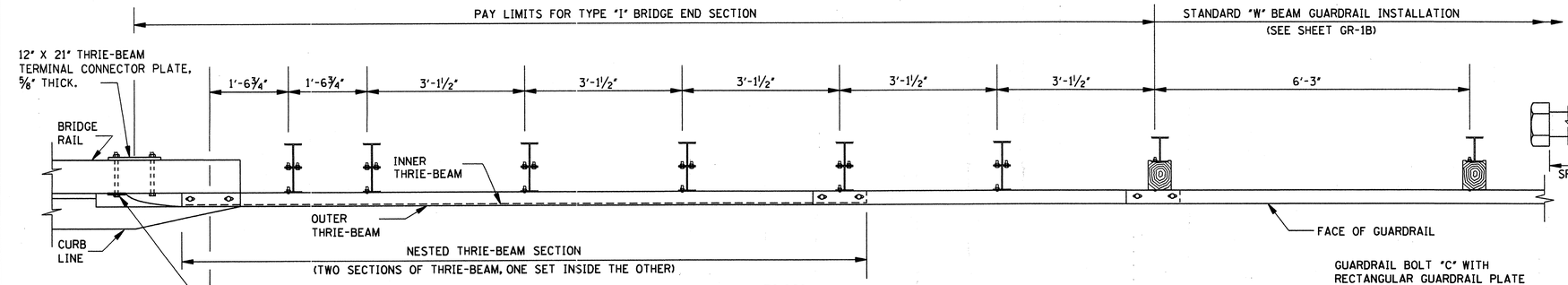

PLAN

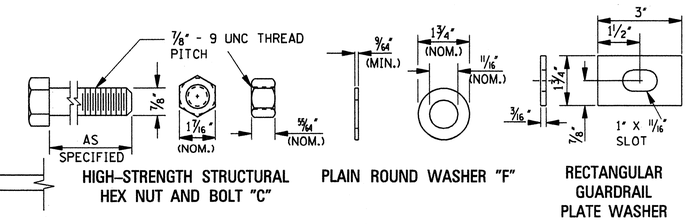

HIGH-STRENGTH STRUCTURAL HEX NUT AND BOLT "C"

PLAIN ROUND WASHER "F"

RECTANGULAR GUARDRAIL PLATE WASHER

FASTENER DETAILS

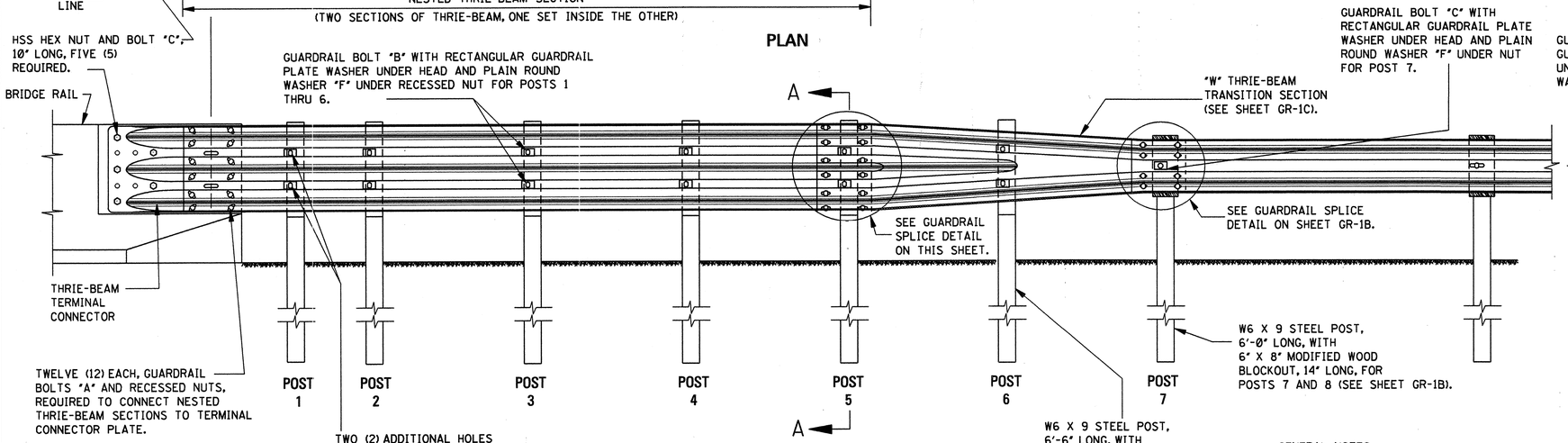

ELEVATION FROM ℄ ROADWAY

NOTE: BACKUP PLATES ARE NOT USED IN THIS TRANSITION.

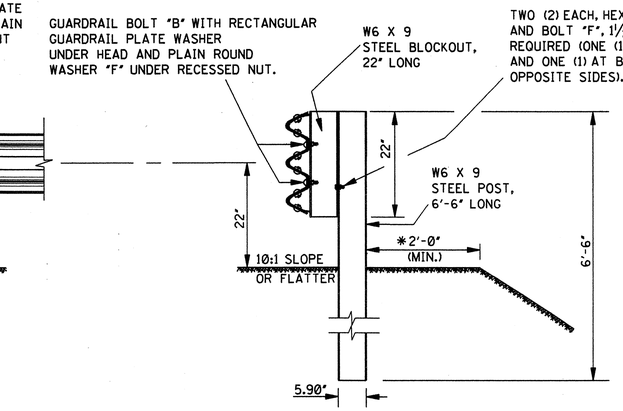

SECTION A–A

*NOTE: UNLESS SPECIFIED OTHERWISE ON THE PLANS.

GENERAL NOTES:

1. THIS GUARDRAIL TRANSITION IS APPROPRIATE FOR CONNECTION TO A MODIFIED RECEIVER CAST INTO A SAFETY SHAPE AND SHOULD NOT BE CONNECTED DIRECTLY TO A CONCRETE SAFETY SHAPE.
2. SEE RAILING DETAILS IN BRIDGE DRAWINGS FOR OTHER DETAILS.

GENERAL NOTES (CONTINUED):

3. GUARDRAIL SHALL MEET THE REQUIREMENTS OF AASHTO M 180, CLASS A, TYPE 1 UNLESS OTHERWISE DESIGNATED.
4. THE TYPE "I" TRANSITION IS USED ON BOTH LEFT AND RIGHT SIDES OF EACH BRIDGE APPROACH WITH 2-WAY TRAFFIC AND THE GUARDRAIL SECTIONS SHALL BE LAPPED IN THE DIRECTION OF THE APPROACHING TRAFFIC.
5. POSTS AND BLOCKOUTS SHALL CONFORM TO AASHTO M 270/M 270M (ASTM A 709/A 709M) GRADE 250 STEEL UNLESS CORROSION RESISTANT STEEL IS REQUIRED IN WHICH CASE GRADE 50W STEEL SHALL BE USED. THE STRUCTURAL W6 X 9 DIMENSIONS ARE DEFINED IN AASHTO M 160M (ASTM A 6M). THE SECTION SHOULD BE ZINC-COATED PER AASHTO M 111 (ASTM A 123) AFTER CUTTING, DRILLING AND PUNCHING. CORROSION RESISTANT STEEL SHOULD NOT BE ZINC-COATED PAINTED OR OTHERWISE TREATED. GUARDRAIL IS EXEMPT FROM THE FRACTURE-CRITICAL TOUGHNESS IN AASHTO M 270/A 270 M.
6. FOR FASTENER DETAILS NOT FOUND ON THIS SHEET, SEE SHEET GR-1B.
7. DETAILS PERTINENT TO THE STANDARD INSTALLATION OF "W" AND THRIE-BEAM SECTIONS NOT SPECIFICALLY MODIFIED ON THIS SHEET WILL BE FOUND ON SHEETS GR-1B AND GR-1C, RESPECTIVELY.
8. FOR OTHER DETAILS OF POSTS, POST ACCESSORIES, FASTENERS & RAIL ELEMENTS, SEE AASHTO-AGC-ARTBA JOINT TASK FORCE NO. 13, TITLED "A GUIDE TO STANDARDIZED HIGHWAY BARRIER HARDWARE," LATEST EDITION.

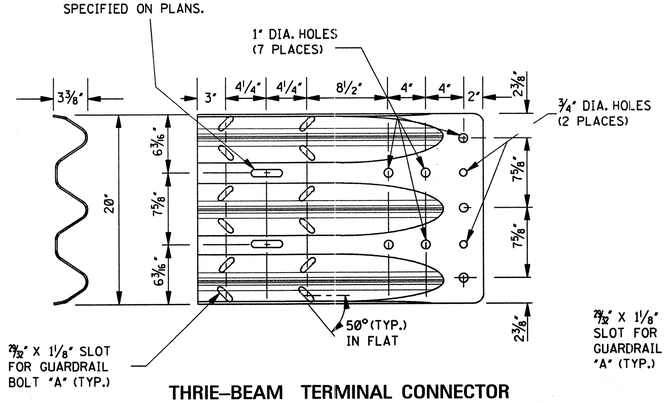

THRIE-BEAM TERMINAL CONNECTOR

NOTES:

1. THE THRIE-BEAM TERMINAL CONNECTOR IS TO BE AASHTO M 180 CORRUGATED SHEET STEEL, CLASS B, TYPE I.
2. ALTERNATIVELY, THE SPLICE SLOTS CAN BE ORIENTED PARALLEL TO THE LONGITUDINAL AXIS OF THE TERMINAL CONNECTOR. HOWEVER, THE 50° SLOT VERSION IS EASIER TO INSTALL WHERE SEVERAL GUARDRAIL SECTIONS ARE NESTED TOGETHER.

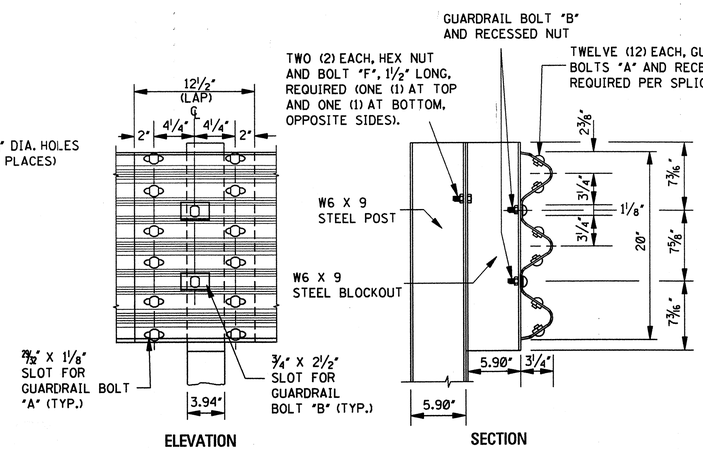

GUARDRAIL SPLICE DETAIL

(POST 5)

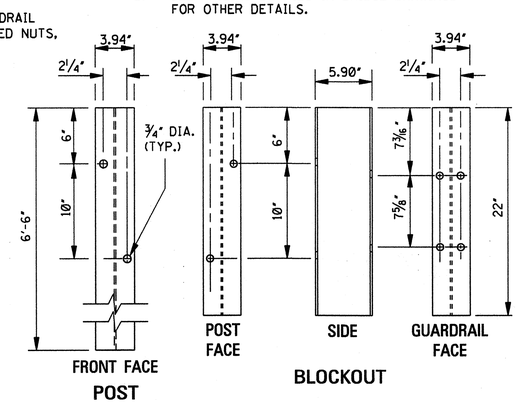

DETAILS OF THRIE-BEAM POST AND BLOCKOUT

(POST 1 THRU POST 6)

NOTES:

1. HOLE DETAILS ARE REQUIRED FOR POSTS AND BLOCKOUTS 1 THRU 6.
2. STEEL POSTS AND BLOCKOUTS ARE FABRICATED FROM W6 X 9 STRUCTURAL STEEL SHAPES.
3. ALL HOLES IN BOTH POSTS AND BLOCKOUTS ARE 3/4" IN DIAMETER.

DATE	REVISION	BY

MISSISSIPPI DEPARTMENT OF TRANSPORTATION
ROADWAY DESIGN DIVISION
STANDARD PLAN

GUARDRAIL: BRIDGE END SECTION TYPE "I"

(STEEL POSTS)

ENGLISH

WORKING NUMBER GR-2G

ISSUE DATE: OCTOBER 1, 1998

SHEET NUMBER 191

STATE	PROJECT NO.
MISS.	

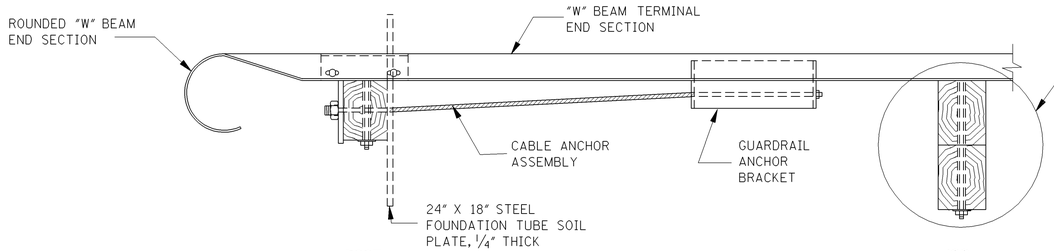

PLAN

NOTE: THE "POST 2" ASSEMBLY DEPENDS ON WHETHER THE TRAILING END TERMINAL IS ATTACHED TO THE STANDARD WOOD OR STEEL POST "W" BEAM GUARDRAIL INSTALLATION AS FOLLOWS:

1. WOOD POST INSTALLATION (SHOWN)
   "W" BEAM TERMINAL RAIL SECTION, 6" X 8" WOOD BLOCKOUT, 14" LONG, AND 6" X 8" WOOD POST, 5'-4" LONG, ATTACHED WITH GUARDRAIL BOLT "D" AND RECESSED NUT. INSTALL RECTANGULAR GUARDRAIL PLATE WASHER UNDER HEAD AND PLAIN ROUND WASHER "F" UNDER RECESSED NUT.
2. STEEL POST INSTALLATION
   "W" BEAM TERMINAL RAIL SECTION, 6" X 8" MODIFIED WOOD BLOCKOUT, 14" LONG, AND W6 X 9 STEEL POST, 6'-0" LONG, ATTACHED WITH GUARDRAIL BOLT "C" AND RECESSED NUT. INSTALL RECTANGULAR GUARDRAIL PLATE WASHER UNDER GUARDRAIL BOLT HEAD.

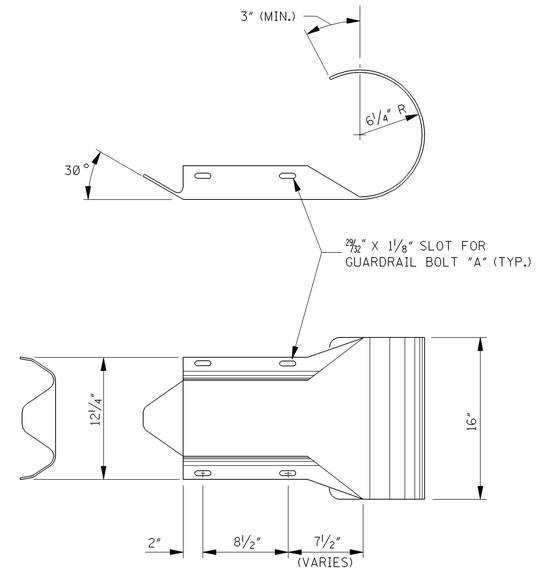

ROUNDED "W" BEAM END SECTION

NOTE: THE CROSS-SECTIONAL DIMENSIONS FOR THIS PART ARE TO FIT OVER THE STANDARD "W" BEAM SECTION.

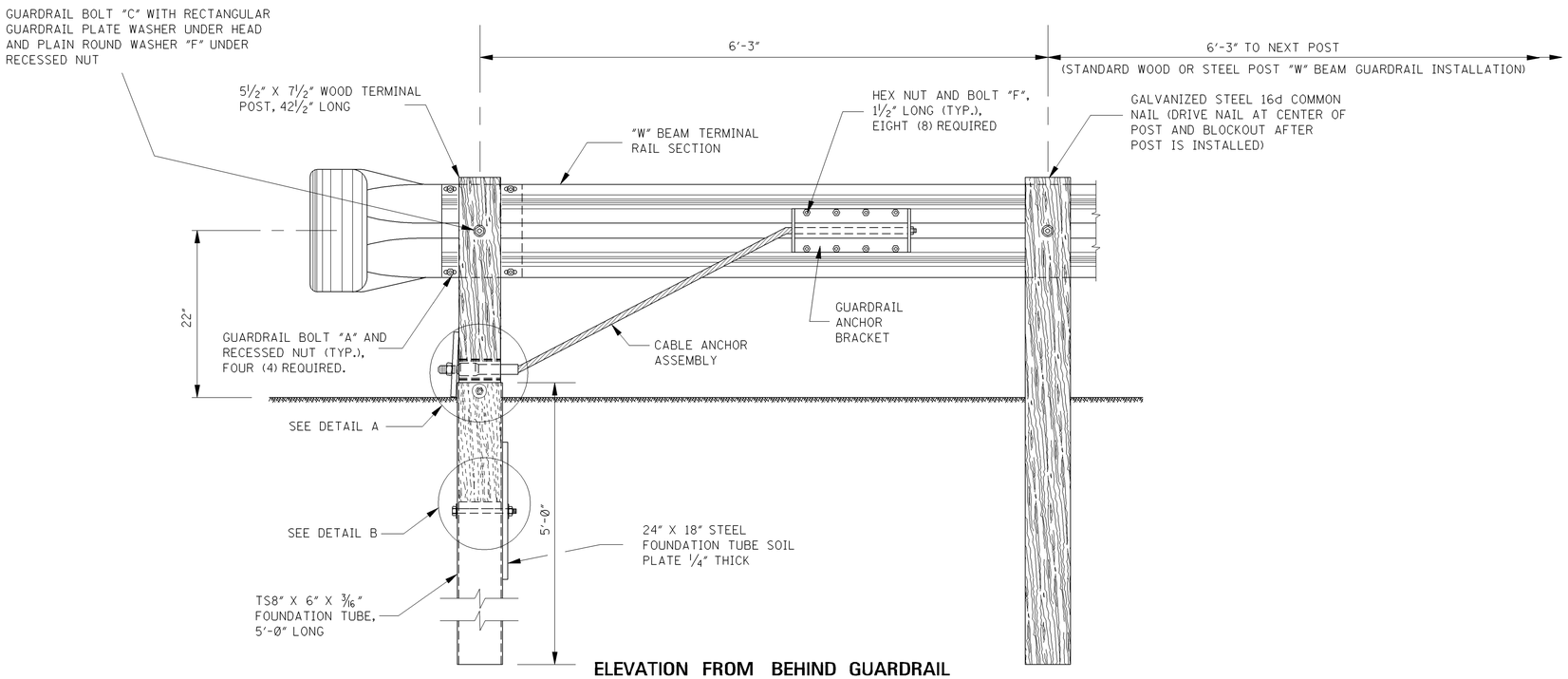

ELEVATION FROM BEHIND GUARDRAIL

NOTE: ANCHOR CABLE SHALL BE TAUT.

GENERAL NOTES:

1. THIS ANCHORAGE MAY ONLY BE USED ON THE TRAILING END OF A BARRIER WHICH IS NOT EXPOSED TO VEHICULAR IMPACT.
2. GUARDRAIL SHALL MEET THE REQUIREMENTS OF AASHTO M 180, CLASS A, TYPE 1 UNLESS OTHERWISE DESIGNATED.
3. ALL WOOD POSTS AND BLOCKOUTS SHALL BE TREATED TIMBER IN ACCORDANCE WITH MISSISSIPPI DEPARTMENT OF TRANSPORTATION STANDARD SPECIFICATIONS.
4. FOR DETAILS OF HARDWARE AND COMPONENTS NOT FOUND ON THIS SHEET, SEE SHEET GR-HW. △1
5. DETAILS PERTINENT TO THE STANDARD INSTALLATION OF "W" BEAM SECTIONS WILL BE FOUND ON SHEET GR-1, FOR WOOD POSTS, AND GR-1B, FOR STEEL POSTS.
6. FOR OTHER DETAILS OF POSTS, POST ACCESSORIES, FASTENERS AND RAIL ELEMENTS, SEE AASHTO-AGC-ARTBA JOINT TASK FOR NO. 13, TITLED "A GUIDE TO STANDARDIZED HIGHWAY BARRIER HARDWARE," LATEST EDITION.

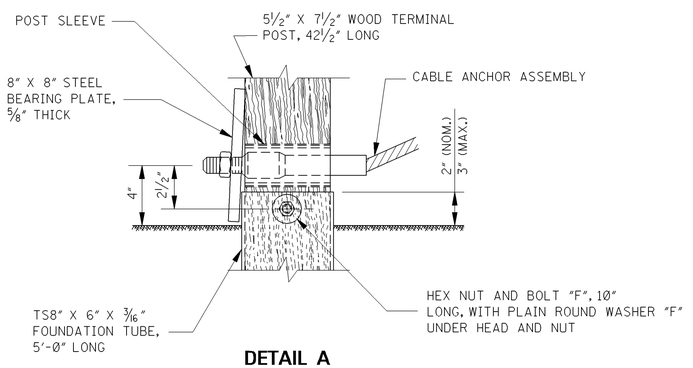

DETAIL A

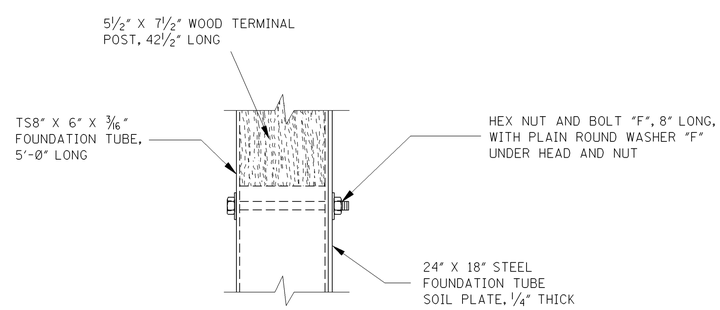

DETAIL B

DATE	REVISION	BY
3-01-02	REVISE NOTE	S.W.R.

MISSISSIPPI DEPARTMENT OF TRANSPORTATION
ROADWAY DESIGN DIVISION
STANDARD PLAN

GUARDRAIL:
TYPE 1 CABLE ANCHORAGE
(FOUNDATION TUBE)

ENGLISH

WORKING NUMBER GR-3

ISSUE DATE: OCTOBER 1, 1998

SHEET NUMBER 192

STATE	PROJECT NO.
MISS.	

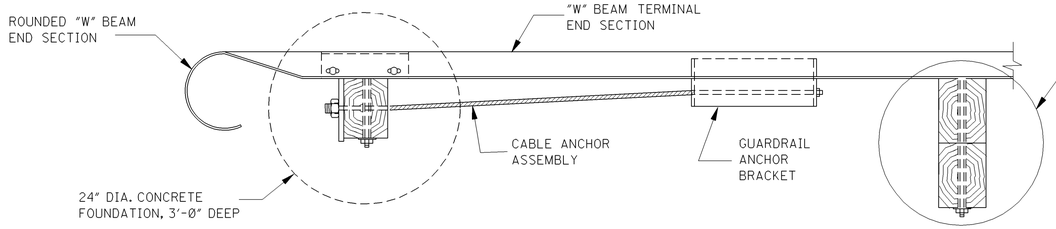

POST 1 POST 2

PLAN

NOTE: THE "POST 2" ASSEMBLY DEPENDS ON WHETHER THE TRAILING END TERMINAL IS ATTACHED TO THE STANDARD WOOD OR STEEL POST "W" BEAM GUARDRAIL INSTALLATION AS FOLLOWS:

1. WOOD POST INSTALLATION (SHOWN)
   "W" BEAM TERMINAL RAIL SECTION, 6" X 8" WOOD BLOCKOUT, 14" LONG, AND 6" X 8" WOOD POST, 5'-4" LONG, ATTACHED WITH GUARDRAIL BOLT "D" AND RECESSED NUT. INSTALL RECTANGULAR GUARDRAIL PLATE WASHER UNDER HEAD AND PLAIN ROUND WASHER "F" UNDER RECESSED NUT.
2. STEEL POST INSTALLATION
   "W" BEAM TERMINAL RAIL SECTION, 6" X 8" MODIFIED WOOD BLOCKOUT, 14" LONG, AND W6 X 9 STEEL POST, 6'-0" LONG, ATTACHED WITH GUARDRAIL BOLT "C" AND RECESSED NUT. INSTALL RECTANGULAR GUARDRAIL PLATE WASHER UNDER GUARDRAIL BOLT HEAD.

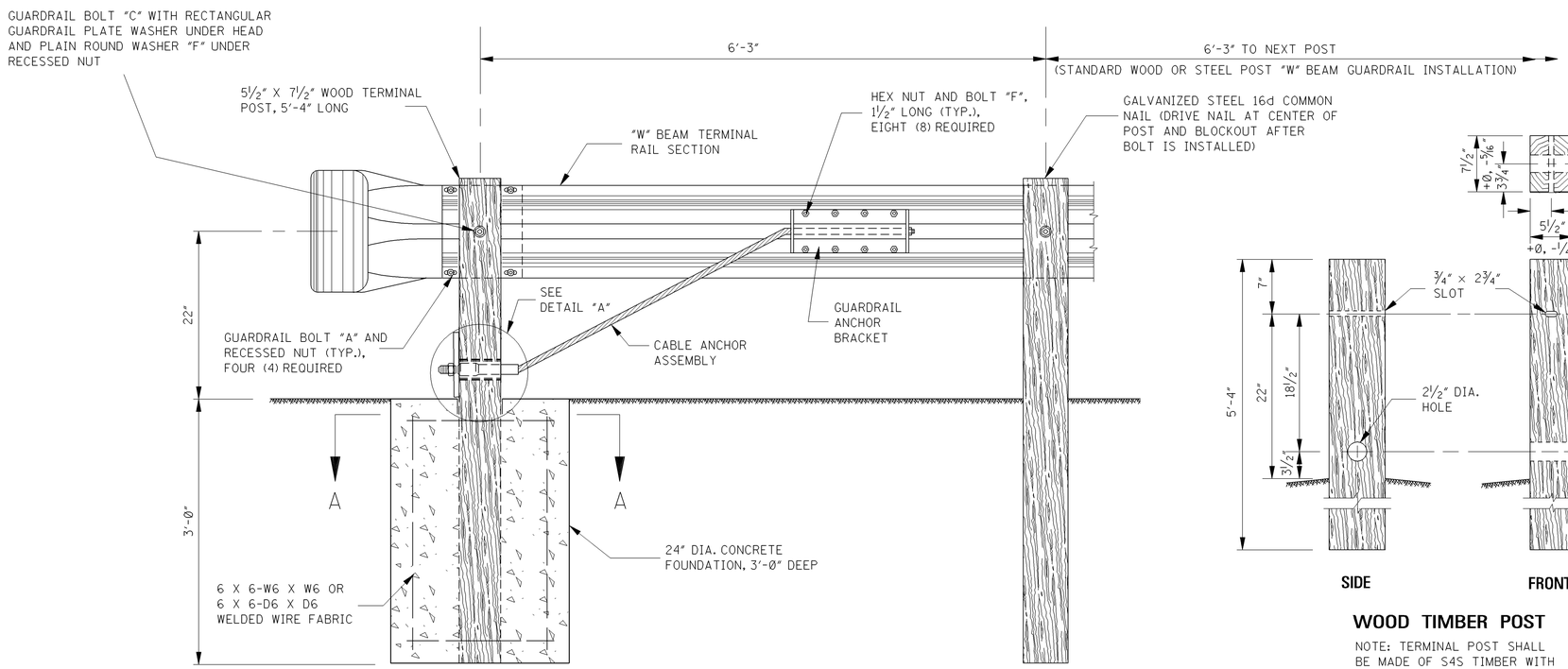

ELEVATION FROM BEHIND GUARDRAIL

NOTE: ANCHOR CABLE SHALL BE TAUT.

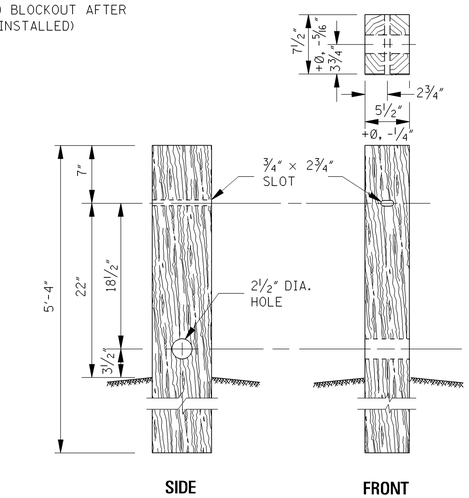

WOOD TIMBER POST

NOTE: TERMINAL POST SHALL BE MADE OF S4S TIMBER WITH STRESS GRADE OF 1200 lb/in².

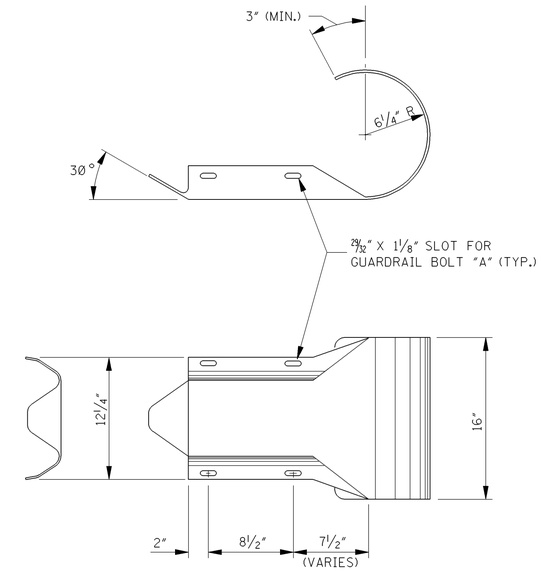

ROUNDED "W" BEAM END SECTION

NOTE: THE CROSS-SECTIONAL DIMENSIONS FOR THIS PART ARE TO FIT OVER THE STANDARD "W" BEAM SECTION.

GENERAL NOTES:

1. THIS ANCHORAGE MAY ONLY BE USED ON THE TRAILING END OF A BARRIER WHICH IS NOT EXPOSED TO VEHICULAR IMPACT.
2. GUARDRAIL SHALL MEET THE REQUIREMENTS OF AASHTO M 180, CLASS A, TYPE 1 UNLESS OTHERWISE DESIGNATED.
3. ALL WOOD POSTS AND BLOCKOUTS SHALL BE TREATED TIMBER IN ACCORDANCE WITH MISSISSIPPI DEPARTMENT OF TRANSPORTATION STANDARD SPECIFICATIONS.
4. CONCRETE FOR THE CONCRETE FOUNDATION MAY BE EITHER CLASS "B" STRUCTURAL CONCRETE OR AN APPROVED COMMERCIAL PRE-MIXED BAG CONCRETE. THE WELDED WIRE FABRIC FOR THE CONCRETE FOUNDATION SHALL CONFORM TO AASHTO M 221/M 221M AND AASHTO M 55M/M 55.
5. FOR DETAILS OF HARDWARE AND COMPONENTS NOT FOUND ON THIS SHEET, SEE SHEET GR-HW. △1
6. DETAILS PERTINENT TO THE STANDARD INSTALLATION OF "W" BEAM SECTIONS WILL BE FOUND ON SHEET GR-1, FOR WOOD POSTS, AND GR-1B, FOR STEEL POSTS.
7. FOR OTHER DETAILS OF POSTS, POST ACCESSORIES, FASTENERS AND RAIL ELEMENTS, SEE AASHTO-AGC-ARTBA JOINT TASK FOR NO. 13, TITLED "A GUIDE TO STANDARDIZED HIGHWAY BARRIER HARDWARE," LATEST EDITION.

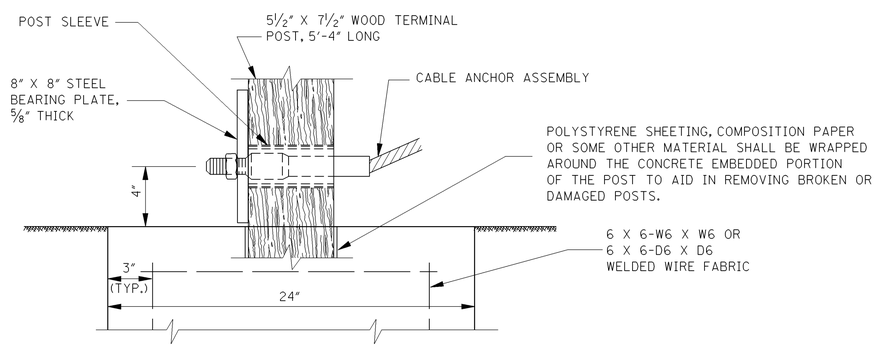

DETAIL A

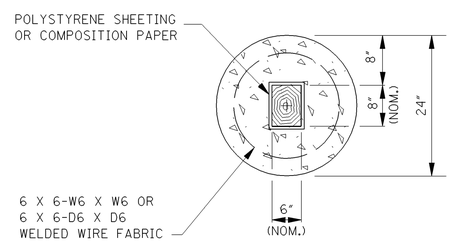

SECTION A–A

NOTE: FORM A NOMINAL 6" X 8" SOCKET IN THE FOUNDATION TO RECEIVE THE 5½" X 7½" TIMBER POST. FORM HOLE WITH ½" THICK POLYSTYRENE FOAM SHEETING OR WRAP THE TIMBER POST IN A DOUBLE LAYER OF COMPOSITION PAPER. THE LAYER OF SHEETING OR PAPER WILL AID IN REMOVING A DAMAGED POST.

DATE	REVISION	BY
3-01-02	REVISE NOTE	S.W.R.

MISSISSIPPI DEPARTMENT OF TRANSPORTATION
ROADWAY DESIGN DIVISION
STANDARD PLAN

GUARDRAIL: TYPE 1 CABLE ANCHORAGE (CONCRETE FOOTING)

ENGLISH

WORKING NUMBER GR-3A

ISSUE DATE: OCTOBER 1, 1998

SHEET NUMBER 193

STATE	PROJECT NO.
MISS.	

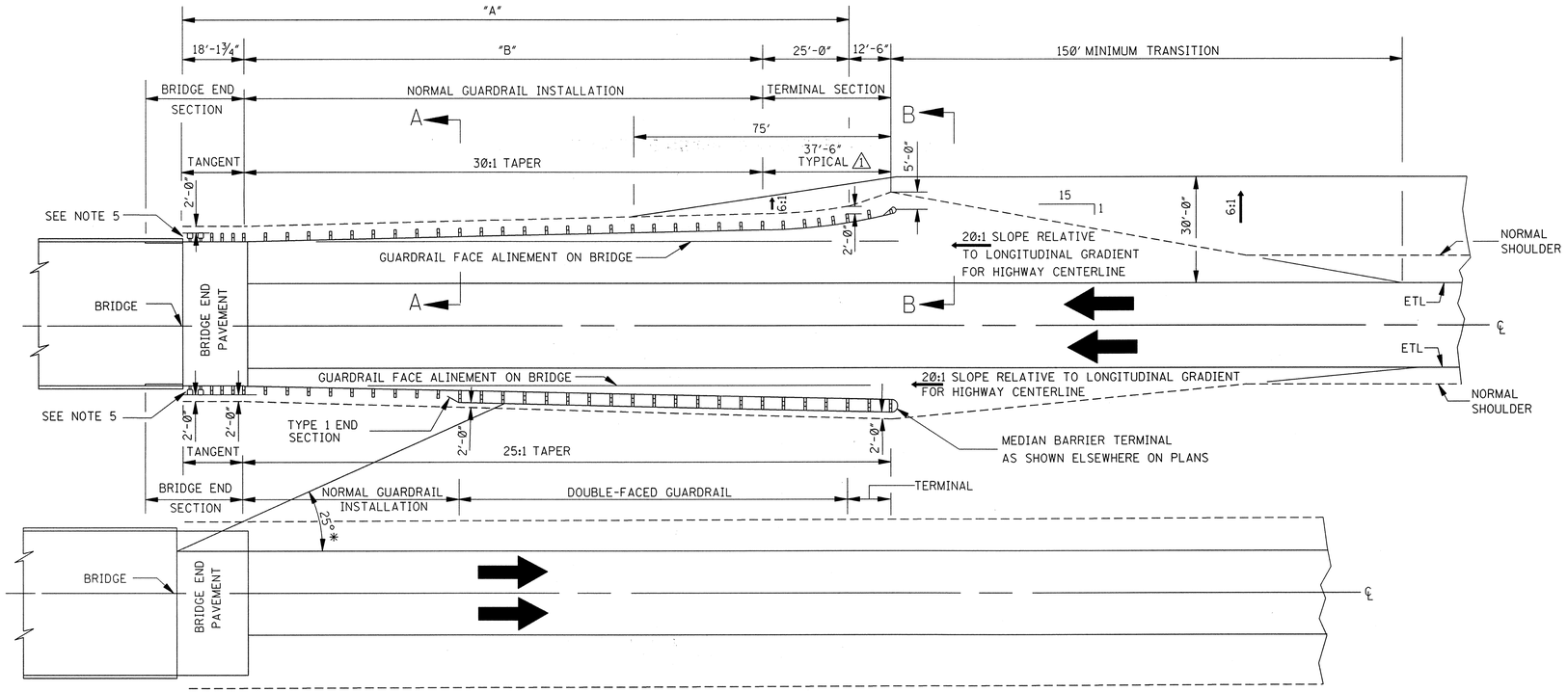

DIVIDED HIGHWAY WITH BARRIER INSIDE CLEAR ZONE OF OPPOSING TRAFFIC

*NOTE: THE 25° LINE IS USED TO DETERMINE THE LIMITS OF MEDIAN BARRIER AS SHOWN.

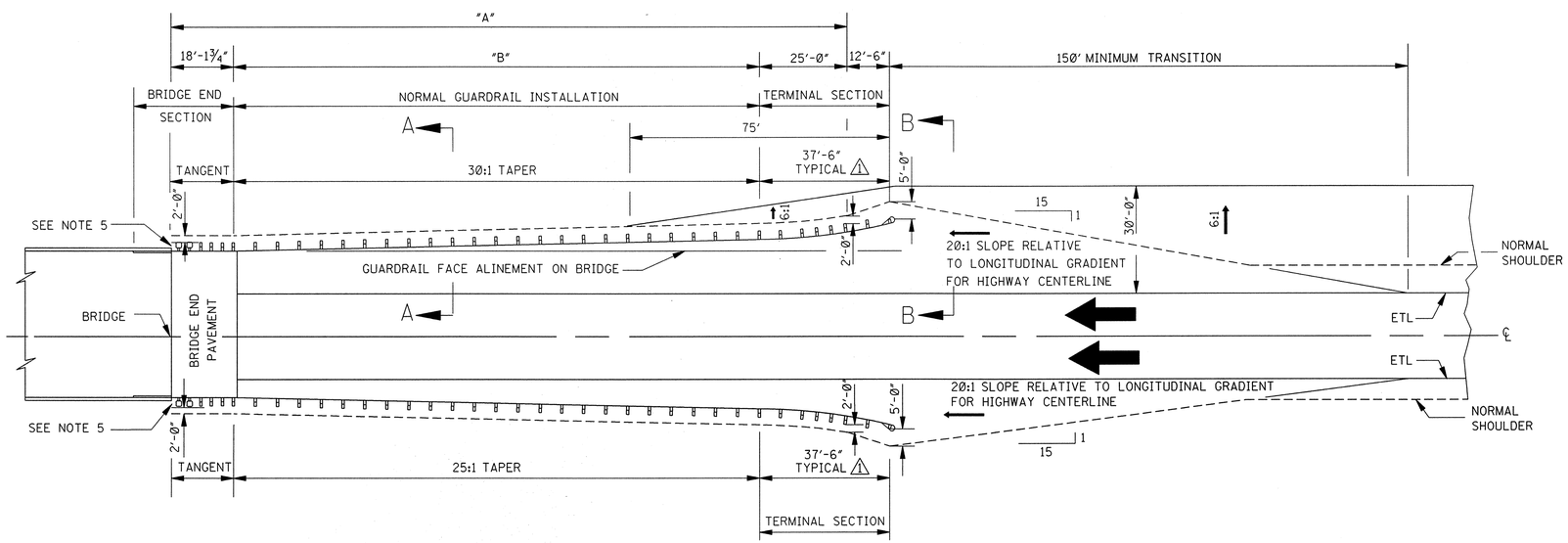

DIVIDED HIGHWAY WITH BARRIER OUTSIDE CLEAR ZONE OF OPPOSING TRAFFIC

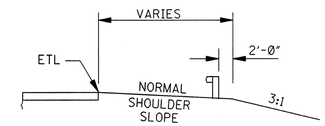

SECTION A–A

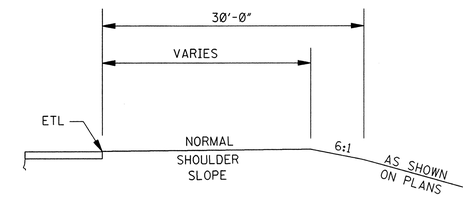

SECTION B–B

GENERAL NOTES:

1. VALUES FOR "A" AND "B" WILL BE SHOWN ELSEWHERE ON THE PLANS.
2. ⚠1 FOR DETAILS PERTINENT TO INSTALLATION OF THE TERMINAL SECTION, SEE MANUFACTURER'S SPECIFICATIONS AND DRAWINGS OR ELSEWHERE ON PLANS
3. GUARDRAIL SECTIONS ARE TO BE LAPPED IN THE DIRECTION OF TRAFFIC FLOW NEAREST THE GUARDRAIL FACE.
4. THE OVERALL LENGTH OF GUARDRAIL IS MEASURED FROM THE CONNECTING END ON THE BRIDGE.
5. THE SHOULDER WIDTH AT THE BRIDGE END SHALL BE SUFFICIENTLY WIDE TO PROVIDE A MINIMUM OF 2'-0" BEHIND THE BACK OF POST BEFORE THE SLOPE BREAK (HINGEPOINT).
6. TYPE, DETAILS AND LIMITS OF GUARDRAIL BRIDGE END SECTION WILL BE SHOWN ELSEWHERE ON THE PLANS.

DATE	REVISION	BY
12-1-98	REVISED NOTE	S.W.R.

MISSISSIPPI DEPARTMENT OF TRANSPORTATION
ROADWAY DESIGN DIVISION
STANDARD PLAN

GUARDRAIL: TYPICAL INSTALLATION AT BRIDGE APPROACHES FOR DIVIDED HIGHWAYS

ENGLISH

WORKING NUMBER GR-4

SHEET NUMBER 194

ISSUE DATE: OCTOBER 1, 1998

STATE	PROJECT NO.
MISS.	

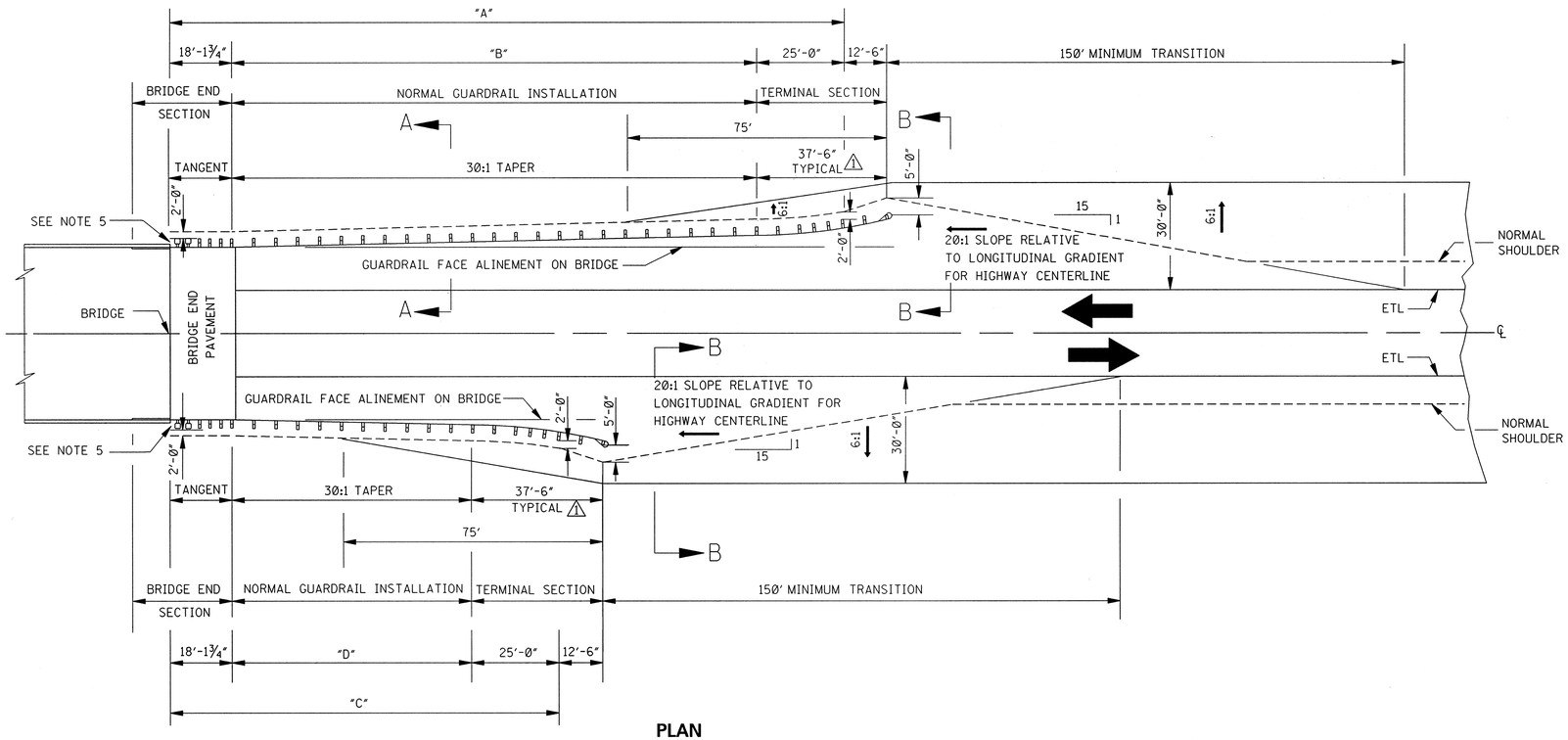

PLAN

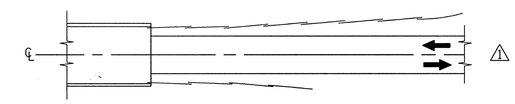

DETAIL OF GUARDRAIL SECTION LAPS

GENERAL NOTES:

1. VALUES FOR "A", "B", "C" AND "D" WILL BE SHOWN ELSEWHERE ON THE PLANS.

⚠1 2. FOR DETAILS PERTINENT TO INSTALLATION OF THE TERMINAL SECTION, SEE MANUFACTURER'S SPECIFICATIONS AND DRAWINGS OR ELSEWHERE ON PLANS

3. GUARDRAIL SECTIONS ARE TO BE LAPPED IN THE DIRECTION OF TRAFFIC APPROACHING THE BRIDGE.

4. THE OVERALL LENGTH OF GUARDRAIL IS MEASURED FROM THE CONNECTING END ON THE BRIDGE.

5. THE SHOULDER WIDTH AT THE BRIDGE END SHALL BE SUFFICIENTLY WIDE TO PROVIDE A MINIMUM OF 2'-0" BEHIND THE BACK OF POST BEFORE THE SLOPE BREAK (HINGEPOINT).

6. TYPE, DETAILS AND LIMITS OF GUARDRAIL BRIDGE END SECTION WILL BE SHOWN ELSEWHERE ON THE PLANS.

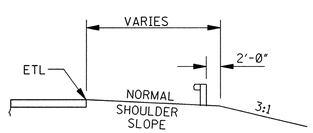

SECTION A–A

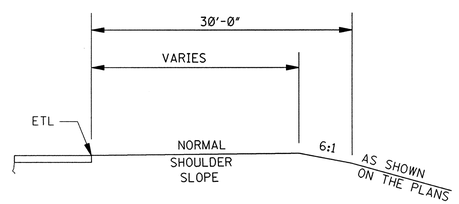

SECTION B–B

DATE	REVISION	BY
12-1-99	REVISED NOTE & RAIL LENGTH	S.W.R.

MISSISSIPPI DEPARTMENT OF TRANSPORTATION
ROADWAY DESIGN DIVISION
STANDARD PLAN

GUARDRAIL: TYPICAL INSTALLATION AT BRIDGE APPROACHES FOR 2-LANE, 2-WAY HIGHWAY

ENGLISH

WORKING NUMBER GR-4A

ISSUE DATE: OCTOBER 1, 1998

SHEET NUMBER 195

STATE	PROJECT NO.
MISS.	

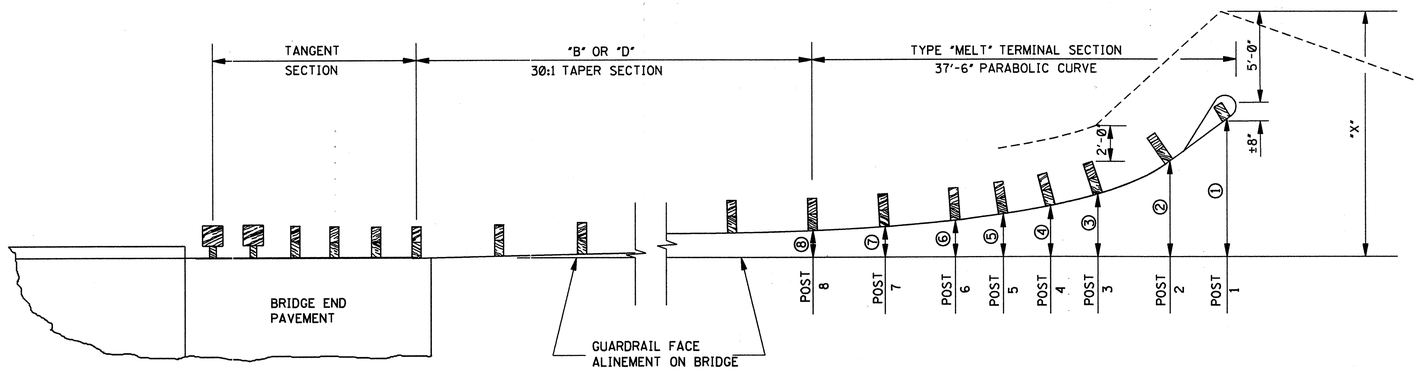

TYPE "MELT" POST OFFSETS FOR NORMAL GUARDRAIL INSTALLATION ON 30:1 TAPER

TYPE "MELT" POST OFFSETS FOR NORMAL GUARDRAIL INSTALLATION ON 30:1 TAPER										
"B" OR "D" (ft-in)	NO. OF 12'-6" SECTIONS FOR "B" OR "D"	TYPE "MELT" POST OFFSETS (ft-in)								
		⑧	⑦	⑥	⑤	④	③	②	①	"X"
12'-6"	1	0'-8"	1'-0"	1'-4"	1'-7"	2'-1"	2'-8"	3'-10"	5'-11"	11'-7"
25'-0"	2	1'-1"	1'-5"	1'-9"	2'-0"	2'-5"	3'-1"	4'-3"	6'-4"	12'-0"
37'-6"	3	1'-6"	1'-10"	2'-2"	2'-5"	2'-10"	3'-6"	4'-8"	6'-9"	12'-5"
50'-0"	4	1'-11"	2'-3"	2'-7"	2'-10"	3'-3"	3'-11"	5'-1"	7'-2"	12'-10"
62'-6"	5	2'-4"	2'-8"	3'-0"	3'-3"	3'-8"	4'-4"	5'-6"	7'-7"	13'-3"
75'-0"	6	2'-9"	3'-1"	3'-5"	3'-8"	4'-1"	4'-9"	5'-11"	8'-0"	13'-8"
87'-6"	7	3'-2"	3'-6"	3'-10"	4'-1"	4'-6"	5'-2"	6'-4"	8'-5"	14'-1"
100'-0"	8	3'-7"	3'-11"	4'-3"	4'-6"	4'-11"	5'-7"	6'-9"	8'-10"	14'-6"
112'-6"	9	4'-0"	4'-4"	4'-8"	4'-11"	5'-4"	6'-0"	7'-2"	9'-3"	14'-11"
125'-0"	10	4'-5"	4'-9"	5'-1"	5'-4"	5'-9"	6'-5"	7'-7"	9'-8"	15'-4"
137'-6"	11	4'-10"	5'-2"	5'-6"	5'-9"	6'-2"	6'-10"	8'-0"	10'-1"	15'-9"
150'-0"	12	5'-3"	5'-7"	5'-11"	6'-2"	6'-7"	7'-3"	8'-5"	10'-6"	16'-2"
162'-6"	13	5'-8"	6'-0"	6'-4"	6'-7"	7'-0"	7'-8"	8'-10"	10'-11"	16'-7"
175'-0"	14	6'-1"	6'-5"	6'-9"	7'-0"	7'-5"	8'-1"	9'-3"	11'-4"	17'-0"

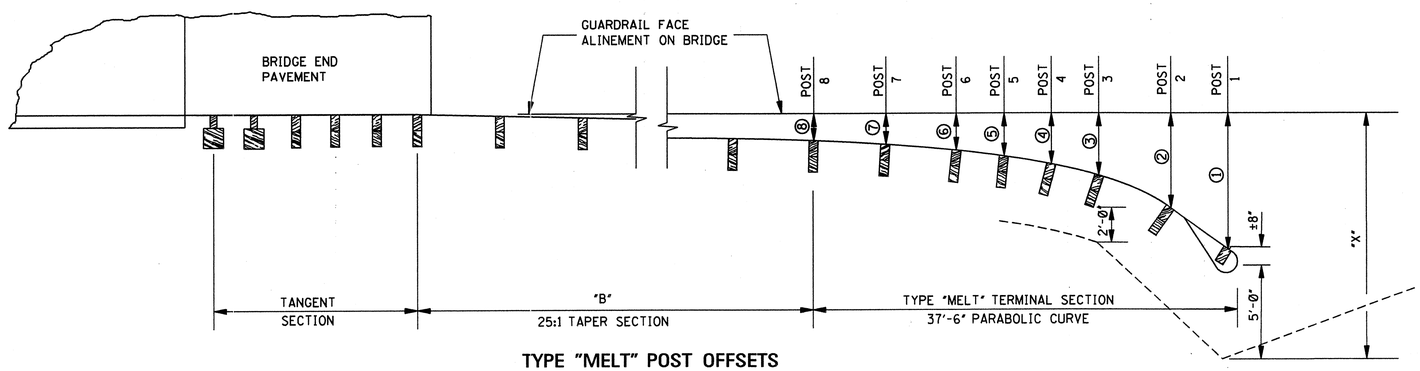

TYPE "MELT" POST OFFSETS FOR NORMAL GUARDRAIL INSTALLATION ON 25:1 TAPER

TYPE "MELT" POST OFFSETS FOR NORMAL GUARDRAIL INSTALLATION ON 25:1 TAPER										
"B" (ft-in)	NO. OF 12'-6" SECTIONS FOR "B"	TYPE "MELT" POST OFFSETS (ft-in)								
		⑧	⑦	⑥	⑤	④	③	②	①	"X"
12'-6"	1	0'-9"	1'-1"	1'-6"	1'-9"	2'-3"	2'-11"	4'-1"	6'-3"	11'-11"
25'-0"	2	1'-3"	1'-7"	2'-0"	2'-3"	2'-9"	3'-5"	4'-7"	6'-9"	12'-5"
37'-6"	3	1'-9"	2'-1"	2'-6"	2'-9"	3'-3"	3'-11"	5'-1"	7'-3"	12'-11"
50'-0"	4	2'-3"	2'-7"	3'-0"	3'-3"	3'-9"	4'-5"	5'-7"	7'-9"	13'-5"
62'-6"	5	2'-9"	3'-1"	3'-6"	3'-9"	4'-3"	4'-11"	6'-1"	8'-3"	13'-11"
75'-0"	6	3'-3"	3'-7"	4'-0"	4'-3"	4'-9"	5'-5"	6'-7"	8'-9"	14'-5"
87'-6"	7	3'-9"	4'-1"	4'-6"	4'-9"	5'-3"	5'-11"	7'-1"	9'-3"	14'-11"
100'-0"	8	4'-3"	4'-7"	5'-0"	5'-3"	5'-9"	6'-5"	7'-7"	9'-9"	15'-5"
112'-6"	9	4'-9"	5'-1"	5'-6"	5'-9"	6'-3"	6'-11"	8'-1"	10'-3"	15'-11"
125'-0"	10	5'-3"	5'-7"	6'-0"	6'-3"	6'-9"	7'-5"	8'-7"	10'-9"	16'-5"
137'-6"	11	5'-9"	6'-1"	6'-6"	6'-9"	7'-3"	7'-11"	9'-1"	11'-3"	16'-11"
150'-0"	12	6'-3"	6'-7"	7'-0"	7'-3"	7'-9"	8'-5"	9'-7"	11'-9"	17'-5"
162'-6"	13	6'-9"	7'-1"	7'-6"	7'-9"	8'-3"	8'-11"	10'-1"	12'-3"	17'-11"
175'-0"	14	7'-3"	7'-7"	8'-0"	8'-3"	8'-9"	9'-5"	10'-7"	12'-9"	18'-5"

GENERAL NOTES:

1. SEE SHEETS GR-4 AND GR-4A FOR TYPICAL INSTALLATION OF GUARDRAIL AT BRIDGE APPROACHES FOR DIVIDED AND 2-LANE, 2-WAY HIGHWAYS, RESPECTIVELY.
2. VALUES FOR "B" AND "D" ARE SHOWN ELSEWHERE ON THE PLANS.
3. ALL POST OFFSETS FOR TYPE "MELT" TERMINAL SECTIONS ARE MEASURED FROM GUARDRAIL FACE ALINEMENT ON BRIDGE.
4. POST OFFSETS ARE GIVEN TO THE CENTER OF THE TRAFFIC FACE OF THE BLOCKOUTS AND TO THE CENTER OF THE FIRST POST FACE. OFFSET POINTS ARE TO BE LOCATED BY CHORD MEASUREMENTS AT THE BACK OF RAIL EQUAL TO THE NOMINAL POST SPACINGS SHOWN. POSTS ARE TO BE SET APPROXIMATELY RADIAL TO THE RAILING AT EACH POST LOCATION.

DATE	REVISION	BY

MISSISSIPPI DEPARTMENT OF TRANSPORTATION
ROADWAY DESIGN DIVISION
STANDARD PLAN

GUARDRAIL: POST OFFSETS FOR TYPE "MELT" TERMINAL SECTION AT BRIDGE APPROACHES

DEPARTMENT OF TRANSPORTATION MISSISSIPPI ENGLISH

WORKING NUMBER GR-4B

ISSUE DATE: OCTOBER 1, 1998

SHEET NUMBER 196

STATE	PROJECT NO.
MISS.	

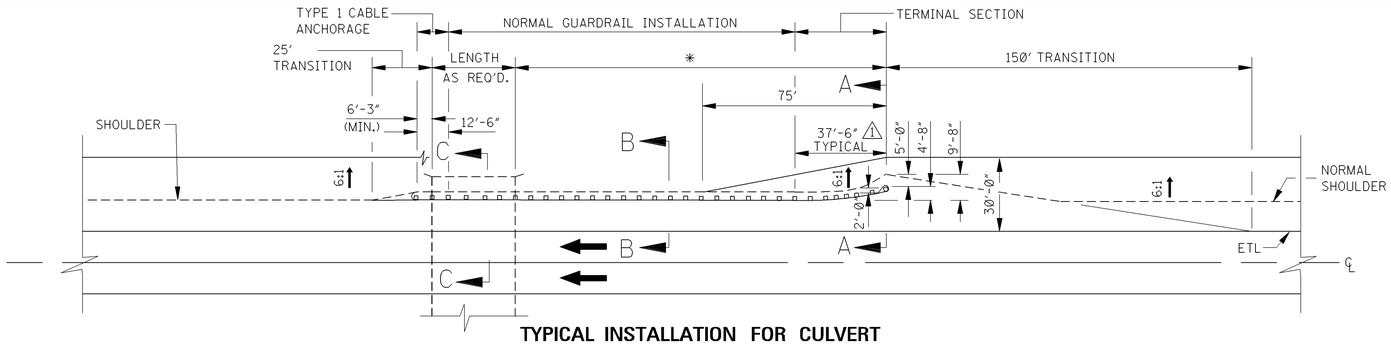

TYPICAL INSTALLATION FOR CULVERT

NOTE: DISTANCE REQUIRED SHOWN ELSEWHERE ON PLANS.

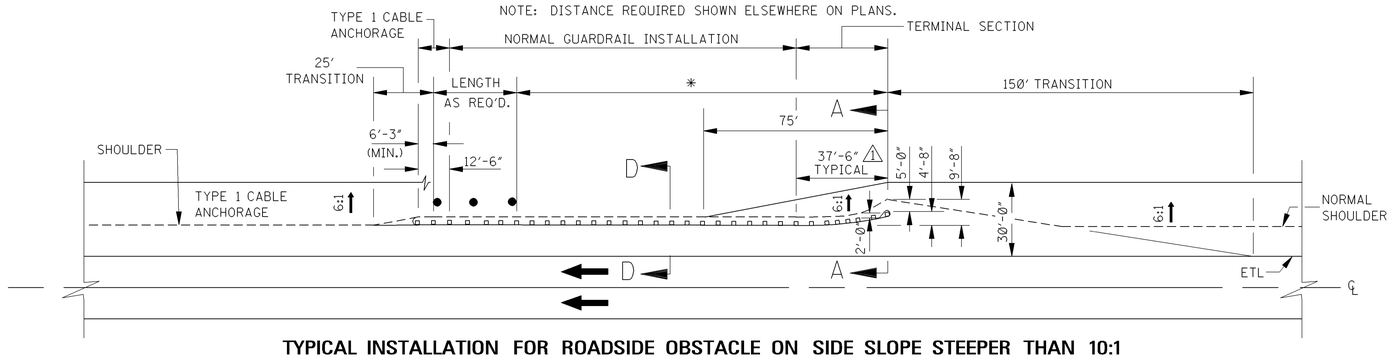

TYPICAL INSTALLATION FOR ROADSIDE OBSTACLE ON SIDE SLOPE STEEPER THAN 10:1

* NOTE: DISTANCE REQUIRED SHOWN ELSEWHERE ON PLANS.

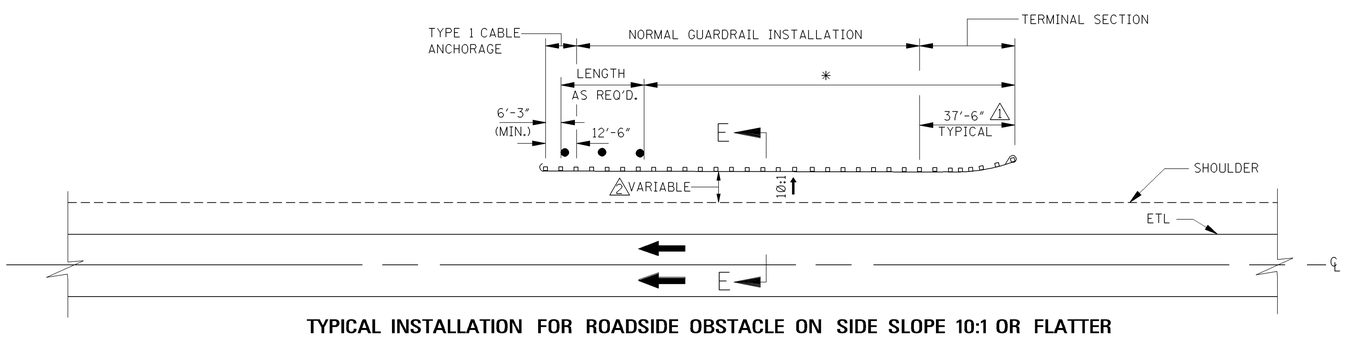

TYPICAL INSTALLATION FOR ROADSIDE OBSTACLE ON SIDE SLOPE 10:1 OR FLATTER

* NOTE: DISTANCE REQUIRED SHOWN ELSEWHERE ON PLANS.

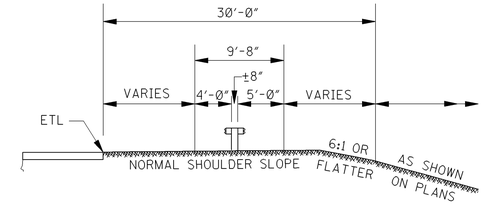

SECTION A–A

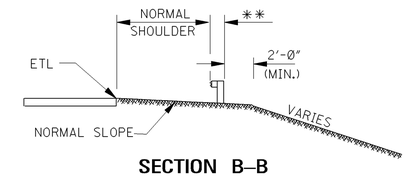

SECTION B–B

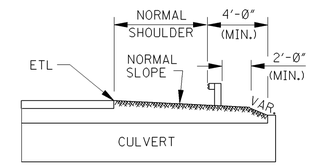

**NOTE: FOR STEEL POST AND MODIFIED WOOD BLOCKOUT, 17.15". FOR WOOD POST AND BLOCKOUT, 19.25".

SECTION C–C

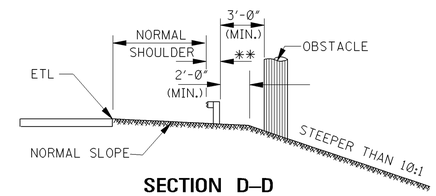

SECTION D–D

FOR OBSTACLES 5' TO 17' FROM NORMAL SHOULDER

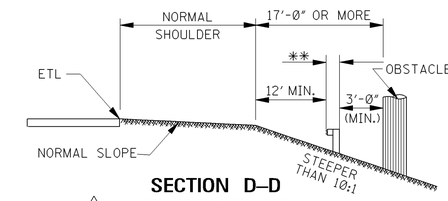

SECTION D–D

FOR OBSTACLES 17' OR MORE FROM NORMAL SHOULDER

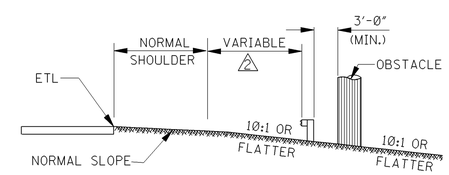

SECTION E–E

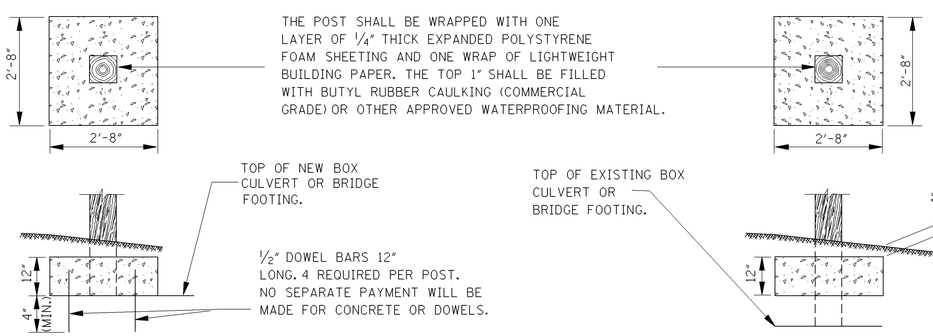

DETAIL OF POST INSTALLATION WITH COVER LESS THAN NORMAL POST LENGTH

GENERAL NOTES:

1. FOR DETAILS PERTINENT TO INSTALLATION OF THE TERMINAL SECTION, SEE MANUFACTURER'S SPECIFICATIONS AND DRAWINGS OR ELSEWHERE ON PLANS
2. GUARDRAIL SECTIONS TO BE LAPPED IN THE DIRECTION OF TRAFFIC FLOW NEAREST THE GUARDRAIL FACE.
3. PAY LIMITS FOR NORMAL GUARDRAIL INSTALLATION WILL BE THE TOTAL LENGTH LESS THE LENGTHS OF END TERMINALS.

DATE	REVISION	BY
3-01-02	REVISED DETAIL	S.W.R.
12-1-99	REVISED NOTE	S.W.R.

MISSISSIPPI DEPARTMENT OF TRANSPORTATION
ROADWAY DESIGN DIVISION
STANDARD PLAN

GUARDRAIL: TYPICAL INSTALLATION FOR ROADSIDE HAZARDS ON DIVIDED HIGHWAYS

ENGLISH

WORKING NUMBER GR-4C

ISSUE DATE: OCTOBER 1, 1998

SHEET NUMBER 197

STATE	PROJECT NO.
MISS.	

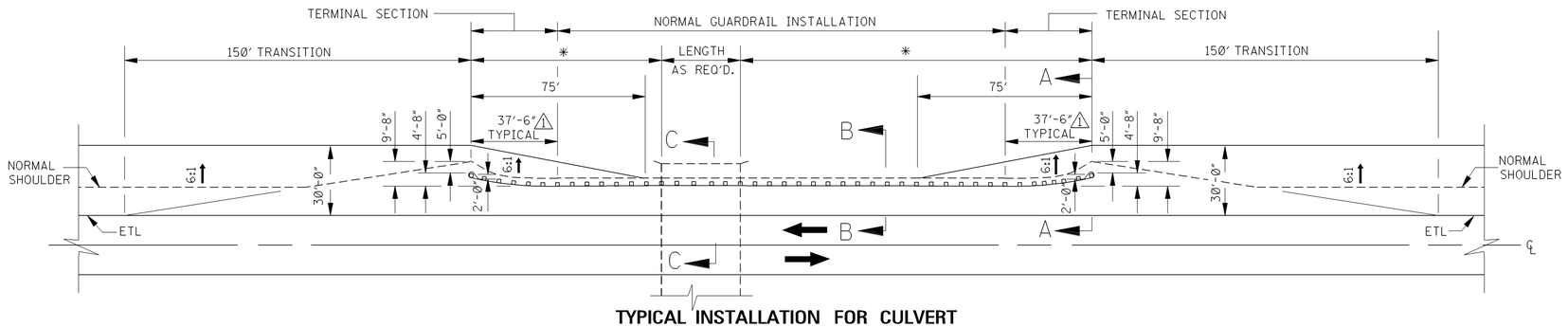

TYPICAL INSTALLATION FOR CULVERT

*NOTE: DISTANCE REQUIRED SHOWN ELSEWHERE ON PLANS.

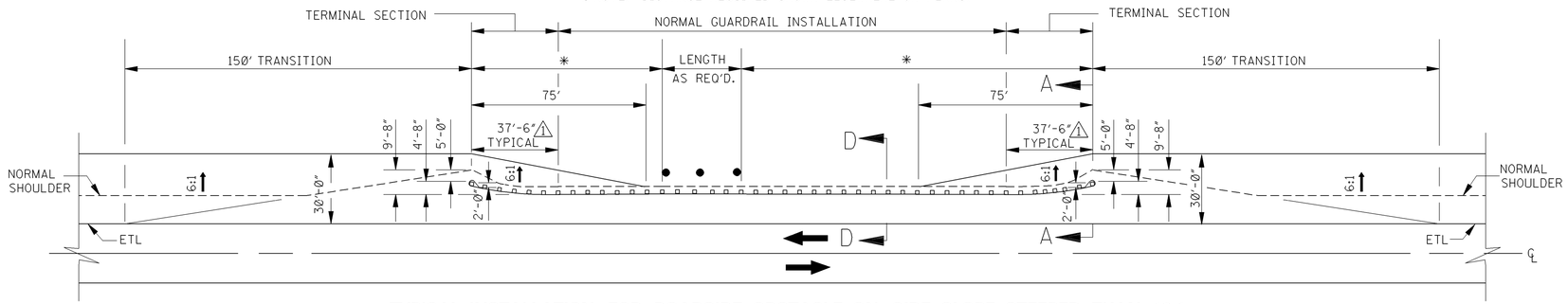

TYPICAL INSTALLATION FOR ROADSIDE OBSTACLE ON SIDE SLOPE STEEPER THAN 10:1

*NOTE: DISTANCE REQUIRED SHOWN ELSEWHERE ON PLANS.

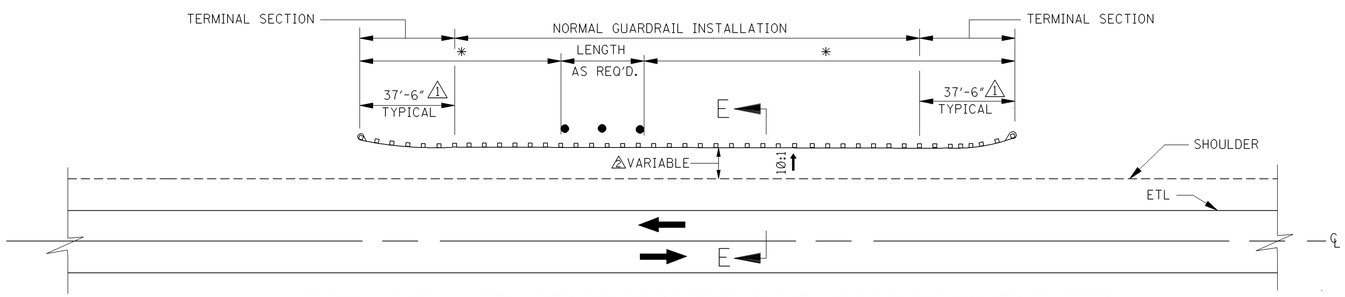

TYPICAL INSTALLATION FOR ROADSIDE OBSTACLE ON SIDE SLOPE 10:1 OR FLATTER

*NOTE: DISTANCE REQUIRED SHOWN ELSEWHERE ON PLANS.

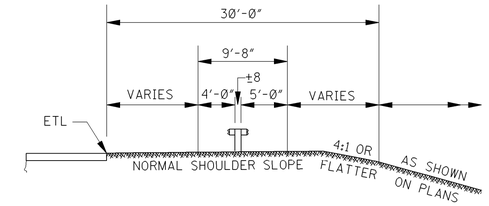

SECTION A–A

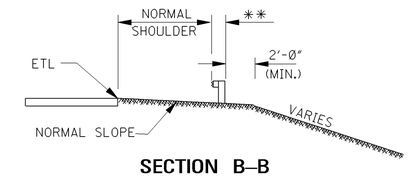

SECTION B–B

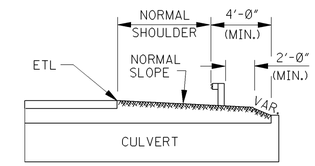

SECTION C–C

**NOTE: FOR STEEL POST AND MODIFIED WOOD BLOCKOUT, 17.15". FOR WOOD POST AND WOOD BLOCKOUT, 19.25".

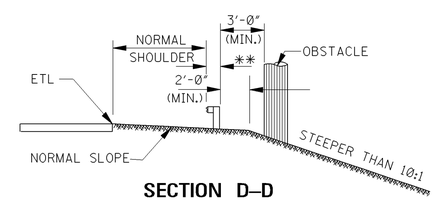

SECTION D–D

2 FOR OBSTACLES 5' TO 17' FROM NORMAL SHOULDER

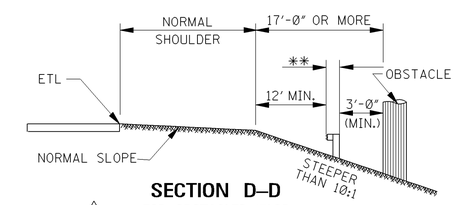

SECTION D–D

2 FOR OBSTACLES 17' OR MORE FROM NORMAL SHOULDER

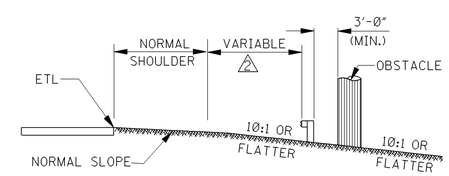

SECTION E–E

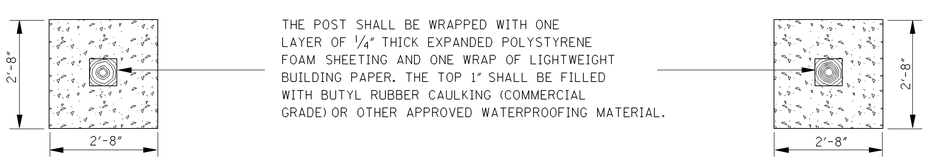

THE POST SHALL BE WRAPPED WITH ONE LAYER OF 1/4" THICK EXPANDED POLYSTYRENE FOAM SHEETING AND ONE WRAP OF LIGHTWEIGHT BUILDING PAPER. THE TOP 1" SHALL BE FILLED WITH BUTYL RUBBER CAULKING (COMMERCIAL GRADE) OR OTHER APPROVED WATERPROOFING MATERIAL.

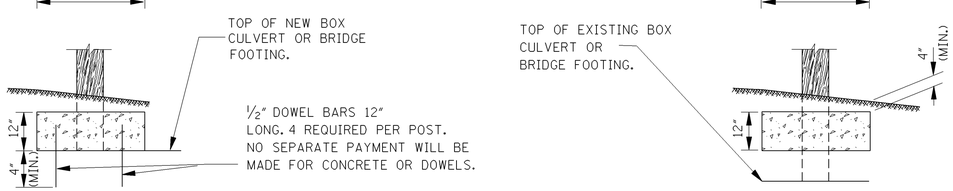

1/2" DOWEL BARS 12" LONG. 4 REQUIRED PER POST. NO SEPARATE PAYMENT WILL BE MADE FOR CONCRETE OR DOWELS.

DETAIL OF POST INSTALLATION WITH COVER LESS THAN NORMAL POST LENGTH

GENERAL NOTES:

1. FOR DETAILS PERTINENT TO INSTALLATION OF THE TERMINAL SECTION, SEE MANUFACTURER'S SPECIFICATIONS AND DRAWINGS OR ELSEWHERE ON PLANS
2. GUARDRAIL SECTIONS TO BE LAPPED IN THE DIRECTION OF TRAFFIC FLOW NEAREST THE GUARDRAIL FACE.
3. PAY LIMITS FOR NORMAL GUARDRAIL INSTALLATION WILL BE THE TOTAL LENGTH LESS THE LENGTHS OF END TERMINALS.

DATE	REVISION	BY
3-01-02	REVISED DETAIL	S.W.R.
12-1-99	REVISED NOTE	S.W.R.

MISSISSIPPI DEPARTMENT OF TRANSPORTATION
ROADWAY DESIGN DIVISION
STANDARD PLAN

GUARDRAIL: TYPICAL INSTALLATION FOR ROADSIDE HAZARDS ON 2-LANE, 2-WAY HIGHWAYS

ENGLISH

WORKING NUMBER GR-4D

ISSUE DATE: OCTOBER 1, 1998

SHEET NUMBER 198

STATE	PROJECT NO.
MISS.	

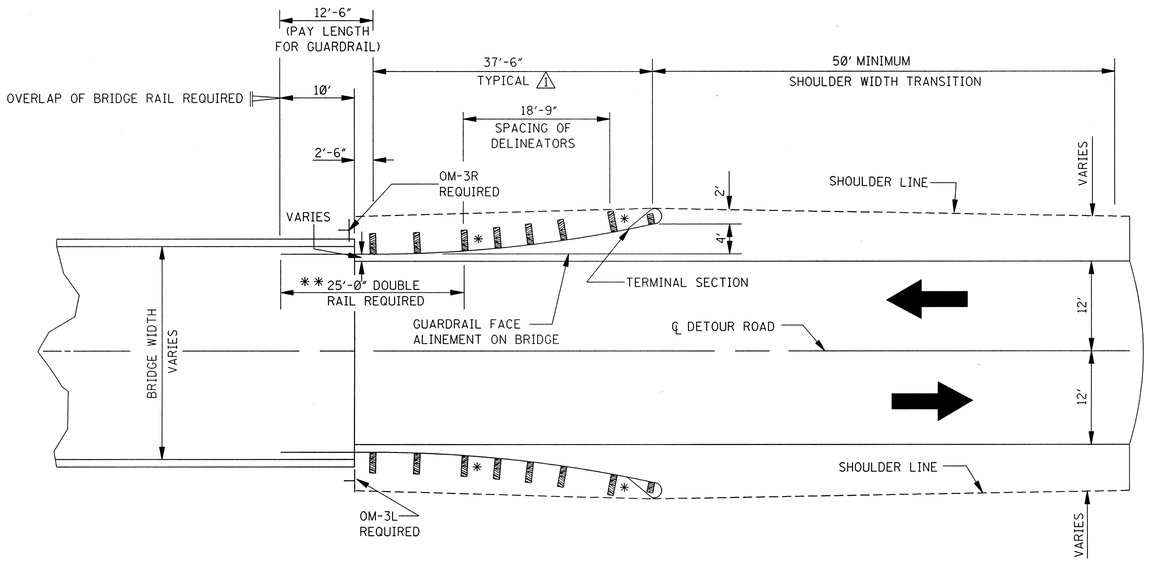

PLAN

(TEMPORARY GUARDRAIL)

NOTE: TYPICAL FOR EACH END OF BRIDGE.

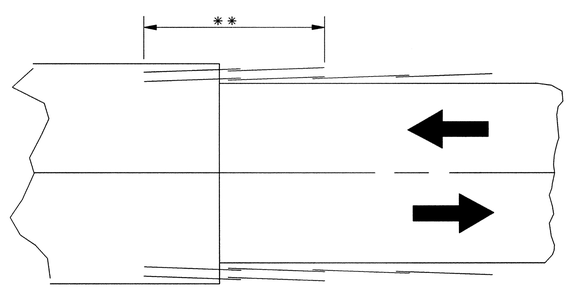

DETAIL SHOWING GUARDRAIL SECTION LAPS AND OVERLAPS

LEGEND

* SINGLE WHITE DELINEATOR REQUIRED (2 REQUIRED PER INSTALLATION)

** TWO SECTIONS OF GUARDRAIL ONE SET INSIDE THE OTHER.
(NO EXTRA PAY FOR DOUBLE RAIL)

INDICATES DIRECTION OF TRAFFIC

GENERAL NOTES:

1. GUARDRAIL TO BE INSTALLED PRIOR TO PLACEMENT OF TRAFFIC ON DETOUR ROAD.
2. FOR OTHER DETAILS OF GUARDRAIL INSTALLATION, SEE THE APPROPRIATE STANDARD DRAWINGS.
3. OVERLAP GUARDRAIL 10' OVER BRIDGE RAIL. (NOT A SEPARATE PAY ITEM).
4. BOLT GUARDRAIL TO BRIDGE RAIL AS PER STANDARD PLAN (NOT A SEPARATE PAY ITEM).
5. POST SPACING TO BE 6'-3" UNLESS OTHERWISE NOTED OR AS DIRECTED BY THE ENGINEER.
6. 1 FOR DETAILS PERTINENT TO INSTALLATION OF THE TERMINAL SECTION, SEE MANUFACTURER'S SPECIFICATIONS AND DRAWINGS OR ELSEWHERE ON PLANS

DATE	REVISION	BY
12-1-99	REVISED NOTE	S.W.R.

MISSISSIPPI DEPARTMENT OF TRANSPORTATION
ROADWAY DESIGN DIVISION
STANDARD PLAN

GUARDRAIL (TEMPORARY): TYPICAL INSTALLATION AT DETOUR BRIDGE ENDS

ENGLISH

WORKING NUMBER
TGR-1

ISSUE DATE: OCTOBER 1, 1998

SHEET NUMBER
199

STATE	PROJECT NO.
MISS.	

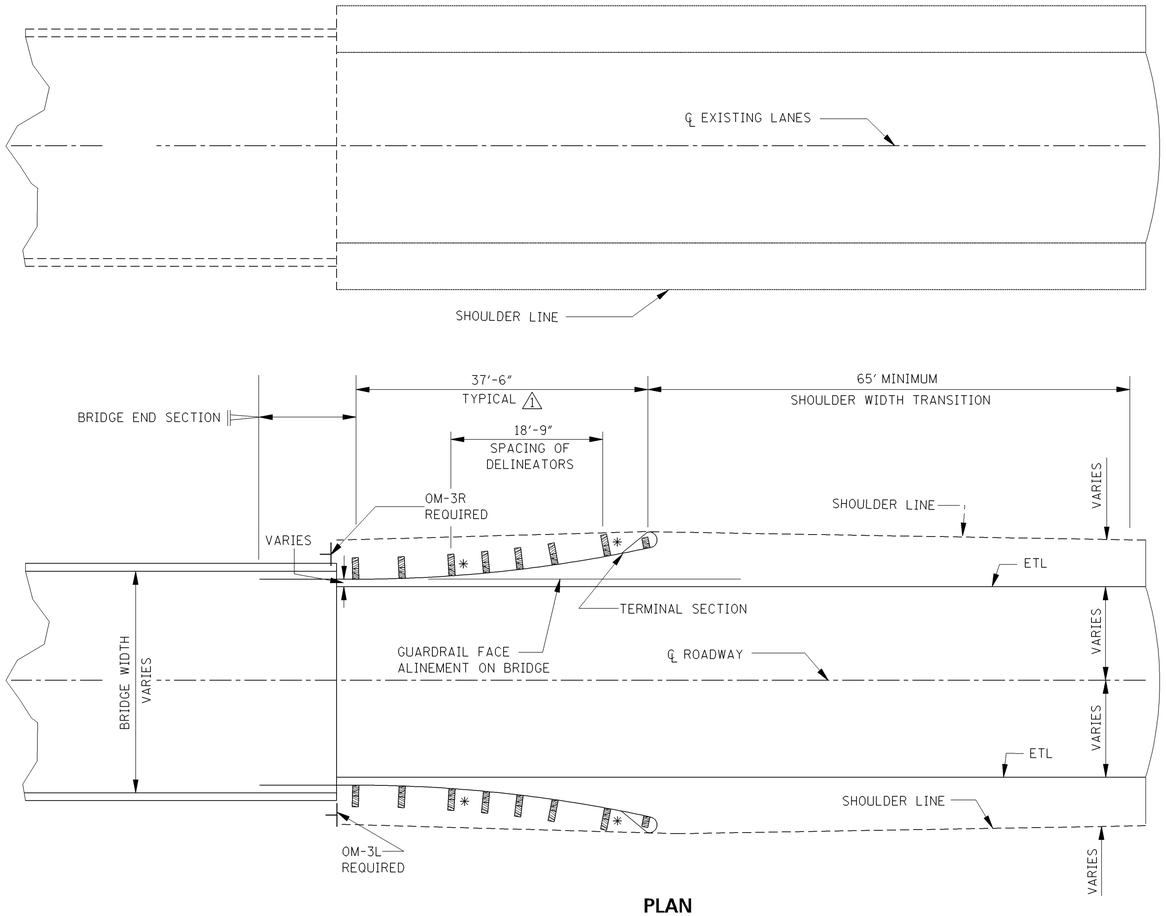

PLAN
(TEMPORARY GUARDRAIL)
NOTE: TYPICAL FOR EACH END OF BRIDGE.

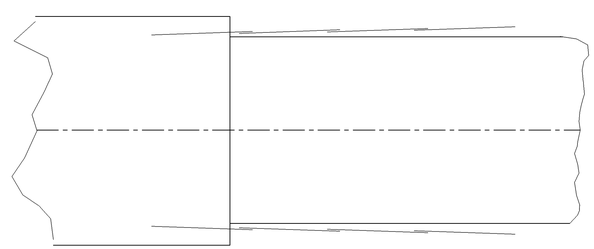

DETAIL SHOWING GUARDRAIL SECTION LAPS AND OVERLAPS

TRAFFIC PHASE

PHASE 1	PHASE 2	PHASE 3
←		←
→		←
	←	→
	→	→

LEGEND

✳ SINGLE WHITE DELINEATOR REQUIRED (2 REQUIRED PER INSTALLATION)

← INDICATES DIRECTION OF TRAFFIC

GENERAL NOTES:

1. GUARDRAIL TO BE INSTALLED PRIOR TO PHASE 2.
2. TEMPORARY GUARDRAIL TO BE REMOVED DURING PHASE 3.
3. PAYMENT FOR INSTALLATION AND REMOVAL WILL BE MADE UNDER:
   A. INSTALLATION AND REMOVAL OF GUARDRAIL TYPE _____ BRIDGE END SECTION.
   ⚠2 B. INSTALLATION AND REMOVAL OF GUARDRAIL (TERMINAL END SECTION.)
4. REMOVAL OF GUARDRAIL SHALL INCLUDE FILLING OF POST HOLES AND RESTORING ROADWAY TO NORMAL SECTION (NOT A SEPARATE PAY ITEM).
5. FOR OTHER DETAILS OF GUARDRAIL INSTALLATION, SEE THE APPROPRIATE STANDARD DRAWINGS.
6. FOR DETAILS PERTINENT TO INSTALLATION OF THE TERMINAL SECTION, SEE MANUFACTURER'S SPECIFICATIONS AND DRAWINGS OR ELSEWHERE ON PLANS ⚠1

DATE	REVISION	BY
5-01-02	REVISED NOTE	S.W.R.
12-1-99	REVISED NOTE	S.W.R.

MISSISSIPPI DEPARTMENT OF TRANSPORTATION
ROADWAY DESIGN DIVISION
STANDARD PLAN

GUARDRAIL (TEMPORARY): TYPICAL INSTALLATION AT BRIDGE END DURING CONSTRUCTION PHASES

ENGLISH

WORKING NUMBER
TGR-2

ISSUE DATE: OCTOBER 1, 1998

SHEET NUMBER
200

STATE	PROJECT NO.
MISS.	

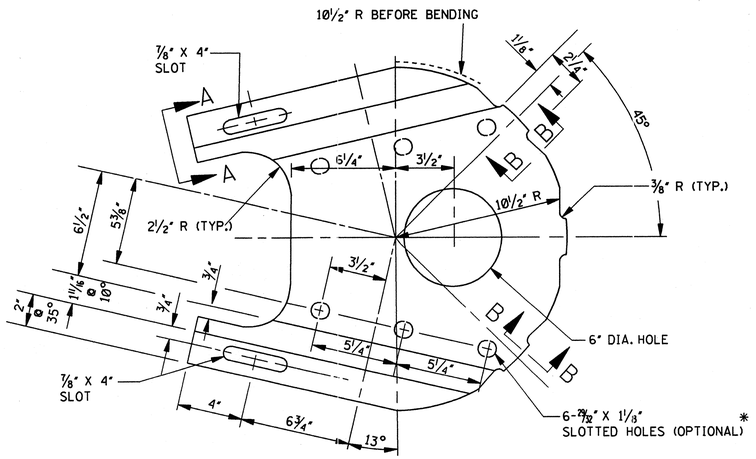

PLAN

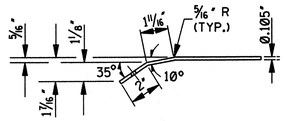

SECTION A–A

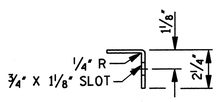

SECTION B–B

DIAPHRAGM PLATE DETAILS

NOTES:
1. TWO (2) DIAPHRAGM PLATES REQUIRED FOR EACH TERMINAL.
* 2. OPTIONAL HOLES ARE FOR THE INSERTION OF NOSE EXPANSION BLOCK, WHERE REQUIRED.

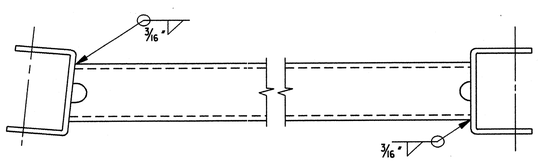

STRUT AND YOKE ASSEMBLY

NOTE: SHOWN, LEGS DOWN, FOR OPPOSITE HAND, INSTALL ALL LEGS UP.

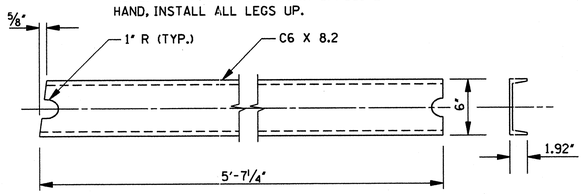

STRUT DETAILS

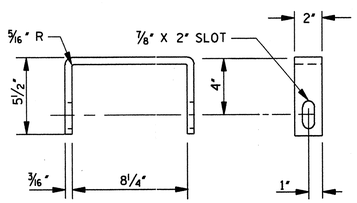

YOKE DETAILS

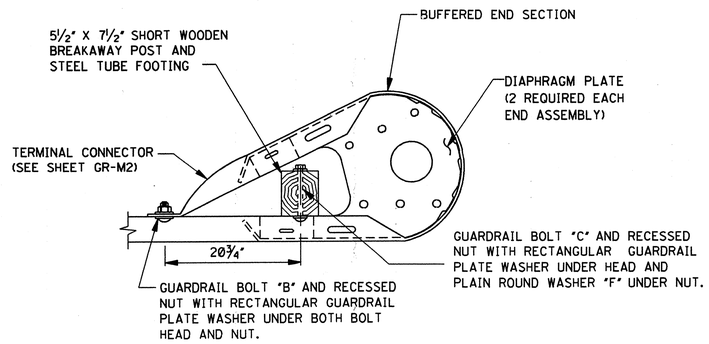

BUFFERED END SECTION ASSEMBLY

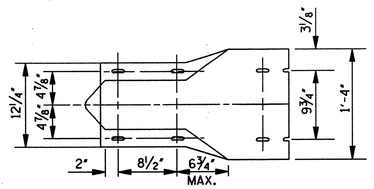

ELEVATION

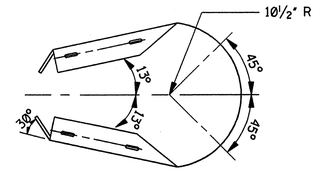

PLAN

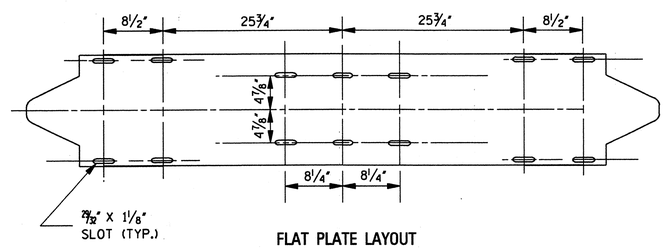

FLAT PLATE LAYOUT

BUFFERED END SECTION DETAILS

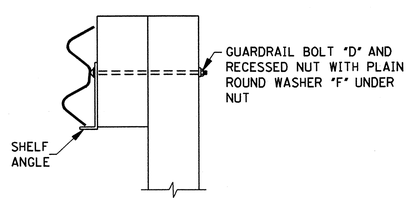

DETAILS OF SHELF ANGLE BRACKET ATTACHMENT

NOTE: RAIL RESTS ON THE SHELF ANGLE BRACKET. GUARDRAIL BOLT "D" CONNECTS THE SHELF ANGLE BRACKET, BLOCKOUT AND POST BUT NOT THE GUARDRAIL.

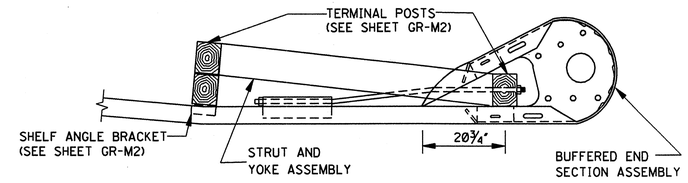

PLAN

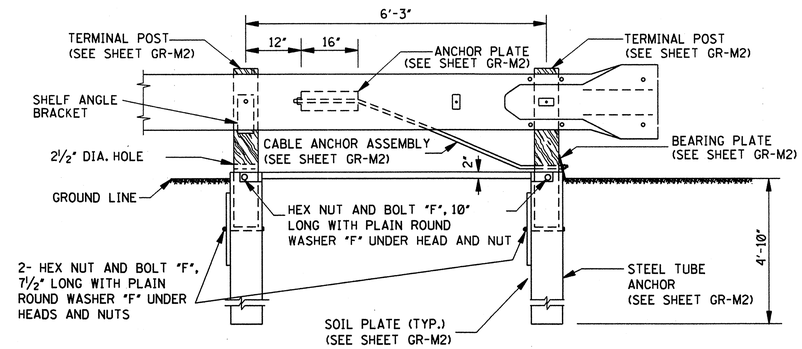

ELEVATION

ANCHORAGE ASSEMBLY

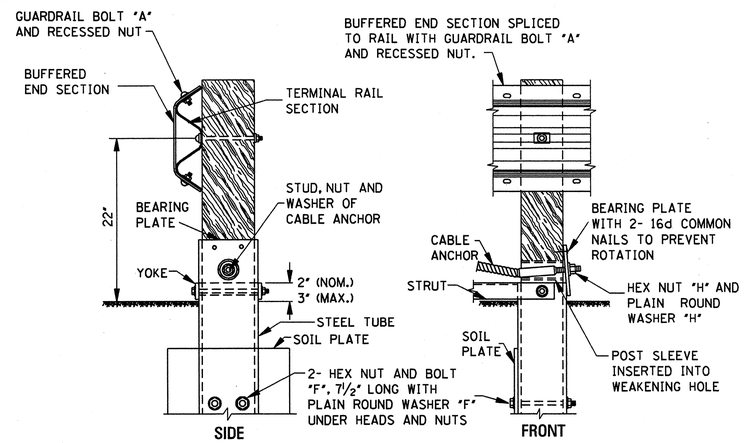

LEAD POST ASSEMBLY

REVISION	BY	DATE

MISSISSIPPI DEPARTMENT OF TRANSPORTATION
ROADWAY DESIGN DIVISION
STANDARD PLAN

GUARDRAIL: MODIFIED ECCENTRIC LOADER TERMINAL ("MELT") ANCHORAGE ASSEMBLY

ENGLISH

WORKING NUMBER GR-M1

ISSUE DATE: OCTOBER 1, 1998

SHEET NUMBER 201

STATE	PROJECT NO.
MISS.	

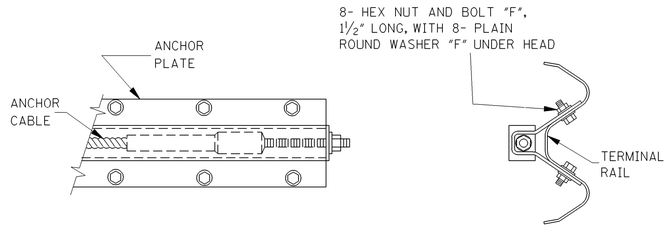

ANCHOR PLATE ASSEMBLY DETAILS

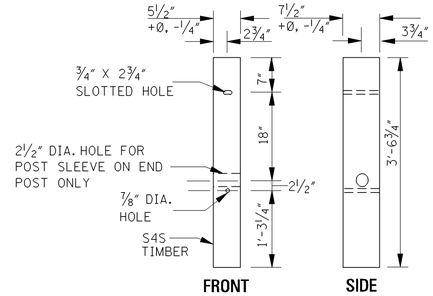

TERMINAL POST

NOTE: TERMINAL POST SHALL BE MADE OF S4S TIMBER WITH STRESS GRADE OF 1200 lbs/in².

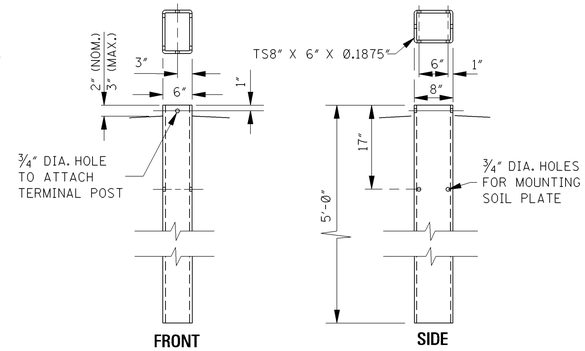

STEEL TUBE ANCHOR

NOTE: TERMINAL POST SHOULD BE ABLE TO SLIDE INTO THE TOP OF THIS SECTION SO THE ACTUAL INSIDE DIMENSIONS OF THIS GALVANIZED TUBE CANNOT BE LESS THAN 7½" X 5½".

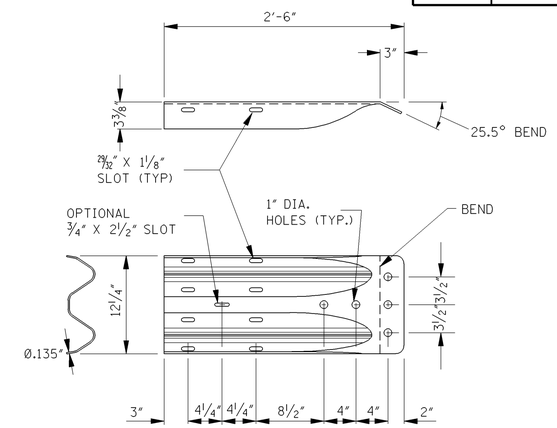

"W" BEAM TERMINAL CONNECTOR PLATE

NOTES:

1. THE "W" BEAM TERMINAL CONNECTOR IS TO BE AASHTO M 180 CORRUGATED SHEET STEEL, CLASS B, TYPE 1.
2. SPLICE-BOLT SLOTS MAY ALSO BE ORIENTED AT 50° (ON THE FLAT) INSTEAD OF 0° AS SHOWN.

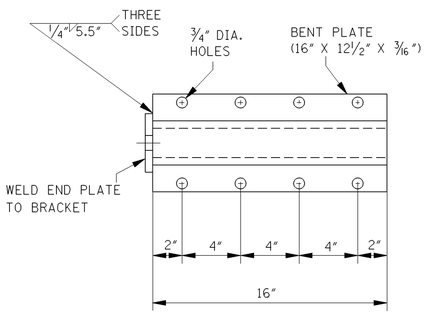

ANCHOR PLATE

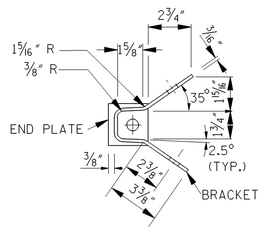

BRACKET

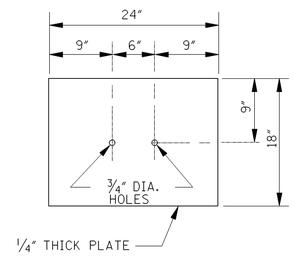

SOIL PLATE

NOTE: 2 REQUIRED

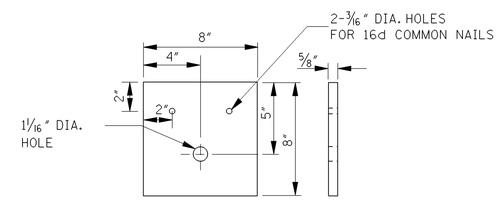

BEARING PLATE

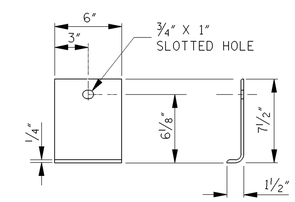

SHELF ANGLE BRACKET

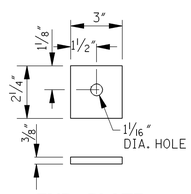

END PLATE

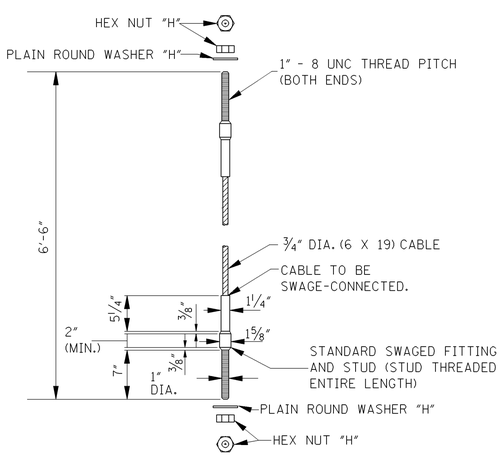

CABLE ANCHOR ASSEMBLY

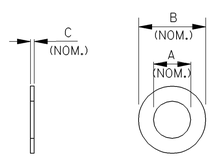

PLAIN ROUND WASHER

PLAIN ROUND WASHERS			
WASHER	A (NOM.)	B (NOM.)	C (NOM.)
"F"	11/16"	1¾"	9/64"
"H"	1 1/16"	2"	9/64"

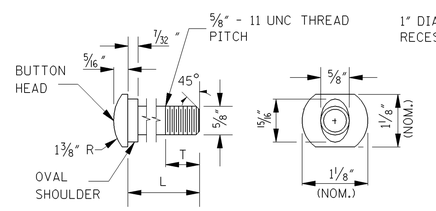

GUARDRAIL BOLT

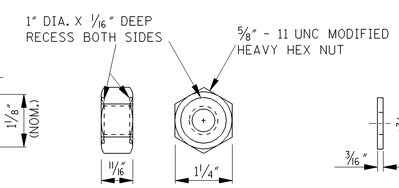

RECESSED NUT

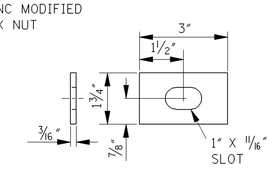

RECTANGULAR GUARDRAIL PLATE WASHER

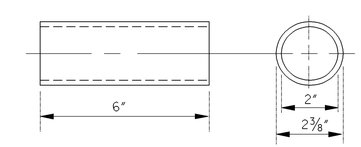

BREAKAWAY TERMINAL POST SLEEVE

GUARDRAIL BOLTS		
BOLT	L	T (MIN.)
"A"	1¼"	1"
"B"	2"	1¾"
"C"	10"	4"
"D"	18"	4"

NOTES:

1. ALL GUARDRAIL BOLTS ARE ⅝" - 11 UNC THREAD PITCH.
2. IF ANY BOLT EXTENDS MORE THAN ¼" FROM THE NUT, THE BOLT SHOULD BE TRIMMED BACK.

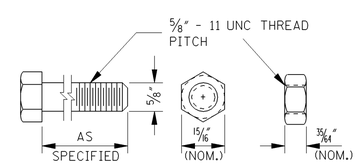

HEX NUT AND BOLT "F"

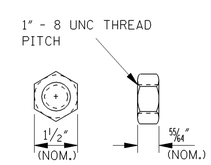

HEX NUT "H"

FASTENER DETAILS

DATE	REVISION	BY
3-01-02	REVISE SHEET TITLE	S.W.R.

MISSISSIPPI DEPARTMENT OF TRANSPORTATION
ROADWAY DESIGN DIVISION
STANDARD PLAN

⚠ GUARDRAIL: MISCELLANEOUS HARDWARE

ENGLISH

WORKING NUMBER GR-HW

ISSUE DATE: OCTOBER 1, 1998

SHEET NUMBER 202

STATE	PROJECT NO.
MISS.	

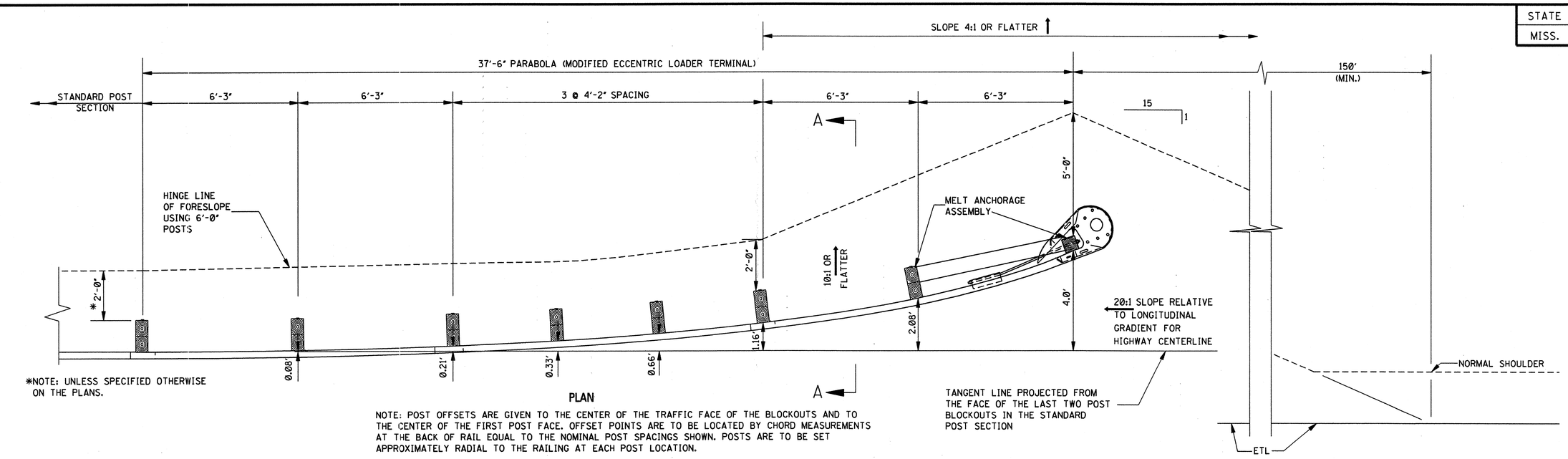

*NOTE: UNLESS SPECIFIED OTHERWISE ON THE PLANS.

PLAN

NOTE: POST OFFSETS ARE GIVEN TO THE CENTER OF THE TRAFFIC FACE OF THE BLOCKOUTS AND TO THE CENTER OF THE FIRST POST FACE. OFFSET POINTS ARE TO BE LOCATED BY CHORD MEASUREMENTS AT THE BACK OF RAIL EQUAL TO THE NOMINAL POST SPACINGS SHOWN. POSTS ARE TO BE SET APPROXIMATELY RADIAL TO THE RAILING AT EACH POST LOCATION.

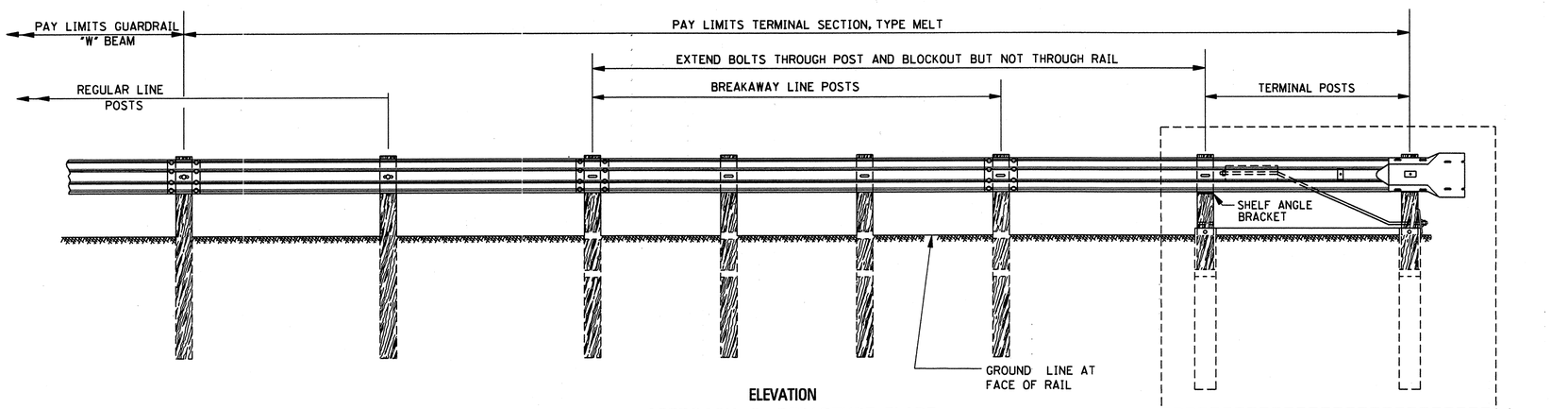

ELEVATION

APPROACH & DEPARTURE FLARE WITH MODIFIED ECCENTRIC LOADER TERMINAL (MELT)

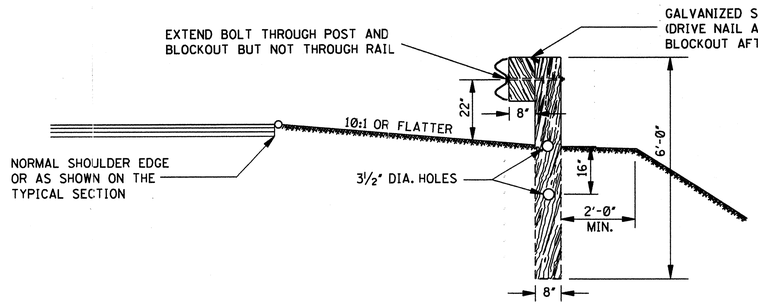

SECTION A–A

BREAKAWAY LINE POST AND BLOCKOUT

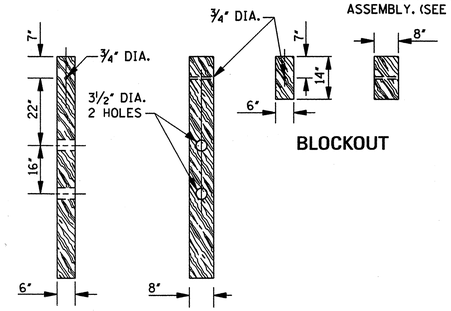

BLOCKOUT

BREAKAWAY LINE POST

GENERAL NOTES:

1. GUARDRAIL SHALL MEET THE REQUIREMENTS OF AASHTO M 180, CLASS A, TYPE 1 UNLESS OTHERWISE DESIGNATED.
2. GUARDRAIL SECTIONS SHALL BE LAPPED IN THE DIRECTION OF TRAFFIC FLOW FOR THE LANE NEAREST THE GUARDRAIL.
3. ALL ANGLES, CHANNELS AND PLATES SHALL CONFORM TO THE REQUIREMENTS OF ASTM A 500 OR ASTM A 513 GRADE 1008. DIAPHRAGM PLATE SHALL CONFORM TO ASTM A 36 OR AASHTO M 180. WELDING SHALL MEET THE CURRENT REQUIREMENTS OF THE AMERICAN WELDING SOCIETY STRUCTURAL WELDING CODE ANSI/AASHTO/AWS D15. ALL STRUCTURAL STEEL SHALL BE GALVANIZED IN ACCORDANCE WITH ASTM A 123. NO PUNCHING, DRILLING OR CUTTING WILL BE PERMITTED AFTER GALVANIZING EXCEPT FOR HOLES TO MOUNT GUARDRAIL DELINEATORS.
4. ALL WOOD POSTS AND BLOCKOUTS SHALL BE TREATED TIMBER IN ACCORDANCE WITH MISSISSIPPI DEPARTMENT OF TRANSPORTATION STANDARD SPECIFICATIONS.
5. FOR HARDWARE COMPONENT AND ASSEMBLY DETAILS SPECIFIC TO THE MELT TERMINAL SECTION, SEE SHEETS GR-M1 AND GR-M2.
6. FOR OTHER DETAILS OF POSTS, POST ACCESSORIES, FASTENERS & RAIL ELEMENTS, SEE AASHTO-AGC-ARTBA JOINT TASK FORCE NO. 13, TITLED "A GUIDE TO STANDARDIZED HIGHWAY BARRIER HARDWARE," LATEST EDITION.

DATE	REVISION	BY

MISSISSIPPI DEPARTMENT OF TRANSPORTATION
ROADWAY DESIGN DIVISION
STANDARD PLAN

GUARDRAIL: MODIFIED ECCENTRIC LOADER TERMINAL ("MELT")

ENGLISH

WORKING NUMBER GR-M3

ISSUE DATE: OCTOBER 1, 1998

SHEET NUMBER 203

STATE	PROJECT NO.
MISS.	

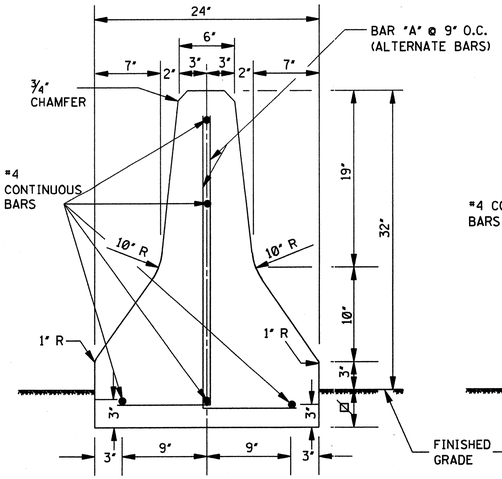

TYPE 1

NOTE: ⊠ DESIGNATES 4" MIN. OR AS SHOWN ELSEWHERE ON PLANS.

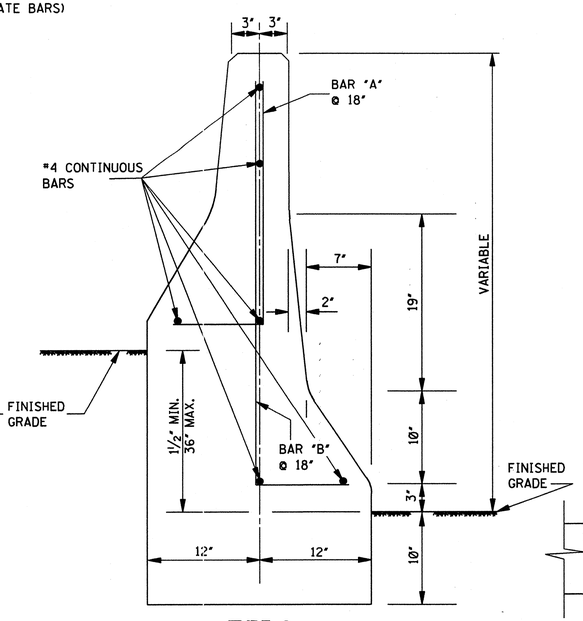

TYPE 2

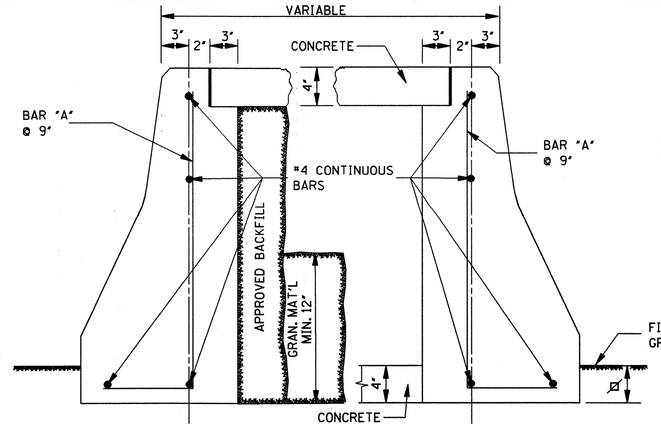

TYPE 3

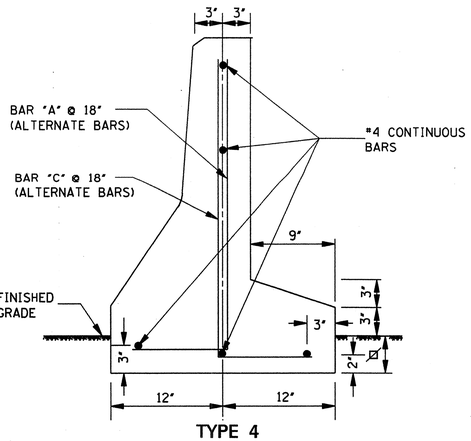

TYPE 4

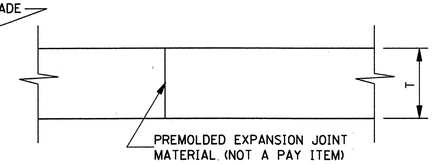

TYPICAL VERTICAL EXPANSION JOINT

NOTE: T = THICKNESS OF WALL AT TOP. EXPANSION JOINT TO BE PLACED IN BASE AND BARRIER.

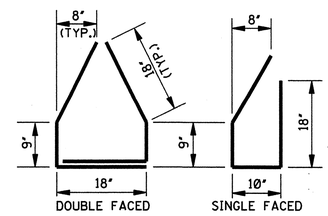

BAR "G" DETAIL

NOTE: #5 BARS SPACED @ 12" O.C.

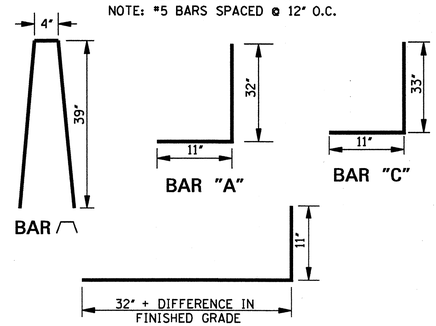

BAR "B"

NOTE: BARS "A", "B" & "C" ARE #4 BARS SPACED AT 9" O.C.

GENERAL NOTES:

1. CONCRETE SHALL BE CLASS "B".
2. REINFORCING STEEL SHALL EXTEND THROUGH CONSTRUCTION JOINTS.
3. DIMENSIONS ON THIS DRAWING ARE NOT DUPLICATED WHERE ALREADY SHOWN.
4. TYPE 3 BARRIER:
   A. MATERIALS REQUIRED FOR SUPPORT BETWEEN BARRIER WALLS SHALL BE SPECIFIED ON THE PLANS OR AS DIRECTED. THESE MATERIALS MAY BE:
      (1) 4" CLASS "C" CONCRETE AT THE BASE BETWEEN WALLS.
      (2) 12" GRANULAR MATERIAL AT THE BASE BETWEEN WALLS.
      (3) APPROVED BACKFILL FROM BASE TO BOTTOM OF CAP.
   B. REINFORCEMENT AND DETAILS OF 4" CONCRETE CAP SHALL BE SHOWN ON PLANS OR AS DIRECTED.
   C. PROVISIONS FOR DRAINAGE SHALL BE SHOWN ON THE PLANS OR AS DIRECTED.
   D. HEIGHT OF BARRIER ON THE LOW SIDE OF OFFSET OR SUPERELEVATED ROADWAYS SHOULD BE ADJUSTED TO PROVIDE LEVEL GRADE ACROSS THE TOP.
5. JOINTS:
   A. CONTRACTION JOINTS REQUIRED AT 20'-0" O.C.
      1. 3/4" CHAMFER REQUIRED FROM THE BASE TO TOP OF WALL. CHAMFER MAY BE FORMED OR SCORED.
      2. LONGITUDINAL REINFORCEMENT SHALL CONTINUE AT CONTRACTION JOINTS.
   B. EXPANSION JOINTS REQUIRED AT 60'-0" O.C.
      1. 3/4" CHAMFER REQUIRED FROM THE BASE TO TOP OF WALL. CHAMFER MAY BE FORMED OR SCORED.
      2. 1" X 24" SMOOTH DOWELS SPACED WITH EACH HORIZONTAL BAR IN WALL. PROVIDE 1" X 14" PAPER TUBING ON EACH DOWEL, ON ONE SIDE ONLY.
      3. WHERE A CONCRETE BASE OR FOOTING IS REQUIRED WITH BARRIER, THE EXPANSION JOINTS WILL BE REQUIRED FROM THE TOP OF WALL TO THE BOTTOM OF THE BASE OR FOOTING.
6. IN LIEU OF THE REINFORCEMENT SHOWN ON THESE PLANS THE CONTRACTOR MAY SUBMIT DIFFERENT REINFORCING DETAILS FOR REVIEW, HOWEVER, PRIOR APPROVAL MUST BE OBTAINED FROM THE DEPARTMENT.

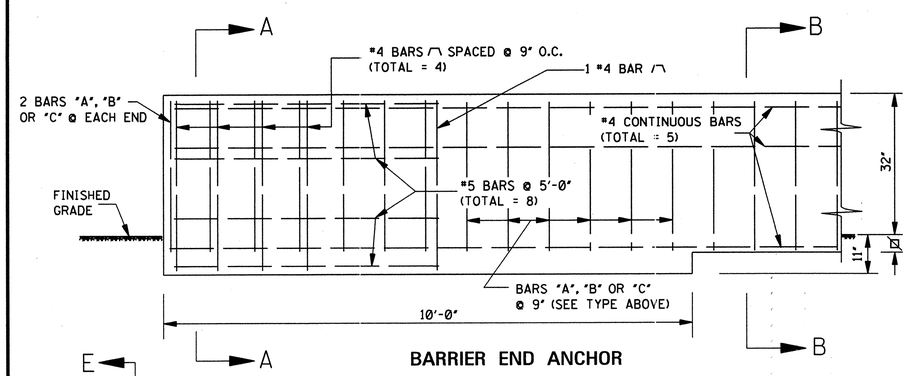

BARRIER END ANCHOR

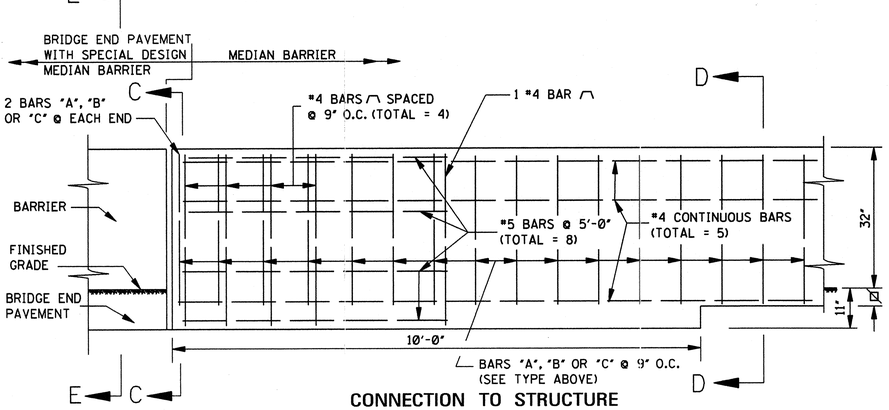

CONNECTION TO STRUCTURE

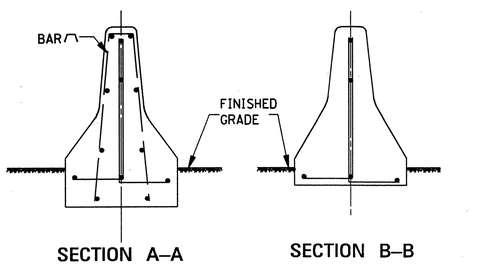

SECTION A–A

SECTION B–B

NOTE: DOUBLE FACE BARRIER SHOWN. SINGLE FACE BARRIER SIMILAR. #4 BARS HAVE 1" CLEARANCE FROM FACE OF BARRIER.

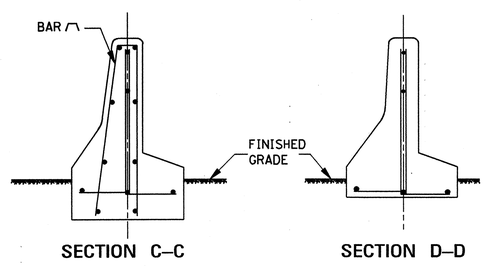

SECTION C–C

SECTION D–D

NOTE: SINGLE FACE BARRIER SHOWN. DOUBLE FACE BARRIER SIMILAR. #4 BARS HAVE 1" CLEARANCE FROM FACE OF BARRIER.

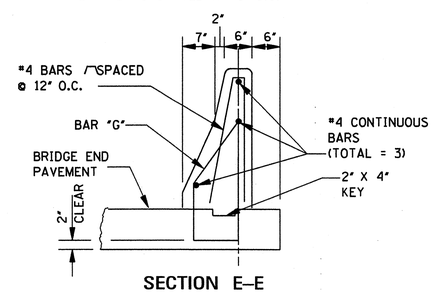

SECTION E–E

DATE	REVISION	BY

MISSISSIPPI DEPARTMENT OF TRANSPORTATION
ROADWAY DESIGN DIVISION
STANDARD PLAN

MEDIAN BARRIER: CONCRETE
(CAST IN PLACE)

ENGLISH

WORKING NUMBER MB-2

ISSUE DATE: OCTOBER 1, 1998

SHEET NUMBER 204

STATE	PROJECT NO.
MISS.	

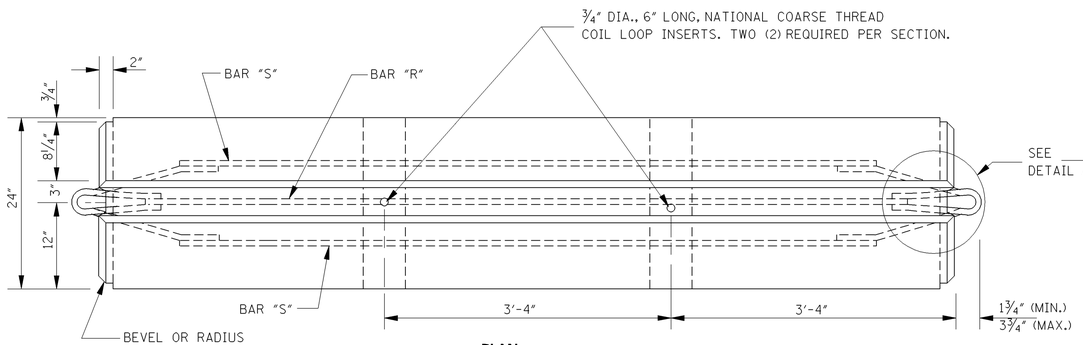

PLAN

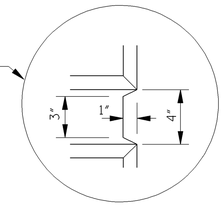

DETAIL A

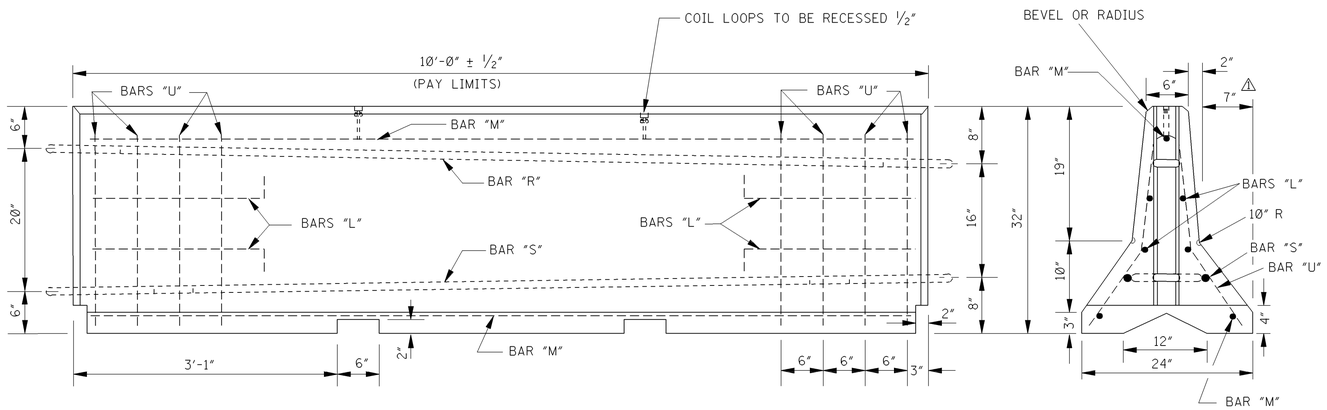

ELEVATION

END

PRECAST CONCRETE MEDIAN BARRIER

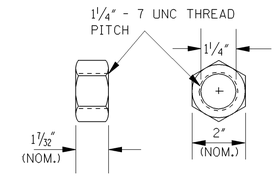

HIGH-STRENGTH
STRUCTURAL HEX NUT "F"

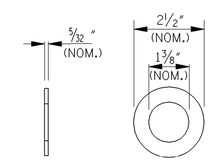

HARDENED ROUND
WASHER "H"

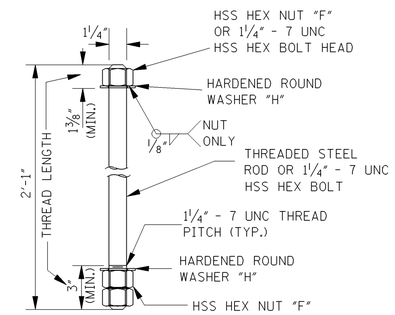

ANCHOR STUD CONNECTOR DETAILS

NOTE: ALTERNATE METHODS OF CONNECTING PRECAST BARRIERS, SUCH AS J-HOOKS, MAY BE SUBSTITUTED IF APPROVED BY THE ENGINEER.

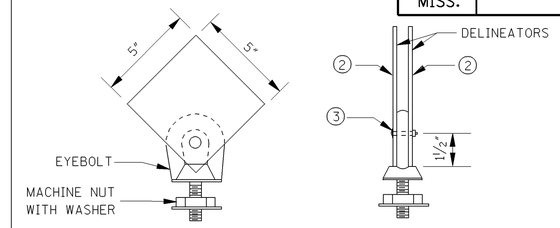

DELINEATOR, CONCRETE
PRECAST MEDIAN BARRIER, TYPE 1

1. DELINEATORS SHALL BE REQUIRED UNLESS INDICATED OTHERWISE ON THE PLANS. THIS ITEM WILL NOT BE MEASURED SEPARATELY, BUT WILL BE INCLUDED UNDER PAYMENT FOR PRECAST CONCRETE BARRIER.
2. DELINEATORS SHALL BE ENCAPSULATED LENS REFLECTIVE SHEETING ON ALUMINUM SHEET, 0.080" THICK, OR SHEET STEEL, 14 GAGE, WHICH IS GALVANIZED.
3. ALUMINUM OR STAINLESS STEEL SLOTTED ROUND HEAD MACHINE SCREW, NO. 10, 1½" LONG, 2-WASHERS AND 1-HEX HEAD NUT (COMMERCIAL QUALITY)
4. THE DELINEATORS SHALL BE INSTALLED FACING TRAFFIC WITH YELLOW ON THE LEFT AND WHITE ON THE RIGHT, UNLESS OTHERWISE SPECIFIED.
5. SPACINGS OF DELINEATORS:
   TANGENT SECTION - 20'-0".
   CURVED SECTION - 10'-0".
6. OPTIONAL DELINEATORS, WHICH ARE ON THE MISSISSIPPI DEPARTMENT OF TRANSPORTATION "LIST OF APPROVED MATERIALS", WILL BE ACCEPTED.

GENERAL NOTES:

1. LIFTING DEVICES AND ATTACHMENTS TO BARRIER SECTIONS SHALL BE AS APPROVED BY THE ENGINEER.
2. PLACE ALL STEEL REINFORCEMENT 2" MINIMUM FROM OUTSIDE FACE OF WALL, EXCEPT AS OTHERWISE SHOWN.
3. THE ANCHOR STUD CONNECTOR SHALL CONFORM TO AASHTO M 314, GRADE 55. THE HSS HEX NUTS AND THE HARDENED ROUND WASHERS SHALL MEET THE REQUIREMENTS OF ASTM A 325.
4. CONCRETE SHALL BE CLASS "B" (CLASS 1 FINISH). REINFORCING STEEL SHALL MEET THE REQUIREMENTS OF AASHTO M 31.
5. STEEL RODS SHALL MEET THE REQUIREMENTS OF ASTM A 36.
6. CONNECTOR RODS, CONNECTOR PINS, NUTS AND WASHERS SHALL BE GALVANIZED MEETING THE REQUIREMENTS OF AASHTO M 111.

APPROXIMATE QUANTITIES FOR 10' BARRIER			
WEIGHT (lbs.)	REINF. STEEL (lbs.)	STEEL RODS (lbs.)	CONCRETE (yd^3)
3875	104	18	0.931

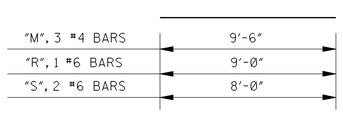

BARS "M", "R" & "S"

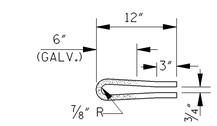

2 ¾"-STEEL RODS, 25" LONG

TOP CONNECTOR

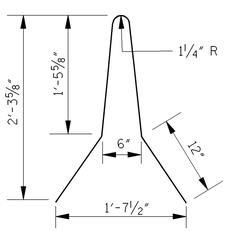

8 #4 BARS, 5'-1" LONG

BARS "U"

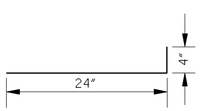

8 #4 BARS, 2'-4" LONG

BARS "L"

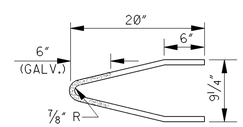

2 ¾"-STEEL RODS, 3'-6" LONG

BOTTOM CONNECTOR

BAR AND ROD DETAILS

NOTE: WHERE STEEL ROD GALVANIZATION IS SHOWN ABOVE, GALVANIZE AFTER BENDING.

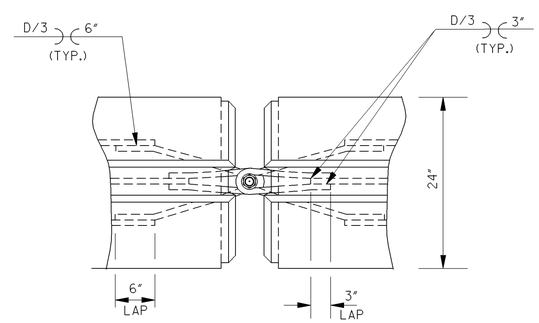

PLAN

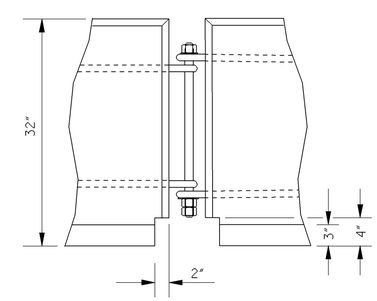

ELEVATION

BARRIER CONNECTION DETAIL

DATE	REVISION	BY
3-01-02	REVISED DIMENSION	S.W.R.

MISSISSIPPI DEPARTMENT OF TRANSPORTATION
ROADWAY DESIGN DIVISION
STANDARD PLAN

MEDIAN BARRIER: CONCRETE
(PRECAST)

ENGLISH

WORKING NUMBER
MB-2A

ISSUE DATE: OCTOBER 1, 1998

SHEET NUMBER
205

STATE	PROJECT NO.
MISS.	

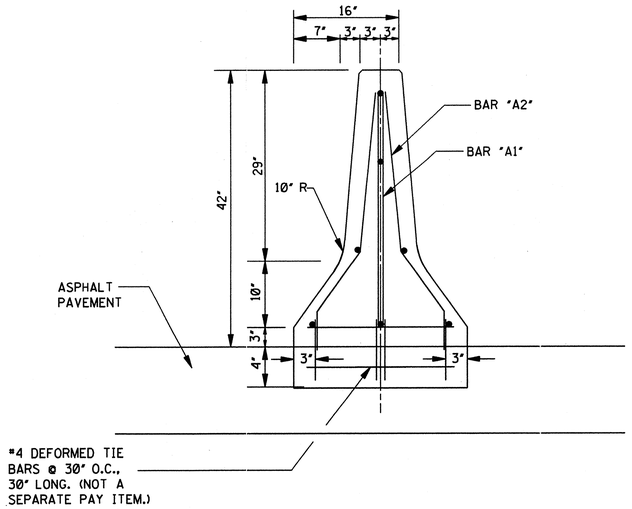

SECTION A–A

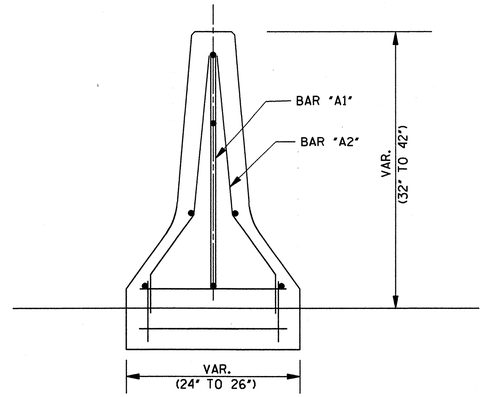

SECTION B–B

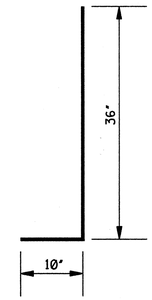

BAR "A1"

NOTE: BARS "A1" ARE #4 BARS SPACED @ 9" O.C.

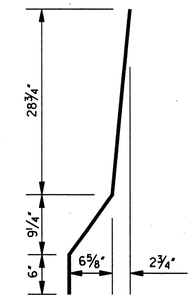

BAR "A2"

NOTE: BARS "A2" ARE #4 BARS SPACED @ 9" O.C.

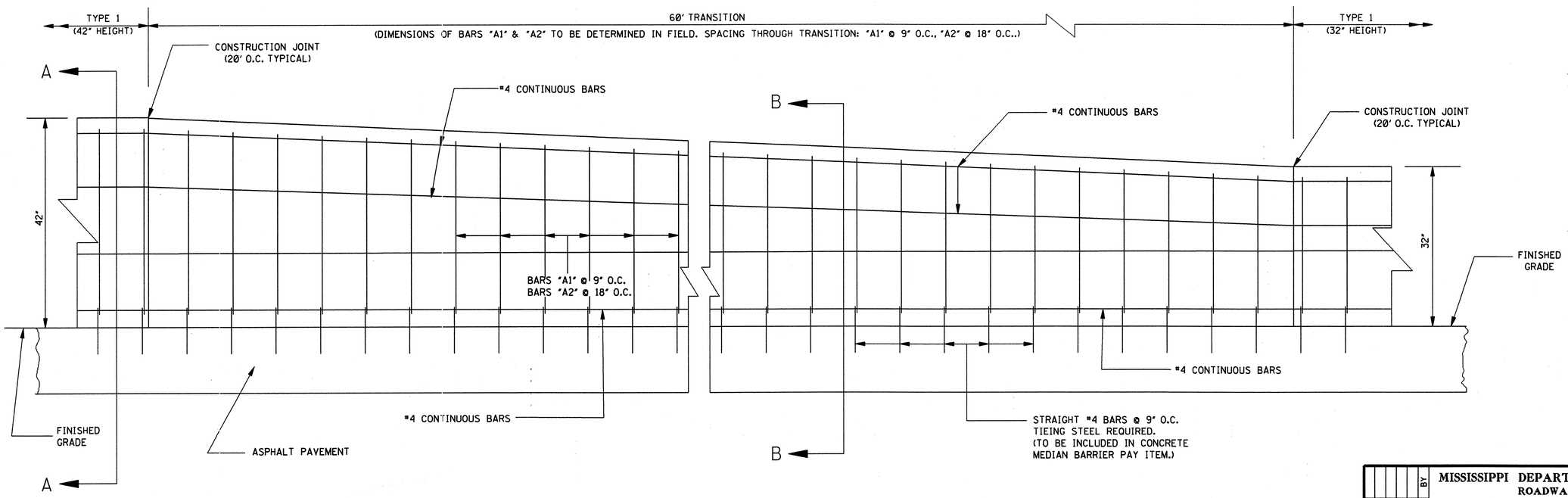

ELEVATION

GENERAL NOTES:

1. TRENCHING OR EXCAVATION TO BE ABSORBED.
2. FOR ADDITIONAL DETAILS, SEE STANDARD DRAWING MB-2.

DATE	REVISION	BY

MISSISSIPPI DEPARTMENT OF TRANSPORTATION
ROADWAY DESIGN DIVISION
STANDARD PLAN

INNOVATIVE MEDIAN BARRIER: CONCRETE
(CAST IN PLACE)
TYPE 1
(42" HEIGHT)

ENGLISH

WORKING NUMBER MB-3

ISSUE DATE: OCTOBER 1, 1998

SHEET NUMBER 206

STATE	PROJECT NO.
MISS.	

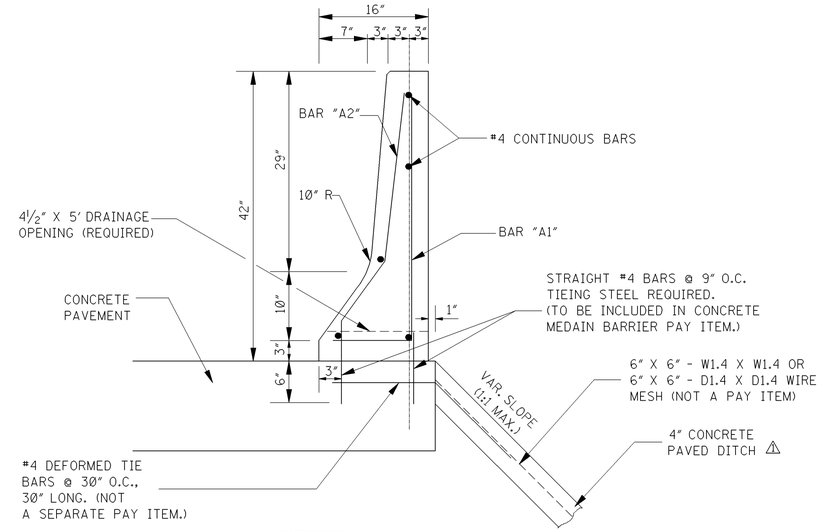

SECTION A–A

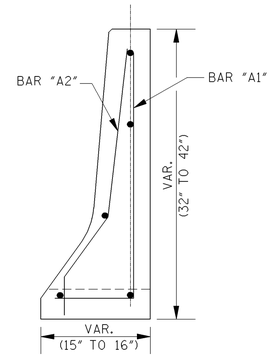

SECTION B–B

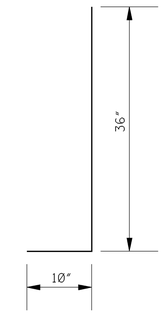

BAR "A1"

NOTE: BARS "A1" ARE #4 BARS SPACED @ 9" O.C.

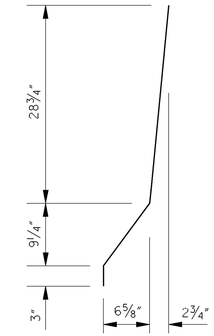

BAR "A2"

NOTE: BARS "A2" ARE #4 BARS SPACED @ 9" O.C.

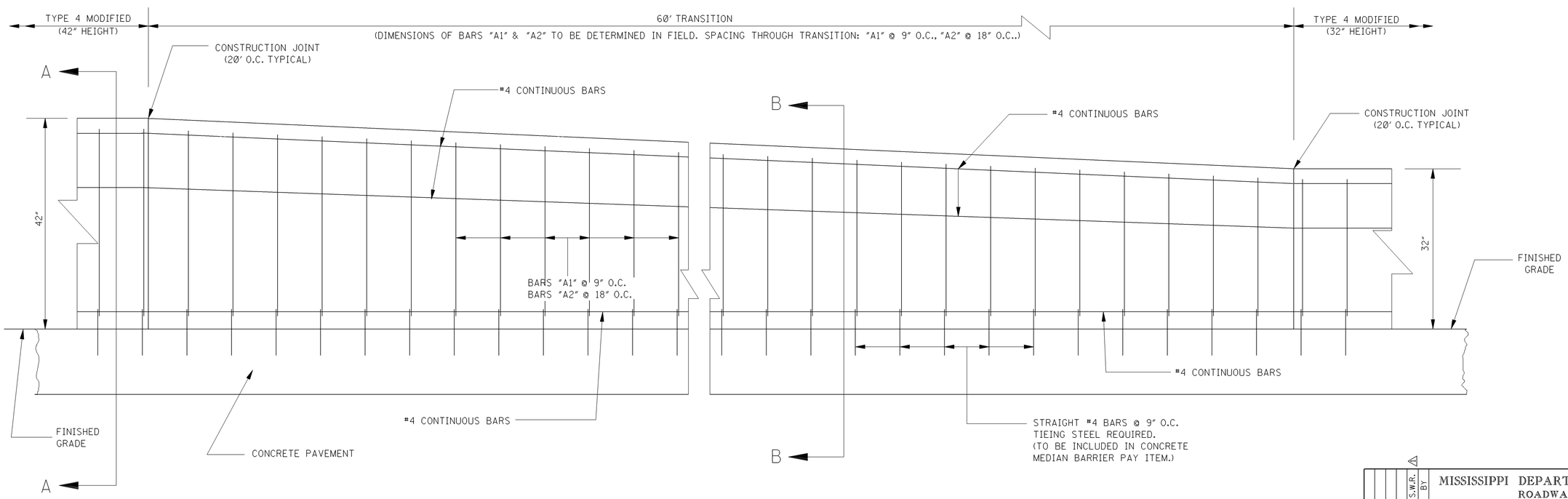

ELEVATION

GENERAL NOTES:

1. FOR ADDITIONAL DETAILS, SEE STANDARD DRAWING MB-2.
2. DRAINAGE OPENINGS SHALL BE PLACED AT EACH SAG POINT, 50' EACH SIDE OF SAG POINTS AND AT 100' INTERVALS THEREAFTER, WHERE THE FLOW OF SURFACE WATER RUNOFF IS TOWARD THE BARRIER. REINFORCING STEEL SHALL BE ADJUSTED TO PROVIDE A 2" CLEARANCE OVER THE OPENING.

DATE	REVISION	BY
3-01-02	REVISED NOTE △1	S.W.R.

MISSISSIPPI DEPARTMENT OF TRANSPORTATION
ROADWAY DESIGN DIVISION
STANDARD PLAN

INNOVATIVE MEDIAN BARRIER: CONCRETE
(CAST IN PLACE)
TYPE 4 MODIFIED
(42" HEIGHT)

ENGLISH

WORKING NUMBER MB-4

ISSUE DATE: OCTOBER 1, 1998

SHEET NUMBER 207

STATE	PROJECT NO.
MISS.	

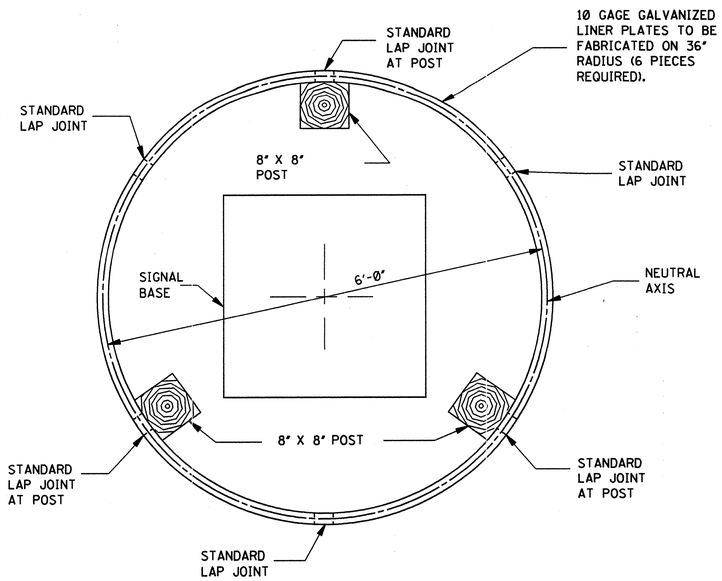

PLAN

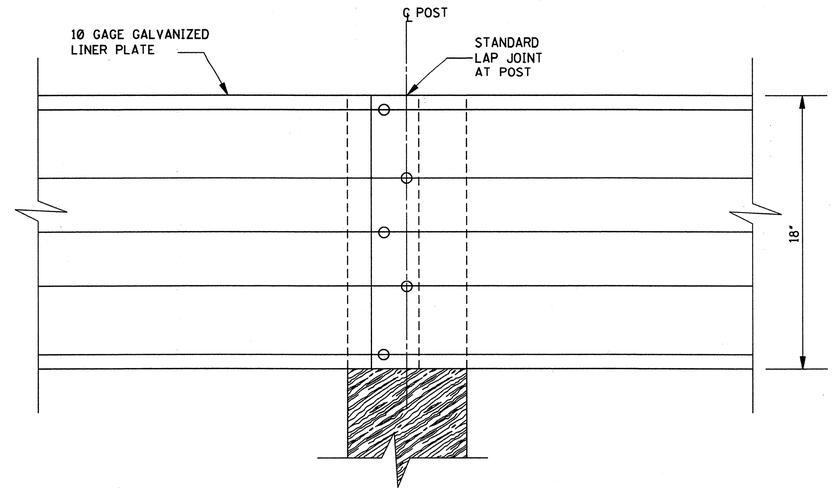

DETAIL OF STANDARD LAP JOINT AT POST
(3 REQUIRED)

NOTE: BOLTS ARE 5/8" - 11 UNC, 1 1/4" LONG GALVANIZED CARRIAGE BOLTS (3 REQUIRED PER STANDARD LAP JOINT AT POST) AND 5/8" - 11 UNC, 10" LONG GALVANIZED CARRIAGE BOLTS THRU POST (2 REQUIRED PER STANDARD LAP JOINT AT POST).

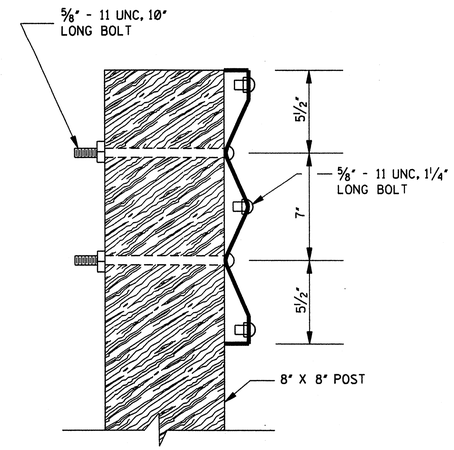

SECTION OF STANDARD LAP JOINT AT POST

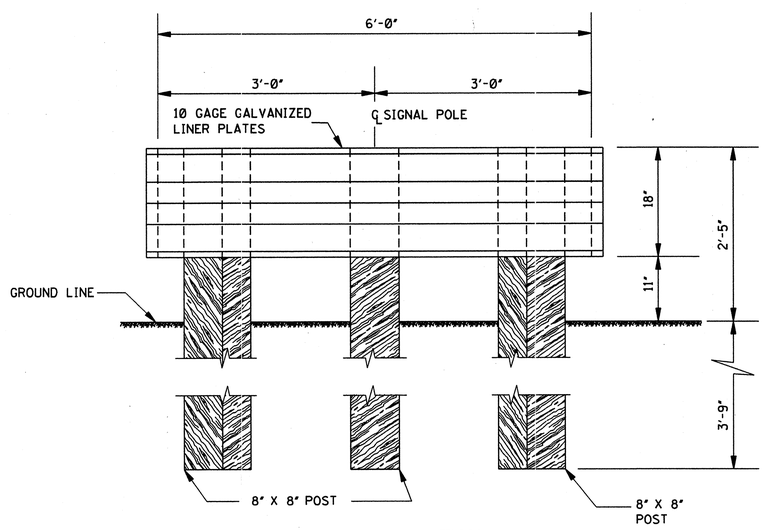

ELEVATION

NOTE: SIGNAL BASE AND POLE NOT SHOWN.

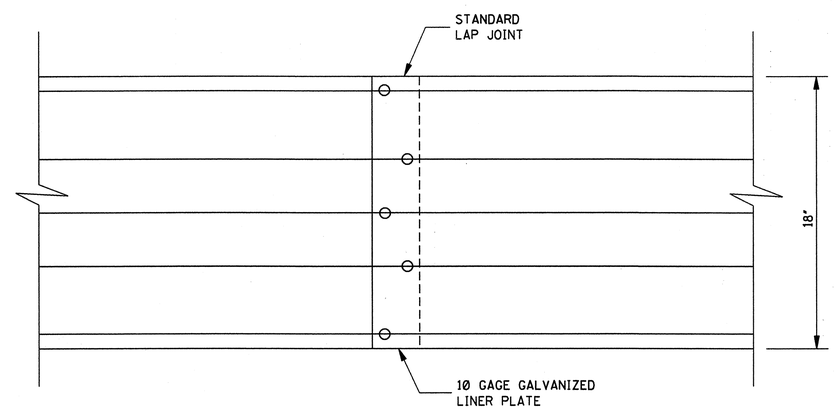

DETAIL OF STANDARD LAP JOINT
(3 REQUIRED)

NOTE: BOLTS ARE 5/8" - 11 UNC, 1 1/4" LONG GALVANIZED CARRIAGE BOLTS (5 REQUIRED PER STANDARD LAP JOINT).

GENERAL NOTES:

1. LINER PLATE MAY BE GALVANIZED AFTER FABRICATION IN ACCORDANCE WITH COATING DESIGNATION G210 - ASTM A 525.
2. ALL POSTS SHALL BE 8" X 8" TREATED ROUGH TIMBER.

DATE	REVISION	BY

MISSISSIPPI DEPARTMENT OF TRANSPORTATION
ROADWAY DESIGN DIVISION
STANDARD PLAN

PROTECTIVE DEVICE FOR RAILROAD SIGNAL

DEPARTMENT OF TRANSPORTATION ENGLISH MISSISSIPPI

WORKING NUMBER RS-1

ISSUE DATE: OCTOBER 1, 1998

SHEET NUMBER 208

STATE	PROJECT NO.
MISS.	

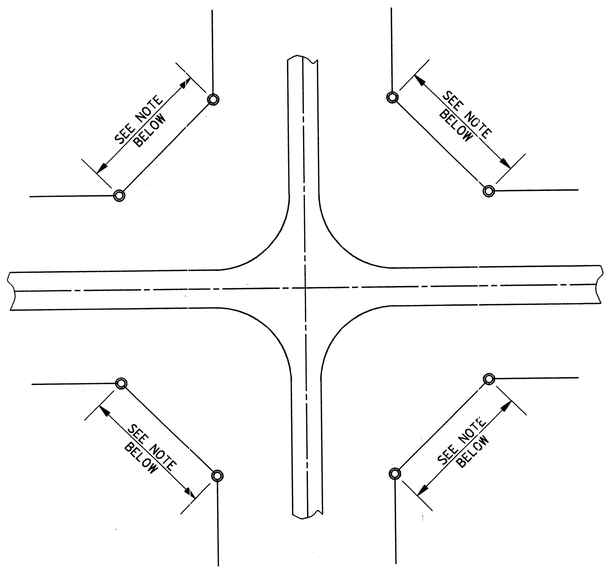

PLAN SHOWING LOCATION OF GUARD POSTS ON FLARED RIGHT-OF-WAY

NOTE: GUARD POSTS EVENLY SPACED @ 5'-6" ON CENTER MAX.

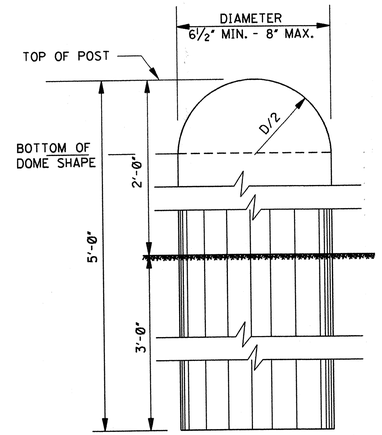

ELEVATION

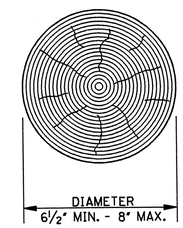

SECTION

DETAILS OF WOOD GUARD POST– TYPE I

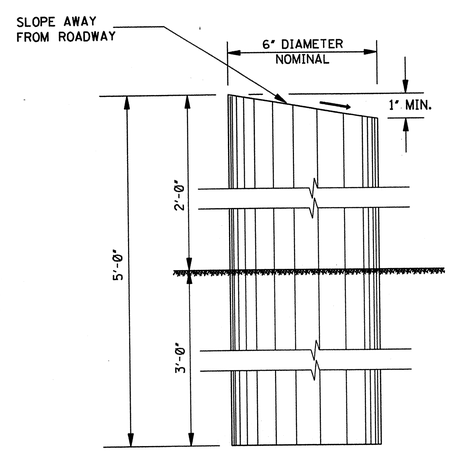

ELEVATION

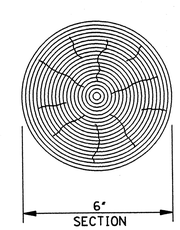

SECTION

DETAILS OF WOOD GUARD POST– TYPE II

GENERAL NOTES:

1. POSTS SHALL BE PEELED AND ROUNDED BEFORE TREATMENT.
2. TYPE I POSTS SHALL BE ROUNDED ON TOP IN AN APPROVED MANNER.

DATE	REVISION	BY

MISSISSIPPI DEPARTMENT OF TRANSPORTATION
ROADWAY DESIGN DIVISION
STANDARD PLAN

GUARD POST

ENGLISH

WORKING NUMBER GP-1

ISSUE DATE: OCTOBER 1, 1998

SHEET NUMBER 209

STATE	PROJECT NO.
MISS.	

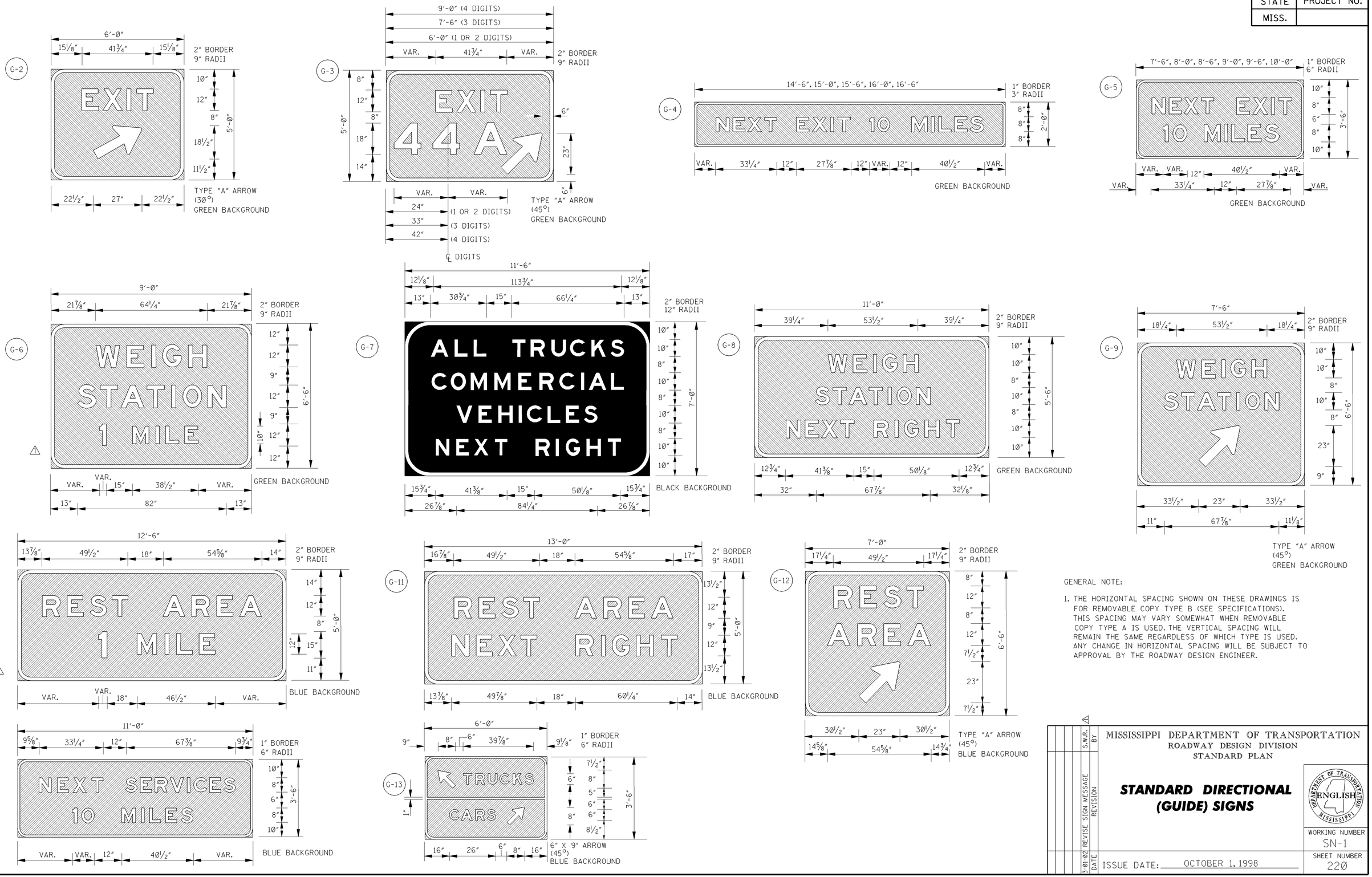

GENERAL NOTE:

1. THE HORIZONTAL SPACING SHOWN ON THESE DRAWINGS IS FOR REMOVABLE COPY TYPE B (SEE SPECIFICATIONS). THIS SPACING MAY VARY SOMEWHAT WHEN REMOVABLE COPY TYPE A IS USED. THE VERTICAL SPACING WILL REMAIN THE SAME REGARDLESS OF WHICH TYPE IS USED. ANY CHANGE IN HORIZONTAL SPACING WILL BE SUBJECT TO APPROVAL BY THE ROADWAY DESIGN ENGINEER.

DATE	REVISION	BY
3-01-02	REVISE SIGN MESSAGE	S.W.R.

MISSISSIPPI DEPARTMENT OF TRANSPORTATION
ROADWAY DESIGN DIVISION
STANDARD PLAN

STANDARD DIRECTIONAL (GUIDE) SIGNS

ENGLISH

WORKING NUMBER SN-1

SHEET NUMBER 220

ISSUE DATE: OCTOBER 1, 1998

STATE	PROJECT NO.
MISS.	

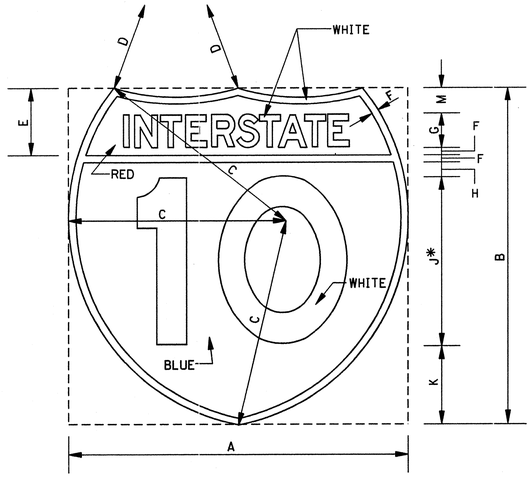

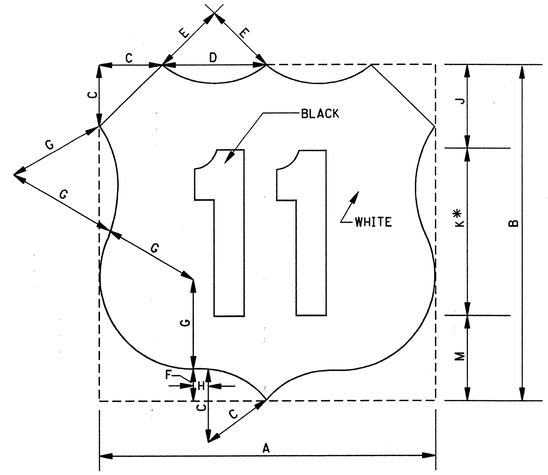

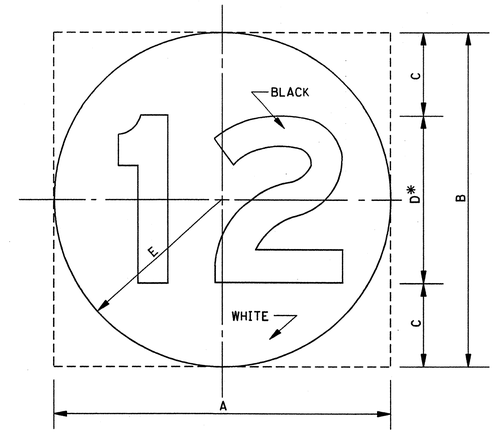

GENERAL NOTES:

1. U.S. AND MISSISSIPPI SHIELDS DO NOT HAVE AN OUTSIDE BORDER.
2. INTERSTATE, U.S. AND MISSISSIPPI SHIELDS SHOWN ON THIS DRAWING ARE TO BE USED ONLY ON GUIDE SIGNS. SEE OTHER DRAWINGS FOR SHIELDS TO BE USED INDEPENDENTLY AS ROUTE MARKERS.
3. ON INTERSTATE SHIELDS, THE LEGEND AND BACKGROUND SHALL BE REFLECTORIZED.
4. ON U.S. AND MISSISSIPPI SHIELDS, THE BACKGROUND SHALL BE REFLECTORIZED.

* 5. IN SOME CASES, NUMERALS CANNOT BE ACCOMMODATED WITHIN THE SPACE AVAILABLE. FOR THESE SITUATIONS, THE STANDARD SERIES "D" NUMERALS MAY BE REDUCED TO SERIES "C" NUMERALS OR AS A SECOND CHOICE TO THE NEXT SMALLER HEIGHT COMMONLY AVAILABLE.

	12" NUMERALS		18" NUMERALS		24" NUMERALS	
	2 DIGITS	3 DIGITS	2 DIGITS	3 DIGITS	2 DIGITS	3 DIGITS
A	24"	30"	36"	45"	48"	60"
B	24"	24"	36"	36"	48"	48"
C	15"	17"	22½"	25½"	30"	34"
D	15"	24"	22½"	36"	30"	48"
E	5"	5"	7½"	7½"	10"	10"
F	½"	½"	¾"	¾"	1"	1"
G	2.5C	2.5D	3.75C	3.75D	5C	5D
H	1"	1"	1½"	1½"	2"	2"
*J	12"	12"	18"	18"	24"	24"
K	5½"	5½"	8¼"	8¼"	11"	11"
M	2"	2"	3"	3"	4"	4"

	12" NUMERALS		18" NUMERALS		24" NUMERALS	
	2 DIGITS	3 DIGITS	2 DIGITS	3 DIGITS	2 DIGITS	3 DIGITS
A	24"	30"	36"	45"	48"	60"
B	24"	24"	36"	36"	48"	48"
C	5"	5"	7½"	7½"	10"	10"
D	7"	10"	10½"	15"	14"	20"
E	5"	9"	7½"	13½"	10"	18"
F	2"	2"	3"	3"	4"	4"
G	7"	7"	10½"	10½"	14"	14"
H	1"	4"	1½"	5½"	2"	8"
J	5½"	5½"	8½"	8½"	11"	11"
*K	12"	12"	18"	18"	24"	24"
M	6½"	6½"	9¾"	9¾"	13"	13"

	DIMENSIONS (INCHES)				
	A	B	C	D*	E
1,2-DIGIT(S)	24"	24"	6"	12"	12"
1,2-DIGIT(S)	36"	36"	9"	18"	18"
1,2-DIGIT(S)	48"	48"	12"	24"	24"
3-DIGITS	30"	24"	6"	12"	VAR.
3-DIGITS	45"	36"	9"	18"	VAR.
3-DIGITS	60"	48"	12"	24"	VAR.

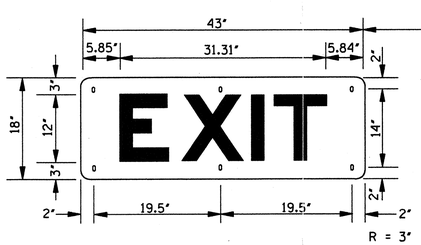

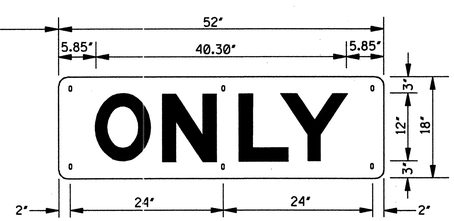

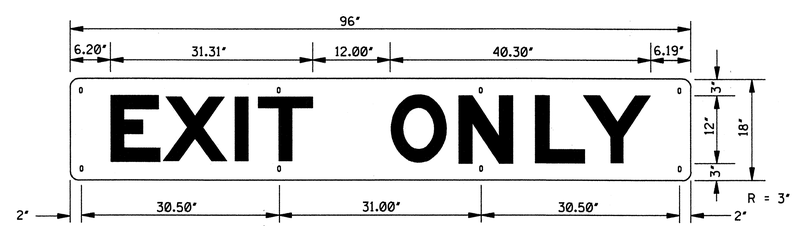

GENERAL NOTES:

1. THESE ARE "OVERLAY" SIGNS FABRICATED ON 0.080" THICK ALUMINUM (6061-T6) AND ARE TO BE RIVETED TO DIRECTIONAL SIGNS DESIGNATED ON PLANS. THESE SIGNS WILL NOT BE PAID FOR AS SEPARATE SIGNS BUT SHALL BE CONSIDERED AS PART OF THE MAJOR SIGNS TO WHICH THEY ARE AFFIXED.
2. LETTER SIZE: 12" SERIES "D"
   COLOR: LEGEND - BLACK; BACKGROUND - HI-INTENSITY YELLOW

DATE	REVISION	BY

MISSISSIPPI DEPARTMENT OF TRANSPORTATION
ROADWAY DESIGN DIVISION
STANDARD PLAN

ROUTE SHIELDS AND "EXIT ONLY" PANELS

ENGLISH

WORKING NUMBER SN-2

ISSUE DATE: OCTOBER 1, 1998

SHEET NUMBER 221

STATE	PROJECT NO.
MISS.	

SIGN NUMBER	D9-2R D9-2L	ARROW	D10-1	D10-2	D10-3	M1-1	M1-101	M1-4		M1-6		M2-1	M2-1A	M3-3*	M3-3A *	M3-103A *
ALUMINUM (6061-T6) SIGN BLANK THICKNESS	0.080"		0.080"	0.080"	0.080"	0.080"	0.125"	0.080"		0.080"		0.080"		0.080"		0.080"
LEGEND	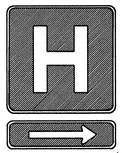 R = 1½"		R = 1½"	R = 1½"	R = 1½"			R = 1½"		R = 1½" e = 11" (24" X 24") e = VAR. (30" X 24")		R = 1½"		R = 1½"		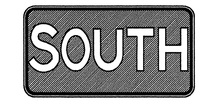 R = 1½"
LETTER & NUMERAL SERIES	16" SERIES "E"		4" SERIES "C" 10" SERIES "C"	4" SERIES "C" 10" SERIES "C"	4" SERIES "C" 10" SERIES "C"	(SEE NOTE BELOW)		(SEE NOTE BELOW)		12" SERIES "D" (SEE NOTE BELOW)		9" SERIES "C"		8" SERIES "C" 6" SERIES "C"		10" SERIES "C" 8" SERIES "C"
WIDTH OF BORDER INSIDE	½" WHITE		½" WHITE	½" WHITE	½" WHITE	½" WHITE	¾" WHITE	BLACK OUTSIDE BORDER		BLACK OUTSIDE BORDER		⅝" BLACK ⅜" WHITE	½" WHITE	⅝" BLACK ⅜" WHITE	½" WHITE	½" WHITE
WIDTH OF BORDER OUTSIDE																
SIZE (WIDTH X HEIGHT)	24" X 24"	24" X 6"	12" X 24"	12" X 36"	12" X 48"	24" X 24" (1 OR 2 DIGITS) 30" X 24" (3 DIGITS)	36" X 36" (1 OR 2 DIGITS) 45" X 36" (3 DIGITS)	24" X 24" (1 OR 2 DIGITS) 30" X 24" (3 DIGITS)		24" X 24" (1 OR 2 DIGITS) 30" X 24" (3 DIGITS)		21" X 15"		24" X 12"		30" X 15"
COLORS COPY	WHITE		WHITE	WHITE	WHITE	WHITE		BLACK		BLACK		BLACK	WHITE	BLACK	WHITE	WHITE
COLORS BACKGROUND	BLUE		GREEN	GREEN	GREEN	TOP-RED; BOTTOM-BLUE		WHITE		WHITE		WHITE	BLUE	WHITE	BLUE	BLUE
REFLECTORIZATION	ALL		ALL	ALL	ALL	ALL		BACKGROUND		BACKGROUND		B'GROUND	ALL	B'GROUND	ALL	ALL
NUMBER OF POSTS FOR MOUNTING	1		1	1	1	1		1		1		1		1		1
NUMBER OF HOLES TO BE PUNCHED (⅜" DIA.)	2	2	2	2	3	2	4	2 (VERT. PUNCHING)	2 (HORIZ. PUNCHING)	2 (VERT. PUNCHING)	2 (HORIZ. PUNCHING)	2		2		2
PUNCHING DISTANCE FROM EACH VERTICAL EDGE	12" (VERT. CENTER)		6" (VERT. CENTER)	6" (VERT. CENTER)	6" (VERT. CENTER)	VERT. CENTER	5" FROM VERT. CENTER	VERT. CENTER	5" FROM VERT. CENTER	VERT. CENTER	5" FROM VERT. CENTER	VERT. CENTER		12" (V. PUNCH) 7" (H.PUNCH)	12"	10"
PUNCHING DISTANCE FROM TOP EDGE	3"; 21"	1"; 5"	2"; 22"	2"; 34"	2"; 21"; 46"	2"; 22"	3";30"	3"; 21"	12"	3"; 21"	12"	1½"; 13½"		1½"; 10½" (V.P.) 6" (H.PUNCH)	1½"; 10½"	7½"

SIGN NUMBER	M4-5	M4-5A	M5-1L	M5-1LA	M5-1R	M5-1RA	M5-2L	M5-2LA	M5-2R	M5-2RA	M6-1L	M6-1LA	M6-1R	M6-1RA	M6-2L	M6-2LA	M6-2R	M6-2RA	M6-3	M6-3A	M6-4	M6-4A	M6-6L	M6-6LA	M6-6R	M6-6RA
ALUMINUM (6061-T6) SIGN BLANK THICKNESS	0.080"		0.080"		0.080"		0.080"		0.080"		0.080"		0.080"		0.080"		0.080"		0.080"		0.080"		0.080"		0.080"	
LEGEND	R = 1½"		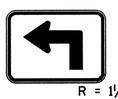 R = 1½"		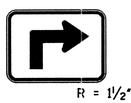 R = 1½"		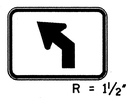 R = 1½"		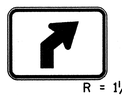 R = 1½"		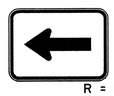 R = 1½"		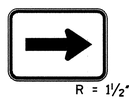 R = 1½"		R = 1½"		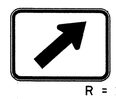 R = 1½"		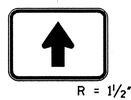 R = 1½"		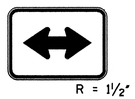 R = 1½"		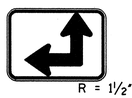 R = 1½"		R = 1½"	
LETTER & NUMERAL SERIES	6" SERIES "E"																									
WIDTH OF BORDER INSIDE	⅝" BLACK ⅜" WHITE	½" WHITE	⅝" BLACK ⅜" WHITE	½" WHITE	⅝" BLACK ⅜" WHITE	½" WHITE	⅝" BLACK ⅜" WHITE	½" WHITE	⅝" BLACK ⅜" WHITE	½" WHITE	⅝" BLACK ⅜" WHITE	½" WHITE	⅝" BLACK ⅜" WHITE	½" WHITE	⅝" BLACK ⅜" WHITE	½" WHITE	⅝" BLACK ⅜" WHITE	½" WHITE	⅝" BLACK ⅜" WHITE	½" WHITE	⅝" BLACK ⅜" WHITE	½" WHITE	⅝" BLACK ⅜" WHITE	½" WHITE	⅝" BLACK ⅜" WHITE	½" WHITE
SIZE (WIDTH X HEIGHT)	24" X 12"		21" X 15"		21" X 15"		21" X 15"		21" X 15"		21" X 15"		21" X 15"		21" X 15"		21" X 15"		21" X 15"		21" X 15"		21" X 15"		21" X 15"	
COLORS COPY	BLACK	WHITE	BLACK	WHITE	BLACK	WHITE	BLACK	WHITE	BLACK	WHITE	BLACK	WHITE	BLACK	WHITE	BLACK	WHITE	BLACK	WHITE	BLACK	WHITE	BLACK	WHITE	BLACK	WHITE	BLACK	WHITE
COLORS BACKGROUND	WHITE	BLUE	WHITE	BLUE	WHITE	BLUE	WHITE	BLUE	WHITE	BLUE	WHITE	BLUE	WHITE	BLUE	WHITE	BLUE	WHITE	BLUE	WHITE	BLUE	WHITE	BLUE	WHITE	BLUE	WHITE	BLUE
REFLECTORIZATION	B'GROUND	ALL	B'GROUND	ALL	B'GROUND	ALL	B'GROUND	ALL	B'GROUND	ALL	B'GROUND	ALL	B'GROUND	ALL	B'GROUND	ALL	B'GROUND	ALL	B'GROUND	ALL	B'GROUND	ALL	B'GROUND	ALL	B'GROUND	ALL
NUMBER OF POSTS FOR MOUNTING	1		1		1		1		1		1		1		1		1		1		1		1		1	
NUMBER OF HOLES TO BE PUNCHED (⅜" DIA.)	2		2		2		2		2		2		2		2		2		2		2		2		2	
PUNCHING DISTANCE FROM EACH VERTICAL EDGE	12" (VERT. CENTER)		VERT. CENTER		VERT. CENTER		VERT. CENTER		VERT. CENTER		VERT. CENTER		VERT. CENTER		VERT. CENTER		VERT. CENTER		VERT. CENTER		VERT. CENTER		VERT. CENTER		VERT. CENTER	
PUNCHING DISTANCE FROM TOP EDGE	1½"; 10½"		1½"; 13½"		1½"; 13½"		1½"; 13½"		1½"; 13½"		1½"; 13½"		1½"; 13½"		1½"; 13½"		1½"; 13½"		1½"; 13½"		1½"; 13½"		1½"; 13½"		1½"; 13½"	

GENERAL NOTES:

1. THE DIMENSIONS FOR THE INTERSTATE AND U.S. SHIELDS SHALL CONFORM WITH THOSE SHOWN IN THE MANUAL ON UNIFORM TRAFFIC CONTROL DEVICES, LATEST EDITION.
2. ROUTE MARKERS AND SHIELDS SHOWN ON THIS SHEET ARE FOR USE INDEPENDENTLY OF INTERSTATE DIRECTIONAL (GUIDE) SIGNS. SEE OTHER DRAWINGS FOR SHIELDS TO BE USED ON INTERSTATE DIRECTIONAL (GUIDE) SIGNS.
3. THE QUANTITIES LISTED ON THE SUMMARY OF QUANTITIES SHEET FOR THE SIGNS SHOWN ON THIS SHEET WILL BE USED AS THE BASIS FOR FINAL PAYMENT, EXCEPT WHERE SIGNS ARE MODIFIED FROM THAT SHOWN.
4. M1-6: IN SOME CASES NUMERALS CANNOT BE ACCOMMODATED WITHIN THE SPACE AVAILABLE. FOR THESE SITUATIONS, THE STANDARD SERIES "D" NUMERAL SHALL BE REDUCED TO SERIES "C".

*

NORTH	EAST	SOUTH	WEST
M3-1	M3-2	M3-3	M3-4
M3-1A	M3-2A	M3-3A	M3-4A
M3-101A	M3-102A	M3-103A	M3-104A

DATE	REVISION	BY

MISSISSIPPI DEPARTMENT OF TRANSPORTATION
ROADWAY DESIGN DIVISION
STANDARD PLAN

STANDARD ROADSIDE SIGNS

ENGLISH

WORKING NUMBER SN-3

ISSUE DATE: OCTOBER 1, 1998

SHEET NUMBER 222

STATE	PROJECT NO.
MISS.	

SIGN NUMBER	R1-1	R1-101	R1-2	R1-102	R2-1	R2-101	R2-102	R2-104	R3-1	R3-2	R3-3	R3-4	R3-5	R4-103
ALUMINUM (6061-T6) SIGN BLANK THICKNESS	0.080"	0.125"	0.125"	0.125"	0.080"	0.125"	0.125"	0.125"	0.080"	0.080"	0.080"	0.080"	0.080"	0.125"
LEGEND			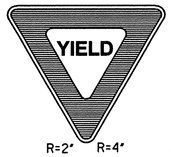 R=2" R=4"		R=1½" R=3"		R=3"	R=3"	R=1⅞"	R=1⅞"	R=1½"	R=1⅞"	R=1⅞"	R=3"
LETTER & NUMERAL SERIES	12" SERIES "C"	16" SERIES "C"	3" SERIES "C"	5" SERIES "C"	4" SERIES "E" 4" SERIES "E" 10" SERIES "E"	8" SERIES "E" 8" SERIES "E" 16" SERIES "E"	8" SERIES "D" 16" SERIES "E"	8" SERIES "C" 8" SERIES "C" 16" SERIES "D"			6" SERIES "D" 5" SERIES "D"		6" SERIES "D"	8" SERIES "D"
WIDTH OF BORDER INSIDE	⅞" WHITE	1¼" WHITE	5" RED	8" RED	⅝" BLACK	1¼" BLACK	1¼" BLACK	⅞" BLACK	¾" BLACK	¾" BLACK	⅝" BLACK	¾" BLACK	¾" BLACK	1¼" BLACK
WIDTH OF BORDER OUTSIDE			¾" WHITE	1½" WHITE	⅞" WHITE	¾" WHITE	¾" WHITE	¾" WHITE	½" WHITE	½" WHITE	⅜" WHITE	½" WHITE	½" WHITE	¾" WHITE
SIZE (WIDTH X HEIGHT)	36" OCTAGON	48" OCTAGON	36" EQUIL. TRIANGLE	60" EQUIL. TRIANGLE	24" X 30"	48" X 60"	48" X 48"	48" X 48"	30" X 30"	30" X 30"	24" X 24"	30" X 30"	30" X 36"	48" X 60"
COLORS COPY	WHITE	WHITE	RED	RED	BLACK	BLACK	BLACK	BLACK	BLACK & RED	BLACK & RED	BLACK	BLACK & RED	BLACK	BLACK
COLORS BACKGROUND	RED	RED	WHITE	WHITE	WHITE	WHITE	WHITE	WHITE	WHITE	WHITE	WHITE	WHITE	WHITE	WHITE
REFLECTORIZATION	ALL	ALL	ALL	ALL	B'GROUND	B'GROUND	BACKGROUND	BACKGROUND	BACKGROUND, CIRCLE, & DIAGONAL	BACKGROUND, CIRCLE, & DIAGONAL	BACKGROUND	BACKGROUND, CIRCLE, & DIAGONAL	BACKGROUND	BACKGROUND
NUMBER OF POSTS FOR MOUNTING	1	1	1	1	1	1	---	---	1	1	1	1	1	1
NUMBER OF HOLES TO BE PUNCHED (⅜" DIA.)	2	4	2	4	2	6	4	4	2	2	2	2	2	6
PUNCHING DISTANCE FROM EACH VERTICAL EDGE	18" (VERT. CENTER)	10"	18" (VERT. CENTER)	20"	12" (VERT. CENTER)	10"	10"	10"	15" (VERT. CENTER)	15" (VERT. CENTER)	12" (VERT. CENTER)	15" (VERT. CENTER)	15" (VERT. CENTER)	10"
PUNCHING DISTANCE FROM TOP EDGE	3"; 33"	10"; 38"	2"; 26"	3"; 27"	3"; 27"	4"; 30"; 56"	4"; 44"	4"; 44"	3"; 27"	3"; 27"	3"; 21"	3"; 27"	3"; 33"	4"; 30"; 56"

SIGN NUMBER	R4-7	R4-107	R4-8	R5-1	R5-101	R5-1a	R6-1L, R6-1R	R6-2L, R6-2R	R8-104	R11-101	
ALUMINUM (6061-T6) SIGN BLANK THICKNESS	0.080"	0.125"	0.080"	0.080"	0.125"	0.125"	0.125"	0.080"	0.125"	0.125"	
LEGEND	R=1½" R=2¼"		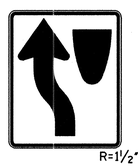 R=1½"	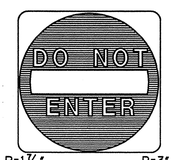 R=1⅞" R=3"		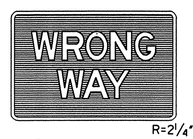 R=2¼"	R=1½"	R=1½"	R=2¼"	R=3"	
LETTER & NUMERAL SERIES				4" SERIES "D"	6" SERIES "D"	8" SERIES "D"	4" SERIES "D"	5" SERIES "D"	6" SERIES "D"	10" SERIES "C"	
WIDTH OF BORDER INSIDE	⅝" BLACK	⅞" BLACK	⅝" BLACK	WHITE OUT-	WHITE OUT-	1" WHITE		⅝" BLACK	⅞" BLACK	1¼" BLACK	
WIDTH OF BORDER OUTSIDE	⅞" WHITE	⅝" WHITE	⅞" WHITE	SIDE BORDER	SIDE BORDER		½" WHITE	⅞" WHITE	⅝" WHITE	¾" WHITE	
SIZE (WIDTH X HEIGHT)	24" X 30"	36" X 48"	24" X 30"	30" X 30"	42" X 42"	42" X 36"	36" X 12"	18" X 24"	48" X 36"	48" X 60"	
COLORS COPY	BLACK	BLACK	BLACK	WHITE	WHITE	WHITE	BLACK (WHITE ARROW)	BLACK	BLACK	BLACK	
COLORS BACKGROUND	WHITE	WHITE	WHITE	RED	RED	RED	BLACK	WHITE	WHITE	WHITE	
REFLECTORIZATION	BACKGROUND	BACKGROUND	BACKGROUND	ALL	ALL	ALL	ARROW & BORDER	BACKGROUND	BACKGROUND	BACKGROUND	
NUMBER OF POSTS FOR MOUNTING	1	1	1	1	1	1	1	1	2	1	
NUMBER OF HOLES TO BE PUNCHED (⅜" DIA.)	2	4	2	2	4	4	2	2	4	6	
PUNCHING DISTANCE FROM EACH VERTICAL EDGE	12" (VERT. CENTER)	5"	12" (VERT. CENTER)	15" (VERT. CENTER)	8"	8"	18" (VERT. CENTER)	9" (VERT. CENTER)	10"	10"	
PUNCHING DISTANCE FROM TOP EDGE	3"; 27"	4"; 44"	3"; 27"	3"; 27"	4"; 38"	3"; 33"	1½"; 10½"	3"; 21"	6"; 30"	4"; 30"; 56"	

GENERAL NOTES:

1. THE QUANTITIES LISTED ON THE SUMMARY OF QUANTITIES SHEET FOR THE SIGNS SHOWN ON THIS SHEET WILL BE USED AS THE BASIS FOR FINAL PAYMENT, EXCEPT WHERE SIGNS ARE MODIFIED FROM THAT SHOWN.

2. THE SPEED LIMITS REQUIRED ON SIGNS R2-1 AND R2-101 WILL BE SHOWN ON INDIVIDUAL PLAN SHEETS.

DATE	REVISION	BY

MISSISSIPPI DEPARTMENT OF TRANSPORTATION
ROADWAY DESIGN DIVISION
STANDARD PLAN

STANDARD ROADSIDE SIGNS

ENGLISH

WORKING NUMBER SN-3A

ISSUE DATE: OCTOBER 1, 1998

SHEET NUMBER 223

STATE	PROJECT NO.
MISS.	

SIGN NUMBER	W1-1L W1-1R	W1-2L W1-2R	W1-3L W1-3R	W1-4L W1-4R	W1-6L W1-6R	W1-7	W3-1a	W3-2a	W3-3	W4-1L W4-1R	W4-101L W4-101R
ALUMINUM (6061-T6) SIGN BLANK THICKNESS	0.125"	0.125"	0.125"	0.125"	0.125"	0.125"	0.125"	0.125"	0.125"	0.125"	0.125"
LEGEND LETTER & NUMERAL SERIES					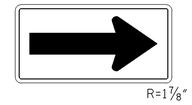	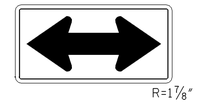	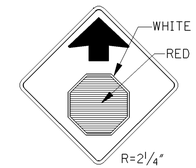	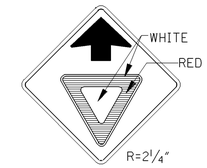	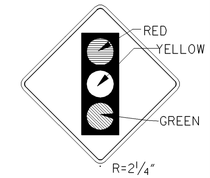	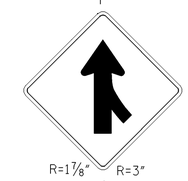	
WIDTH OF BORDER INSIDE OUTSIDE	3/4" BLACK 1/2" YELLOW	3/4" BLACK 1/2" YELLOW	3/4" BLACK 1/2" YELLOW	3/4" BLACK 1/2" YELLOW	3/4" BLACK 1/2" YELLOW	3/4" BLACK 1/2" YELLOW	7/8" BLACK 5/8" YELLOW	7/8" BLACK 5/8" YELLOW	7/8" BLACK 5/8" YELLOW	3/4" BLACK 1/2" YELLOW	1 1/4" BLACK 3/4" YELLOW
SIZE (WIDTH X HEIGHT)	30" X 30"	30" X 30"	30" X 30"	30" X 30"	48" X 24"	48" X 24"	36" X 36"	36" X 36"	36" X 36"	30" X 30"	48" X 48"
COLORS COPY BACKGROUND	BLACK YELLOW	BLACK YELLOW	BLACK YELLOW	BLACK YELLOW	BLACK YELLOW	BLACK YELLOW	BLACK YELLOW	BLACK YELLOW	BLACK YELLOW	BLACK YELLOW	BLACK YELLOW
REFLECTORIZATION	BACKGROUND	BACKGROUND	BACKGROUND	BACKGROUND	BACKGROUND	BACKGROUND	BACKGROUND & SYMBOL	BACKGROUND & SYMBOL	BACKGROUND & "LIGHTS"	BACKGROUND	BACKGROUND
NUMBER OF POSTS FOR MOUNTING	1	1	1	1	2	2	1	1	1	1	1
NUMBER OF HOLES TO BE PUNCHED (3/8" DIA.)	2	2	2	2	4	4	2	2	2	2	4
PUNCHING DISTANCE FROM EACH VERT. EDGE	VERT. CENTER	VERT. CENTER	VERT. CENTER	VERT. CENTER	6"	6"	VERT. CENTER	VERT. CENTER	VERT. CENTER	VERT. CENTER	14 1/2" FROM VERT. CENTER
PUNCHING DISTANCE FROM TOP EDGE	15" FROM HORIZ. CENTER	15" FROM HORIZ. CENTER	15" FROM HORIZ. CENTER	15" FROM HORIZ. CENTER	3"; 21"	3"; 21"	18" FROM HORIZ. CENTER	18" FROM HORIZ. CENTER	18" FROM HORIZ. CENTER	15" FROM HORIZ. CENTER	14 1/2" FROM HORIZ. CENTER

SIGN NUMBER	W4-2	W5-1	W6-1	W6-2	W6-3	W13-1	W13-2	W13-3	W10-1	W10-101	
ALUMINUM (6061-T6) SIGN BLANK THICKNESS	0.125"	0.125"	0.125"	0.125"	0.125"	0.080"	0.125"	0.125"	0.125"	0.125"	
LEGEND LETTER & NUMERAL SERIES	NOTE: SEE PLAN SHEETS FOR IDEOGRAM REQUIRED ON INDIVIDUAL SIGNS. 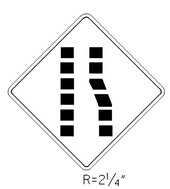	 6" SERIES "D"			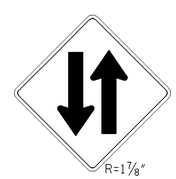	 8" SERIES "E" 3" SERIES "E"	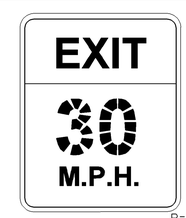 8" SERIES "E" 16" SERIES "E" 6" SERIES "E" (SEE NOTE)	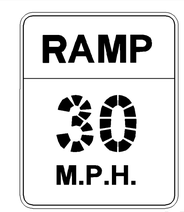 8" SERIES "E" 16" SERIES "E" 6" SERIES "E" (SEE NOTE)	 8" SERIES "E"	10" SERIES "E"	
WIDTH OF BORDER INSIDE OUTSIDE	7/8" BLACK 5/8" YELLOW	7/8" BLACK 5/8" YELLOW	7/8" BLACK 5/8" YELLOW	7/8" BLACK 5/8" YELLOW	3/4" BLACK 1/2" YELLOW	5/8" BLACK 3/8" YELLOW	1 1/4" BLACK 3/4" YELLOW	1 1/4" BLACK 3/4" YELLOW	3/4" BLACK 1/2" YELLOW	1 1/4" BLACK 3/4" YELLOW	
SIZE (WIDTH X HEIGHT)	36" X 36"	36" X 36"	36" X 36"	36" X 36"	30" X 30"	18" X 18"	48" X 60"	48" X 60"	36" DIAMETER	48" DIAMETER	
COLORS COPY BACKGROUND	BLACK YELLOW	BLACK YELLOW	BLACK YELLOW	BLACK YELLOW	BLACK YELLOW	BLACK YELLOW	BLACK YELLOW	BLACK YELLOW	BLACK YELLOW	BLACK YELLOW	
REFLECTORIZATION	BACKGROUND	BACKGROUND	BACKGROUND	BACKGROUND	BACKGROUND	BACKGROUND	BACKGROUND	BACKGROUND	BACKGROUND	BACKGROUND	
NUMBER OF POSTS FOR MOUNTING	1	1	1	1	△1 1	1	1	1	1	1	
NUMBER OF HOLES TO BE PUNCHED (3/8" DIA.)	2	2	2	2	2	2	6	6	2	4	
PUNCHING DISTANCE FROM EACH VERT. EDGE	VERT. CENTER	VERT. CENTER	VERT. CENTER	VERT. CENTER	VERT. CENTER	9" (VERT. CENTER)	10"	10"	15"	15" (VERT. CENTER)	
PUNCHING DISTANCE FROM TOP EDGE	18" FROM HORIZ. CENTER	18" FROM HORIZ. CENTER	18" FROM HORIZ. CENTER	18" FROM HORIZ. CENTER	15" FROM HORIZ. CENTER	3"; 15"	4"; 30"; 56"	4"; 30"; 56"	3"; 33"	5"; 43"	

GENERAL NOTES:

1. THE QUANTITIES LISTED ON THE SUMMARY OF QUANTITIES SHEET FOR THE SIGNS SHOWN ON THIS SHEET WILL BE USED AS THE BASIS FOR FINAL PAYMENT, EXCEPT WHERE SIGNS ARE MODIFIED FROM THAT SHOWN.

2. SIGNS W13-2 AND W13-3- THE STROKE WIDTH OF THE LETTER AND NUMERALS SHALL BE WIDENED TO 20% OF THE LETTER OR NUMERAL HEIGHT.

3. THE SPEEDS REQUIRED ON SIGNS W13-1, W13-2 AND W13-3 WILL BE SHOWN ON INDIVIDUAL PLAN SHEETS.

DATE	REVISION	BY
3-01-02	REVISED NO. OF POSTS	S.W.R.

MISSISSIPPI DEPARTMENT OF TRANSPORTATION
ROADWAY DESIGN DIVISION
STANDARD PLAN

STANDARD ROADSIDE SIGNS

ENGLISH

WORKING NUMBER
SN-3B

ISSUE DATE: OCTOBER 1, 1998

SHEET NUMBER
224

STATE	PROJECT NO.
MISS.	

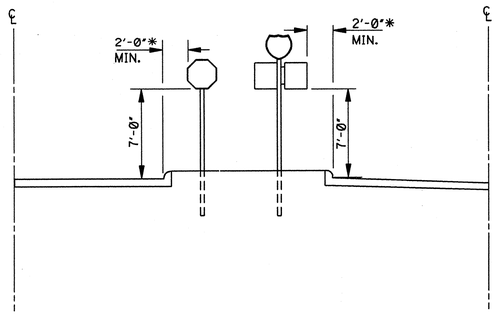

TYPICAL INSTALLATION IN ISLANDS OFF OF (OR ADJACENT TO) INTERSTATE MAIN FACILITY

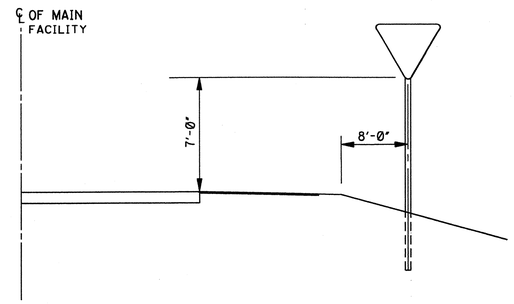

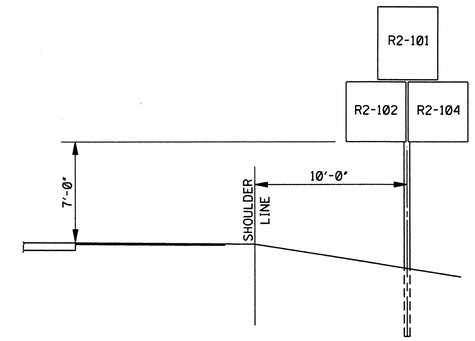

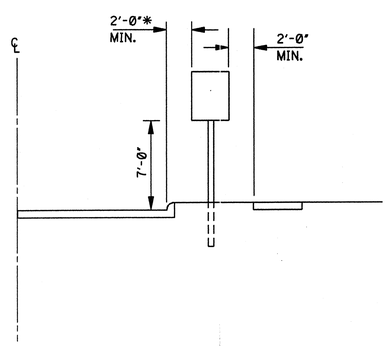

TYPICAL INSTALLATION ALONG FRONTAGE ROAD, RAMP OR STREET WHERE THERE IS NOT A USABLE SHOULDER

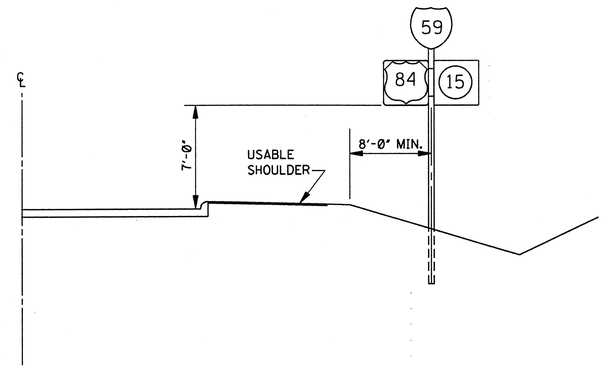

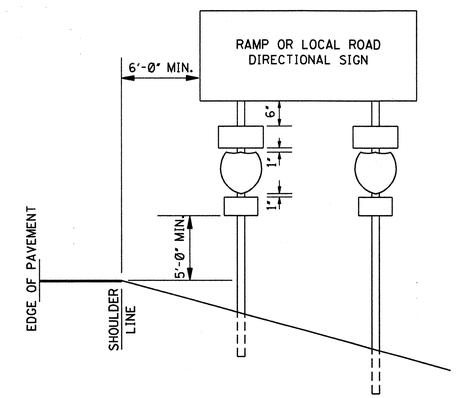

TYPICAL INSTALLATION ALONG THE INTERSTATE MAIN FACILITY AND ALONG RAMPS, FRONTAGE ROADS AND HIGHWAYS

* NOTE: THE 2'-0" MINIMUM OFFSET APPLIES ONLY TO STANDARD SIGNS MOUNTED ON U-SECTION POSTS. ALL STANDARD SIGNS MOUNTED ON PIPE WILL BE OFFSET A MINIMUM OF 4'-0". RAMP DESTINATION SIGNS WILL BE OFFSET 4'-0" FROM SHOULDERS.

DATE	REVISION	BY

MISSISSIPPI DEPARTMENT OF TRANSPORTATION
ROADWAY DESIGN DIVISION
STANDARD PLAN

STANDARD ROADSIDE SIGN ASSEMBLY AND INSTALLATION

ENGLISH

WORKING NUMBER
SN-4

ISSUE DATE: OCTOBER 1, 1998

SHEET NUMBER
225

STATE	PROJECT NO.
MISS.	

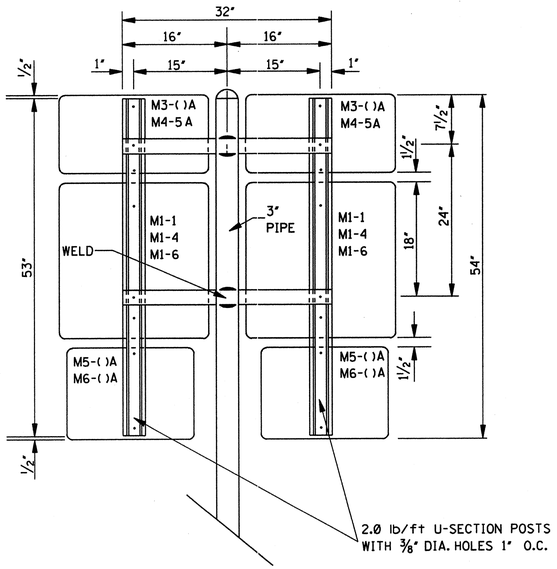

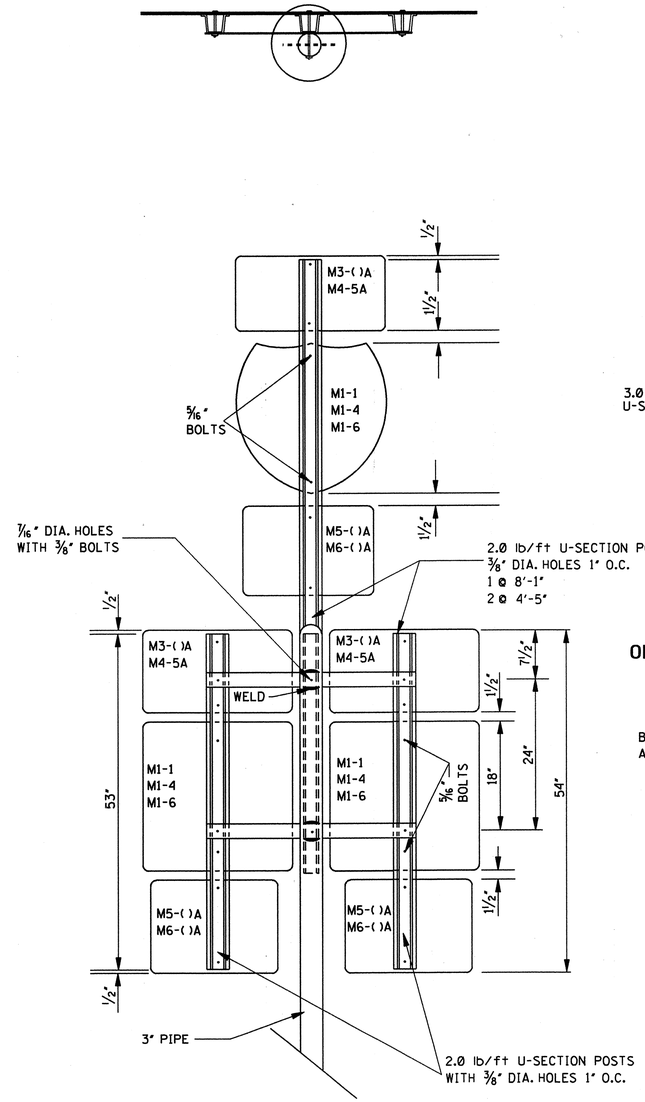

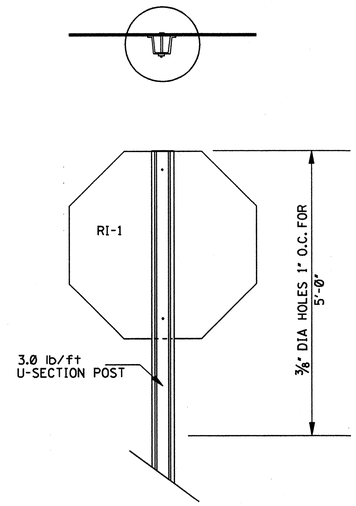

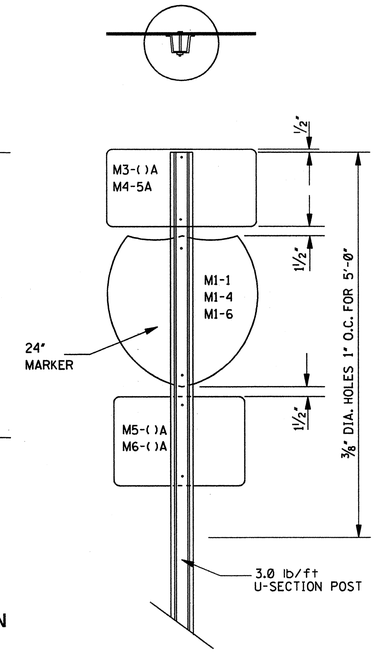

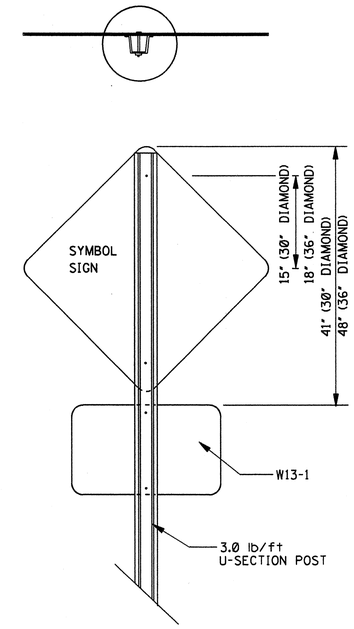

TYPICAL ASSEMBLY OF
"FLAT TOPPED" REGULATORY
OR WARNING SIGN MOUNTED ON
A SINGLE U-SECTION POST

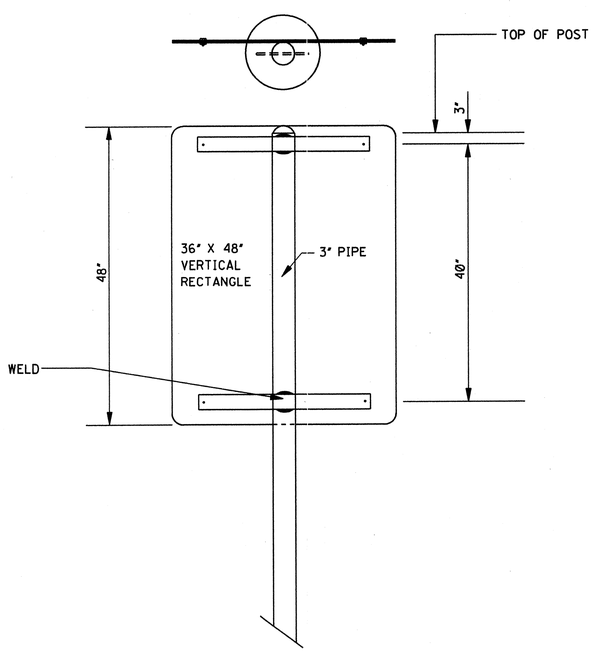

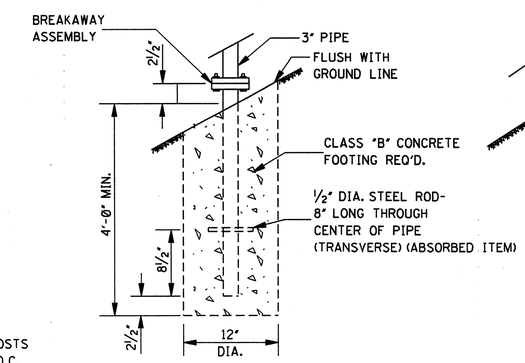

FOOTING DETAIL FOR
3" PIPE

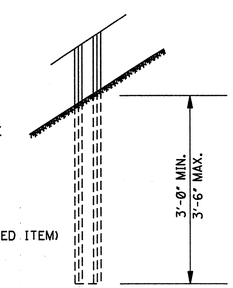

FOOTING DETAIL FOR
U-SECTION POSTS

GENERAL NOTES:

1. UNLESS OTHERWISE SPECIFIED, HORIZONTAL BRACES ARE 7/16" X 2 1/2" X VARIABLE LENGTH FLAT STEEL BARS. BARS ARE WELDED TO PIPE AS SHOWN. WHEN FABRICATION IS COMPLETE, POST SHALL BE GALVANIZED AS PER SECTION 630 OF THE STANDARD SPECIFICATION.
2. HOLES IN FLAT BARS ARE 3/8" DIAMETER.
3. SIGNS ARE FASTENED TO FLAT BARS AND U-SECTION POST WITH 5/16" BOLTS, WITH FLAT WASHER AND LOCK-NUTS.
4. GROUND PLATE NOT REQURIED ON U-SECTION POST.

DATE	REVISION	BY

MISSISSIPPI DEPARTMENT OF TRANSPORTATION
ROADWAY DESIGN DIVISION
STANDARD PLAN

STANDARD ROADSIDE SIGN ASSEMBLY AND INSTALLATION

DEPARTMENT OF TRANSPORTATION MISSISSIPPI ENGLISH

WORKING NUMBER
SN-4A

ISSUE DATE: OCTOBER 1, 1998

SHEET NUMBER
226

STATE	PROJECT NO.
MISS.	

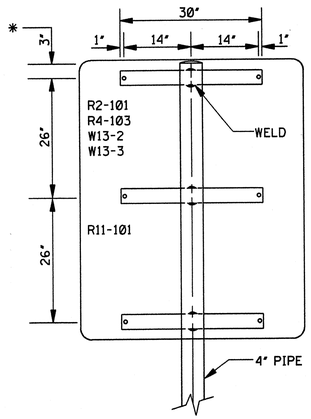

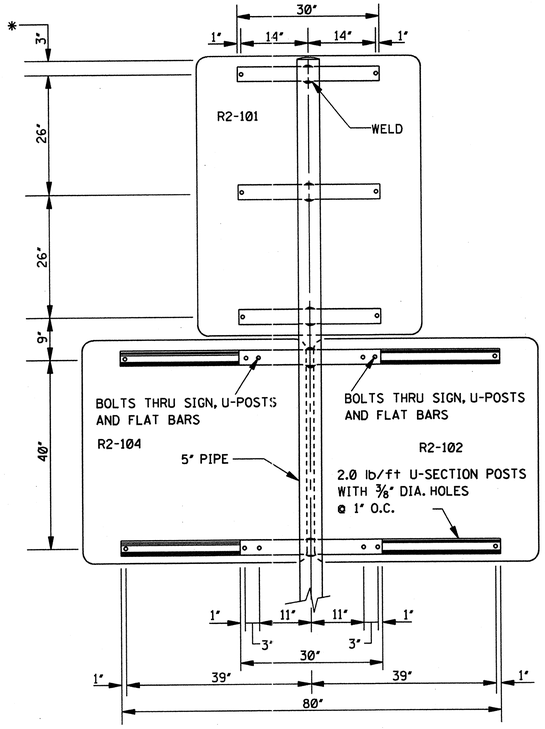

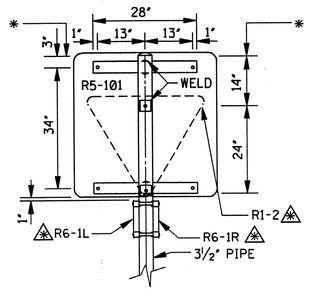

SEE PLAN VIEW BELOW
WHERE REQUIRED

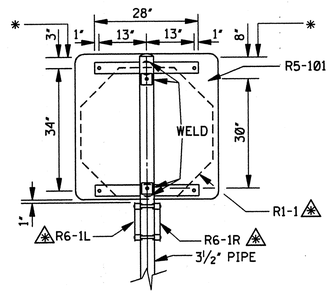

SEE PLAN VIEW BELOW
WHERE REQUIRED

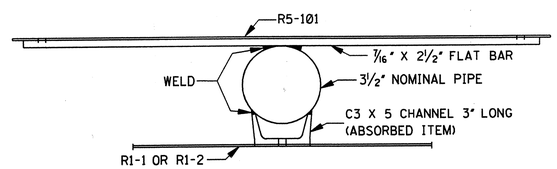

PLAN VIEW OF DOUBLE MOUNTING OF SIGNS

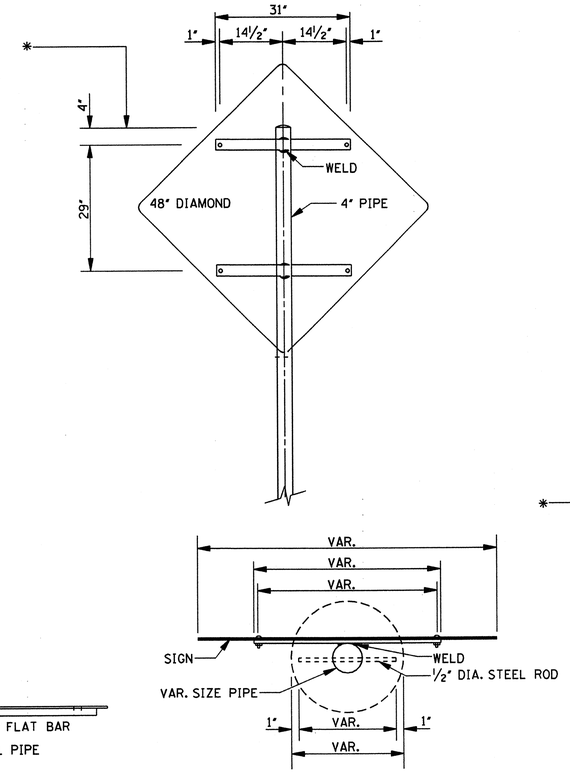

TYPICAL PLAN VIEW

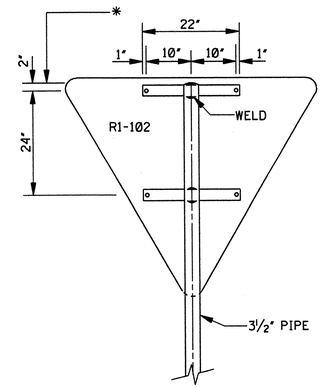

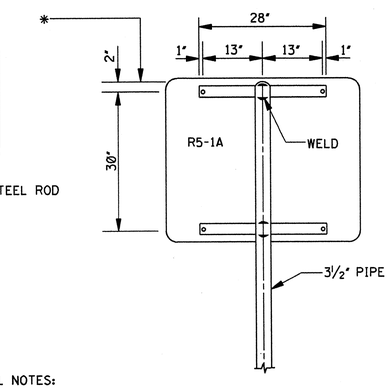

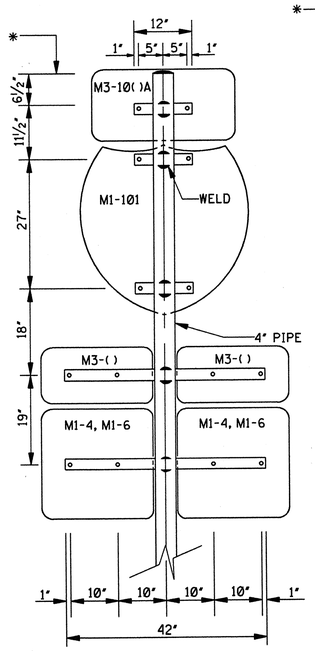

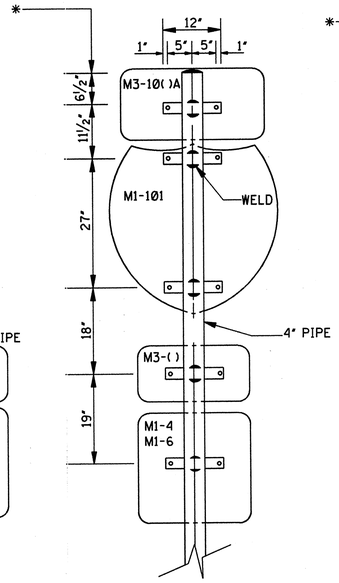

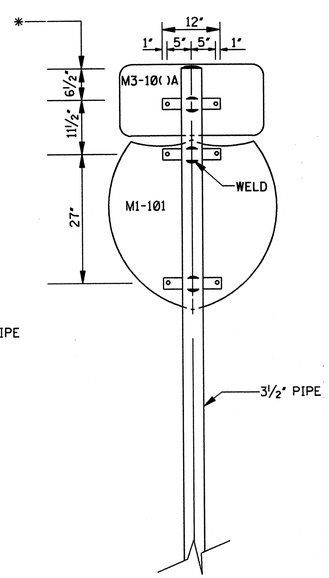

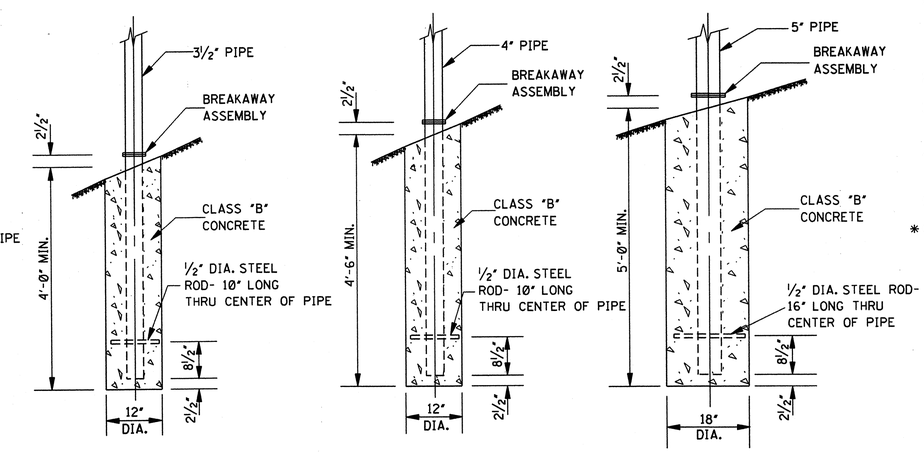

FOOTING DETAILS

GENERAL NOTES:

1. UNLESS OTHERWISE SPECIFIED, HORIZONTAL BRACES ARE 7/16" X 2 1/2" X VARIABLE LENGTH FLAT STEEL BARS. BARS ARE WELDED TO PIPE AS SHOWN. WHEN FABRICATION IS COMPLETE, POSTS SHALL BE GALVANIZED AS PER SECTION 630 OF THE STANDARD SPECIFICATION.
2. HOLES IN FLAT BARS ARE 3/8" DIAMETER.
3. SIGNS ARE FASTENED TO THE FLAT BARS AND U-SECTION POSTS WITH M8 BOLTS WITH FLAT WASHERS AND LOCK NUTS.
4. WHERE REQUIRED, SIGNS R6-1L AND R6-1R ARE TO BE MOUNTED ON PIPES WITH CLAMPS OR BUCKLE BRACKETS (NOT A PAY ITEM).
5. ALL WELDS SHALL BE 3/16" FILLET.

* 6. TOP OF POST

DATE	REVISION	BY

MISSISSIPPI DEPARTMENT OF TRANSPORTATION
ROADWAY DESIGN DIVISION
STANDARD PLAN

STANDARD ROADSIDE SIGN ASSEMBLY AND INSTALLATION

ENGLISH

WORKING NUMBER
SN-4B

ISSUE DATE: OCTOBER 1, 1998

SHEET NUMBER
227

STATE	PROJECT NO.
MISS.	

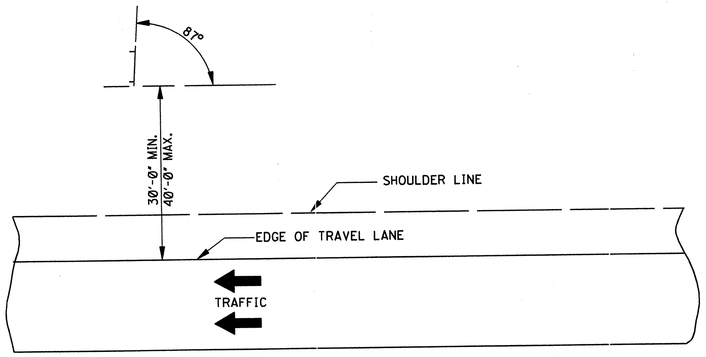

ALINEMENT OF SIGNS FOR TANGENT SECTIONS

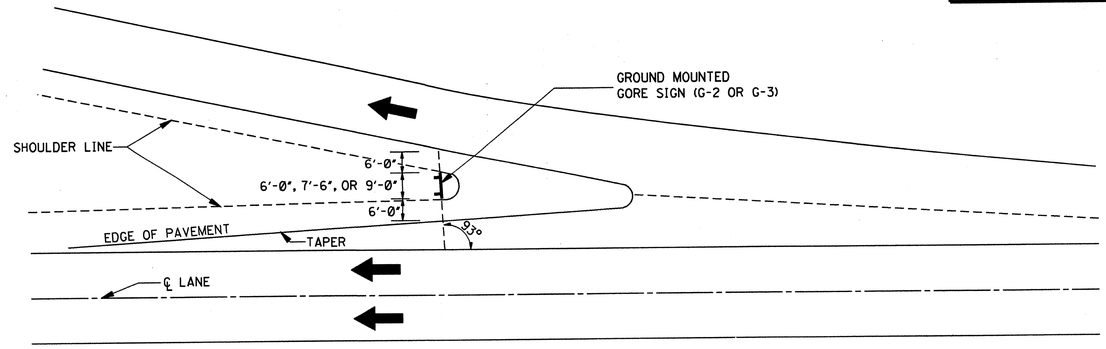

TYPICAL INSTALLATION OF GROUND MOUNTED GORE SIGN (G-2 OR G-3)

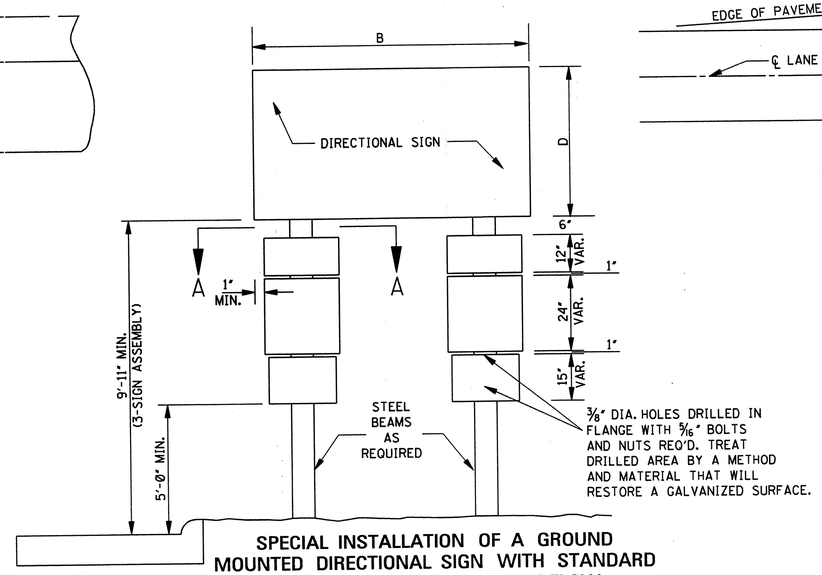

SPECIAL INSTALLATION OF A GROUND MOUNTED DIRECTIONAL SIGN WITH STANDARD ROADSIDE SIGNS MOUNTED BELOW

NOTE: BEFORE FINAL PLACEMENT OF SIGNS IN SHARP CURVE SECTIONS (AS IN THE CASE OF INTERCHANGE LOOPS AND RAMPS), THE SIGN SHALL BE INSPECTED BY THE ENGINEER AT NIGHT TO INSURE PROPER REFLECTORIZATION OF THE SIGN. IT MAY THEN BE NECESSARY TO ADJUST THE ALINEMENT OF THE SIGN (I.E., ORIENT THE SIGN FACE) TO AVOID OR MINIMIZE SPECULAR REFLECTION. THIS ADJUSTMENT SHOULD BE MADE WITH CARE AND UNDER THE DIRECTION OF THE ENGINEER.

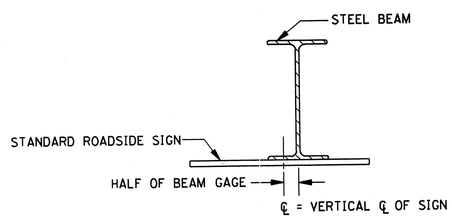

SECTION A–A

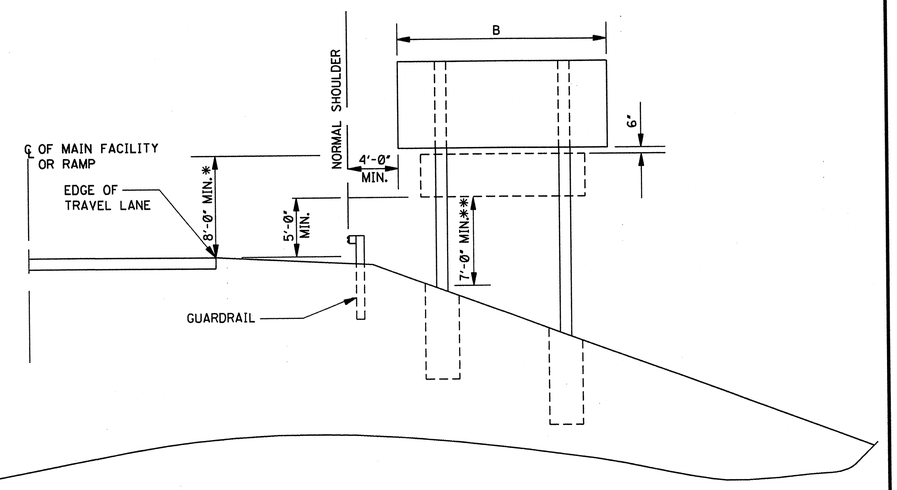

TYPICAL INSTALLATION IN A FILL SECTION PROTECTED BY GUARDRAIL

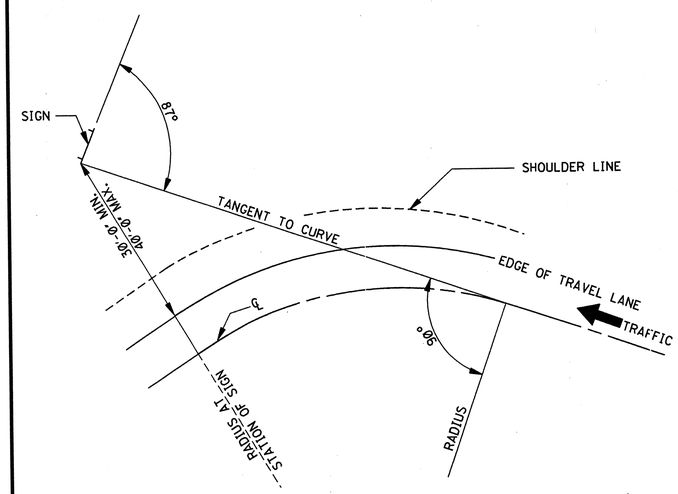

ALINEMENT OF SIGN FOR CURVED SECTION

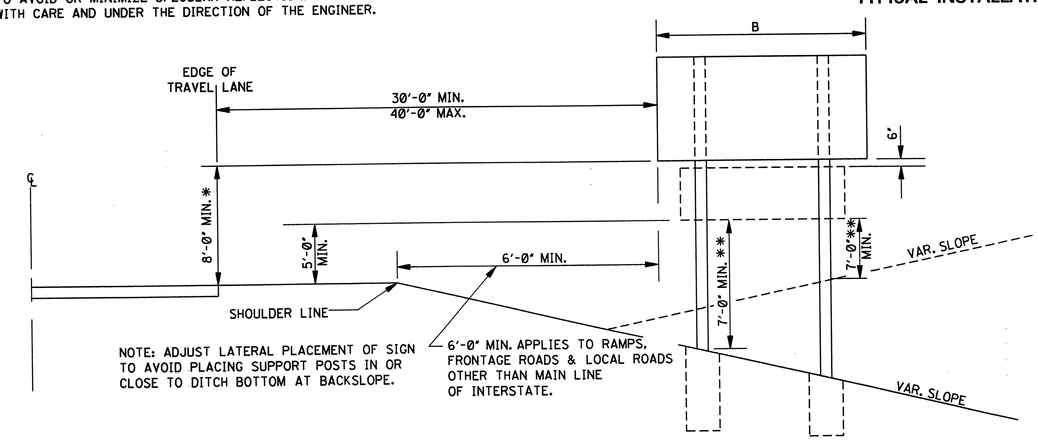

NOTE: ADJUST LATERAL PLACEMENT OF SIGN TO AVOID PLACING SUPPORT POSTS IN OR CLOSE TO DITCH BOTTOM AT BACKSLOPE.

6'-0" MIN. APPLIES TO RAMPS, FRONTAGE ROADS & LOCAL ROADS OTHER THAN MAIN LINE OF INTERSTATE.

TYPCIAL INSTALLATION IN A CUT OR FILL SECTION

GENERAL NOTES:

* 1. 7'-0" MIN. WHERE THERE IS NO SUPPLEMENTARY SIGN (5'-0" MIN. WHERE NEAR EDGE OF SIGN IS 30'-0" OR MORE FROM PAVEMENT EDGE).

** 2. 7'-0" MINIMUM FROM GROUND TO BOTTOM EDGE OF LOWEST SIGN (SHORTEST POST).

DATE	REVISION	BY

MISSISSIPPI DEPARTMENT OF TRANSPORTATION
ROADWAY DESIGN DIVISION
STANDARD PLAN

TYPICAL INSTALLATION OF GROUND MOUNTED DIRECTIONAL SIGNS

DEPARTMENT OF TRANSPORTATION MISSISSIPPI ENGLISH

WORKING NUMBER SN-5

ISSUE DATE: OCTOBER 1, 1998

SHEET NUMBER 228

STATE	PROJECT NO.
MISS.	

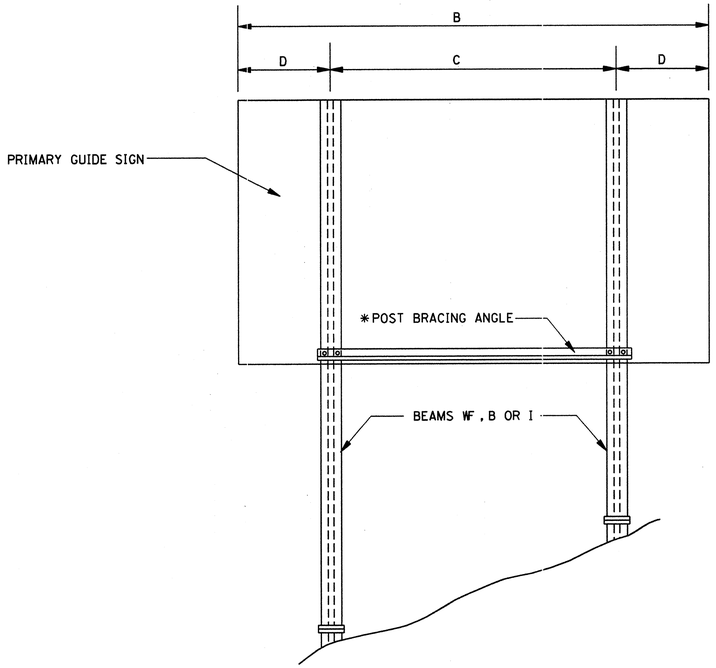

TYPICAL 2–POST INSTALLATION WITHOUT EXIT SIGN

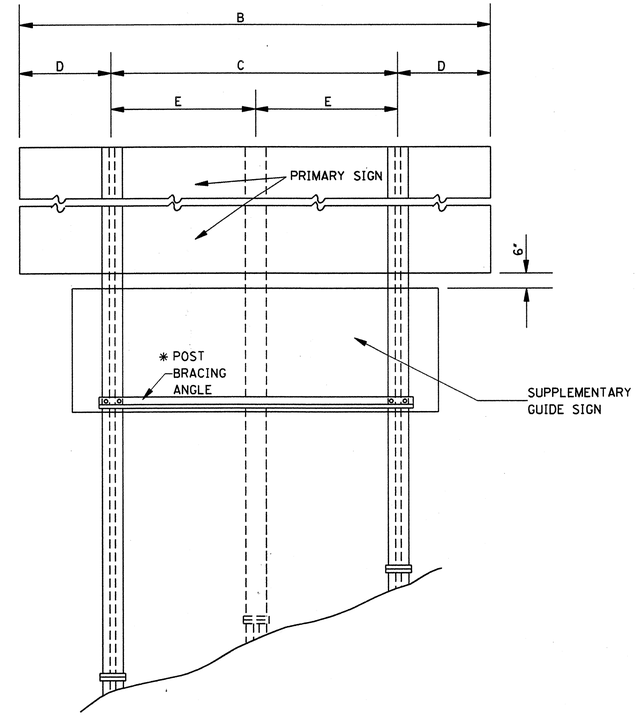

TYPICAL 2 OR 3 POST INSTALLATION WITH SUPPLEMENTARY GUIDE SIGN AND POST BRACING ANGLE LOCATION

* NOTE: PLACE POST BRACING ANGLE AT BOTTOM OF PRIMARY OR SUPPLEMENTARY SIGN WHICHEVER IS LOWER. (SEE "END ELEVATION OF POST AND FOOTING" ON SN-6A.)

SIGN POST SPACING TABLE

2 POST			2 POST (CONT'D)			3 POST			
"B"	"C"	"D"	"B"	"C"	"D"	"B"	"C"	"D"	"E"
4'-0"	2'-0"	1'-0"	14'-6"	8'-9"	2'-10½"	20'-0"	14'-0"	3'-0"	7'-0"
4'-6"	2'-6"	1'-0"	15'-0"	9'-0"	3'-0"	20'-6"	14'-3"	3'-1½"	7'-1½"
5'-0"	3'-0"	1'-0"	15'-6"	9'-3"	3'-1½"	21'-0"	14'-9"	3'-1½"	7'-4½"
5'-6"	3'-6"	1'-0"	16'-0"	9'-6"	3'-3"	21'-6"	15'-0"	3'-3"	7'-6"
6'-0"	4'-0"	1'-0"	16'-6"	10'-0"	3'-3"	22'-0"	15'-6"	3'-3"	7'-9"
6'-6"	4'-6"	1'-0"	17'-0"	10'-3"	3'-4½"	22'-6"	15'-9"	3'-4½"	7'-10½"
7'-0"	5'-0"	1'-0"	17'-6"	10'-6"	3'-6"	23'-0"	16'-0"	3'-6"	8'-0"
7'-6"	5'-6"	1'-0"	18'-0"	10'-9"	3'-7½"	23'-6"	16'-6"	3'-6"	8'-3"
8'-0"	6'-0"	1'-0"	18'-6"	11'-0"	3'-9"	24'-0"	16'-9"	3'-7½"	8'-4½"
8'-6"	6'-6"	1'-0"	19'-0"	11'-6"	3'-9"	24'-6"	17'-3"	3'-7½"	8'- 7½"
9'-0"	7'-0"	1'-0"	19'-6"	11'-9"	3'-10½"	25'-0"	17'-6"	3'-9"	8'-9"
9'-6"	7'-0"	1'-3"	20'-0"	12'-0"	4'-0"	25'-6"	17'-9"	3'-10½"	8'-10½"
10'-0"	7'-0"	1'-6"	20'-6"	12'-3"	4'-1½"	26'-0"	18'-3"	3'-10½"	9'-1½"
10'-6"	7'-0"	1'-9"	21'-0"	12'-6"	4'-3"	26'-6"	18'-6"	4'-0"	9'-3"
11'-0"	7'-0"	2'-0"	21'-6"	13'-0"	4'-3"	27'-0"	19'-0"	4'-0"	9'-6"
11'-6"	7'-0"	2'-3"	22'-0"	13'-3"	4'-4½"	27'-6"	19'-3"	4'-1½"	9'-7½"
12'-0"	7'-3"	2'-4½"	22'-6"	13'-6"	4'-6"	28'-0"	19'-6"	4'-3"	9'-9"
12'-6"	7'-6"	2'-6"	23'-0"	13'-9"	4'-7½"	28'-6"	20'-0"	4'-3"	10'-0"
13'-0"	7'-9"	2'-7½"	23'-6"	14'-0"	4'-9"	29'-0"	20'-3"	4'-4½"	10'-1½"
13'-6"	8'-0"	2'-9"	24'-0"	14'-6"	4'-9"	29'-6"	20'-6"	4'-6"	10'-3"
14'-0"	8'-6"	2'-9"				30'-0"	21'-0"	4'-6"	10'-6"

GENERAL NOTES FOR WORKING SHEETS SN-6, SN-6A AND SN-6B:

1. FOOTING
   ALL FOOTINGS SHALL BE CLASS "B" CONCRETE. POST STUBS SHALL BE SET IN CONCRETE FOOTING AT REQUIRED GRADE AND ALIGNMENT WITH CARE SO THAT MINIMUM SHIMMING WILL BE REQUIRED.

2. BASE CONNECTION PROCEDURE
   ASSEMBLE POST TO STUB WITH BOLTS AND WITH A FLAT WASHER ON EACH BOLT BETWEEN PLATES. SHIM AS REQUIRED TO PLUMB POST. TIGHTEN ALL BOLTS THE MAXIMUM POSSIBLE WITH A 12" TO 15" WRENCH TO BED WASHERS AND SHIMS AND TO CLEAN BOLT THREADS. THEN LOOSEN EACH BOLT IN TURN AND RETIGHTEN IN A SYSTEMATIC ORDER TO THE PRESCRIBED TORQUE AS SHOWN BY TABLE. BURR THREADS AT JUNCTION WITH NUT USING A CENTER PUNCH. HIGH STRENGTH BOLTS IN BASE CONNECTIONS SHALL BE TIGHTENED TO TORQUE AS SHOWN BY TABLE ON SN-6A. DO NOT OVER TIGHTEN!

3. POST LENGTH
   ALL POST LENGTHS SHALL BE VERIFIED AND APPROVED BY THE ENGINEER PRIOR TO FABRICATION. WHERE FIELD CONDITIONS REQUIRE THE POST LENGTH TO VARY MORE THAN 12", IT MAY BE NECESSARY TO CHANGE THE SIZE OR NUMBER OF POSTS. SUCH DETERMINATION WILL BE MADE BY THE ROADWAY DESIGN ENGINEER. ANY CHANGE OF SIZE OR NUMBER OF POSTS SHALL NOT BE JUSTIFICATION FOR ANY CONTRACT PRICE ADJUSTMENTS.

4. FABRICATOR NOTE
   IMPORTANT- ALL FRICTION FUSE BOLTS SHALL BE TIGHTENED IN SHOP BY A METHOD APPROVED BY THE BRIDGE DESIGN ENGINEER. TIGHTENING SHALL BE TO SUCH A DEGREE AS TO PROVIDE THE MINIMUM TENSION IN EACH BOLT WHEN ALL BOLTS ARE TIGHT, AS SHOWN BY TABLE SN-6A.

5. ALL HOLES IN FUSE PLATES AND HINGE PLATES SHALL BE DRILLED.

6. ALL PLATE CUTS SHALL PREFERABLY BE SAW CUTS. FLAME CUTTING WILL BE PERMITTED PROVIDED ALL EDGES ARE GROUND. METAL PROJECTING BEYOND THE PLANE OF THE PLATE FACE WILL NOT BE ACCEPTABLE.

7. WELDING FOR STEEL SIGN SUPPORTS
   WELDING SHALL BE PERFORMED IN SHOP BY ELECTRIC ARC PROCESS.

8. MATERIAL SPECIFICATIONS
   THE MATERIALS USED IN THE CONSTRUCTION OF THE GROUND MOUNTED SIGN SUPPORT STRUCTURES, AS LISTED BELOW, SHALL CONFORM WITH THE REQUIREMENTS OF THE DESIGNATED ASTM SPECIFICATION. ALL OTHER MATERIALS, FABRICATION AND ERECTION SHALL BE IN ACCORDANCE WITH THE REQUIREMENTS OF THE SPECIFICATIONS, EXCEPT AS OTHERWISE NOTED ON THE PLANS.

DESCRIPTION	MATERIALS PER ASTM DESIGNATION	GALVANIZE (1) PER ASTM DESIGNATION
POSTS OF STEEL PIPE	A 53 (GRADE "B") (2)	A 53
BASE CONNECTION PLATES FOR PIPES	A 36	A 123
POSTS OF STEEL WF, B, AND I BEAMS INCLUDING BASE CONNECTION, FUSE AND HINGE PLATES	A 588 OR A 572 GRADE 50	A 123
POST BRACING ANGLES AND FLAT BARS USED IN FABRICATION AND ERECTION OF SIGN SUPPORTS	A 36	A 123
HIGH STRENGTH BOLTS, NUTS AND WASHERS	A 325	A 153
BOLTS OTHER THAN HIGH STRENGTH (3)	A 307 (GRADE "A")	A 153

(1) ALL STEEL SHALL BE GALVANIZED AFTER FABRICATION EXCEPT AS NOTED ON THE PLANS.
(2) PIPES MAY BE WELDED OR SEAMLESS.
(3) BOLTS, WASHERS, AND NUTS USED FOR FASTENING ALUMINUM SIGN SHEETS AND PANELS SHALL BE ALUMINUM AS PER FOLLOWING TABLE.

DESCRIPTION	ASTM DESIGNATION	ALLOY
BOLTS AND WASHERS	B 209	2024-T4
PANEL BOLT NUTS	B 211	6061-T6
STOP NUTS	B 211	2017-T4

DATE	REVISION	BY

MISSISSIPPI DEPARTMENT OF TRANSPORTATION
ROADWAY DESIGN DIVISION
STANDARD PLAN

BREAKAWAY SIGN SUPPORTS

ENGLISH

WORKING NUMBER SN-6

SHEET NUMBER 229

ISSUE DATE: OCTOBER 1, 1998

STATE	PROJECT NO.
MISS.	

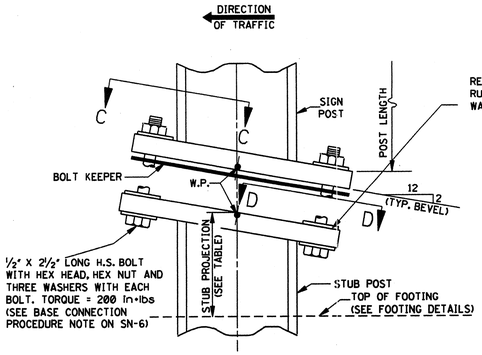

BASE CONNECTION DETAILS FOR S3 X 5.7 AND S4 X 7.7 SHAPED POSTS

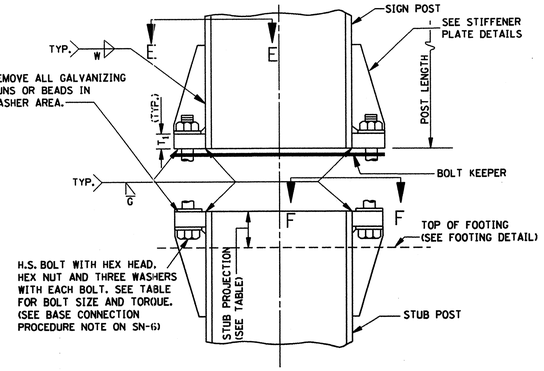

BASE CONNECTION DETAILS FOR W SHAPED POSTS

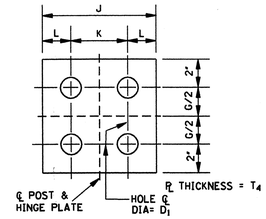

HINGE PLATE

NOTE: INSTALLATION SIMILAR TO DETAIL "A", FUSE PLATE.

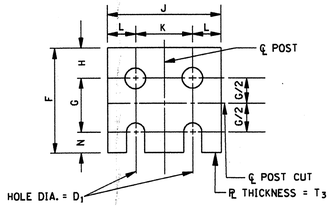

FUSE PLATE DETAIL

NOTE: SEE TABLE FOR DIMENSIONS. USE H.S. BOLTS WITH HEX HEAD, HEX NUTS, ONE FLAT WASHER UNDER EACH BOLT HEAD AND BEVEL OR FLAT WASHERS (WHERE REQUIRED) UNDER NUTS.

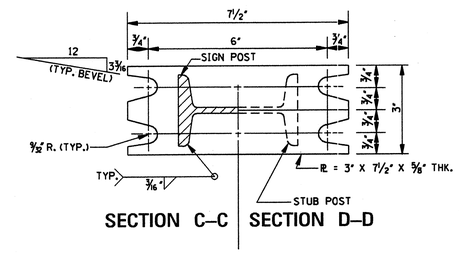

SECTION C–C SECTION D–D

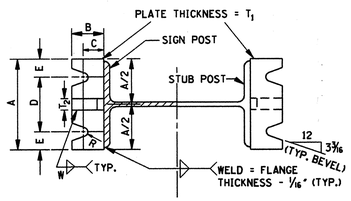

SECTION E–E SECTION F–F

NOTE: SEE TABLE FOR DIMENSIONS

NOTE: WHERE SIGN SUPPORTS MAY BE STRUCK FROM MORE THAN ONE DIRECTION, THE BASE CONNECTIONS SHALL BE LEVEL.

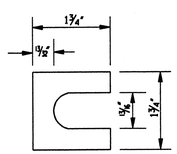

SHIM DETAIL

NOTE: FURNISH 2-0.012" ± THICK AND 2-0.032" ± THICK SHIMS PER POST. SHIMS SHALL BE FABRICATED FROM BRASS SHIM STOCK OR STRIP CONFORMING TO ASTM B 36.

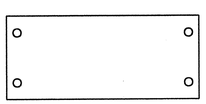

DIAGRAM OF "BOLT KEEPER"

NOTE: FABRICATED FROM 28 GAGE GALVANIZED STEEL. REQUIRED BETWEEN BASE PL AND STUB POST PL. DIMENSIONED AS REQUIRED FOR EACH INSTALLATION.

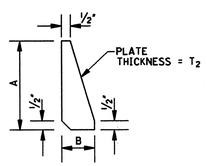

STIFFENER PLATE DETAIL

NOTE: SEE TABLE FOR DIMENSIONS

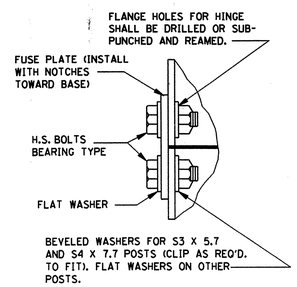

DETAIL "A", FUSE PLATE

NOTE: SEE FABRICATOR NOTE ON SN-6.

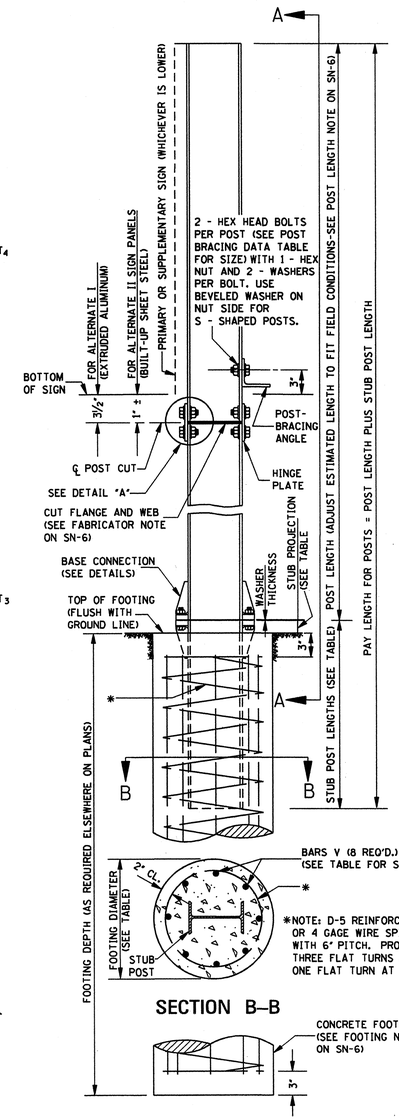

SECTION B–B

END ELEVATION OF POST AND FOOTING

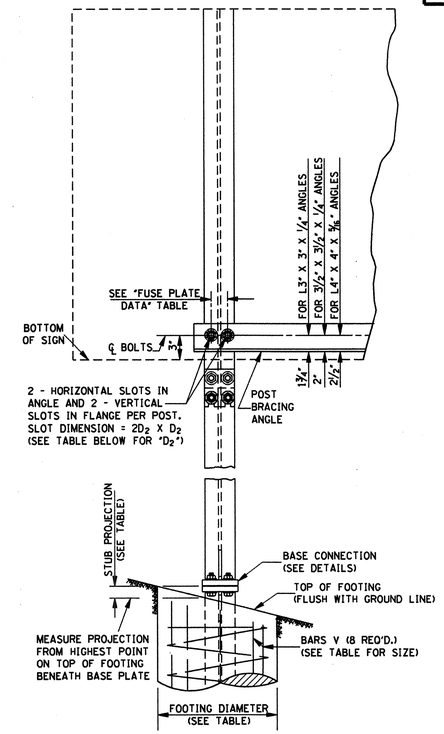

SECTION A–A

GENERAL NOTE:

1. SEE SN-6 FOR GENERAL NOTES.

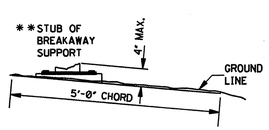

BREAKAWAY SUPPORT STUD CLEARANCE DIAGRAM

**NOTE: STUB PROJECTION SHOULD BE MEASURED OVER A 5'-0" CHORD AS PER AASHTO SPECIFICATIONS LATEST EDITION.

POST BRACING DATA

DESCRIPTION \ POST SIZE		W12 X 26 W10 X 26 W10 X 22	W8 X 21 W8 X 18 W6 X 15	W6 X 9 W6 X 12 "S" SHAPES
BOLT SIZE		7/8" X 2 1/4"	3/4" X 2"	1/2" X 1 3/4"
D_2		15/16"	13/16"	9/16"
ANGLE LENGTH		Z + 9"	Z + 8"	Z + 6"
ANGLE SIZE FOR POST SPACING OF	0-9'	L4" X 4" X 5/16"	L3 1/2" X 3 1/2" X 1/4"	L3" X 3" X 1/4"
	9'-11'	L4" X 4" X 5/16"	L3 1/2" X 3 1/2" X 1/4"	L3 1/2" X 3 1/2" X 1/4"
	11'-18'	L4" X 4" X 5/16"	L4" X 4" X 5/16"	L4" X 4" X 5/16"

NOTE: Z = DISTANCE BETWEEN ℄'S OF EXTERIOR POSTS.

BASE CONNECTION DATA

POST SIZE \ DIMENSION	BOLT SIZE & TORQUE	A	B	C	D	E	T_1	T_2	W	R
S3 X 5.7	SEE DETAIL									
S4 X 7.7	SEE DETAIL									
W6 X 9	5/8" X 2 3/4" LONG TORQUE 300 in•lbs	5"	2"	1 1/4"	2 3/4"	1 1/8"	3/4"	1/2"	1/4"	11/32"
W6 X 12										
W6 X 15										
W8 X 18										
W8 X 21	3/4" X 3 1/2" LONG TORQUE 500 in•lbs	6"	2 1/4"	1 3/8"	3 1/2"	1 1/4"	1"	3/4"	5/16"	13/32"
W10 X 22										
W10 X 26										
W12 X 26										

FUSE PLATE DATA

F	G	H	J	K	L	N	D_1	T_3	BOLT SIZE (DIA. X LENGTH)	MIN. BOLT TENSION (lbs)	T_4
3 1/8"	1 1/2"	1 1/8"	2 5/8"	1 1/2"	9/16"	1/2"	9/16"	1/4"	1/2" X 1 3/4"	12,050	1/4"
3 1/8"	1 1/2"	1 1/8"	2 5/8"	1 1/2"	9/16"	1/2"	9/16"	1/4"	1/2" X 1 3/4"	12,050	1/4"
3 5/8"	2"	1 1/8"	4"	2 1/4"	7/8"	1/2"	9/16"	1/4"	1/2" X 1 1/2"	12,050	1/4"
3 3/4"	2"	1 1/8"	4"	2 1/4"	7/8"	5/8"	11/16"	3/8"	5/8" X 2"	19,200	3/8"
4 1/2"	2 1/2"	1 1/4"	6"	3 1/2"	1 1/4"	3/4"	13/16"	1/2"	3/4" X 2 1/4"	28,400	3/8"
4 1/2"	2 1/2"	1 1/4"	5 1/4"	2 3/4"	1 1/4"	3/4"	13/16"	1/2"	3/4" X 2 1/4"	28,400	3/8"
4 7/8"	2 1/2"	1 1/2"	5 1/4"	2 3/4"	1 1/4"	7/8"	15/16"	9/16"	7/8" X 2 1/2"	39,250	3/8"
5 3/8"	3"	1 1/2"	5 3/4"	2 3/4"	1 1/2"	7/8"	15/16"	9/16"	7/8" X 2 1/2"	39,250	3/8"
5 3/8"	3"	1 1/2"	5 3/4"	2 3/4"	1 1/2"	7/8"	15/16"	9/16"	7/8" X 2 1/2"	39,250	7/16"
5 3/8"	3"	1 1/2"	6 1/2"	3 1/2"	1 1/2"	7/8"	15/16"	9/16"	7/8" X 2 1/2"	39,250	3/8"

FOOTING DATA

STUB LENGTH	STUB** PROJECTION	FOOTING DIAMETER	BARS V SIZE	DIMENSION / POST SIZE
1'-6"	3 1/2"	1'-6"	#4	S3 X 5.7
1'-6"	3 1/2"	1'-6"	#4	S4 X 7.7
2'-0"	3"	2'-0"	#4	W6 X 9
2'-0"	3"	2'-0"	#5	W6 X 12
2'-6"	3"	2'-0"	#6	W6 X 15
2'-6"	3"	2'-0"	#7	W8 X 18
3'-0"	2 1/2"	2'-0"	#8	W8 X 21
3'-0"	2 1/2"	2'-0"	#9	W10 X 22
3'-0"	2 1/2"	2'-0"	#10	W10 X 26
3'-0"	2 1/2"	2'-0"	#11	W12 X 26

DATE	REVISION	BY

MISSISSIPPI DEPARTMENT OF TRANSPORTATION
ROADWAY DESIGN DIVISION
STANDARD PLAN

BREAKAWAY SIGN SUPPORTS

ENGLISH

WORKING NUMBER SN-6A

SHEET NUMBER 230

ISSUE DATE: OCTOBER 1, 1998

STATE	PROJECT NO.
MISS.	

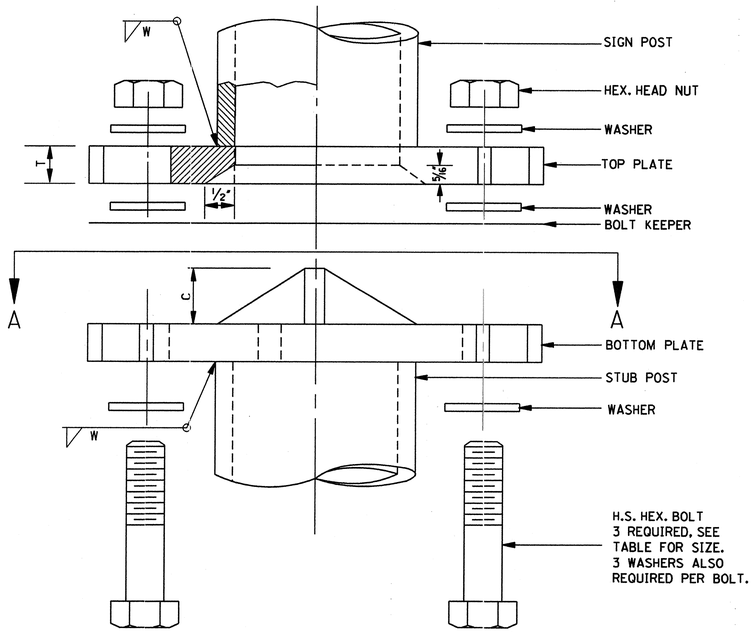

MULTI-DIRECTIONAL SIGN POST & STUB POST

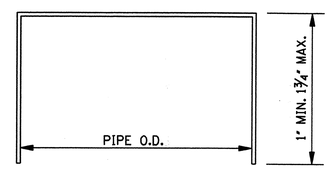

FRICTION CAP DETAIL

NOTE: SEE NOTE 3

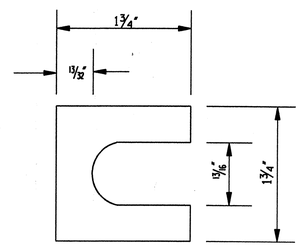

SHIM DETAIL

NOTE: FURNISH 2-0.012" ± THICK AND 2-0.032" ± THICK SHIMS PER POST. SHIMS SHALL BE FABRICATED FROM BRASS SHIM STOCK OR STRIP CONFORMING TO ASTM B 36.

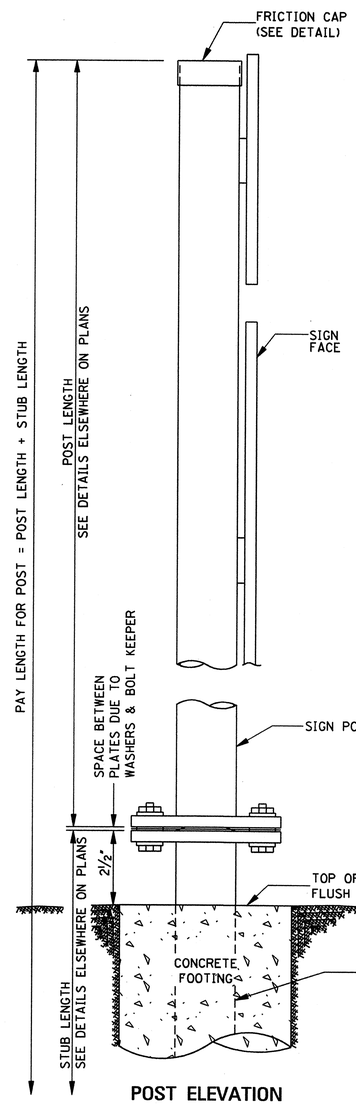

POST ELEVATION

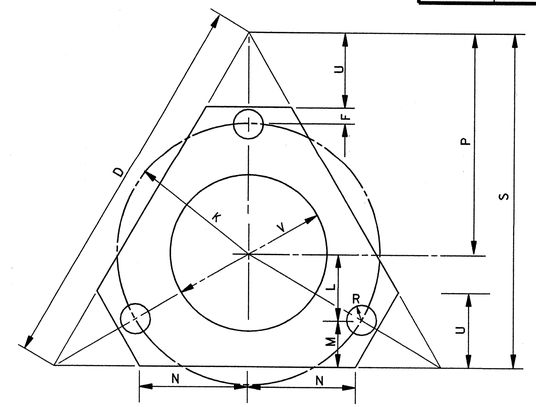

BOLT KEEPER PLATE DETAIL

NOTE: TO BE FABRICATED FROM 28 GAGE THICK GALVANIZED STEEL. TO BE INSTALLED AS SHOWN IN DETAIL AT UPPER LEFT.

GENERAL NOTES: (SEE SN-6 FOR ADDITIONAL GENERAL NOTES)

1. THE TOP PLATE OF THE TRIANGULAR SLIP BASE SHALL HAVE THE SAME EXTERIOR DIMENSIONS AS THE BOTTOM PLATE. THE LIFTING CONE SHALL BE WELDED TO THE BOTTOM PLATE ONLY. A HOLE EQUAL TO THE INSIDE DIAMETER OF THE SIGN POST SHALL BE CUT THROUGH THE CENTER OF THE TOP PLATE WITH THE HOLE EDGE BEVELED AS DETAILED. TOP & BOTTOM PLATES SHALL BE SYMMETRICAL FOR THE PURPOSE OF ASSEMBLY IN ANY POSITION.

2. BASE CONNECTION ASSEMBLY AS FOLLOWS:
   - A. ASSEMBLE POST TO STUB WITH 3 BOLTS AND WITH 3 FLAT WASHERS PER BOLT.
   - B. SHIM AS REQUIRED TO PLUMB POST.
   - C. TIGHTEN ALL BOLTS THE MAXIMUM POSSIBLE WITH A 12" TO 15" WRENCH TO BED WASHERS, KEEPER PLATE, SHIMS AND TO CLEAN THREADS.
   - D. LOOSEN EACH BOLT IN TURN & RETIGHTEN IN A SYSTEMATIC ORDER TO PRESCRIBED TORQUE. (SEE BASE CONNECTION DATA TABLE).
   - E. BURR THREADS AT JUNCTION WITH NUT WITH A CENTER PUNCH TO PREVENT NUT FROM LOOSENING.

3. FRICTION CAPS TO BE MANUFACTURED FROM HOT ROLLED OR COLD ROLLED STEEL SHEETS. FOR ALL PIPE SIZES, MINIMUM THICKNESS SHALL BE 20 GAGE SHEET METAL. RIM EDGES SHALL BE REASONABLY STRAIGHT AND SMOOTH. CAPS SHALL BE SIZED AND FORMED IN SUCH A MANNER AS TO PROVIDE A DRIVE-ON FRICTION FIT AND HAVE NO TENDENCY TO ROCK WHEN SEATED ON PIPE. THE DEPTH SHALL BE SUFFICIENT TO GIVE POSITIVE PROTECTION AGAINST ENTRANCE OF RAINWATER. THEY SHALL BE FREE OF SHARP CREASES OR INDENTATIONS AND SHOW NO SIGNS OF METAL FRACTURE. ALL CAPS TO BE SAME IN SHAPE AND GENERAL APPEARANCE AS APPROVED BY THE ENGINEER.

4. STUB PROJECTION SHOULD BE MEASURED OVER A 5'-0" CHORD AS PER AASHTO SPECIFICATIONS, LATEST EDITIONS. SEE SHEET SN-6A FOR DIAGRAM.

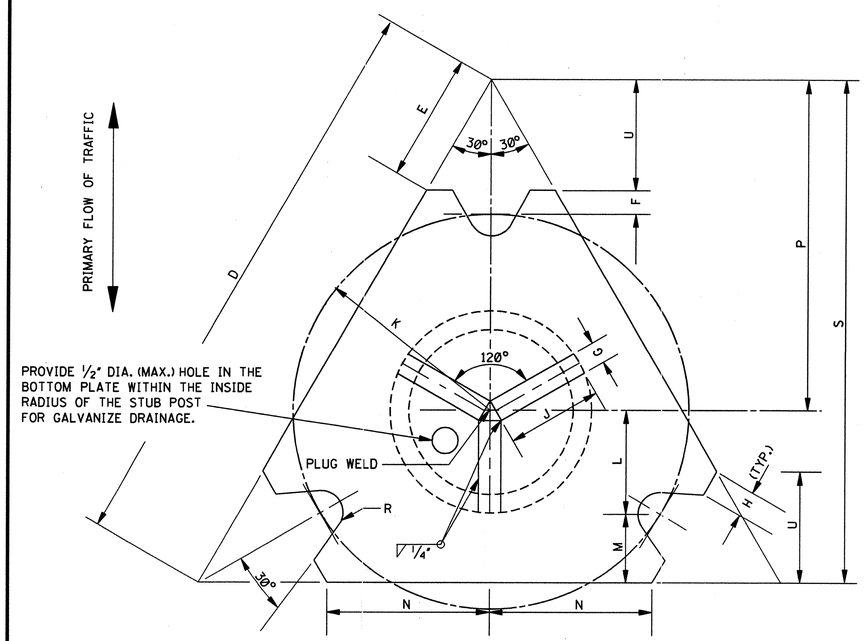

SECTION A–A

NOTE: SEE DATA TABLE FOR DIMENSIONS

BASE CONNECTION DATA TABLE

DIMENSIONS NOMINAL PIPE SIZES	BOLT SIZE & TORQUE	T	W	C	*D	*E	F	G	*H	J	K	L	M	*N	P	S	U	V	R
3" 3 1/2"	5/8" X 2 1/2" 300 in · lbs	5/8"	3/8"	1"	10 3/8"	2 5/16"	1/2"	3/8"	1/2"	1 3/4"	3 1/2"	1 3/4"	1 1/4"	2 7/8"	6"	9"	2"	4 1/4"	11/32"
4" 5"	3/4" X 3" 500 in · lbs	7/8"	7/16"	1 7/16"	13"	2 7/8"	1/2"	3/8"	5/8"	2 1/2"	4 1/2"	2 1/4"	1 1/2"	3 5/8"	7 1/2"	11 1/4"	2 1/2"	5 3/4"	13/32"

*NOTE: APPROXIMATE DIMENSIONS

DATE	REVISION	BY

MISSISSIPPI DEPARTMENT OF TRANSPORTATION
ROADWAY DESIGN DIVISION
STANDARD PLAN

BREAKAWAY SIGN SUPPORTS

ENGLISH

WORKING NUMBER SN-6B

SHEET NUMBER 231

ISSUE DATE: OCTOBER 1, 1998

STATE	PROJECT NO.
MISS.	

2′ × 8′, 0.063 GAUGE ALUMINUM FOR 2 DIGIT EXIT, ie. EXIT 47.
2′ × 10′, 0.063 GAUGE ALUMINUM FOR 3 DIGIT EXIT, ie. EXIT 47A OR EXIT 350.

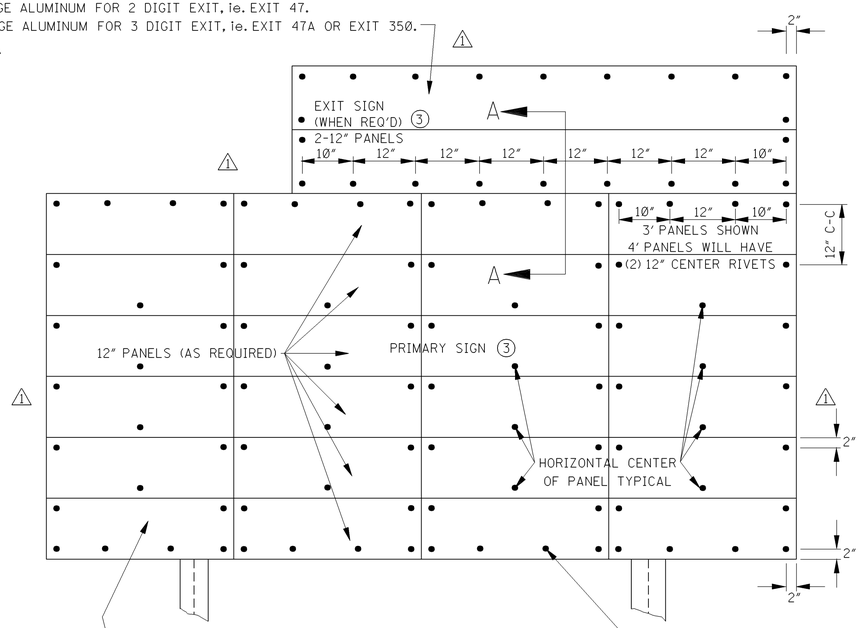

FRONT ELEVATION

3/16" × 3/8" GRIP RANGE
ALUMINUM POP RIVITS (#66)

SIGN FACE IS TO BE CONSTRUCTED OF 3′ AND 4′ 0.063 GAUGE ALUMINUM. 4′ PANELS SHOULD HAVE PRECEDENCE OVER 3′ PANELS.

EX. A 12′ WIDE SIGN = (3) 4′ PANELS.
A 15′ WIDE SIGN = (3) 4′ + (1) 3′

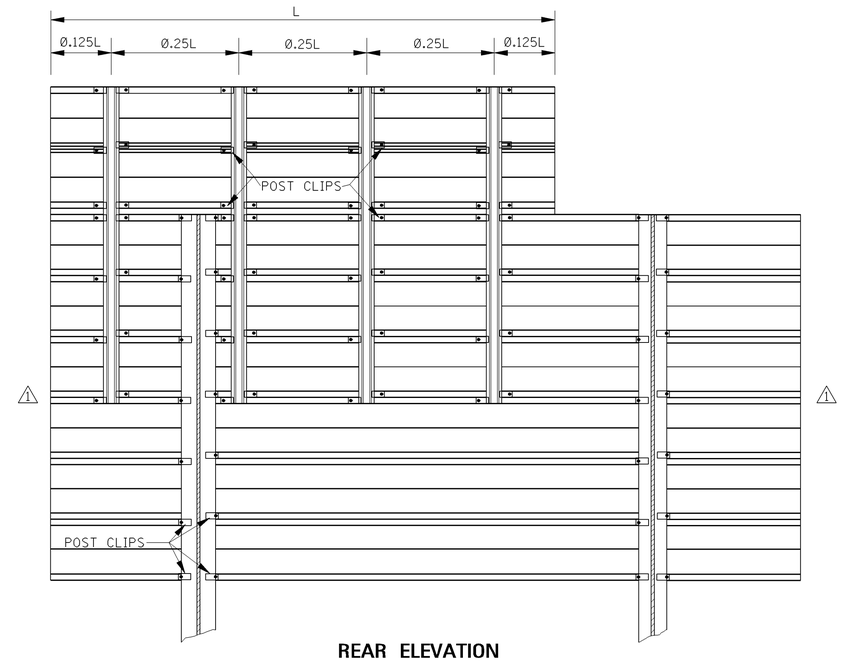

REAR ELEVATION

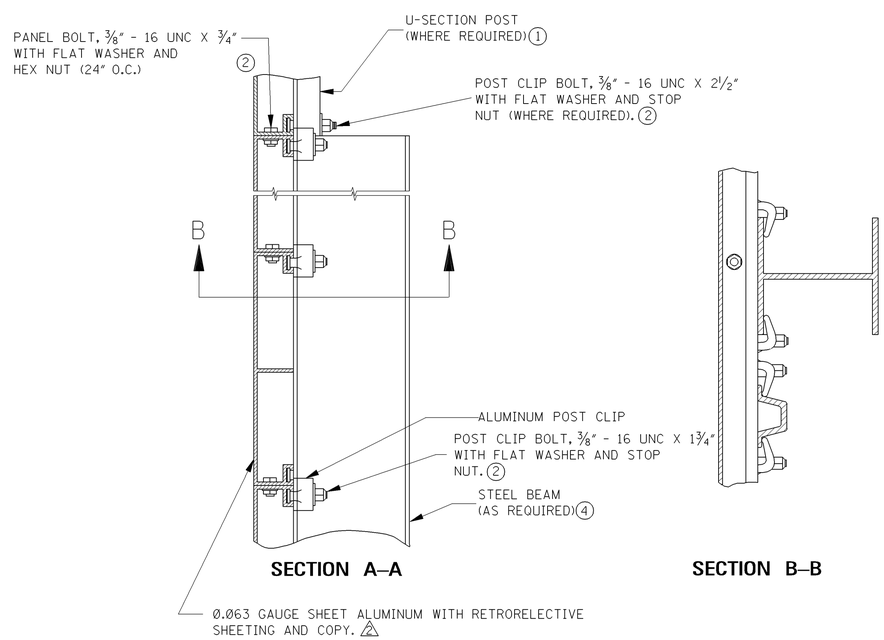

SECTION A–A

SECTION B–B

0.063 GAUGE SHEET ALUMINUM WITH RETRORELECTIVE SHEETING AND COPY.

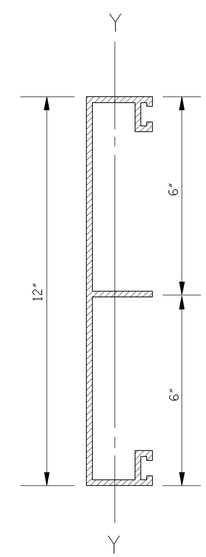

12" PANEL

NOTE: THE REQUIRED SECTION MODULUS (MINIMUM) ABOUT THE Y-Y AXIS (CENTER OF GRAVITY) IS:
12" PANELS - 0.703 in³

GENERAL NOTES:

1. EXIT SIGNS, EXCEPT AS NOTED BELOW, SHALL BE ATTACHED TO PRIMARY SIGNS WITH POST CLIPS (AS REQUIRED) AND FOUR (4) STEEL U-SECTION POSTS (2.0 lb/ft) WITH HOLES PUNCHED AS NEEDED FOR INSTALLATION. U-SECTION POST LENGTHS SHALL BE 5′-0″ FOR PRIMARY SIGNS WITH 12″ UPPER PANELS. EACH POST SHALL HAVE FOURTEEN (14) POST CLIPS - SIX (6) IN EXIT SIGN AND EIGHT (8) IN PRIMARY SIGN. WHERE NECESSARY, THE POST SPACING (SHOWN ON REAR ELEVATION) MAY BE ADJUSTED SOMEWHAT TO STAY CLEAR OF SIGN POSTS AND POST CLIPS.

2. ALL BOLTS, WASHERS AND NUTS IN THE FABRICATION OF EXTRUDED ALUMINUM SIGNS AND THE ATTACHMENT OF SAME TO STEEL BEAMS SHALL BE ALUMINUM, AS PER SPECIFICATIONS. POST CLIP BOLTS AND BOLTS FOR U-SECTION POSTS SHALL HAVE HEADS DESIGNED TO FIT THE BOLT SLOTS IN THE PANELS. THE LOCK-NUTS SHALL BE TIGHTENED ON CLEAN, DRY, "AS RECEIVED" THREADS TO A TORQUE OF 150 in • lbs.

3. UNLESS OTHERWISE SPECIFIED, THE BACKGROUND OF ALL DIRECTIONAL SIGNS (INCLUDING OVERHEAD SIGNS) SHALL BE INTERSTATE GREEN REFLECTORIZED SHEETING (AS PER STANDARD SPECIFICATIONS), DIRECT APPLIED TO 0.063 GAUGE SHEET ALUMINUM. THE COPY SHALL BE WHITE, REFLECTORIZED, DIRECT APPLIED, ADHESIVE BACKED, LETTERS, NUMBERS, SYMBOLS, AND BORDER.

4. SEE OTHER DRAWINGS FOR SELECTION AND DETAILS OF STEEL BEAMS FOR VERTICAL SUPPORTS (SIGN POST).

5. THE DETAILS OF SIGN FACE CONSTRUCTION SHOWN ON THIS SHEET ARE THE SAME FOR OVERHEAD SIGNS, BUT THE METHOD OF MOUNTING IS SHOWN ON OVERHEAD TRUSS DRAWINGS.

6. DATE OF ERECTION AND SIGN SIZE (WIDTH X HEIGHT) SHALL BE LEGIBLY WRITTEN ON THE BACK OF EACH SIGN WITH A PERMANENT GREASE MARKER.

DATE	REVISION	BY
3-01-02	ERRATA	S.W.R.
12-1-99	REVISED DRAWING	S.W.R.

MISSISSIPPI DEPARTMENT OF TRANSPORTATION
ROADWAY DESIGN DIVISION
STANDARD PLAN

SIGN FACE CONST. AND ATTACHMENT OF GROUND MOUNTED DIRECTIONAL SIGNS TO STEEL BEAMS (EXTRUDED ALUMINUM PANELS)

ENGLISH

WORKING NUMBER
SN-7

ISSUE DATE: OCTOBER 1, 1998

SHEET NUMBER
232

STATE	PROJECT NO.
MISS.	

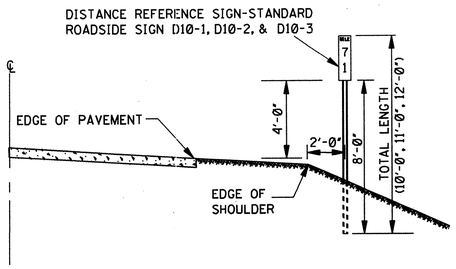

DISTANCE REFERENCE SIGN MOUNTING ON OUTSIDE SHOULDER ALONG MAIN FACILITY

NOTE: SIGN MOUNTING ON LEFT LANE SHOULDER SHALL BE 90° OPPOSITE THE RIGHT LANE STATION. IF CONDITIONS ARE SUCH THAT MILE SIGN CANNOT BE LOCATED WITHIN 50 FEET OF ITS TRUE LOCATION, IT SHALL BE OMITTED ENTIRELY.

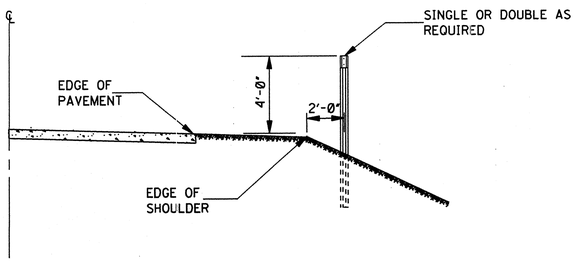

DELINEATOR MOUNTING ON OUTSIDE SHOULDER ALONG MAIN FACILITY OR RAMP

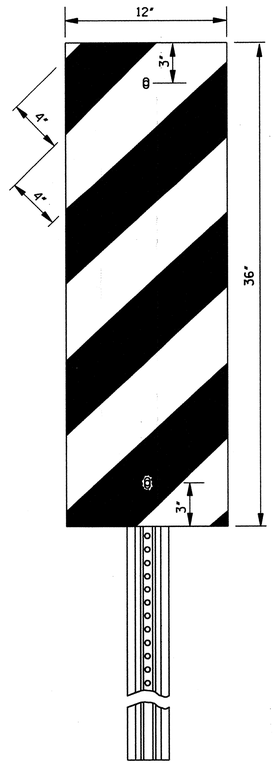

DETAIL OF TYPE 3 OBJECT MARKER

NOTE: COLORS- BLACK AND YELLOW. STRIPING SHOWN ABOVE FOR RIGHT SIDE ONLY. STRIPES SLANT DOWNWARD TO THE RIGHT FOR LEFT SIDE OF BRIDGE END. SEE DETAIL BELOW.

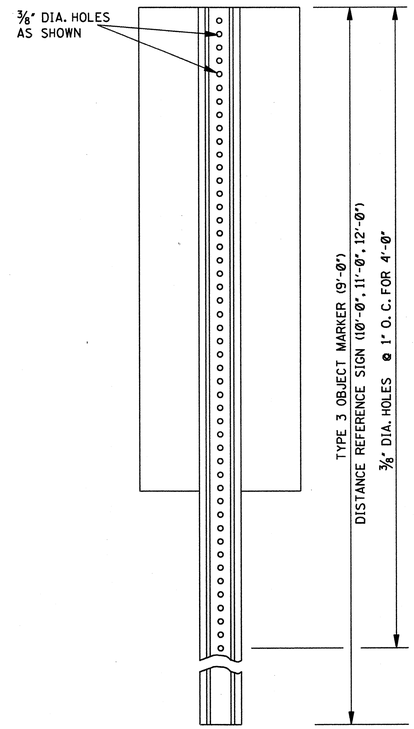

REAR VIEW OF TYPE 3 OBJECT MARKER OR DISTANCE REFERENCE SIGN ASSEMBLY

NOTE: TYPE 3 OBJECT MARKER AND DISTANCE REFERENCE SIGNS ARE TO BE FASTENED TO U-SECTION POSTS WITH 5/16" DIA. HUCK FASTENERS OR CHERRY RIVETS OF THE COLLAR TYPE OR OTHER APPROVED EQUAL.

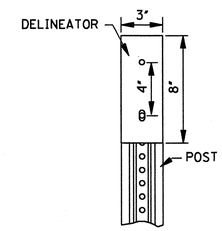

DETAIL OF SINGLE WHITE OR SINGLE YELLOW DELINEATOR

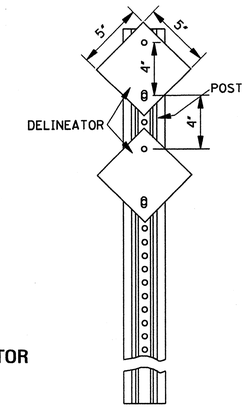

DETAIL OF DOUBLE WHITE OR DOUBLE YELLOW DELINEATOR

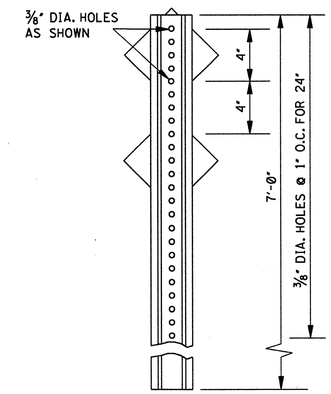

REAR VIEW OF DELINEATOR ASSEMBLY

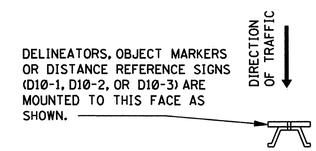

MOUNTING DETAIL

NOTE: DELINEATORS ARE TO BE FASTENED TO U-SECTION POSTS WITH 1/4" DIA. HUCK FASTENERS OR CHERRY RIVETS OF THE COLLAR TYPE OR OTHER APPROVED EQUAL.

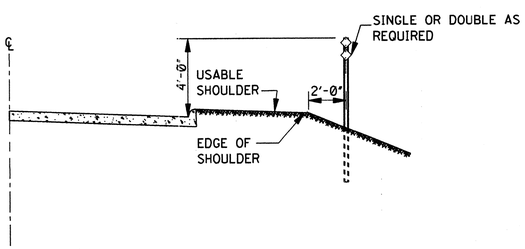

DELINEATOR MOUNTING ON OUTSIDE SHOULDER WITH MOUNTABLE CURB ALONG MAIN FACILITY OR RAMP

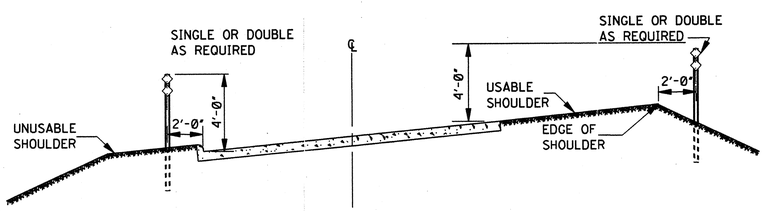

DELINEATOR MOUNTING ON INTERCHANGE LOOPS WITH UNMOUNTABLE CURB ON INSIDE

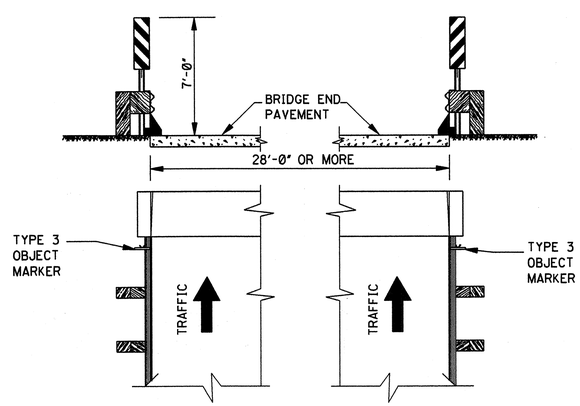

DETAIL OF TYPE 3 OBJECT MARKER INSTALLATION

GENERAL NOTES:

1. DELINEATORS AND TYPE 3 OBJECT MARKER SHALL BE REFLECTIVE SHEETING ON 0.080" THICK ALUMINUM SHEET OR 14 GAGE GALVANIZED SHEET STEEL.
2. DELINEATOR, TYPE 3 OBJECT MARKER AND DISTANCE REFERENCE SIGN POSTS SHALL BE GALVANIZED STEEL. THE POSTS ARE TO BE FABRICATED BEFORE THE METAL IS GALVANIZED.
3. WEIGHT WITHOUT GROUND PLATES:
   A. DELINEATOR POST 7'-0" - 2.0 lb/ft TO 2.5 lb/ft
   B. TYPE 3 OBJECT MARKER POST 9'-0" - 2.5 lb/ft TO 3.0 lb/ft
   C. DISTANCE REFERENCE SIGN POST 10'-0", 11'-0", & 12'-0" - 3.0 lb/ft TO 3.5 lb/ft
4. UNIT PRICE OF DELINEATORS AND TYPE 3 OBJECT MARKERS SHALL INCLUDE COST OF POST. DISTANCE REFERENCE SIGN POST WILL BE PAID FOR PER FOOT.
5. RADIUS IN BENDS OF POST CROSS SECTION NOT TO EXCEED 13/32" FOR HOT ROLLED SECTION.
6. GROUND PLATE NOT REQUIRED ON U-SECTION POST.

DATE	REVISION	BY

MISSISSIPPI DEPARTMENT OF TRANSPORTATION
ROADWAY DESIGN DIVISION
STANDARD PLAN

TYPICAL INSTALLATION AND DETAILS OF DELINEATORS AND DISTANCE REFERENCE SIGNS

ENGLISH

WORKING NUMBER
SN-8

ISSUE DATE: OCTOBER 1, 1998

SHEET NUMBER
233

STATE	PROJECT NO.
MISS.	

LEGEND	
SYMBOL	DESCRIPTION
○	SINGLE WHITE DELINEATOR
△	DOUBLE WHITE DELINEATOR
●	SINGLE YELLOW DELINEATOR
▲	DOUBLE YELLOW DELINEATOR
⬢	TYPE 3 OBJECT MARKER

GENERAL NOTES:

1. SEE INDIVIDUAL PLAN SHEETS FOR DELINEATOR LAYOUT WITHIN EACH INTERCHANGE AREA.
2. DELINEATORS ALONG HORIZONTAL CURVES ON THE MAIN FACILITY ARE TO BE PLACED ACCORDING TO THIS DRAWING (WHICH INCLUDES THE TABLE). DELINEATORS ARE NOT REQUIRED ON TANGENT SECTIONS OF MAIN FACILITY OUTSIDE OF INTERCHANGE AREAS.
3. DELINEATORS IN ALL CURBED GORES AND AT TYPE 3 OBJECT MARKERS SHOULD BE TRANSITIONED IN A SMOOTH STRAIGHT LINE FROM THE STANDARD SHOULDER OFFSET TO THE REQUIRED CLEARANCE FOR A MINIMUM OF TWO SPACES.

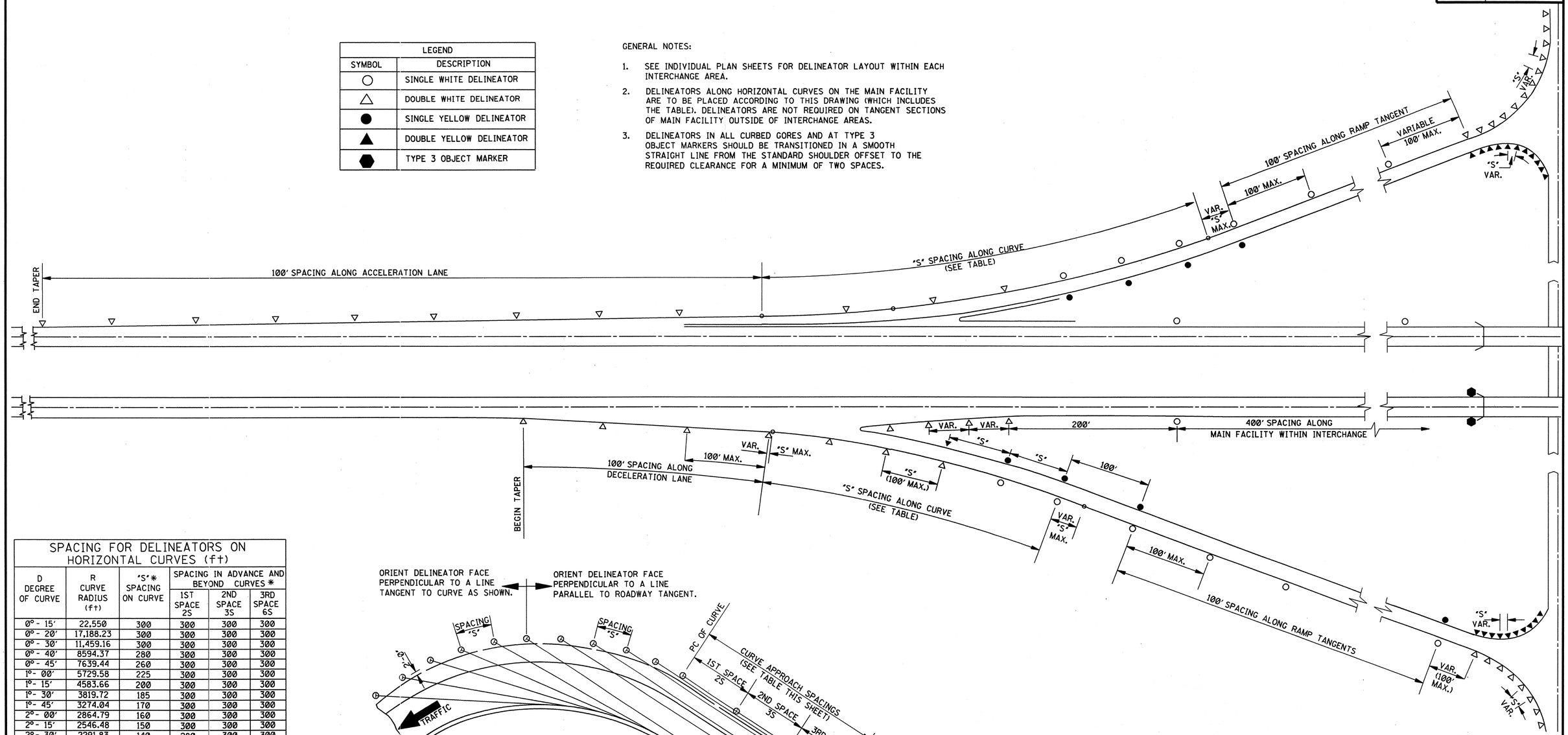

SPACING FOR DELINEATORS ON HORIZONTAL CURVES (ft)					
D DEGREE OF CURVE	R CURVE RADIUS (ft)	"S"* SPACING ON CURVE	SPACING IN ADVANCE AND BEYOND CURVES *		
			1ST SPACE 2S	2ND SPACE 3S	3RD SPACE 6S
0° - 15′	22,550	300	300	300	300
0° - 20′	17,188.23	300	300	300	300
0° - 30′	11,459.16	300	300	300	300
0° - 40′	8594.37	280	300	300	300
0° - 45′	7639.44	260	300	300	300
1° - 00′	5729.58	225	300	300	300
1° - 15′	4583.66	200	300	300	300
1° - 30′	3819.72	185	300	300	300
1° - 45′	3274.04	170	300	300	300
2° - 00′	2864.79	160	300	300	300
2° - 15′	2546.48	150	300	300	300
2° - 30′	2291.83	140	280	300	300
2° - 45′	2083.48	135	270	300	300
3° - 00′	1909.86	130	260	300	300
3° - 30′	1637.02	120	240	300	300
4° - 00′	1432.39	110	220	300	300
6° - 00′	954.93	90	180	270	300
8° - 00′	716.20	75	150	225	300
	500.00	65	130	195	300
	350.00	50	100	150	300
	300.00	45	90	135	270
	250.00	40	80	120	240
	200.00	35	70	105	210
	150.00	30	60	90	180

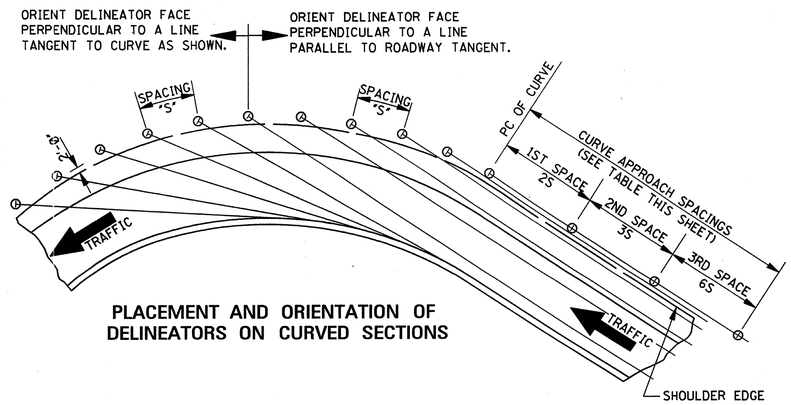

PLACEMENT AND ORIENTATION OF DELINEATORS ON CURVED SECTIONS

* NOTE: THE SPACING "S" ON THE CURVE IS FOUND FROM THE FORMULA $S=3\sqrt{R-50}$, WHERE R IS THE RADIUS OF THE CURVE IN FEET. THE SPACING OF THE FIRST DELINEATOR IN ADVANCE OF AND BEYOND THE CURVE IS 2S, THE SECOND DELINEATOR 3S, AND THE THIRD 6S, BUT NOT TO EXCEED 300' ALONG THE MAIN FACILITY AND 100' ALONG THE RAMPS. MINIMUM DELINEATOR SPACING IS 20'.

DATE	REVISION	BY

MISSISSIPPI DEPARTMENT OF TRANSPORTATION
ROADWAY DESIGN DIVISION
STANDARD PLAN

TYPICAL INSTALLATION OF DELINEATORS

ENGLISH

WORKING NUMBER SN-8A

ISSUE DATE: OCTOBER 1, 1998

SHEET NUMBER 234

STATE	PROJECT NO.
MISS.	

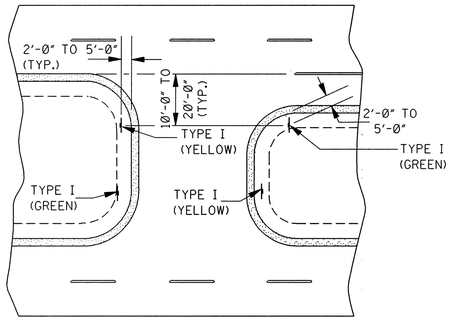

TYPICAL DELINEATION AT A CROSSOVER WITH USABLE SHOULDERS AND A MEDIAN WIDTH OVER 40'–0"

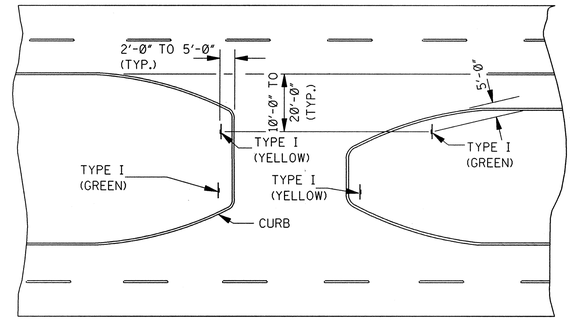

TYPICAL DELINEATION AT A CURBED CROSSOVER WITH A MEDIAN WIDTH OVER 40'–0"

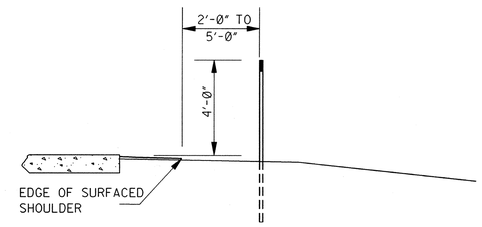

DELINEATOR MOUNTING ON CROSSOVER WITH USABLE SHOULDER

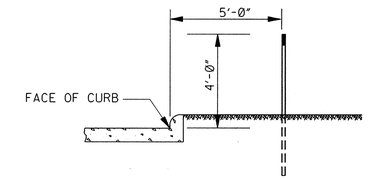

DELINEATOR MOUNTING ON CURBED CROSSOVER

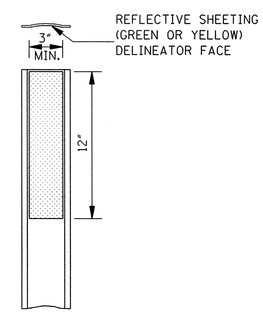

DETAIL OF TYPE I FLEXIBLE POST DELINEATOR

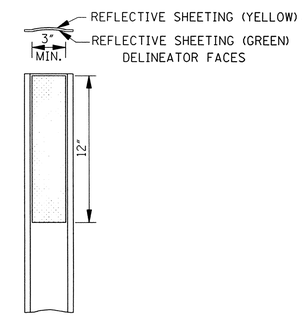

DETAIL OF TYPE II FLEXIBLE POST DELINEATOR

NOTE: CARSONITE'S CURV-FLEX DELINEATOR POSTS ARE SHOWN. OTHER FLEXIBLE POSTS THAT HAVE BEEN APPROVED FOR LISTING IN THE DEPARTMENT'S "APPROVED SOURCE OF MATERIALS" MAY BE FURNISHED.

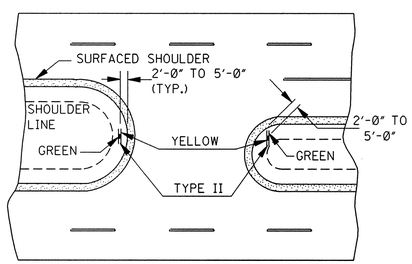

TYPICAL DELINEATION AT A CROSSOVER WITH USABLE SHOULDERS AND A MEDIAN WIDTH OF 40'–0" OR LESS

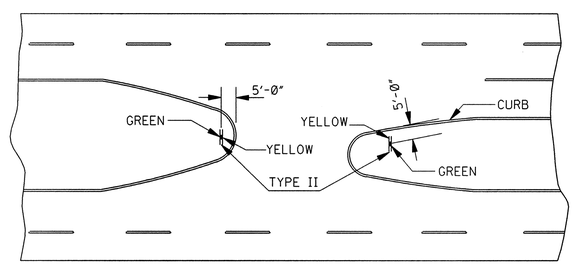

TYPICAL DELINEATION AT A CURBED CROSSOVER WITH A MEDIAN WIDTH OF 40'–0" OR LESS △1

NOTE: PLACE DELINEATORS NO MORE THAN 20'-0" FROM EDGE OF TRAVEL LANES EDGES.

GENERAL NOTES:

1. THE UNIT PRICE OF DELINEATOR INCLUDES: COST(S) OF DELINEATOR FACE(S), POST, HARDWARE AND INSTALLATION.
2. DELINEATOR FACE WILL BE ENCAPSULATED LENS REFLECTIVE SHEETING.
3. POST REQUIRING THE INSTALLATION OF A BASE SHALL BE INSTALLED IN ACCORDANCE WITH THE MANUFACTURER'S RECOMMENDATION.

DATE	REVISION	BY
12-1-99	REVISED CAPTION	S.W.R.

△1

MISSISSIPPI DEPARTMENT OF TRANSPORTATION
ROADWAY DESIGN DIVISION
STANDARD PLAN

TYPICAL CROSSOVER DELINEATION

ENGLISH

WORKING NUMBER
SN-8B

ISSUE DATE: OCTOBER 1, 1998

SHEET NUMBER
235

STATE	PROJECT NO.
MISS.	

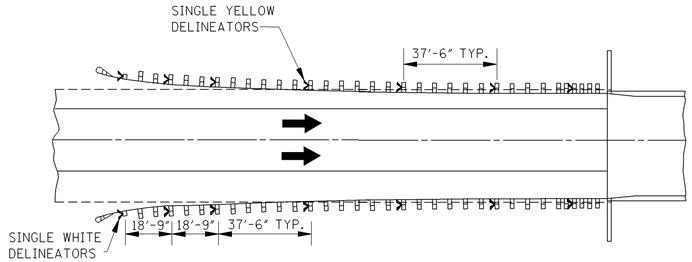

BRIDGE APPROACH INSTALLATION
(ONE-WAY TRAFFIC)

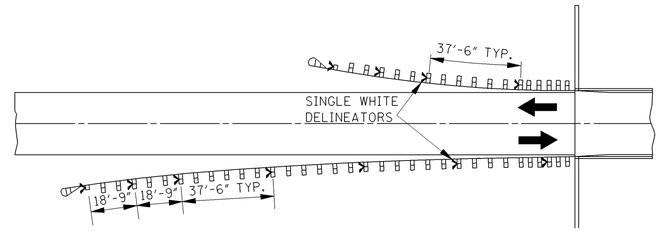

BRIDGE APPROACH INSTALLATION
(TWO-WAY TRAFFIC)

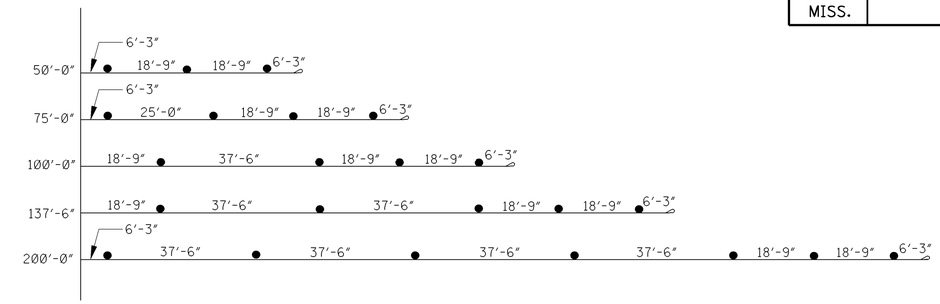

GRAPHIC SHOWING SPACINGS OF GUARDRAIL DELINEATORS AT SOME COMMONLY USED BRIDGE APPROACHES

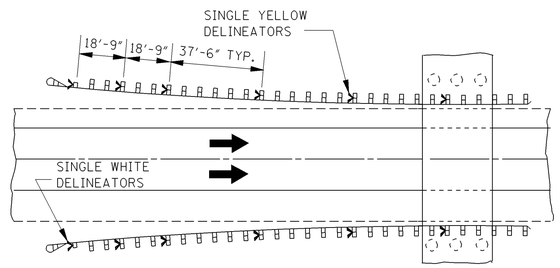

ROADSIDE OBSTACLE INSTALLATION–LENGTH 250' OR LESS
(ONE-WAY TRAFFIC)

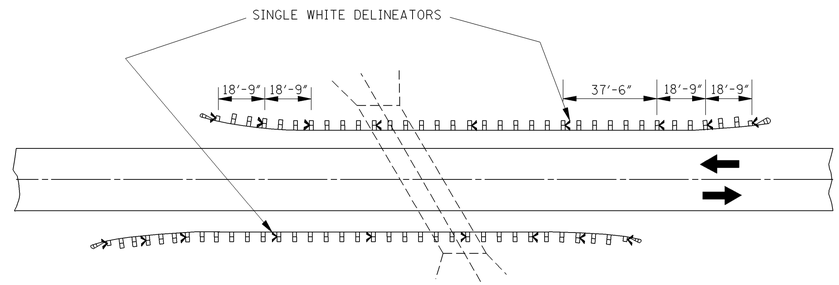

ROADSIDE OBSTACLE INSTALLATION–LENGTH 250' OR LESS
(TWO-WAY TRAFFIC)

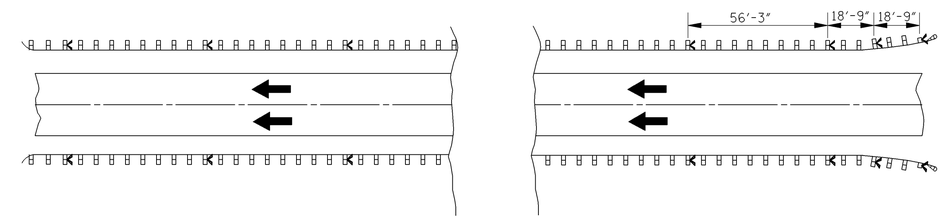

EMBANKMENT OR ROADSIDE OBSTACLE INSTALLATION–LENGTH GREATER THAN 250'
(ONE-WAY TRAFFIC)

NOTE: ONE-WAY TRAFFIC SHOWN. DELINEATOR SPACING FOR TWO-WAY TRAFFIC SIMILAR. DELINEATOR COLOR WILL BE THE SAME AS THE ADJACENT PAVEMENT EDGE MARKING. THE FIRST THREE (3) MARKERS WILL FACE TRAFFIC IN OFF LANE FOR TWO-WAY TRAFFIC AS SHOWN IN DRAWING FOR OBSTACLE INSTALLATION FOR TWO-WAY TRAFFIC.

GENERAL NOTES:

1. THE UNIT PRICE OF DELINEATOR INCLUDES: COST(S) OF DELINEATOR FACE(S), POST, HARDWARE AND INSTALLATION.

2. DELINEATOR FACE WILL BE ENCAPSULATED LENS REFLECTIVE SHEETING.

3. DELINEATORS FOR GUARDRAIL SHALL BE MOUNTED ON STEEL POSTS OR FLEXIBLE POSTS AS FOLLOWS:

   3A. DELINATORS ON STEEL POSTS:

   1. DELINEATOR FACE SHALL BE PLACED ON 0.080" THICK SHEET ALUMINUM OR 14 GAUGE GALVANIZED SHEET STEEL.

   2. DELINEATOR POSTS SHALL BE GALVANIZED STEEL U-SECTION POSTS (2.0 lb/ft TO 2.5 lb/ft). THE POSTS ARE TO BE FABRICATED BEFORE THE METAL IS GALVANIZED. RADIUS IN BENDS OF POST CROSS-SECTION NOT TO EXCEED 13/32" FOR HOT ROLLED SECTION.

   3. WHEN COVER OVER A DRAINAGE STRUCTURE IS LESS THAN THE NORMAL DELINEATOR POST DEPTH, THE DELINEATOR POSTS WILL BE FIELD CUT, DRILLED AND FASTENED TO THE BACK OF THE GUARDRAIL POSTS WITH (2) 1/4" DIA. LAG SCREWS.

   3B. DELINEATORS ON FLEXIBLE POSTS:

   △

   1. THE DELINEATOR POSTS WILL BE FROM THE DEPARTMENTS "APPROVED SOURCE OF MATERIALS" AND WILL BE FASTENED TO GUARDRAIL POST IN ACCORDANCE WITH THE MANUFACTURER'S RECOMMENDATION.

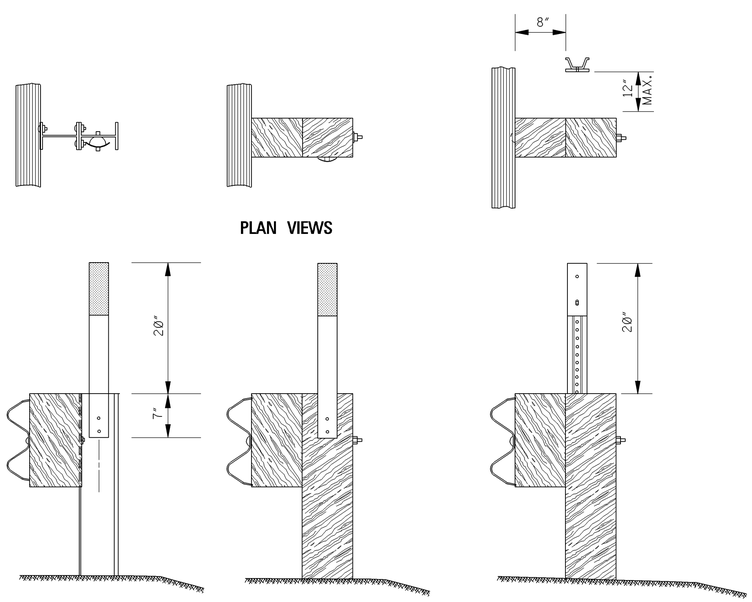

PLAN VIEWS

TYPICAL FLEXIBLE POST DELINEATOR GUARDRAIL INSTALLATION

TYPICAL STEEL POST DELINEATOR GUARDRAIL INSTALLATION

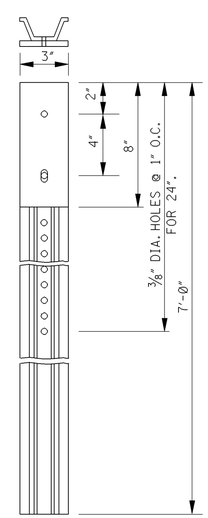

DETAIL OF SINGLE WHITE OR SINGLE YELLOW DELINEATOR

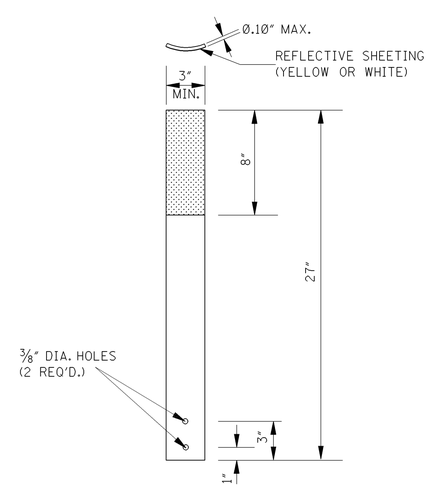

DETAIL OF FLEXIBLE GUARDRAIL DELINEATOR

△

DATE	REVISION	BY
3-01-02	DELETED NOTE	S.W.R.

MISSISSIPPI DEPARTMENT OF TRANSPORTATION
ROADWAY DESIGN DIVISION
STANDARD PLAN

TYPICAL GUARDRAIL DELINEATION

ENGLISH

WORKING NUMBER
SN-8C

ISSUE DATE: OCTOBER 1, 1998

SHEET NUMBER
236

STATE	PROJECT NO.
MISS.	

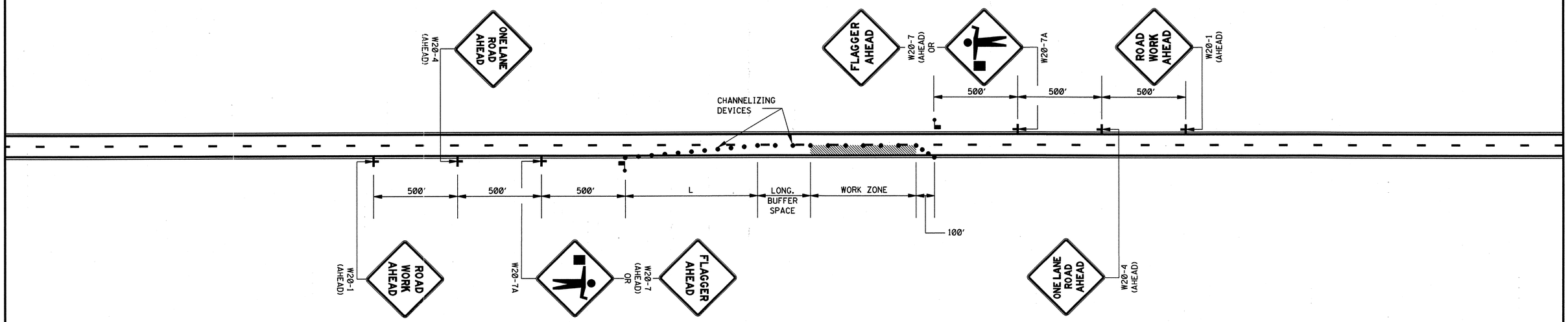

LEGEND

FLAGGER

● CHANNELIZING DEVICES

GENERAL NOTES:

1. THE LOCATION OF CHANNELIZING DEVICES AND THE WORK AREA LAYOUT SHALL BE BASED ON THE CRITERIA IN THE FOLLOWING TABLE:

POSTED SPEED AND/OR DESIGN SPEED	MAXIMUM CHANNELIZING DEVICE SPACING (ft)		MINIMUM LONGITUDINAL BUFFER SPACE (ft)	TAPER † RATES
	TAPER	ALONG LANE LINE & WORK ZONE		
mph				
≤40	40	80	170	27:1
45	45	90	220	45:1
50	50	100	280	50:1
55	55	110	335	55:1
60	60	120	415	60:1
65	65	130	485	65:1
70	70	140	575	70:1

† NOTE: TAPER RATES ARE DETERMINED USING THE FOLLOWING EQUATIONS:
$L = WS$ FOR SPEEDS OF 45 mph OR GREATER
$L = WS^2/60$ FOR SPEEDS OF 40 mph OR LESS
WHERE: L = MINIMUM LENGTH OF TAPER IN FEET
W = WIDTH OF OFFSET (USUALLY LANE WIDTH) IN FEET
S = DESIGN SPEED OR 85TH PERCENTILE SPEED IN MILES PER HOUR

2. ALL CHANNELIZING DEVICES SHALL BE A MINIMUM OF 24" IN HEIGHT.
3. ALL TRAFFIC CONTROL ITEMS SHOWN ON THIS SHEET WILL NOT BE MEASURED FOR SEPARATE PAYMENT. THIS WORK IS TO BE INCLUDED IN THE PRICE BID FOR MAINTENANCE OF TRAFFIC.
4. DIAMOND SHAPED TRAFFIC CONTROL SIGNS SHALL BE A MINIMUM OF 48" × 48".
5. WHEN THERE IS NO EXISTING HAZARD OR AT THE END OF THE WORK DAY, ALL SIGNS SHALL BE COVERED OR REMOVED AND ALL CHANNELIZING DEVICES SHALL BE MOVED TO THE SHOULDER EDGE.
6. WHERE THE WORK ZONE IS STATIONARY, THE W20-7 (500 FT.) SIGN OR THE W20-7A SIGN TOGETHER WITH THE W20-7 (500 FT.) SUPPLEMENTAL PLATE SHOULD BE USED TO INDICATE THE DISTANCE TO THE FLAGGER.

DATE	REVISION	BY

MISSISSIPPI DEPARTMENT OF TRANSPORTATION
ROADWAY DESIGN DIVISION
STANDARD PLAN

TRAFFIC CONTROL PLAN WITH FLAGGER
(ONE-LANE CLOSURE OF TWO-WAY TRAFFIC)

DEPARTMENT OF TRANSPORTATION MISSISSIPPI ENGLISH

WORKING NUMBER TCP-1

ISSUE DATE: OCTOBER 1, 1998

SHEET NUMBER 250

STATE	PROJECT NO.
MISS.	

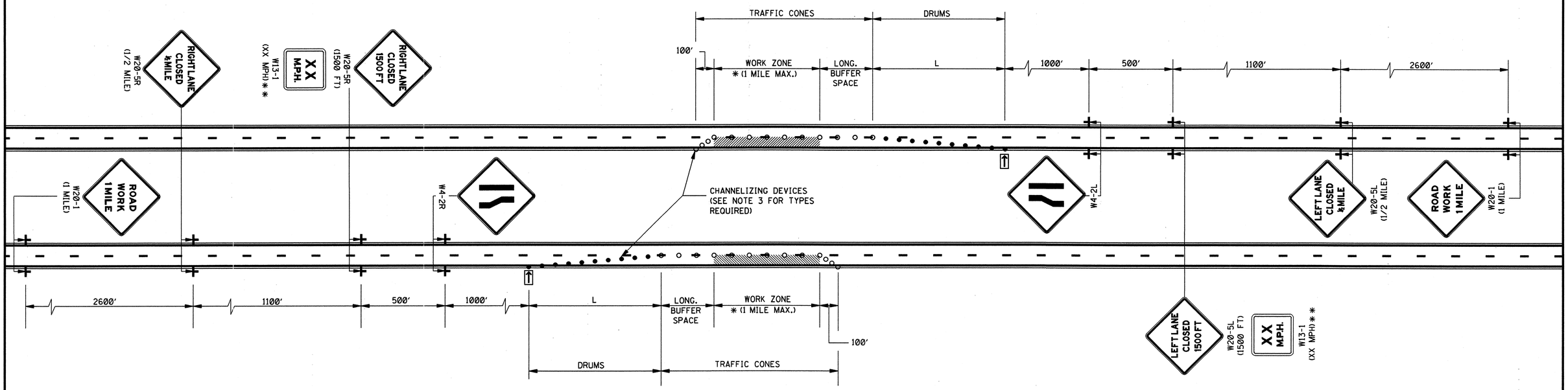

GENERAL NOTES:

1. THE LOCATION OF CHANNELIZING DEVICES AND THE WORK AREA LAYOUT SHALL BE BASED ON THE CRITERIA IN THE FOLLOWING TABLE:

POSTED SPEED AND/OR DESIGN SPEED	MAXIMUM CHANNELIZING DEVICE SPACING (ft)		MINIMUM LONGITUDINAL BUFFER SPACE (ft)	TAPER † RATES
	TAPER	ALONG LANE LINE & WORK ZONE		
mph				
≤40	40	80	170	27:1
45	45	90	220	45:1
50	50	100	280	50:1
55	55	110	335	55:1
60	60	120	415	60:1
65	65	130	485	65:1
70	70	140	575	70:1

† NOTE: TAPER RATES ARE DETERMINED USING THE FOLLOWING EQUATIONS:
$L = WS$ FOR SPEEDS OF 45 mph OR GREATER
$L = WS^2/60$ FOR SPEEDS OF 40 mph OR LESS
WHERE: L = MINIMUM LENGTH OF TAPER IN FEET
W = WIDTH OF OFFSET (USUALLY LANE WIDTH) IN FEET
S = DESIGN SPEED OR 85TH PERCENTILE SPEED IN MILES PER HOUR

2. FLASHING ARROW PANEL SHALL BE AS LEVEL AS POSSIBLE AS APPROVED BY THE ENGINEER. FLASHING ARROW PANEL SHOULD BE LOCATED AT THE BEGINNING OF THE TAPER OR, IF THE SHOULDER IS TOO NARROW, BEHIND THE CHANNELIZING DEVICES IN THE CLOSED LANE.

3. CHANNELIZING DEVICE TYPES FOR:
   A. APPROACH TAPER- REFLECTORIZED PLASTIC DRUMS
   B. ALONG LANE LINE AND WORK ZONE- TRAFFIC CONES (28" HEIGHT)
   C. EXIT TAPER- TRAFFIC CONES (28" HEIGHT)

4. WHEN THERE IS NO EXISTING HAZARD, ALL SIGNS SHALL BE COVERED OR REMOVED AND THE DRUMS SHALL BE MOVED TO THE SHOULDER EDGE AT THE END OF THE WORK DAY.

5. FOR MOVING OPERATIONS (PAVING) THE CONTRACTOR SHALL HAVE TWO (2) SETS OF ADVANCE WARNING SIGNS, PLASTIC DRUMS, AND ARROW BOARD. WHEN THE CONSTRUCTION ZONE IS MOVED AHEAD, ALL SIGNS, PLASTIC DRUMS AND ARROW BOARD SHALL BE IN PLACE ON THE SECOND ZONE BEFORE REMOVING ANY SIGNS, PLASTIC DRUMS OR ARROW BOARD ON THE FIRST ZONE.

6. ALL TRAFFIC CONTROL ITEMS SHOWN ON THIS SHEET WILL NOT BE MEASURED FOR SEPARATE PAYMENT. THIS WORK IS TO BE INCLUDED IN THE PRICE BID FOR MAINTENANCE OF TRAFFIC.

7. DIAMOND SHAPED TRAFFIC CONTROL SIGNS SHALL BE A MINIMUM OF 48" X 48".

LEGEND

* OR AS SHOWN ELSEWHERE OF THE PLANS.

** THE LEGEND ON W13-1 (XX MPH) SUPPLEMENTAL PLATE SHALL BE 10 MPH LESS THAN THE POSTED SPEED LIMIT.

FLASHING ARROW PANEL (TYPE "C")

● REFLECTORIZED FREE-STANDING PLASTIC DRUMS

○ TRAFFIC CONES (28" HEIGHT)

DATE	REVISION	BY

MISSISSIPPI DEPARTMENT OF TRANSPORTATION
ROADWAY DESIGN DIVISION
STANDARD PLAN

TRAFFIC CONTROL PLAN FOR POSTED SPEED LIMIT LESS THAN 65 MPH
(4-LANE: MEDIAN LANE OR OUTSIDE LANE CLOSURE)
(WORK DAY ONLY)

ENGLISH

WORKING NUMBER TCP-2

ISSUE DATE: OCTOBER 1, 1998

SHEET NUMBER 251

STATE	PROJECT NO.
MISS.	

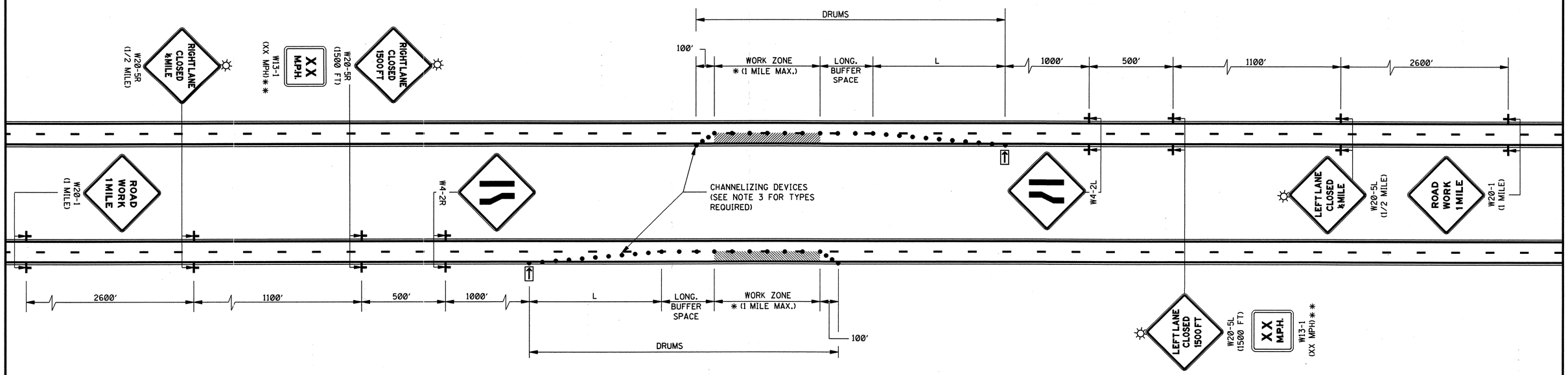

GENERAL NOTES:

1. THE LOCATION OF CHANNELIZING DEVICES AND THE WORK AREA LAYOUT SHALL BE BASED ON THE CRITERIA IN THE FOLLOWING TABLE:

POSTED SPEED AND/OR DESIGN SPEED	MAXIMUM CHANNELIZING DEVICE SPACING (ft)		MINIMUM LONGITUDINAL BUFFER SPACE (ft)	TAPER † RATES
mph	TAPER	ALONG LANE LINE & WORK ZONE		
≤40	40	80	170	27:1
45	45	90	220	45:1
50	50	100	280	50:1
55	55	110	335	55:1
60	60	120	415	60:1
65	65	130	485	65:1
70	70	140	575	70:1

† NOTE: TAPER RATES ARE DETERMINED USING THE FOLLOWING EQUATIONS:
$L = WS$ FOR SPEEDS OF 45 mph OR GREATER
$L = WS^2/60$ FOR SPEEDS OF 40 mph OR LESS
WHERE: L = MINIMUM LENGTH OF TAPER IN FEET
W = WIDTH OF OFFSET (USUALLY LANE WIDTH) IN FEET
S = DESIGN SPEED OR 85TH PERCENTILE SPEED IN MILES PER HOUR

2. FLASHING ARROW PANEL SHALL BE AS LEVEL AS POSSIBLE AS APPROVED BY THE ENGINEER. FLASHING ARROW PANEL SHOULD BE LOCATED AT THE BEGINNING OF THE TAPER OR, IF THE SHOULDER IS TOO NARROW, BEHIND THE CHANNELIZING DEVICES IN THE CLOSED LANE.
3. ALL CHANNELIZING DEVICES SHALL BE REFLECTORIZED FREE STANDING PLASTIC DRUMS.
4. FOR MOVING OPERATIONS (PAVING) THE CONTRACTOR SHALL HAVE TWO (2) SETS OF ADVANCE WARNING SIGNS, PLASTIC DRUMS, AND ARROW BOARD. WHEN THE CONSTRUCTION ZONE IS MOVED AHEAD, ALL SIGNS, PLASTIC DRUMS AND ARROW BOARD SHALL BE IN PLACE ON THE SECOND ZONE BEFORE REMOVING ANY SIGNS, PLASTIC DRUMS OR ARROW BOARD ON THE FIRST ZONE.
5. ALL TRAFFIC CONTROL ITEMS SHOWN ON THIS SHEET WILL NOT BE MEASURED FOR SEPARATE PAYMENT. THIS WORK IS TO BE INCLUDED IN THE PRICE BID FOR MAINTENANCE OF TRAFFIC.
6. DIAMOND SHAPED TRAFFIC CONTROL SIGNS SHALL BE A MINIMUM OF 48" X 48".

LEGEND

* OR AS SHOWN ELSEWHERE OF THE PLANS.
** THE LEGEND ON W13-1 (XX MPH) SUPPLEMENTAL PLATE SHALL BE 10 MPH LESS THAN THE POSTED SPEED LIMIT.
FLASHING ARROW PANEL (TYPE "C")
● REFLECTORIZED FREE-STANDING PLASTIC DRUMS
TYPE "B" WARNING LIGHTS

DATE	REVISION	BY

MISSISSIPPI DEPARTMENT OF TRANSPORTATION
ROADWAY DESIGN DIVISION
STANDARD PLAN

TRAFFIC CONTROL PLAN FOR POSTED SPEED LIMIT LESS THAN 65 MPH
(4-LANE: MEDIAN OR OUTSIDE LANE CLOSURE)
(EXTENDED PERIOD)

ENGLISH

WORKING NUMBER TCP-3

ISSUE DATE: OCTOBER 1, 1998

SHEET NUMBER 252

STATE	PROJECT NO.
MISS.	

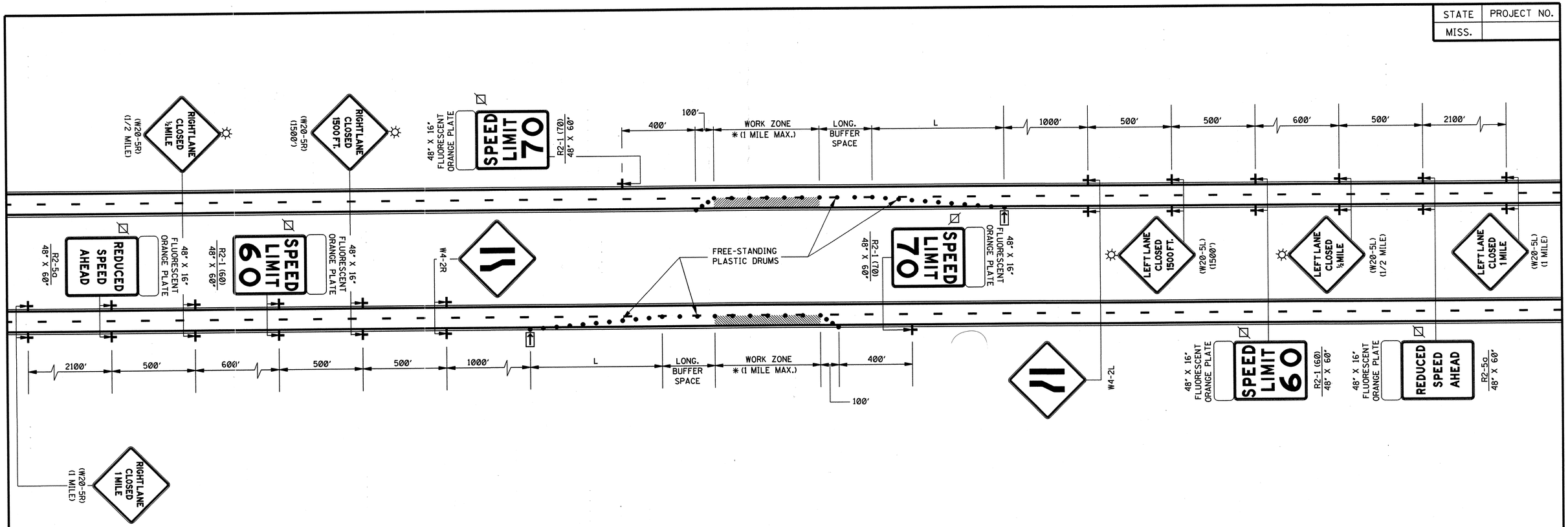

GENERAL NOTES:

1. THE LOCATION OF CHANNELIZING DEVICES AND THE WORK AREA LAYOUT SHALL BE BASED ON THE CRITERIA IN THE FOLLOWING TABLE:

POSTED SPEED AND/OR DESIGN SPEED	MAXIMUM CHANNELIZING DEVICE SPACING (ft)		MINIMUM LONGITUDINAL BUFFER SPACE (ft)	TAPER † RATES
	TAPER	ALONG LANE LINE & WORK ZONE		
mph				
≤40	40	80	170	27:1
45	45	90	220	45:1
50	50	100	280	50:1
55	55	110	335	55:1
60	60	120	415	60:1
65	65	130	485	65:1
70	70	140	575	70:1

† NOTE: TAPER RATES ARE DETERMINED USING THE FOLLOWING EQUATIONS:
$L = WS$ FOR SPEEDS OF 45 mph OR GREATER
$L = WS^2/60$ FOR SPEEDS OF 40 mph OR LESS
WHERE: L = MINIMUM LENGTH OF TAPER IN FEET
W = WIDTH OF OFFSET (USUALLY LANE WIDTH) IN FEET
S = DESIGN SPEED OR 85TH PERCENTILE SPEED IN MILES PER HOUR

2. FLASHING ARROW PANEL SHALL BE AS LEVEL AS POSSIBLE AS APPROVED BY THE ENGINEER. FLASHING ARROW PANEL SHOULD BE LOCATED AT THE BEGINNING OF THE TAPER OR, IF THE SHOULDER IS TOO NARROW, BEHIND THE CHANNELIZING DEVICES IN THE CLOSED LANE.

3. ALL CHANNELIZING DEVICES SHALL BE REFLECTORIZED FREE-STANDING PLASTIC DRUMS.

4. ALL TRAFFIC CONTROL ITEMS SHOWN ON THIS SHEET WILL NOT BE MEASURED FOR SEPARATE PAYMENT. THIS WORK IS TO BE INCLUDED IN THE PRICE BID FOR MAINTENANCE OF TRAFFIC.

5. DIAMOND SHAPED TRAFFIC CONTROL SIGNS SHALL BE A MINIMUM OF 48" X 48".

6. ALL EXISTING SPEED LIMIT SIGNS WHICH ARE INFLUENCED BY OR CONFLICT WITH THE SPEED ZONE REDUCTION SHALL BE COVERED AS DIRECTED BY THE ENGINEER WHILE THE REDUCED SPEED LIMIT IS IN EFFECT. TAPE SHALL NOT BE USED ON FACE OF SIGN.

7. ADDITIONAL REDUCED SPEED LIMIT SIGNS ARE REQUIRED AT EACH ENTRANCE RAMP WITHIN THE SPEED ZONE. A MINIMUM OF TWO (2) WILL BE REQUIRED FOR EACH RAMP. LOCATION AND NUMBER REQUIRED WILL BE DETERMINED BY THE ENGINEER.

8. THIS TRAFFIC CONTROL PLAN, WITH SPEED ZONE, MAY NOT BE USED ON ANY FACILITY WHERE THE POSTED SPEED LIMIT IS BELOW 65 MPH WITHOUT A COMMISSION ORDER REQUESTING A SPEED LIMIT REDUCTION.

9. LAYOUT SHOWN ABOVE IS FOR AN INTERSTATE WITH A POSTED SPEED LIMIT OF 70 MPH. FOR POSTED SPEED LIMIT OF 65 MPH, THE REDUCED SPEED LIMIT WILL BE 55 MPH.

10. A FLUORESCENT ORANGE PLATE IS REQUIRED WITH ALL REGULATORY SPEED LIMIT SIGNS AND "REDUCED SPEED AHEAD" SIGNS REQUIRED FOR LANE CLOSURE.

LEGEND

* OR AS SHOWN ELSEWHERE OF THE PLANS.
FLASHING ARROW PANEL (TYPE "C")
BLACK LEGEND AND BORDER ON WHITE BACKGROUND
TYPE "B" WARNING LIGHTS
● REFLECTORIZED FREE-STANDING PLASTIC DRUMS

DATE	REVISION	BY

MISSISSIPPI DEPARTMENT OF TRANSPORTATION
ROADWAY DESIGN DIVISION
STANDARD PLAN

TRAFFIC CONTROL PLAN FOR POSTED SPEED LIMIT OF 65 OR 70 MPH
(INTERSTATES AND OTHER 4-LANE DIVIDED HIGHWAYS)
(MEDIAN LANE OR OUTSIDE LANE CLOSURE) (EXTENDED PERIOD)

ENGLISH

WORKING NUMBER TCP-4

ISSUE DATE: OCTOBER 1, 1998

SHEET NUMBER 253

STATE	PROJECT NO.
MISS.	

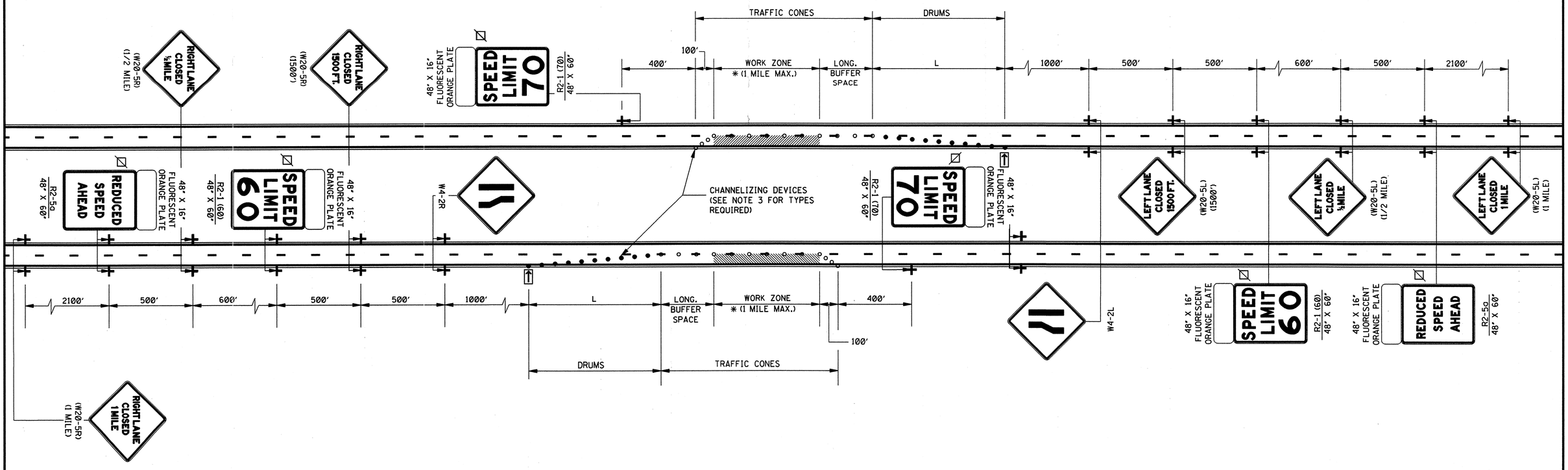

GENERAL NOTES:

1. THE LOCATION OF CHANNELIZING DEVICES AND THE WORK AREA LAYOUT SHALL BE BASED ON THE CRITERIA IN THE FOLLOWING TABLE:

POSTED SPEED AND/OR DESIGN SPEED	MAXIMUM CHANNELIZING DEVICE SPACING (ft)		MINIMUM LONGITUDINAL BUFFER SPACE (ft)	TAPER † RATES
	TAPER	ALONG LANE LINE & WORK ZONE		
mph				
≤40	40	80	170	27:1
45	45	90	220	45:1
50	50	100	280	50:1
55	55	110	335	55:1
60	60	120	415	60:1
65	65	130	485	65:1
70	70	140	575	70:1

† NOTE: TAPER RATES ARE DETERMINED USING THE FOLLOWING EQUATIONS:
$L = WS$ FOR SPEEDS OF 45 mph OR GREATER
$L = WS^2/60$ FOR SPEEDS OF 40 mph OR LESS
WHERE: L = MINIMUM LENGTH OF TAPER IN FEET
W = WIDTH OF OFFSET (USUALLY LANE WIDTH) IN FEET
S = DESIGN SPEED OR 85TH PERCENTILE SPEED IN MILES PER HOUR

2. FLASHING ARROW PANEL SHALL BE AS LEVEL AS POSSIBLE AS APPROVED BY THE ENGINEER. FLASHING ARROW PANEL SHOULD BE LOCATED AT THE BEGINNING OF THE TAPER OR, IF THE SHOULDER IS TOO NARROW, BEHIND THE CHANNELIZING DEVICES IN THE CLOSED LANE.

3. CHANNELIZING DEVICE TYPES FOR:
   A. APPROACH TAPER- REFLECTORIZED PLASTIC DRUMS
   B. ALONG LANE LINE AND WORK ZONE- TRAFFIC CONES (28" HEIGHT)
   C. EXIT TAPER- TRAFFIC CONES (28" HEIGHT)

4. WHEN THERE IS NO EXISTING HAZARD, ALL SIGNS SHALL BE COVERED OR REMOVED AND THE DRUMS SHALL BE MOVED TO THE SHOULDER EDGE AT THE END OF THE WORK DAY.

5. FOR MOVING OPERATIONS (PAVING) THE CONTRACTOR SHALL HAVE TWO (2) SETS OF ADVANCE WARNING AND REGULATORY SIGNS, PLASTIC DRUMS, AND ARROW BOARD. WHEN THE CONSTRUCTION ZONE IS MOVED AHEAD, ALL SIGNS, PLASTIC DRUMS AND ARROW BOARD SHALL BE IN PLACE ON THE SECOND ZONE BEFORE REMOVING ANY SIGNS, PLASTIC DRUMS OR ARROW BOARD ON THE FIRST ZONE.

6. ALL TRAFFIC CONTROL ITEMS SHOWN ON THIS SHEET WILL NOT BE MEASURED FOR SEPARATE PAYMENT. THIS WORK IS TO BE INCLUDED IN THE PRICE BID FOR MAINTENANCE OF TRAFFIC.

7. DIAMOND SHAPED TRAFFIC CONTROL SIGNS SHALL BE A MINIMUM OF 48" X 48".

8. ALL EXISTING SPEED LIMIT SIGNS WHICH ARE INFLUENCED BY OR CONFLICT WITH THE SPEED ZONE REDUCTION SHALL BE COVERED AS DIRECTED BY THE ENGINEER WHILE THE REDUCED SPEED LIMIT IS IN EFFECT. TAPE SHALL NOT BE USED ON THE FACE OF SIGN.

9. ADDITIONAL REDUCED SPEED LIMIT SIGNS ARE REQUIRED AT EACH ENTRANCE RAMP WITHIN THE SPEED ZONE. A MINIMUM OF TWO (2) WILL BE REQUIRED FOR EACH RAMP. LOCATION AND NUMBER REQUIRED WILL BE DETERMINED BY THE ENGINEER.

10. THIS TRAFFIC CONTROL PLAN, WITH SPEED ZONE, MAY NOT BE USED ON ANY FACILITY WHERE THE POSTED SPEED LIMIT IS BELOW 65 MPH WITHOUT A COMMISSION ORDER REQUESTING A SPEED LIMIT REDUCTION.

11. LAYOUT SHOWN ABOVE IS FOR AN INTERSTATE WITH A POSTED SPEED LIMIT OF 70 MPH. FOR POSTED SPEED LIMIT OF 65 MPH, THE REDUCED SPEED LIMIT WILL BE 55 MPH.

12. A FLUORESCENT ORANGE PLATE IS REQUIRED WITH ALL REGULATORY SPEED LIMIT SIGNS AND "REDUCED SPEED AHEAD" SIGNS REQUIRED FOR LANE CLOSURE.

LEGEND

* OR AS SHOWN ELSEWHERE OF THE PLANS.
FLASHING ARROW PANEL (TYPE "C")
BLACK LEGEND AND BORDER ON WHITE BACKGROUND
● REFLECTORIZED FREE-STANDING PLASTIC DRUMS
○ TRAFFIC CONES (28" HEIGHT)

DATE	REVISION	BY

MISSISSIPPI DEPARTMENT OF TRANSPORTATION
ROADWAY DESIGN DIVISION
STANDARD PLAN

TRAFFIC CONTROL PLAN FOR POSTED SPEED LIMIT OF 65 OR 70 MPH

(INTERSTATES AND OTHER 4-LANE DIVIDED HIGHWAYS)
(MEDIAN LANE OR OUTSIDE LANE CLOSURE) (WORK DAY ONLY)

ENGLISH

WORKING NUMBER: TCP-5

ISSUE DATE: OCTOBER 1, 1998

SHEET NUMBER: 254

STATE	PROJECT NO.
MISS.	

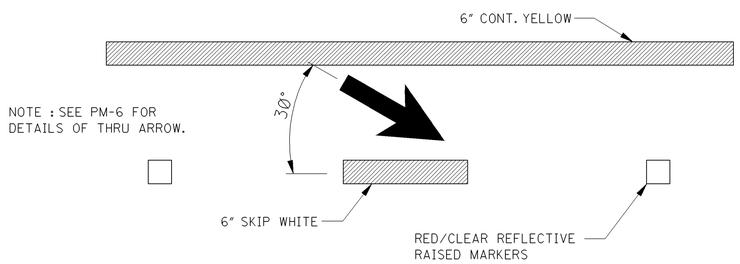

DETAIL D

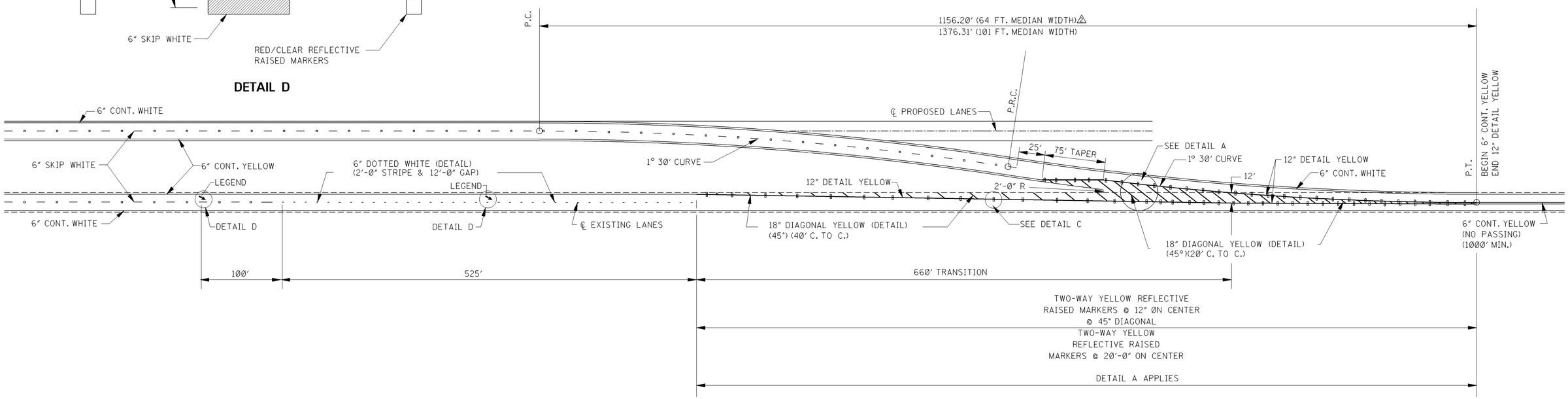

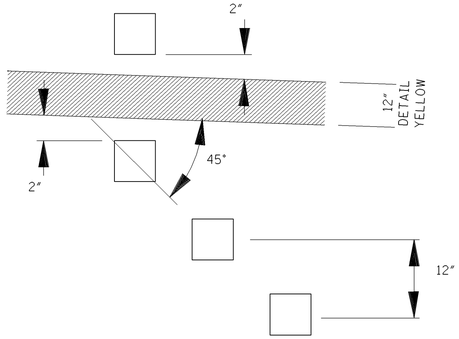

DETAIL B

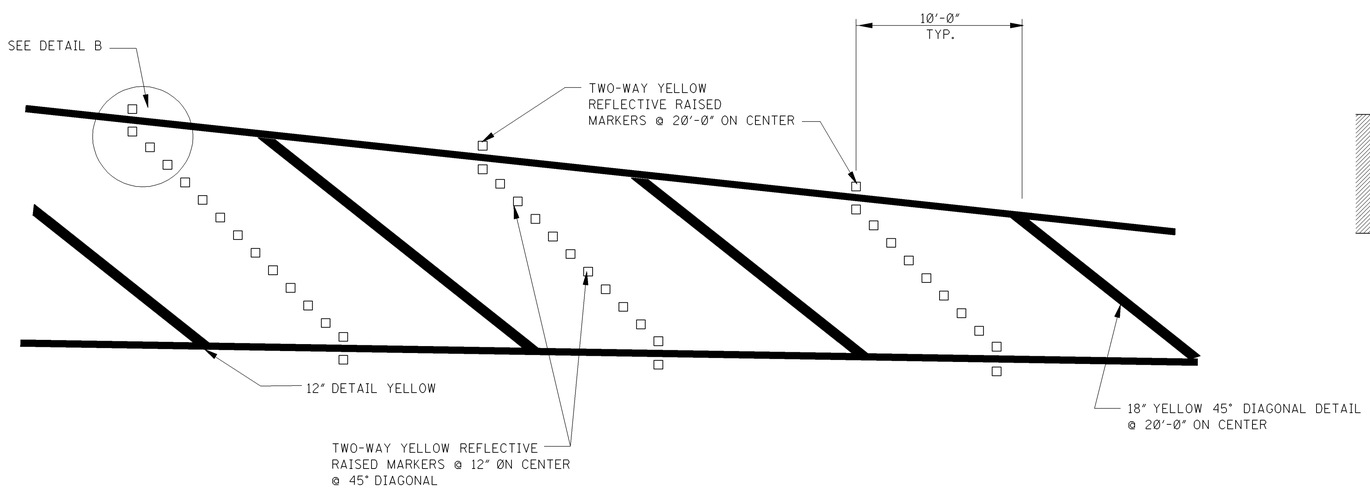

DETAIL A

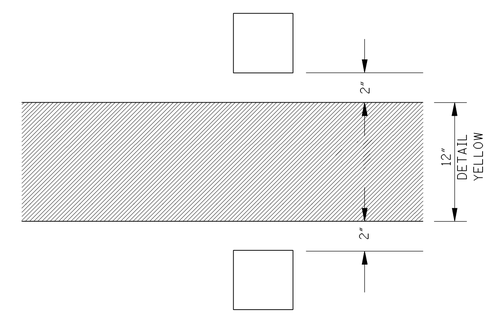

DETAIL C

DATE	REVISION	BY
3-01-02	REVISE DIMENSION	S.W.R.
12-1-99	REVISE STRIPE WIDTH	S.W.R.

MISSISSIPPI DEPARTMENT OF TRANSPORTATION
ROADWAY DESIGN DIVISION
STANDARD PLAN

4-LANE TO 2-LANE TRANSITION

ENGLISH

WORKING NUMBER
TCP-6

ISSUE DATE: OCTOBER 1, 1998

SHEET NUMBER
255

STATE	PROJECT NO.
MISS.	

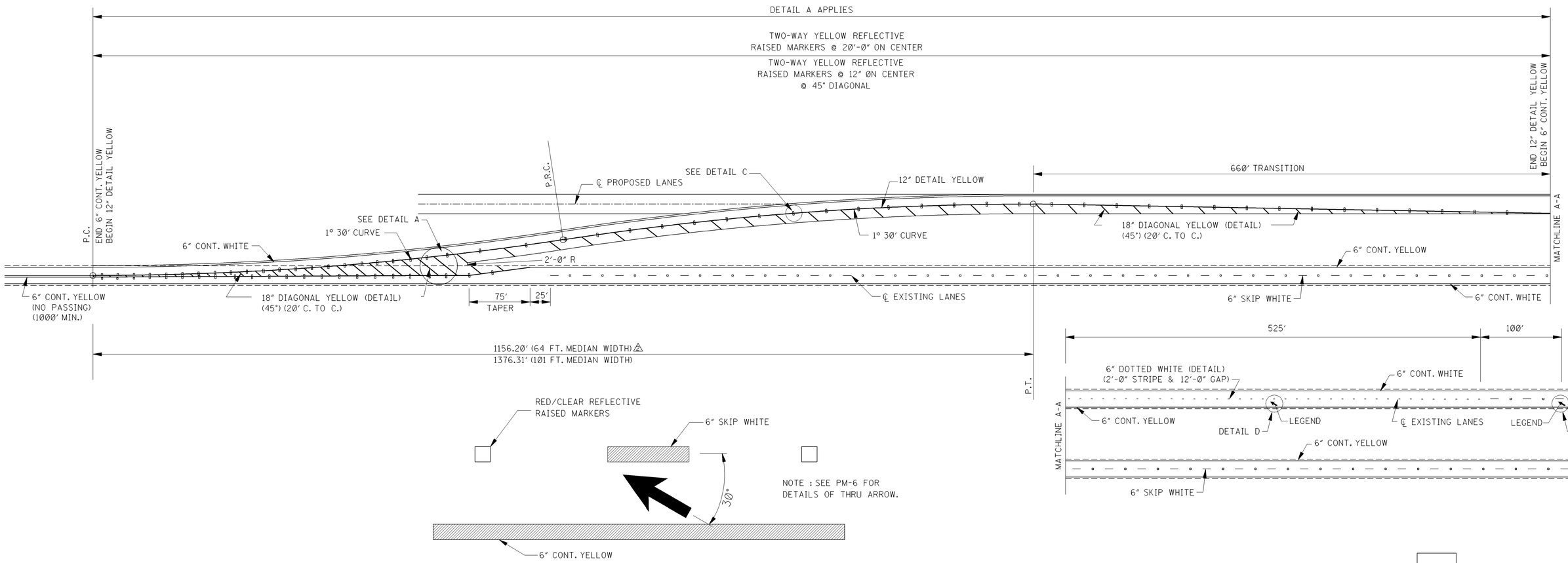

NOTE : SEE PM-6 FOR
DETAILS OF THRU ARROW.

DETAIL D

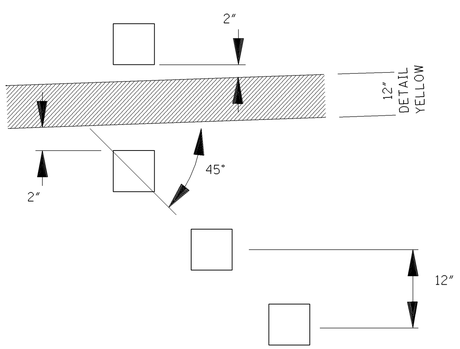

DETAIL B

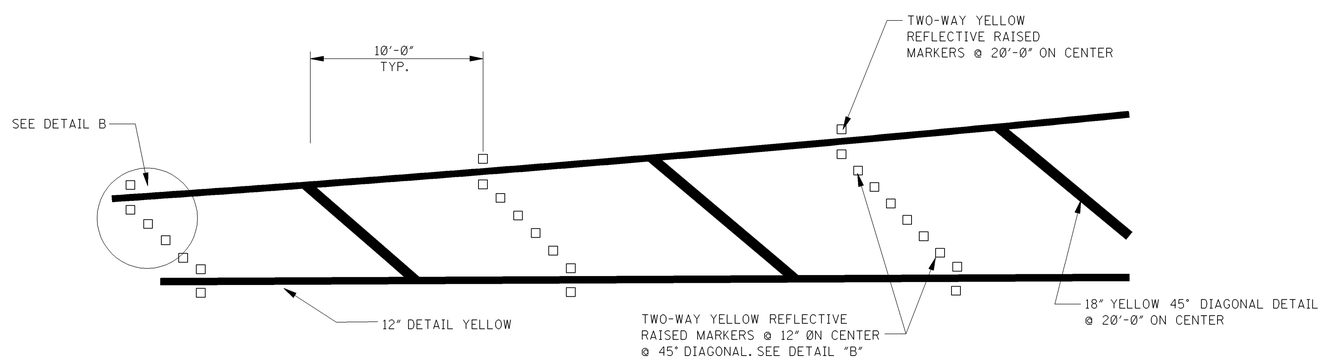

DETAIL A

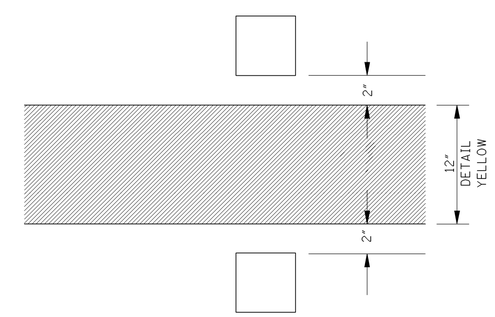

DETAIL C

DATE	REVISION	BY
5-01-02	REVISE DIMENSION	S.W.R.
12-1-99	REVISE STRIPE WIDTH	S.W.R.

MISSISSIPPI DEPARTMENT OF TRANSPORTATION
ROADWAY DESIGN DIVISION
STANDARD PLAN

2-LANE TO 4-LANE TRANSITION

ENGLISH

WORKING NUMBER
TCP-7

ISSUE DATE: OCTOBER 1, 1998

SHEET NUMBER
256

STATE	PROJECT NO.
MISS.	

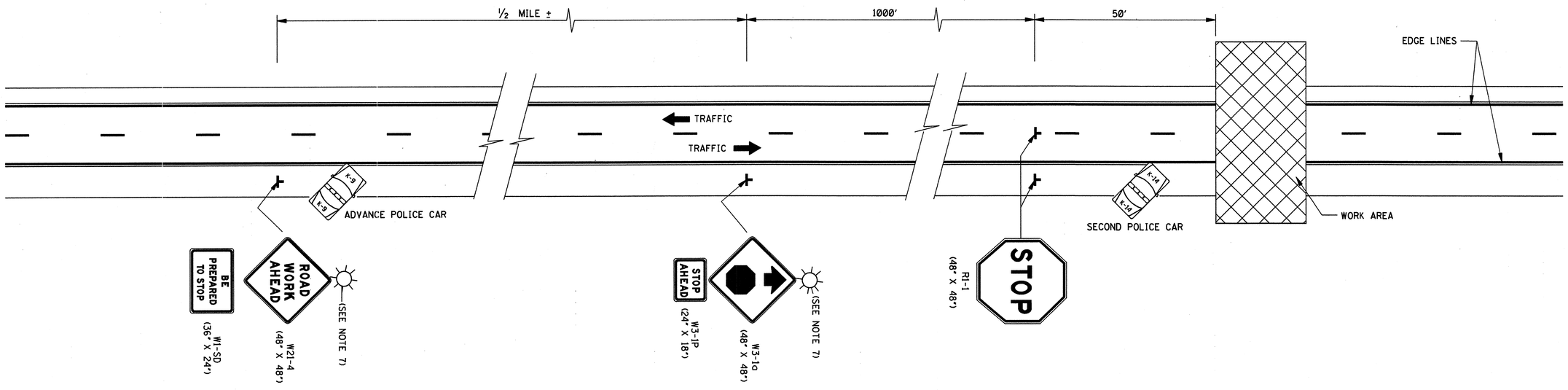

GENERAL NOTES:

1. THIS TYPE OF HIGHWAY CLOSURE SHALL ONLY BE USED FOR EMERGENCIES OR FOR CONSTRUCTION OPERATIONS WHEN THE DURATION OF CLOSURE WILL NOT EXCEED 30 MINUTES. AFTER THE HIGHWAY HAS BEEN CLOSED AND REOPENED VIA THIS PROCEDURE, A MINIMUM PERIOD OF 30 MINUTES SHALL ELAPSE BEFORE ANOTHER SHORT DURATION CLOSURE, EXCEPT WITH THE APPROVAL OF THE ENGINEER.

2. AT LEAST TWO POLICEMEN AND TWO POLICE CARS SHALL BE PROVIDED ON EACH APPROACH TO THE CLOSURE. EACH POLICE CAR SHALL HAVE A ROOF MOUNTED ROTATING BLUE LIGHT OR LIGHT BAR.

3. ROAD CLOSURES ARE NOT PERMITTED ON HOLIDAYS OR BETWEEN THE HOURS OF 6 AM TO 9 AM, 11 AM TO 1 PM AND 3 PM TO 6 PM ON MONDAY THROUGH FRIDAY, EXCEPT BY PERMISSION OF THE ENGINEER.

4. THE ADVANCE POLICE CAR AND THE "W21-4 (48" X 48")", "W1-SD (36" X 24")", "W3-1a (48" X 48")", AND "W3-1P (24" X 18")" SIGNS SHALL BE MOVED BACK AS REQUIRED BY THE QUEUING OF STOPPED VEHICLES.

5. TRAFFIC CONTROL FOR THE CLOSURE SHALL BE ACCOMPLISHED IN THE FOLLOWING ORDER:
   A. ADVANCE POLICE CAR, LIGHTS AND FLASHERS ON.
   B. "W21-4 (48" X 48")" AND "W1-SD (36" X 24")" SIGNS ERECTED.
   C. "W3-1a (48" X 48")" AND "W3-1P (24" X 18")" SIGNS ERECTED.
   D. SECOND POLICE CAR, LIGHTS AND FLASHERS ON.
   E. "R1-1 (48" X 48")" SIGNS ERECTED TO STOP TRAFFIC. THE ORDER OF ERECTION SHALL BE IN THE FOLLOWING ORDER: RIGHT SHOULDER THEN CENTER.

6. TRAFFIC CONTROL SHALL BE REMOVED IN THE FOLLOWING ORDER:
   A. WITH TRAFFIC STOPPED REMOVE THE "R1-1 (48" X 48")" SIGNS TOWARD THE RIGHT SHOULDER IN THE FOLLOWING ORDER: CENTER THEN SIGN ON THE RIGHT SHOULDER.
   B. AFTER ALL STOPPED VEHICLES HAVE STARTED MOVING, THE "W3-1a (48" X 48")" AND "W3-1P (24" X 18")" SIGNS SHALL BE REMOVED. THESE SIGNS MAY BE COVERED IF RE-USE IS IMMINENT.
   C. AFTER ALL CARS HAVE RESUMED APPROXIMATELY NORMAL SPEED, THE "W21-4 (48" X 48")" AND "W1-SD (36" X 24")" SIGNS SHALL BE REMOVED. THESE SIGNS MAY BE COVERED IF RE-USE IS IMMINENT.

7. UNILLUMINATED SECTIONS OF HIGHWAYS SHALL NOT BE CLOSED DURING HOURS OF DARKNESS EXCEPT FOR EMERGENCIES OR WITH THE APPROVAL OF THE ENGINEER. WHEN THE HIGHWAY MUST BE CLOSED DURING HOURS OF DARKNESS, A TYPE B HIGH INTENSITY FLASHING BARRICADE WARNING LIGHT SHALL BE USED ON EACH W21-4 AND W3-1a SIGN.

8. IF AN ENTRANCE RAMP IS LOCATED BETWEEN THE W21-4 AND R1-1, THE "W21-4 (48" X 48")", "W1-SD (36" X 24")", "W3-1a (48" X 48")", AND "W3-1P (24" X 18")" SIGNS SHALL ALSO BE ERECTED ON THE RAMP SHOULDER.

9. SIGN "W1-SD (36" X 24")" IS 4" SERIES "C" BLACK LEGEND AND BORDER ON ORANGE BACKGROUND.

10. ALL TRAFFIC CONTROL ITEMS SHOWN ON THIS SHEET WILL NOT BE MEASURED FOR SEPARATE PAYMENT. THIS WORK IS TO BE INCLUDED IN THE PRICE BID FOR MAINTENANCE OF TRAFFIC, INCLUDING SECURING POLICE SERVICES.

11. THE ABOVE DURATION WILL APPLY TO EACH APPROACH TO THE CLOSURE.

DATE	REVISION	BY

MISSISSIPPI DEPARTMENT OF TRANSPORTATION
ROADWAY DESIGN DIVISION
STANDARD PLAN

SHORT DURATION CLOSING OF TWO-LANE TWO-WAY HIGHWAYS

DEPARTMENT OF TRANSPORTATION MISSISSIPPI ENGLISH

WORKING NUMBER TCP-8

ISSUE DATE: OCTOBER 1, 1998

SHEET NUMBER 257

STATE	PROJECT NO.
MISS.	

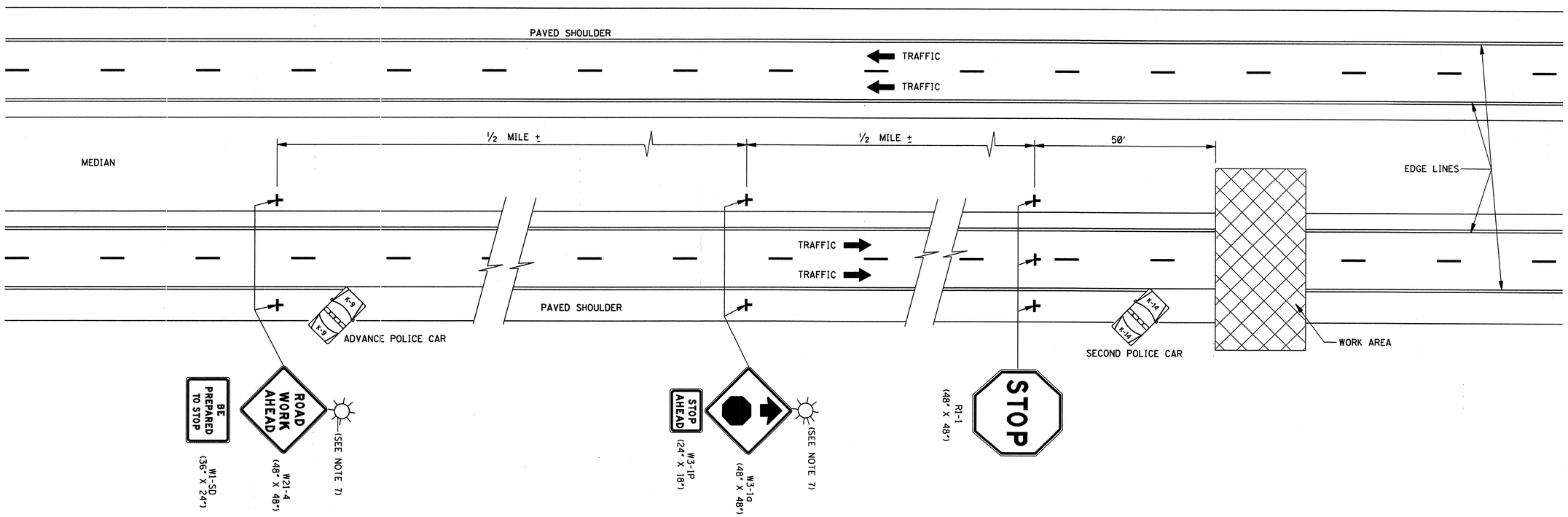

GENERAL NOTES:

1. THIS TYPE OF HIGHWAY CLOSURE SHALL ONLY BE USED FOR EMERGENCIES OR FOR CONSTRUCTION OPERATIONS WHEN THE DURATION OF CLOSURE WILL NOT EXCEED 15 MINUTES. AFTER THE DIVIDED HIGHWAY HAS BEEN CLOSED AND REOPENED VIA THIS PROCEDURE A MINIMUM PERIOD OF 30 MINUTES SHALL ELAPSE BEFORE ANOTHER SHORT DURATION CLOSURE, EXCEPT WITH THE APPROVAL OF THE ENGINEER.

2. AT LEAST TWO POLICEMEN AND TWO POLICE CARS SHALL BE PROVIDED ON EACH APPROACH TO THE CLOSURE. EACH POLICE CAR SHALL HAVE A ROOF MOUNTED ROTATING BLUE LIGHT OR LIGHT BAR.

3. ROAD CLOSURES ARE NOT PERMITTED ON HOLIDAYS OR BETWEEN THE HOURS OF 6 AM TO 9 AM, 11 AM TO 1 PM AND 3 PM TO 6 PM ON MONDAY THROUGH FRIDAY, EXCEPT BY PERMISSION OF THE ENGINEER.

4. THE ADVANCE POLICE CAR AND THE "W21-4 (48" X 48")", "W1-SD (36" X 24")", "W3-1a (48" X 48")", AND "W3-1P (24" X 18")" SIGNS SHALL BE MOVED BACK AS REQUIRED BY THE QUEUING OF STOPPED VEHICLES.

5. TRAFFIC CONTROL FOR THE CLOSURE SHALL BE ACCOMPLISHED IN THE FOLLOWING ORDER:
   A. ADVANCE POLICE CAR, LIGHTS AND FLASHERS ON.
   B. "W21-4 (48" X 48")" AND "W1-SD (36" X 24")" SIGNS ERECTED.
   C. "W3-1a (48" X 48")" AND "W3-1P (24" X 18")" SIGNS ERECTED.
   D. SECOND POLICE CAR, LIGHTS AND FLASHERS ON.
   E. "R1-1 (48" X 48")" SIGNS ERECTED TO STOP TRAFFIC. THE ORDER OF ERECTION SHALL BE TOWARD THE MEDIAN SHOULDER IN THE FOLLOWING ORDER: RIGHT SHOULDER, THEN CENTER, THEN MEDIAN SHOULDER.

6. TRAFFIC CONTROL SHALL BE REMOVED IN THE FOLLOWING ORDER:
   A. WITH TRAFFIC STOPPED REMOVE THE "R1-1 (48" X 48")" SIGNS TOWARD THE RIGHT SHOULDER IN THE FOLLOWING ORDER: MEDIAN, THEN CENTER, THEN SIGN ON RIGHT SHOULDER.
   B. AFTER ALL STOPPED VEHICLES HAVE STARTED MOVING, THE "W3-1a (48" X 48")" AND "W3-1P (24" X 18")" SIGNS SHALL BE REMOVED. THESE SIGNS MAY BE COVERED IF RE-USE IS IMMINENT.
   C. AFTER ALL CARS HAVE RESUMED APPROXIMATELY NORMAL SPEED, THE "W21-4 (48" X 48")" AND "W1-SD (36" X 24")" SIGNS SHALL BE REMOVED. THESE SIGNS MAY BE COVERED IF RE-USE IS IMMINENT.

7. UNILLUMINATED SECTIONS OF HIGHWAYS SHALL NOT BE CLOSED DURING HOURS OF DARKNESS EXCEPT FOR EMERGENCIES OR WITH THE APPROVAL OF THE ENGINEER. WHEN THE HIGHWAY MUST BE CLOSED DURING HOURS OF DARKNESS, A TYPE B HIGH INTENSITY FLASHING BARRICADE WARNING LIGHT SHALL BE USED ON EACH W21-4 AND W3-1a SIGN.

8. IF AN ENTRANCE RAMP IS LOCATED BETWEEN THE W21-4 AND R1-1, THE "W21-4 (48" X 48")", "W1-SD (36" X 24")", "W3-1a (48" X 48")", AND "W3-1P (24" X 18")" SIGNS SHALL ALSO BE ERECTED ON THE RAMP SHOULDER.

9. SIGN "W1-SD (36" X 24")" IS 4" SERIES "C" BLACK LEGEND AND BORDER ON ORANGE BACKGROUND.

10. ALL TRAFFIC CONTROL ITEMS SHOWN ON THIS SHEET WILL NOT BE MEASURED FOR SEPARATE PAYMENT. THIS WORK IS TO BE INCLUDED IN THE PRICE BID FOR MAINTENANCE OF TRAFFIC, INCLUDING SECURING POLICE SERVICES.

DATE	REVISION	BY

MISSISSIPPI DEPARTMENT OF TRANSPORTATION
ROADWAY DESIGN DIVISION
STANDARD PLAN

SHORT DURATION CLOSING OF DIVIDED HIGHWAYS

ENGLISH

WORKING NUMBER TCP-9

ISSUE DATE: OCTOBER 1, 1998

SHEET NUMBER 258

STATE	PROJECT NO.
MISS.	

TYPE I

TYPE II

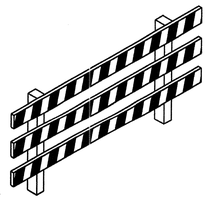

TYPE III

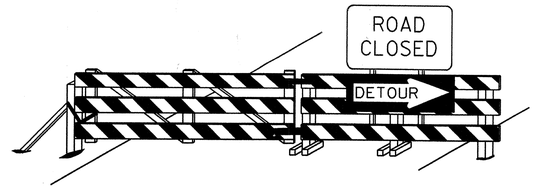

BARRICADE CLOSING A ROAD

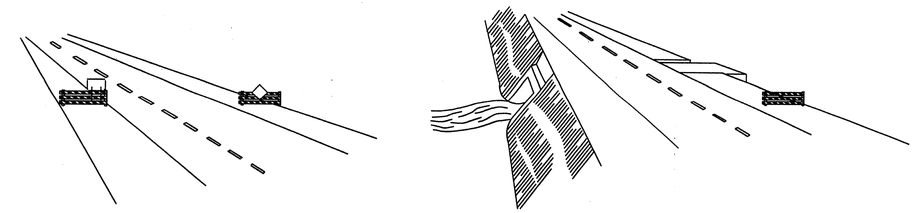

STANDARD BARRICADES

1. A TYPE I BARRICADE CONSISTS OF ONE (1) HORIZONTAL RAIL SUPPORTED BY A DEMOUNTABLE FRAME OR A LIGHT "A" FRAME. A TYPE I BARRICADE NORMALLY WOULD BE USED ON CONVENTIONAL ROADS OR URBAN STREETS AND ARTERIALS.
2. A TYPE II BARRICADE CONSISTS OF TWO (2) HORIZONTAL RAILS ON A LIGHT "A" FRAME. TYPE II BARRICADES ARE INTENDED FOR USE ON EXPRESSWAYS AND FREEWAYS AND OTHER HIGH-SPEED ROADWAYS.
3. TYPE I AND TYPE II BARRICADES ARE INTENDED FOR USE WHERE THE HAZARD IS RELATIVELY SMALL AS, FOR EXAMPLE, ON CITY STREETS, OR FOR THE MORE OR LESS CONTINUOUS DELIMITING OF A RESTRICTED ROADWAY, OR FOR TEMPORARY DAYTIME USE.
4. A TYPE III BARRICADE CONSISTS OF THREE (3) HORIZONTAL RAILS SUPPORTED BY FIXED POSTS, A RIGID SKID, A HEAVY DEMOUNTABLE FRAME OR A HEAVY, HINGED "A" FRAME.
5. TYPE III BARRICADES ARE INTENDED FOR USE ON CONSTRUCTION AND MAINTENANCE PROJECTS AS WING BARRICADES AND AT ROAD CLOSURES, WHERE THEY MUST REMAIN IN PLACE FOR EXTENDED PERIODS.
6. THE MARKING FOR BARRICADE RAILS SHALL BE ORANGE AND WHITE (SLOPING DOWNWARD AT AN ANGLE OF 45° IN THE DIRECTION TRAFFIC IS TO PASS).
7. DO NOT PLACE SANDBAGS OR OTHER DEVICES TO PROVIDE MASS ON THE BOTTOM RAIL THAT WILL BLOCK VIEW OR RAIL FACE.
8. FOR ADDITIONAL INFORMATION OR DETAILS, SEE MUTCD, LATEST EDITION.

BARRICADE CHARACTERISTICS

	I	II	III
WIDTH OF RAIL **	8" MIN. - 12" MAX.	8" MIN. - 12" MAX.	8" MIN. - 12" MAX.
LENGTH OF RAIL**	24" MIN.	24" MIN.	48" MIN.
WIDTH OF STRIPE *	6"	6"	6"
HEIGHT	36" MIN.	36" MIN.	60" MIN.
NUMBER OF REFLECTORIZED RAIL FACES	2 (ONE EACH DIRECTION)	4 (TWO EACH DIRECTION)	3 IF FACING TRAFFIC IN ONE DIRECTION 6 IF FACING TRAFFIC IN TWO DIRECTIONS
TYPE OF FRAME	LIGHT	LIGHT "A" FRAME	POST OR SKID

* 1. FOR RAILS LESS THAN 36" LONG, 4" WIDE STRIPES MAY BE USED.

** 2. BARRICADES INTENDED FOR USE ON EXPRESSWAYS, FREEWAYS AND OTHER HIGH SPEED ROADWAYS, SHALL HAVE A MINIMUM OF 270 in^2 OF REFLECTIVE AREA FACING TRAFFIC.

WING BARRICADES

1. WING BARRICADES ARE TYPE III BARRICADES ERECTED ON THE SHOULDER ON ONE OR BOTH SIDES OF THE PAVEMENT TO GIVE THE SENSATION OF A NARROWING OR RESTRICTED ROADWAY. WING BARRICADES MAY BE USED AS A MOUNTING FOR THE ADVANCE WARNING SIGNS OR FLASHERS.
2. WING BARRICADES SHOULD BE USED:
   A. IN ADVANCE OF A CONSTRUCTION PROJECT EVEN WHEN NO PART OF THE ROADWAY IS ACTUALLY CLOSED.
   B. IN ADVANCE OF ALL BRIDGE OR CULVERT WIDENING OPERATIONS.

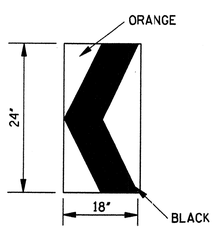

CHEVRON SIGN DETAIL

1. A CHEVRON SIGN CONSISTS OF A BLACK CHEVRON TYPE MARKING ON AN ORANGE BACKGROUND AND SHALL POINT IN THE DIRECTION OF TRAFFIC FLOW.
2. THE CHEVRON SIGN SHALL BE MOUNTED ON FIXED POST OR RIGID SKID.
3. CHEVRON SIGNS MAY BE USED TO SUPPLEMENT OTHER STANDARD DEVICES WHERE ONE OR MORE LANES ARE CLOSED FOR CONSTRUCTION OR MAINTENANCE. THEY SHALL BE PLACED APPROXIMATELY 2'-0" BEHIND THE LANE TRANSITION STRIPE.

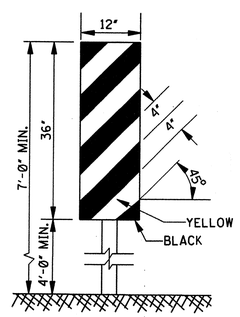

TYPE 3 OBJECT MARKER
(OM-3R)

1. TYPE 3 OBJECT MARKERS SHALL BE USED AT ALL EXPOSED BRIDGE ABUTMENTS AND AT OTHER LOCATIONS AS DEEMED NECESSARY BY THE ENGINEER.
2. THE OM-3R IS SHOWN. THE OM-3L IS SIMILAR EXCEPT THE STRIPES SLOPE DOWNWARD FROM THE UPPER LEFT SIDE TO THE LOWER RIGHT SIDE AND SHALL BE PLACED ON THE LEFT SIDE OF THE OBJECT.
3. THE INSIDE EDGE OF THE MARKER SHALL BE IN LINE WITH THE INNER EDGE OF THE OBSTRUCTION.

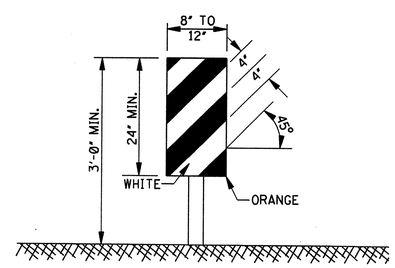

VERTICAL PANEL

1. VERTICAL PANELS CONSIST OF AT LEAST ONE PANEL 8" TO 12" IN WIDTH AND A MINIMUM OF 24" IN HEIGHT.
2. THE DIAGONAL STRIPES SHALL SLOPE DOWNWARD IN THE DIRECTION THAT TRAFFIC IS TO PASS THE PANEL. THE PANELS SHALL BE MOUNTED WITH THE TOP A MINIMUM OF 36" ABOVE THE ROADWAY ON A SINGLE LIGHTMASS POST.
3. VERTICAL PANELS USED ON EXPRESSWAYS, FREEWAYS AND OTHER HIGH-SPEED ROADWAYS SHALL HAVE A MINIMUM OF 270 in^2 OF RETROREFLECTIVE AREA FACING TRAFFIC.
4. FOR TWO-WAY TRAFFIC OPERATIONS, BACK-TO-BACK PANELS SHALL BE USED.

GENERAL NOTES:

1. MARKINGS ON ALL DEVICES SHOWN ON THIS SHEET SHALL BE HIGH INTENSITY REFLECTIVE SHEETING.
2. THE TRAFFIC CONTROL PLAN WILL LIST THE VARIOUS TRAFFIC CONTROL DEVICES REQUIRED FOR EACH PROJECT.

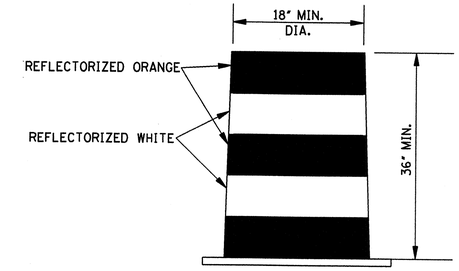

PLASTIC DRUM STRIPING DETAIL

1. PLASTIC DRUMS SHALL BE ON END AND USED AS AN EXPEDIENT METHOD FOR TRAFFIC CHANNELIZATION. THE COLOR AND MARKING OF DRUMS SHALL BE CONSISTENT WITH MARKING STANDARDS FOR BARRICADE. THE PREDOMINANT COLOR ON DRUMS SHALL BE ORANGE WITH FOUR (4) REFLECTORIZED, HORIZONTAL, CIRCUMFERENTIAL STRIPES (2 ORANGE & 2 WHITE) 6" WIDE.
2. DRUMS SHOULD NEVER BE PLACED IN THE ROADWAY WITHOUT WARNING SIGNS.
3. WHERE PRACTICAL PLASTIC DRUMS SHALL BE PLACED NO CLOSER THAN 3'-0" FROM THE EDGE OF TRAVELED LANE.

DATE	REVISION	BY

MISSISSIPPI DEPARTMENT OF TRANSPORTATION
ROADWAY DESIGN DIVISION
STANDARD PLAN

HIGHWAY SIGN AND BARRICADE DETAILS FOR CONSTRUCTION PROJECTS

DEPARTMENT OF TRANSPORTATION ENGLISH MISSISSIPPI

WORKING NUMBER TCP-10

ISSUE DATE: OCTOBER 1, 1998

SHEET NUMBER 259

STATE	PROJECT NO.
MISS.	

MOBILE OPERATIONS ON MULTILANE ROAD △

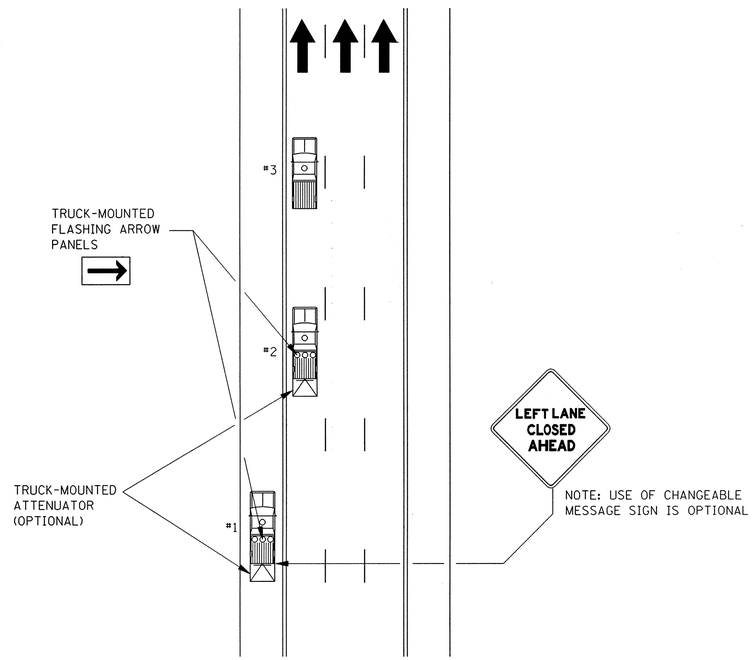

MOBILE OPERATIONS ON MULTILANE ROAD

NOTES:

1. VEHICLES USED FOR THESE OPERATIONS SHOULD BE MADE HIGHLY VISIBLE WITH APPROPRIATE EQUIPMENT, SUCH AS FLASHING LIGHTS, ROTATING BEACONS, FLAGS, SIGNS, OR ARROW PANELS.
2. PROTECTION VEHICLE #1 SHOULD BE EQUIPPED WITH AN ARROW PANEL. AN APPROPRIATE LANE CLOSURE SIGN SHOULD BE PLACED ON PROTECTION VEHICLE #1 SO AS NOT TO OBSCURE THE ARROW PANEL.
3. PROTECTION VEHICLE #2 SHOULD BE EQUIPPED WITH AN ARROW PANEL AND TRUCK-MOUNTED ATTENUATOR (TMA).
4. PROTECTION VEHICLE #1 SHOULD TRAVEL AT A VARYING DISTANCE FROM THE WORK OPERATION SO AS TO PROVIDE ADEQUATE SIGHT DISTANCE FOR TRAFFIC APPROACHING FROM THE REAR.
5. WHEN ADEQUATE SHOULDER WIDTH IS NOT AVAILABLE, PROTECTION VEHICLE #1 SHOULD BE ELIMINATED.
6. ON HIGH-SPEED ROADWAYS, A THIRD PROTECTION VEHICLE SHOULD BE USED (i.e., VEHICLE #1 ON THE SHOULDER (IF PRACTICAL), VEHICLE #2 IN THE CLOSED LANE, AND VEHICLE #3 IN THE CLOSED LANE).
7. ARROW PANELS SHALL BE AS A MINIMUM TYPE B, 60" X 30" IN ACCORDANCE WITH THE CRITERIA PRESENTED IN THE MUTCD.
8. WORK SHOULD NORMALLY BE DONE DURING OFF-PEAK HOURS.
9. ALL TRAFFIC CONTROL ITEMS SHOWN ON THIS SHEET WILL NOT BE MEASURED FOR SEPARATE PAYMENT. THIS WORK IS TO BE INCLUDED IN THE PRICE BID FOR MAINTENANCE OF TRAFFIC.

MOBILE OPERATIONS ON TWO–LANE ROAD

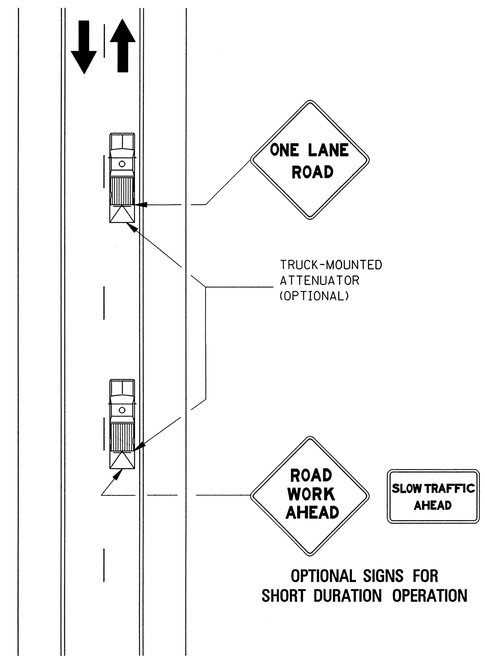

OPTIONAL SIGNS FOR
SHORT DURATION OPERATION

MOBILE OPERATIONS ON TWO–LANE ROAD

NOTES:

1. WHERE PRACTICAL AND WHEN NEEDED, THE WORK AND PROTECTION VEHICLES SHOULD PULL OVER PERIODICALLY TO ALLOW TRAFFIC TO PASS. IF THIS CAN NOT BE DONE FREQUENTLY, AS AN ALTERNATIVE, A "DO NOT PASS" SIGN MAY BE PLACED ON THE REAR OF THE VEHICLE BLOCKING THE LANE.
2. THE DISTANCE BETWEEN THE WORK AND PROTECTION VEHICLES MAY VARY ACCORDING TO TERRAIN, PAINT DRYING TIME, AND OTHER FACTORS. PROTECTION VEHICLES ARE USED TO WARN TRAFFIC OF THE OPERATION AHEAD. WHENEVER ADEQUATE STOPPING SIGHT DISTANCE EXISTS TO THE REAR, THE PROTECTION VEHICLE SHOULD MAINTAIN THE MINIMUM DISTANCE AND PROCEED AT THE SAME SPEED AS THE WORK VEHICLE. THE PROTECTION VEHICLE SHOULD SLOW DOWN IN ADVANCE OF VERTICAL OR HORIZONTAL CURVES THAT RESTRICT SIGHT DISTANCE.
3. ADDITIONAL PROTECTION VEHICLES TO WARN AND REDUCE THE SPEED OF ONCOMING OR OPPOSING TRAFFIC MAY BE USED. POLICE PATROL CARS MAY BE USED FOR THIS PURPOSE.
4. A TRUCK-MOUNTED ATTENUATOR (TMA) SHOULD BE USED ON THE PROTECTION VEHICLE AND MAY BE USED ON THE WORK VEHICLE.
5. THE WORK VEHICLE SHALL BE EQUIPPED WITH BEACONS, AND THE PROTECTION VEHICLES SHALL BE EQUIPPED WITH TWO HIGH-INTENSITY FLASHING LIGHTS MOUNTED ON THE REAR, ADJACENT TO THE SIGN. PROTECTION AND WORK VEHICLES SHOULD DISPLAY FLASHING OR ROTATING BEACONS BOTH FORWARD AND TO THE REAR.
6. VEHICLE-MOUNTED SIGNS SHALL BE MOUNTED WITH THE BOTTOM OF THE SIGN LOCATED AT A MINIMUM HEIGHT OF 48" ABOVE THE PAVEMENT. SIGN LEGENDS SHALL BE COVERED OR TURNED FROM VIEW WHEN WORK IS NOT IN PROGRESS.
7. ALL TRAFFIC CONTROL ITEMS SHOWN ON THIS SHEET WILL NOT BE MEASURED FOR SEPARATE PAYMENT. THIS WORK IS TO BE INCLUDED IN THE PRICE BID FOR MAINTENANCE OF TRAFFIC.

DATE	REVISION	BY
12-1-99	REVISED CAPTION △	S.W.R.

MISSISSIPPI DEPARTMENT OF TRANSPORTATION
ROADWAY DESIGN DIVISION
STANDARD PLAN

TRAFFIC CONTROL PLAN MOBILE OPERATIONS MULTILANE ROADS AND TWO–LANE ROADS

ENGLISH

WORKING NUMBER
TCP-11

ISSUE DATE: OCTOBER 1, 1998

SHEET NUMBER
260

STATE	PROJECT NO.
MISS.	

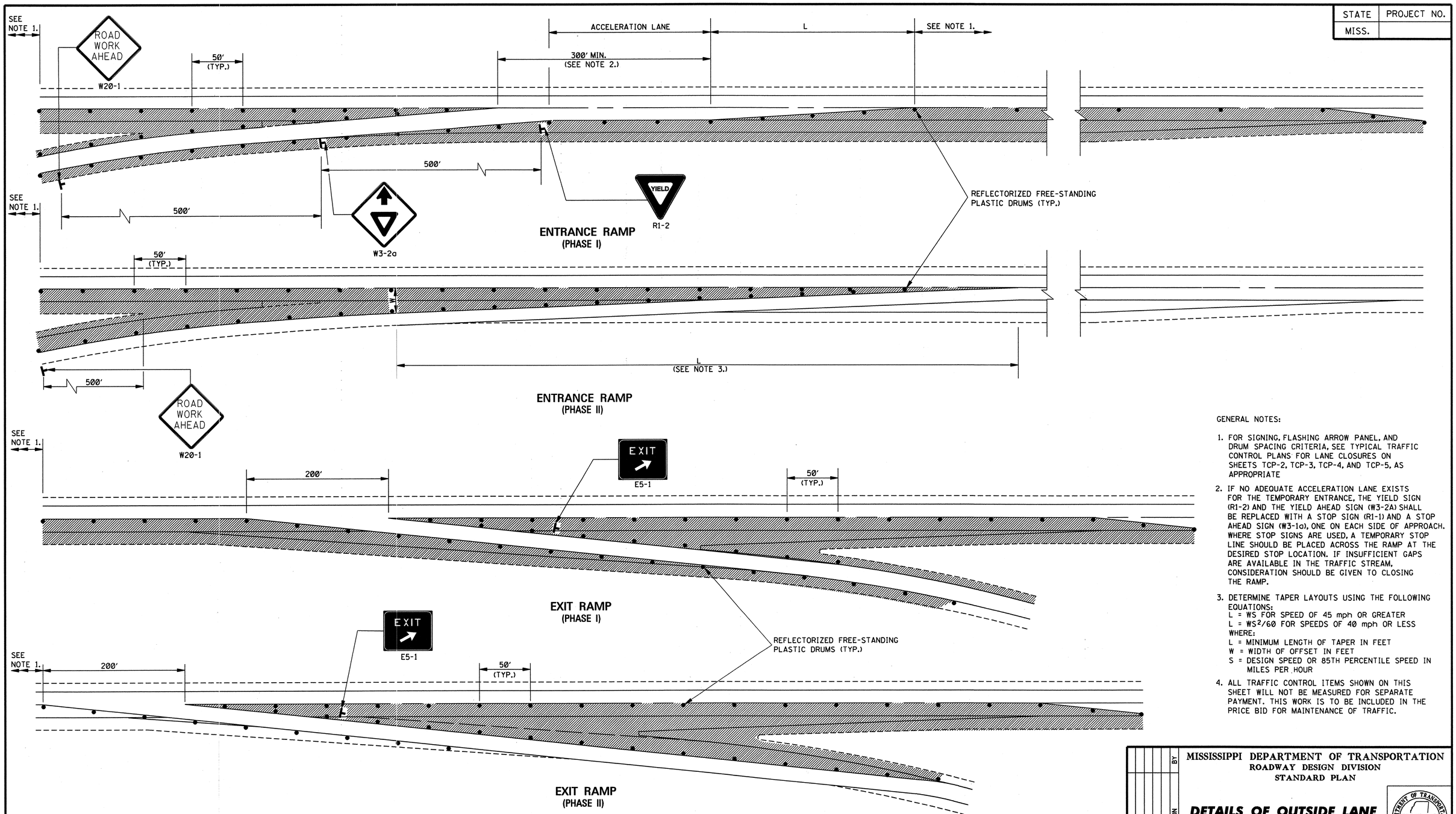

GENERAL NOTES:

1. FOR SIGNING, FLASHING ARROW PANEL, AND DRUM SPACING CRITERIA, SEE TYPICAL TRAFFIC CONTROL PLANS FOR LANE CLOSURES ON SHEETS TCP-2, TCP-3, TCP-4, AND TCP-5, AS APPROPRIATE
2. IF NO ADEQUATE ACCELERATION LANE EXISTS FOR THE TEMPORARY ENTRANCE, THE YIELD SIGN (R1-2) AND THE YIELD AHEAD SIGN (W3-2A) SHALL BE REPLACED WITH A STOP SIGN (R1-1) AND A STOP AHEAD SIGN (W3-1a), ONE ON EACH SIDE OF APPROACH. WHERE STOP SIGNS ARE USED, A TEMPORARY STOP LINE SHOULD BE PLACED ACROSS THE RAMP AT THE DESIRED STOP LOCATION. IF INSUFFICIENT GAPS ARE AVAILABLE IN THE TRAFFIC STREAM, CONSIDERATION SHOULD BE GIVEN TO CLOSING THE RAMP.
3. DETERMINE TAPER LAYOUTS USING THE FOLLOWING EQUATIONS:
   $L = WS$ FOR SPEED OF 45 mph OR GREATER
   $L = WS^2/60$ FOR SPEEDS OF 40 mph OR LESS
   WHERE:
   L = MINIMUM LENGTH OF TAPER IN FEET
   W = WIDTH OF OFFSET IN FEET
   S = DESIGN SPEED OR 85TH PERCENTILE SPEED IN MILES PER HOUR
4. ALL TRAFFIC CONTROL ITEMS SHOWN ON THIS SHEET WILL NOT BE MEASURED FOR SEPARATE PAYMENT. THIS WORK IS TO BE INCLUDED IN THE PRICE BID FOR MAINTENANCE OF TRAFFIC.

DATE	REVISION	BY

MISSISSIPPI DEPARTMENT OF TRANSPORTATION
ROADWAY DESIGN DIVISION
STANDARD PLAN

DETAILS OF OUTSIDE LANE CLOSURE AT EXIT AND ENTRANCE RAMPS

ENGLISH

WORKING NUMBER TCP-12

ISSUE DATE: OCTOBER 1, 1998

SHEET NUMBER 261

STATE	PROJECT NO.
MISS.	

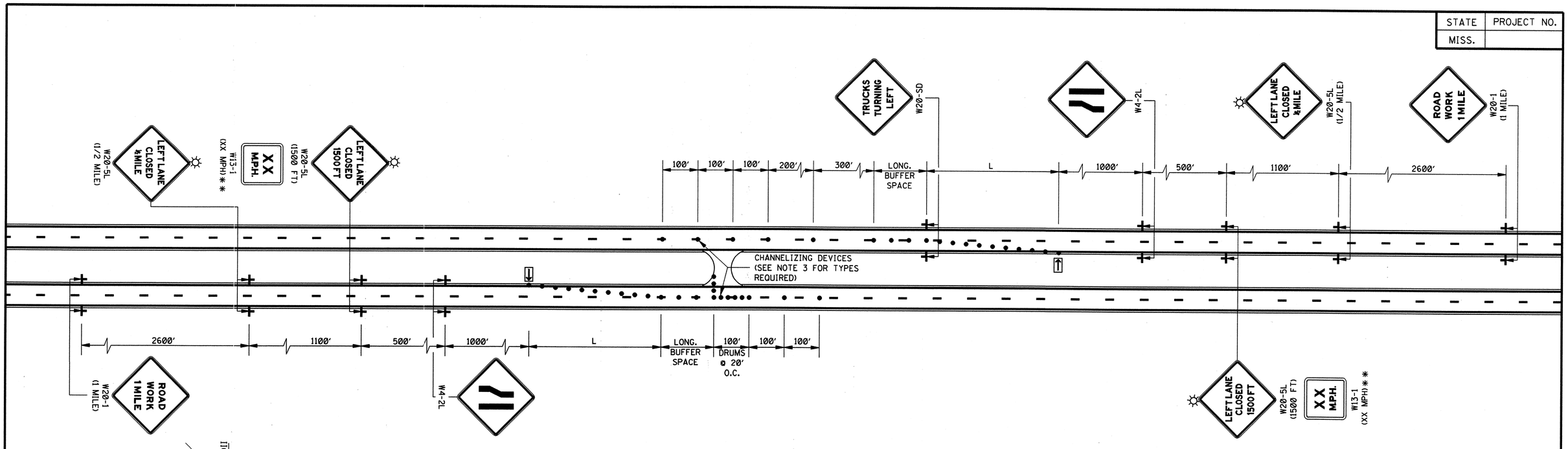

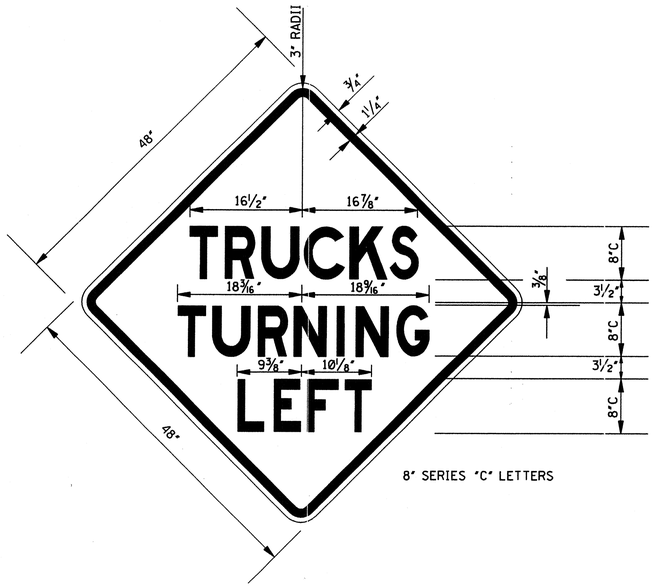

DETAIL OF W20–SD

LEGEND

** THE LEGEND ON W13-1 (XX MPH) SUPPLEMENTAL PLATE SHALL BE 10 MPH LESS THAN THE POSTED SPEED LIMIT.

FLASHING ARROW PANEL (TYPE "C")

● REFLECTORIZED FREE-STANDING PLASTIC DRUMS

TYPE "B" WARNING LIGHTS

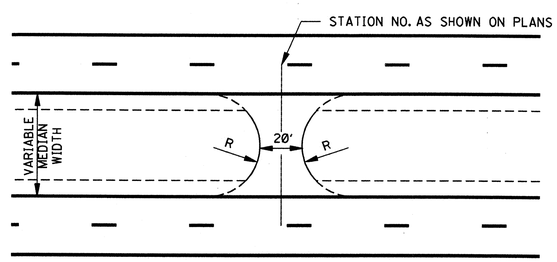

DETAIL OF TEMPORARY CROSSOVER

NOTE: R = 0.5 (MEDIAN WIDTH)

GENERAL NOTES:

1. THE LOCATION OF CHANNELIZING DEVICES AND THE WORK AREA LAYOUT SHALL BE BASED ON THE CRITERIA IN THE FOLLOWING TABLE:

POSTED SPEED AND/OR DESIGN SPEED	MAXIMUM CHANNELIZING DEVICE SPACING (ft)		MINIMUM LONGITUDINAL BUFFER SPACE (ft)	TAPER † RATES
	TAPER	ALONG LANE LINE & WORK ZONE		
mph				
≤40	40	80	170	27:1
45	45	90	220	45:1
50	50	100	280	50:1
55	55	110	335	55:1
60	60	120	415	60:1
65	65	130	485	65:1
70	70	140	575	70:1

† NOTE: TAPER RATES ARE DETERMINED USING THE FOLLOWING EQUATIONS:
$L = WS$ FOR SPEEDS OF 45 mph OR GREATER
$L = WS^2/60$ FOR SPEEDS OF 40 mph OR LESS
WHERE: L = MINIMUM LENGTH OF TAPER IN FEET
W = WIDTH OF OFFSET (USUALLY LANE WIDTH) IN FEET
S = DESIGN SPEED OR 85TH PERCENTILE SPEED IN MILES PER HOUR

2. FLASHING ARROW PANEL SHALL BE AS LEVEL AS POSSIBLE AS APPROVED BY THE ENGINEER. FLASHING ARROW PANEL SHOULD BE LOCATED AT THE BEGINNING OF THE TAPER OR, IF THE SHOULDER IS TOO NARROW, BEHIND THE CHANNELIZING DEVICES IN THE CLOSED LANE.
3. ALL CHANNELIZING DEVICES SHALL BE REFLECTORIZED FREE STANDING PLASTIC DRUMS.
4. ALL TRAFFIC CONTROL ITEMS SHOWN ON THIS SHEET WILL NOT BE MEASURED FOR SEPARATE PAYMENT. THIS WORK IS TO BE INCLUDED IN THE PRICE BID FOR MAINTENANCE OF TRAFFIC.
5. DIAMOND SHAPED TRAFFIC CONTROL SIGNS SHALL BE A MINIMUM OF 48" X 48".
6. LOCATION OF CROSSOVERS WILL BE AS SHOWN ON THE PLANS OR AS DIRECTED BY THE ENGINEER.
7. USE OF CROSSOVER SHALL BE LIMITED TO TRUCKS APPROACHING FROM ONE DIRECTION ONLY.
8. REVERSE LAYOUT OF TAPERS, DRUMS AND SIGNS TO ACCOMMODATE TRUCKS APPROACHING FROM OPPOSITE DIRECTION.
9. EACH CONSTRUCTION CROSSOVER SHALL BE CLOSED AS DIRECTED BY THE ENGINEER OR WHEN THE CONSTRUCTION OPERATION, ZONE OR SIGNS ENCROACH ON OR INTERFERES WITH THE OPERATION OF THE CONSTRUCTION CROSSOVER. THE CROSSOVER SHALL BE CLOSED USING 24' OF TYPE III BARRICADE (DOUBLE FACED).

DATE	REVISION	BY

MISSISSIPPI DEPARTMENT OF TRANSPORTATION
ROADWAY DESIGN DIVISION
STANDARD PLAN

TRAFFIC CONTROL PLAN FOR TEMPORARY CONSTRUCTION CROSSOVER
(WORK DAY ONLY)

ENGLISH

WORKING NUMBER TCP-13

ISSUE DATE: OCTOBER 1, 1998

SHEET NUMBER 262

STATE	PROJECT NO.
MISS.	

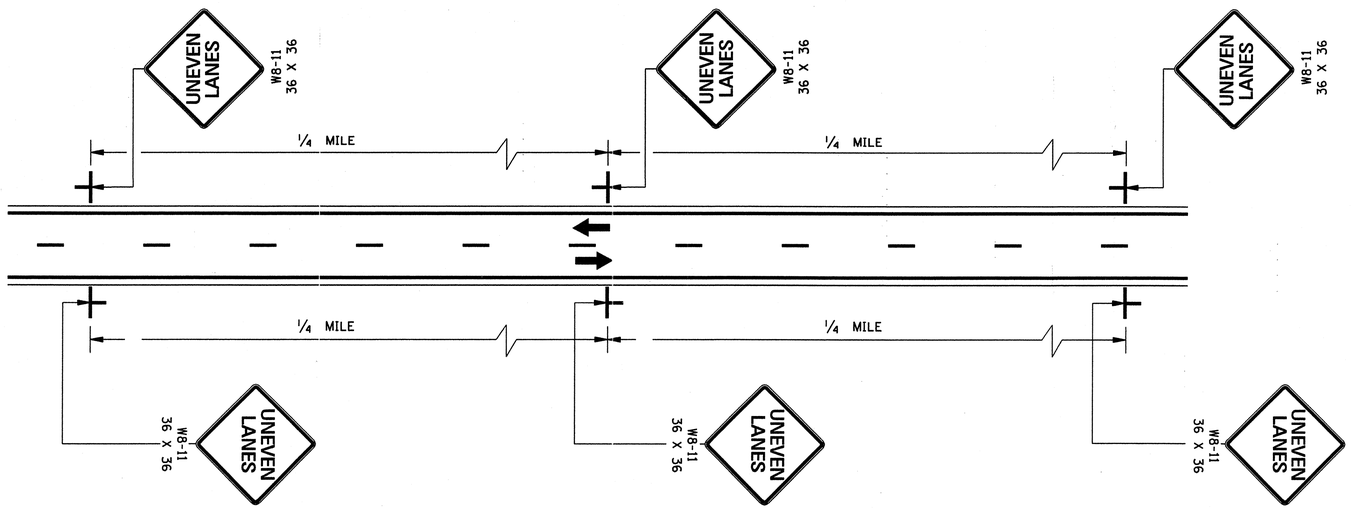

TWO-WAY TRAFFIC

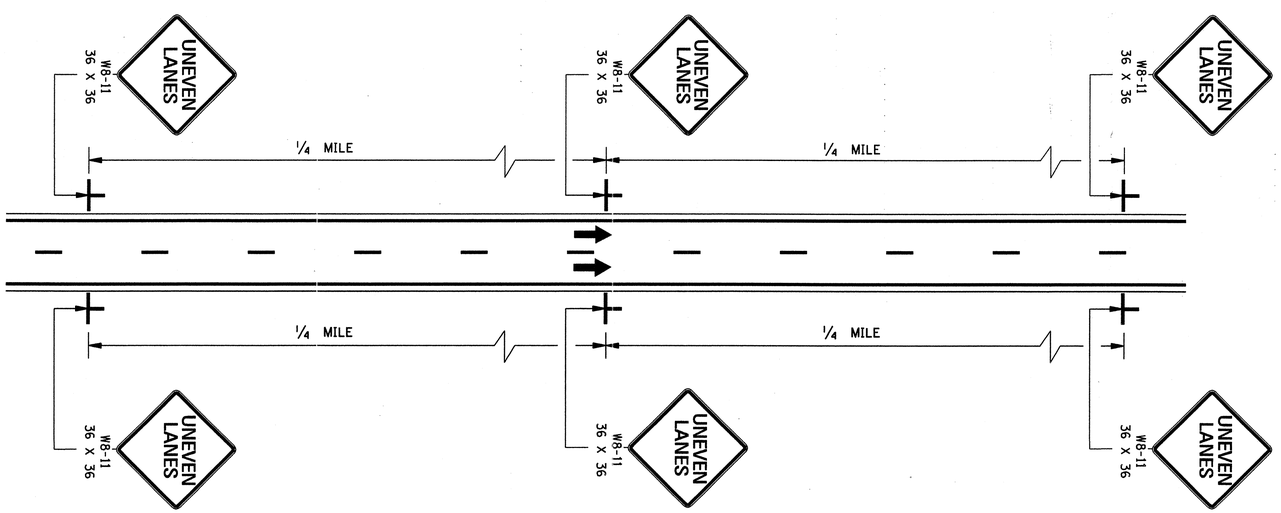

ONE-WAY TRAFFIC

GENERAL NOTES:

1. UNEVEN LANE LINE:
   A. IF LESS THAN OR EQUAL TO 1½", NO SIGNS REQUIRED.
   B. IF GREATER THAN 1½" AND LESS THAN OR EQUAL TO 2¼", PLACE SIGNS AS SHOWN ON THIS SHEET.
   C. IF GREATER THAN 2¼", TRAFFIC SHOULD NOT BE ALLOWED TO CROSS UNEVEN LANE LINE.
2. ALL TRAFFIC CONTROL ITEMS SHOWN ON THIS SHEET SHALL BE PAID FOR UNDER MAINTENANCE OF TRAFFIC.
3. THE W8-11 SIGNS SHALL BE SPACED AT 1/4-MILE INTERVALS THROUGHOUT UNEVEN LANE LINE LIMITS.

DATE	REVISION	BY

MISSISSIPPI DEPARTMENT OF TRANSPORTATION
ROADWAY DESIGN DIVISION
STANDARD PLAN

TRAFFIC CONTROL PLANS
UNEVEN PAVEMENT DETAILS

ENGLISH

WORKING NUMBER
TCP-14

ISSUE DATE: OCTOBER 1, 1998

SHEET NUMBER
263

STATE	PROJECT NO.
MISS.	

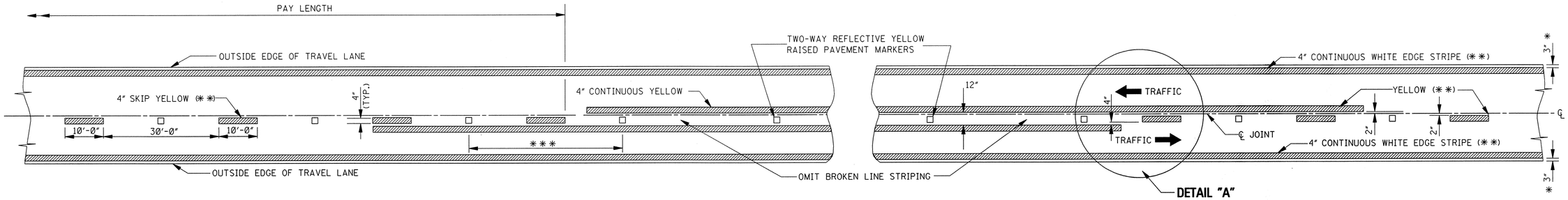

TWO-WAY TRAFFIC
(ASPHALT OR CONCRETE PAVEMENT)

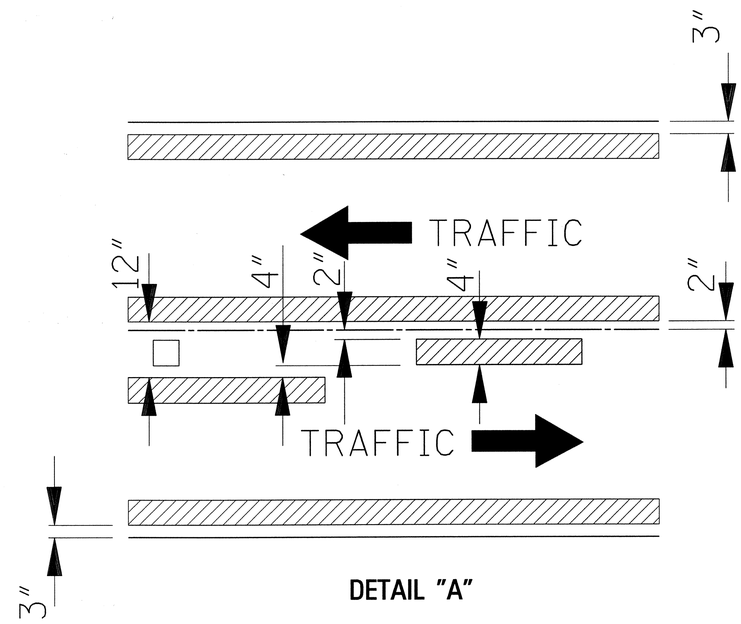

DETAIL "A"

GENERAL NOTES:

* 1. 3" UNLESS SHOWN ELSEWHERE ON THE PLANS.

** 2. EDGE STRIPE SHALL BE SAME MATERIAL AS LANE-LINE STRIPE (PAINT OR TAPE AS INDICATED IN PAY ITEMS).

*** 3. SPACING OF REFLECTIVE RAISED PAVEMENT MARKERS IS AS FOLLOWS:

	URBAN AREA (ft-in)	RURAL AREA (ft-in)
TANGENT SECTIONS	40'-0"	80'-0"
HORIZONTAL CURVES	40'-0"	40'-0"
INTERCHANGE LIMITS	40'-0"	† 40'-0"

† NOTE: ON THE MAIN FACILITY, REFLECTIVE RED-CLEAR RAISED PAVEMENT MARKERS ON A 40'-0" SPACING WILL BE REQUIRED ON LANE-LINE(S) THROUGH ALL INTERCHANGE AREAS BEGINNING 1000' IN ADVANCE (IN DIRECTION OF TRAFFIC) OF THE EXIT RAMP TAPER AND CONTINUING THROUGH THE INTERCHANGE TO THE END OF THE ENTRANCE RAMP TAPER.

4. PAVEMENT MARKERS SHALL BE HIGH PERFORMANCE REFLECTIVE RAISED PAVEMENT MARKERS AS LISTED IN THE MDOT "APPROVED SOURCES OF MATERIALS."

5. REFLECTIVE RAISED PAVEMENT MARKERS TO BE USED IF TEMPORARY MARKINGS ARE TO REMAIN IN PLACE OVER 3 MONTHS

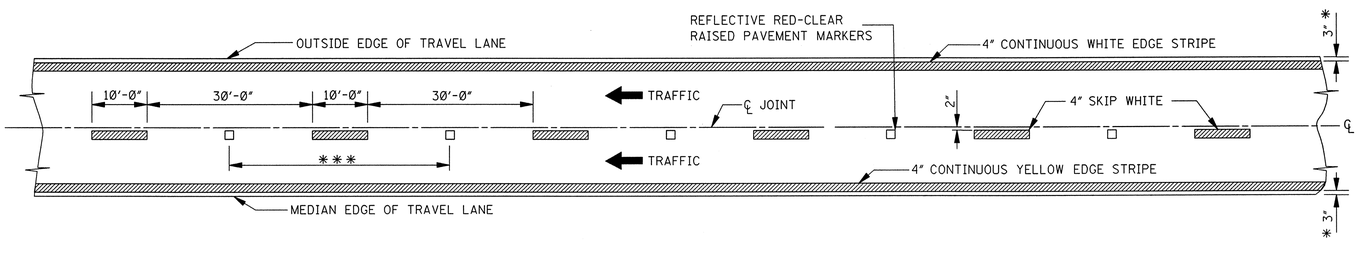

4-LANE WITH ONE-WAY TRAFFIC

DATE	REVISION	BY

MISSISSIPPI DEPARTMENT OF TRANSPORTATION
ROADWAY DESIGN DIVISION
STANDARD PLAN

TEMPORARY STRIPING FOR TRAFFIC CONTROL 2-LANE AND 4-LANE DIVIDED HIGHWAYS

DEPARTMENT OF TRANSPORTATION ENGLISH MISSISSIPPI

WORKING NUMBER TCP-15

ISSUE DATE: DECEMBER 1, 1999

SHEET NUMBER 264

STATE	PROJECT NO.
MISS.	

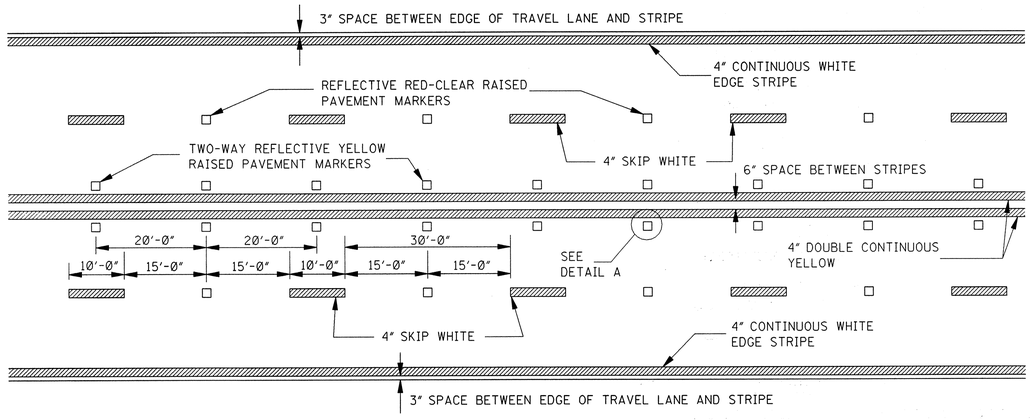

TYPICAL STRIPING AND RAISED PAVEMENT MARKERS FOR 4–LANE SECTION

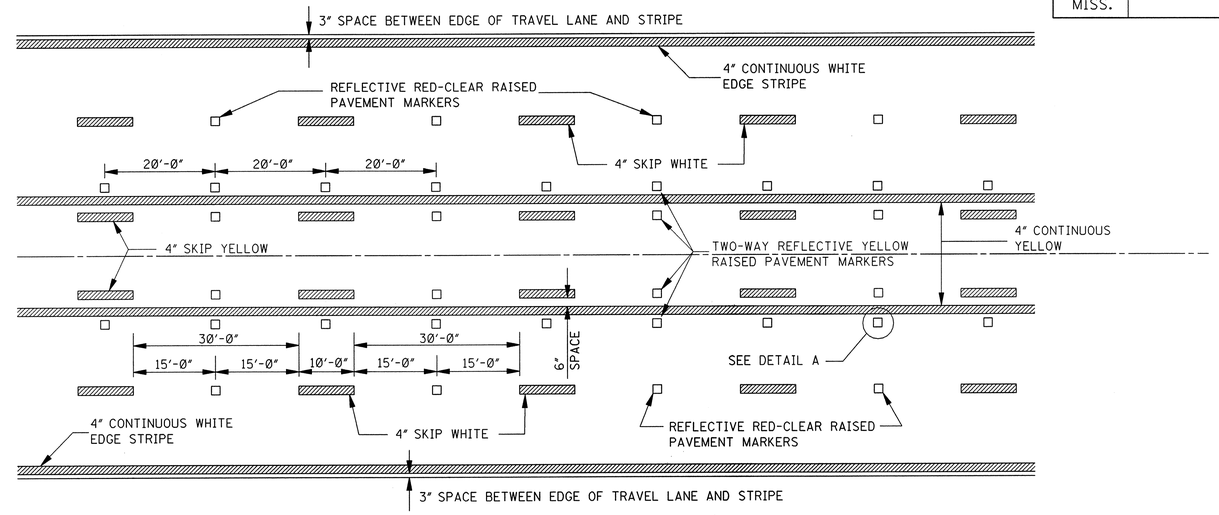

TYPICAL STRIPING AND RAISED PAVEMENT MARKERS FOR 5–LANE SECTION

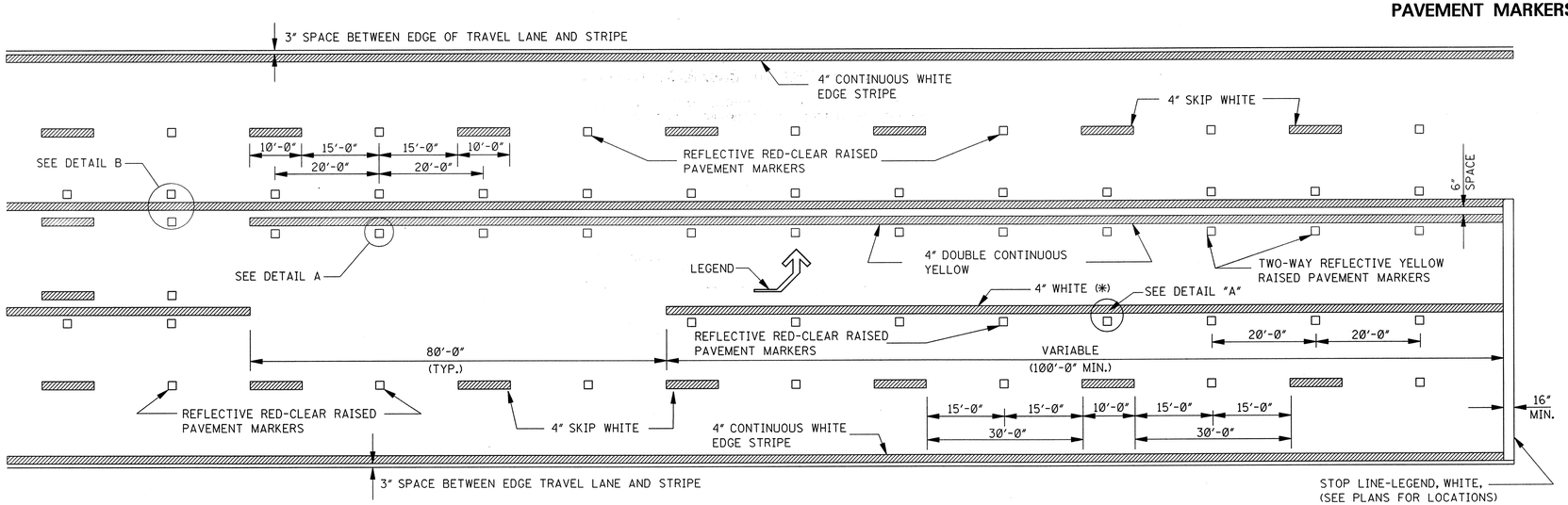

TYPICAL STRIPING AND RAISED PAVEMENT MARKERS AT LEFT TURN LANES

*NOTE: USE DETAIL STRIPING IF LENGTH ≤ 150' AT THIS LOCATION, OTHERWISE USE CONTINUOUS STRIPING.

DETAIL A
LATERAL PLACEMENT OF PAVEMENT MARKERS

GENERAL NOTE:

1. PAVEMENT MARKERS SHALL BE HIGH PERFORMANCE RAISED PAVEMENT MARKERS AS LISTED IN THE MDOT "APPROVED SOURCES OF MATERIALS".
2. REFLECTIVE RAISED PAVEMENT MARKERS TO BE USED IF TEMPORARY MARKINGS ARE TO REMAIN IN PLACE OVER 3 MONTHS
3. TEMPORARY TURN ARROW TO BE PAID FOR AS TEMPORARY TRAFFIC STRIPE (LEGEND), ESTIMATED AT 10.9 SQ. FT. PER ARROW

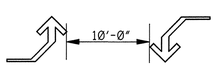

TYPICAL TWO–WAY ARROW INSTALLATION

NOTES: 1. CONSIDER EACH SEGMENT OF CONTINUOUS TWO-WAY LEFT TURN LANE SEPARATELY.
2. IF SEGMENT IS LESS THAN 350', PLACE ONE SET OF ARROWS IN CENTER OF SEGMENT.
3. IF SEGMENT IS GREATER THAN 350', PLACE FIRST SET OF ARROWS 50' TO 100'. FROM BEGINNING AND/OR END OF SEGMENT AND SPACE ADDITIONAL SETS OF ARROWS (250' O.C.).

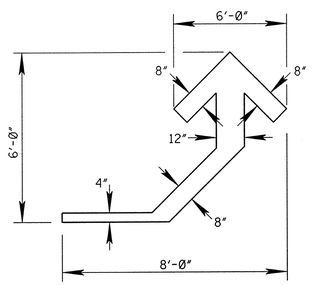

DETAIL OF TEMPORARY TURN ARROW

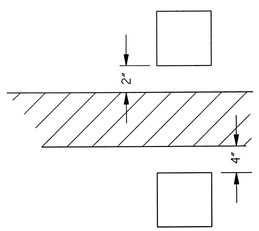

DETAIL B
LATERAL PLACEMENT OF PAVEMENT MARKERS

DATE	REVISION	BY

MISSISSIPPI DEPARTMENT OF TRANSPORTATION
ROADWAY DESIGN DIVISION
STANDARD PLAN

TEMPORARY STRIPING FOR TRAFFIC CONTROL 4–LANE AND 5–LANE UNDIVIDED ROADWAYS

ENGLISH

WORKING NUMBER TCP-16

ISSUE DATE: DECEMBER 1, 1999

SHEET NUMBER 265

STATE	PROJECT NO.
MISS.	

TYPE I MARKER
(ALTERNATE NO. 1)

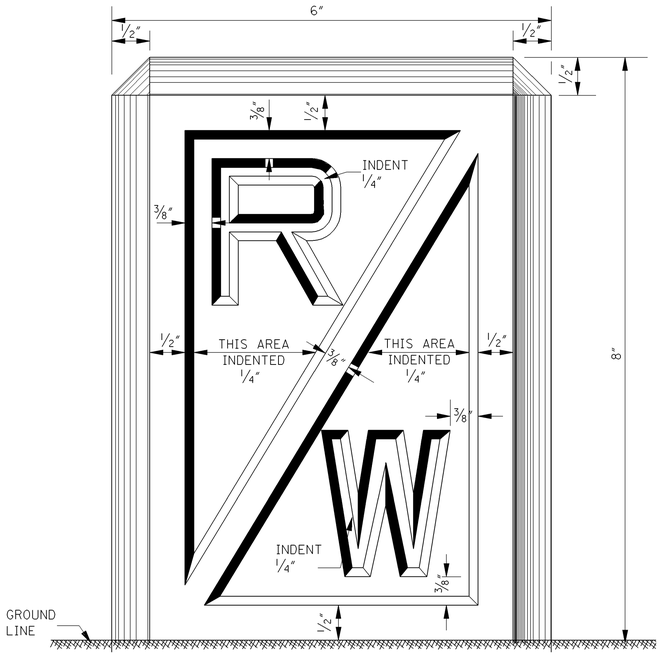

FACE OF MARKER

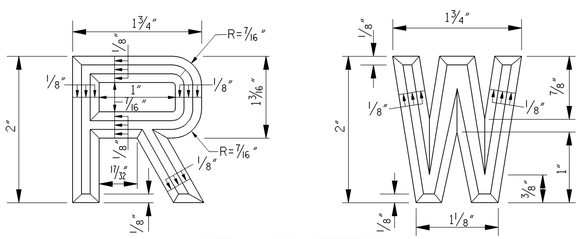

DETAIL OF LETTERS

TYPE I MARKER
(ALTERNATE NO. 2)

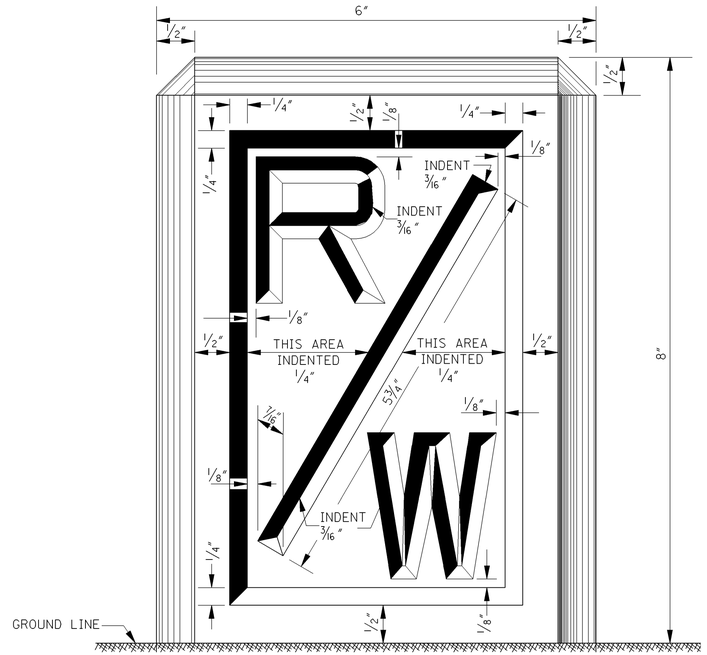

FACE OF MARKER

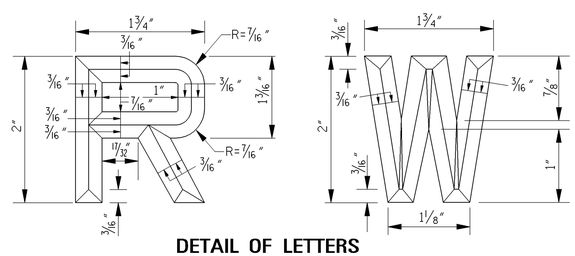

DETAIL OF LETTERS

TYPE II MARKER
(FLUSH TYPE FOR USE IN BUILT–UP AREAS)

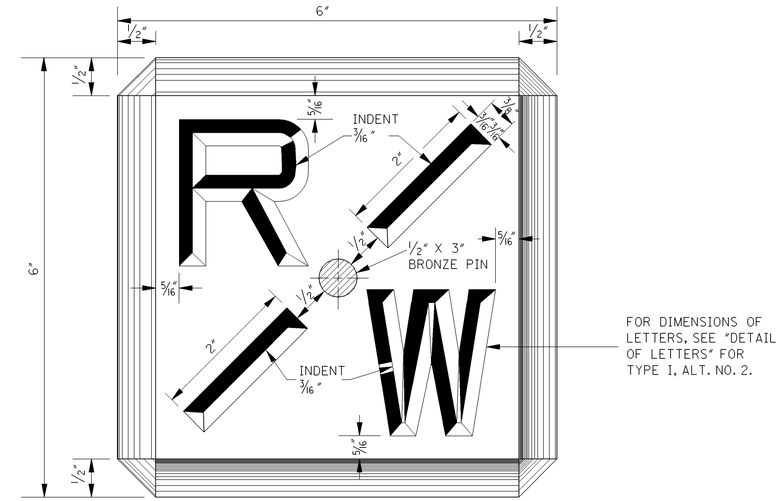

TOP OF MARKER

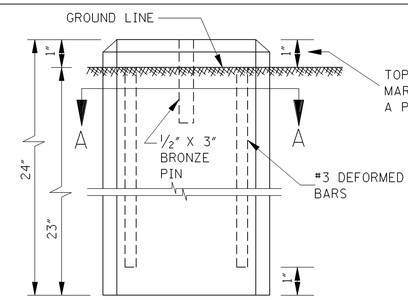

ELEVATION

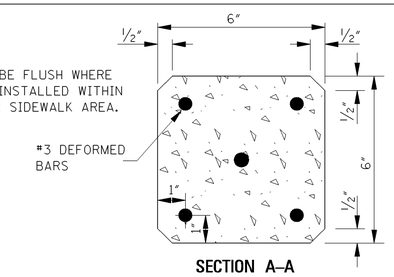

SECTION A–A

REINFORCING AND INSTALLATION DETAILS

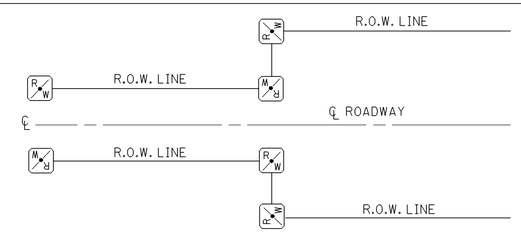

PLAN

MARKER ARRANGEMENT FOR ADDITIONAL RIGHT–OF–WAY

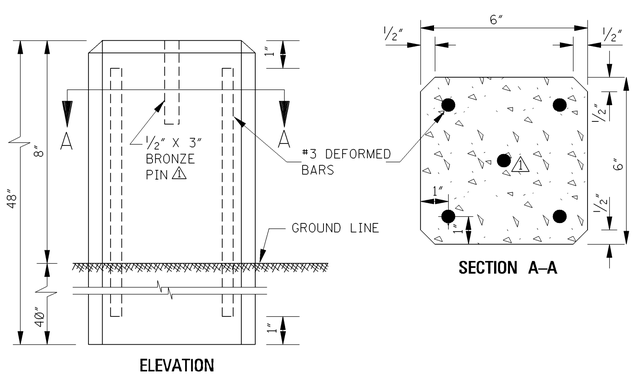

ELEVATION

SECTION A–A

REINFORCING AND INSTALLATION DETAILS

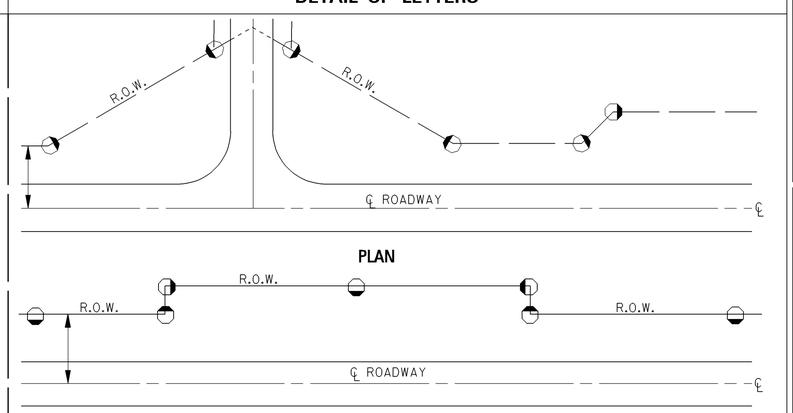

PLAN

MARKER ARRANGEMENT FOR ADDITIONAL RIGHT–OF–WAY

GENERAL NOTES:

1. THE CONCRETE SHALL HAVE A MINIMUM CEMENT CONTENT OF 470 LBS OF CEMENT PER CUBIC YARD OF CONCRETE.
2. THE MARKERS SHALL BE PLACED AS INDICATED ELSEWHERE ON PLANS.

DATE	REVISION	BY
3-01-02	ADDED BRONZE PIN	S.W.R.

MISSISSIPPI DEPARTMENT OF TRANSPORTATION
ROADWAY DESIGN DIVISION
STANDARD PLAN

RIGHT–OF–WAY MARKER

ENGLISH

WORKING NUMBER RW-1

ISSUE DATE: OCTOBER 1, 1998

SHEET NUMBER 270

STATE	PROJECT NO.
MISS.	

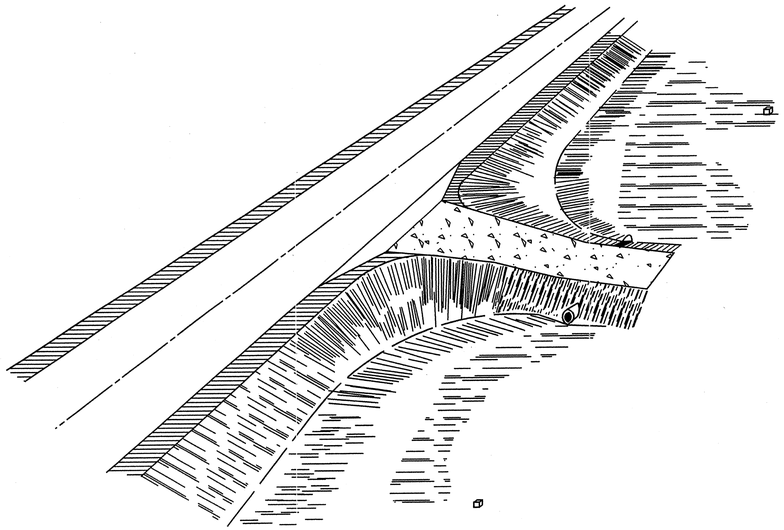

RAMP IN FILL SECTION

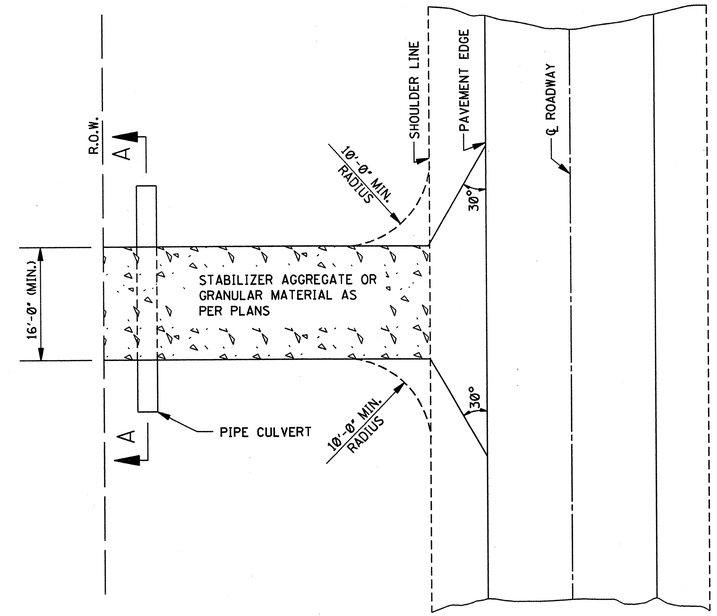

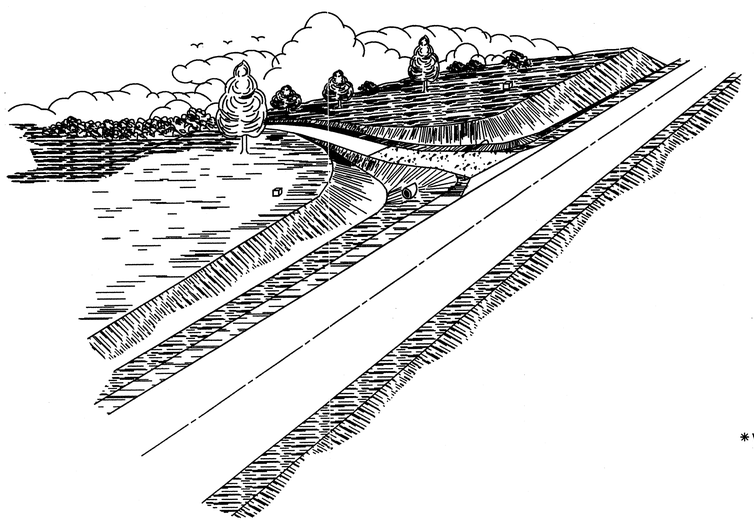

RAMP IN CUT SECTION

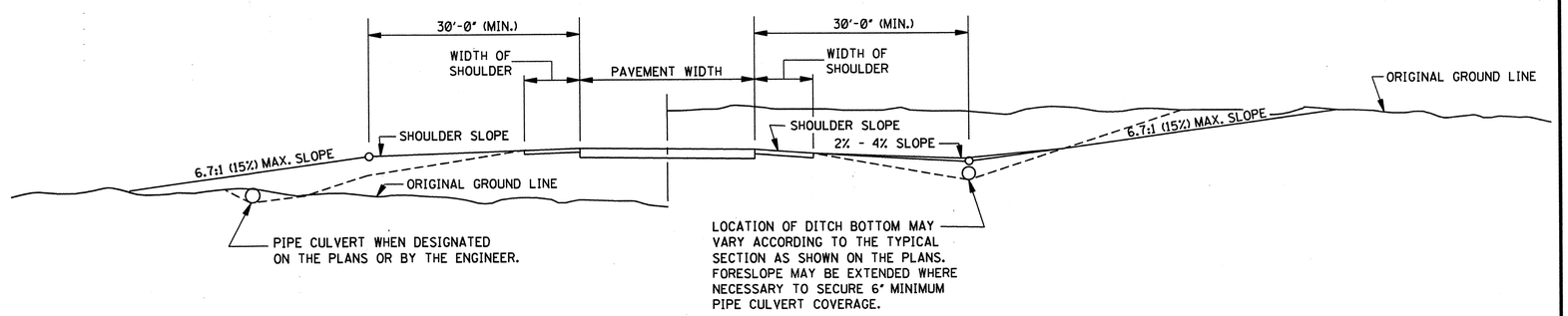

TYPICAL SECTION AT RAMP

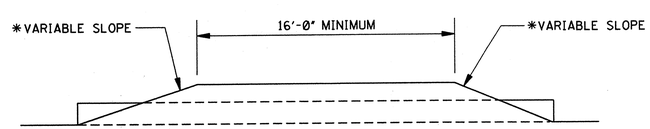

SECTION A–A

*DRIVEWAY SIDE SLOPES

WITHIN CLEAR ZONE	V ≥ 50 mph - DES. 10:1 MAX 6:1 V ≤ 45 mph - MAX. 3:1
OUTSIDE CLEAR ZONE	MAXIMUM - 3:1

DATE	REVISION	BY

MISSISSIPPI DEPARTMENT OF TRANSPORTATION
ROADWAY DESIGN DIVISION
STANDARD PLAN

RURAL DRIVEWAYS

DEPARTMENT OF TRANSPORTATION ENGLISH MISSISSIPPI

WORKING NUMBER RD-1

ISSUE DATE: OCTOBER 1, 1998

SHEET NUMBER 271

STATE	PROJECT NO.
MISS.	

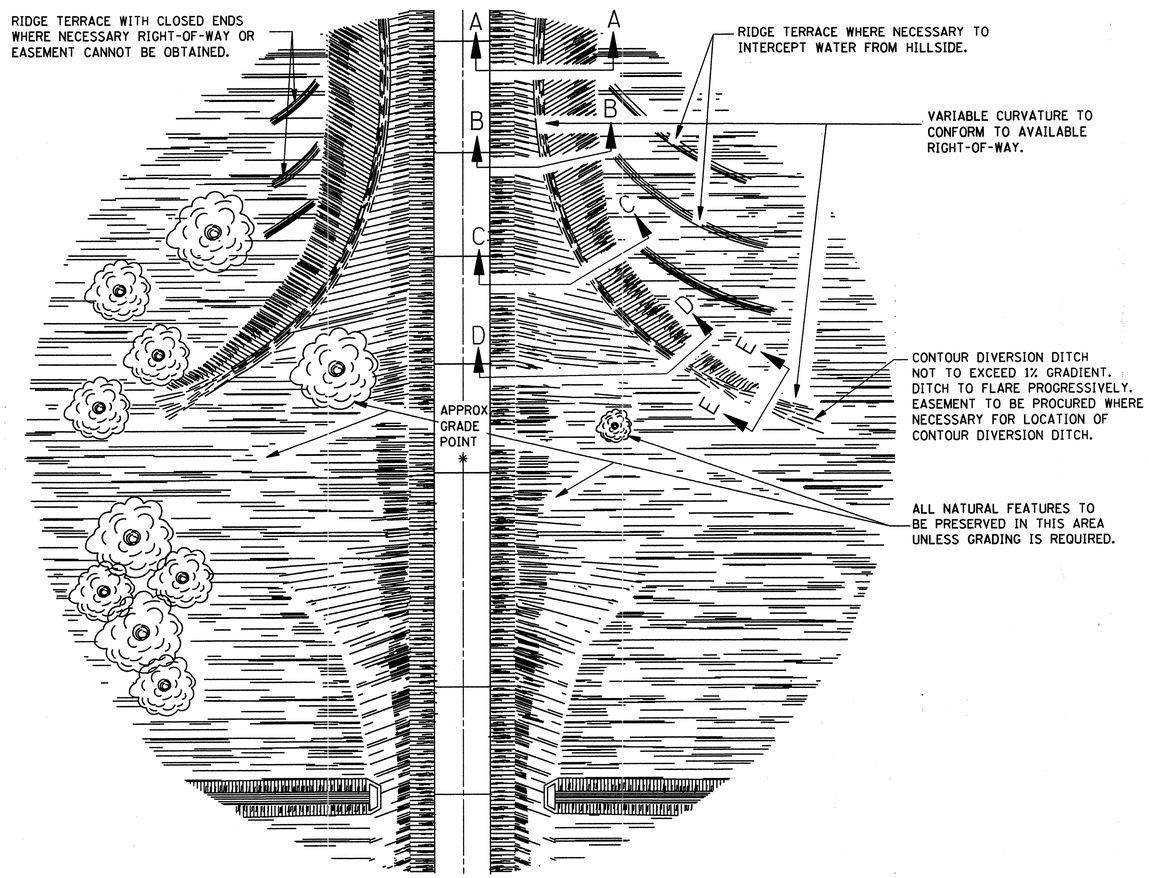

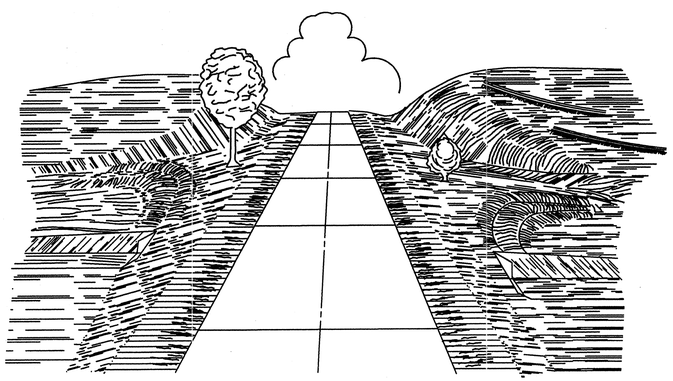

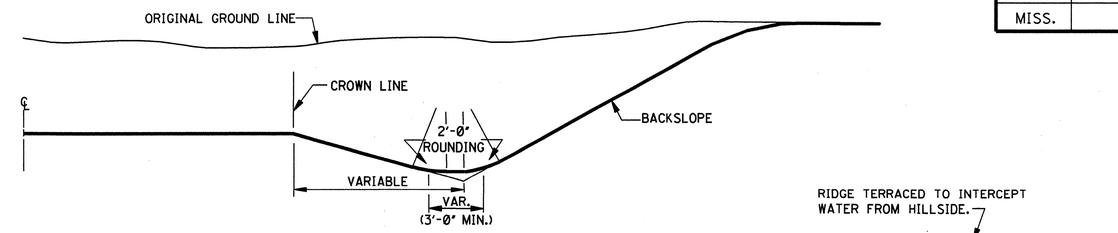

SECTION A–A

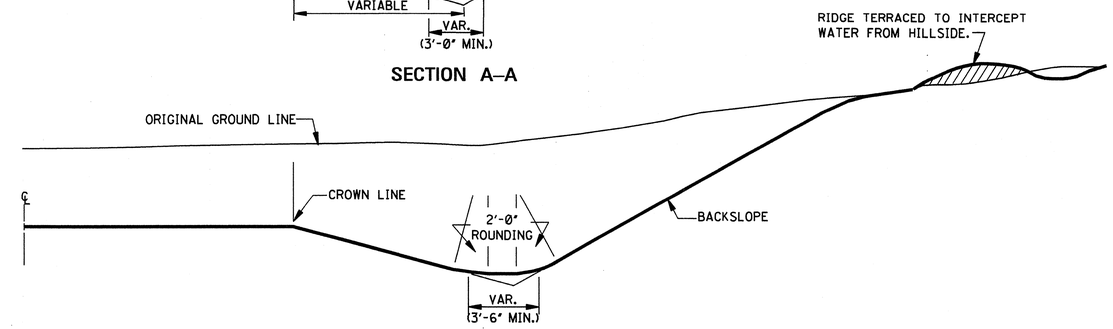

SECTION B–B

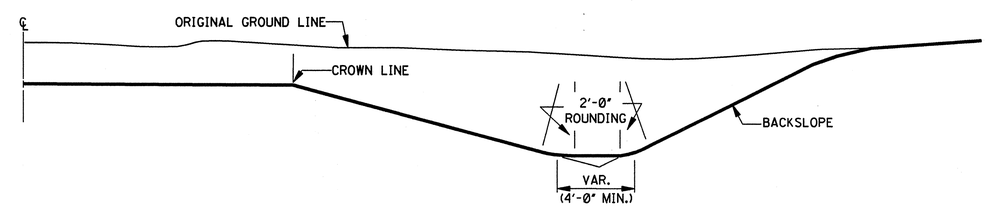

SECTION C–C

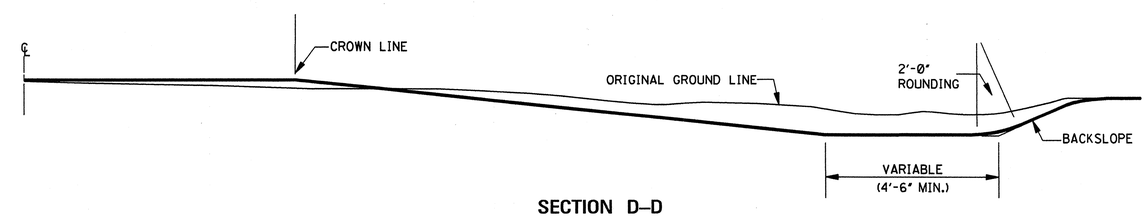

SECTION D–D

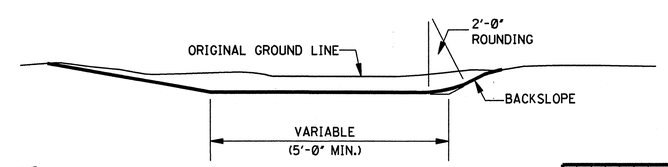

SECTION E–E

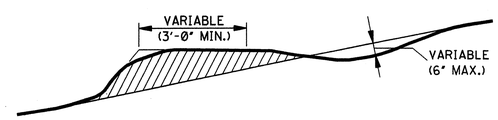

RIDGE TERRACE

NOTE: RIDGE TERRACES SHALL BE SPACED 4'-0" VERTICALLY ON SLOPES STEEPER THAN 3:1 AND 3'-0" VERTICALLY ON SLOPES FLATTER THAN 3:1. TERRACES ARE TO BE USED WHERE NECESSARY TO INTERCEPT WATER FROM HILLSIDES.

DATE	REVISION	BY

MISSISSIPPI DEPARTMENT OF TRANSPORTATION
ROADWAY DESIGN DIVISION
STANDARD PLAN

TYPICAL GRADING TRANSITION BETWEEN CUTS AND FILLS

ENGLISH

WORKING NUMBER GT-1

ISSUE DATE: OCTOBER 1, 1998

SHEET NUMBER 272

STATE	PROJECT NO.
MISS.	

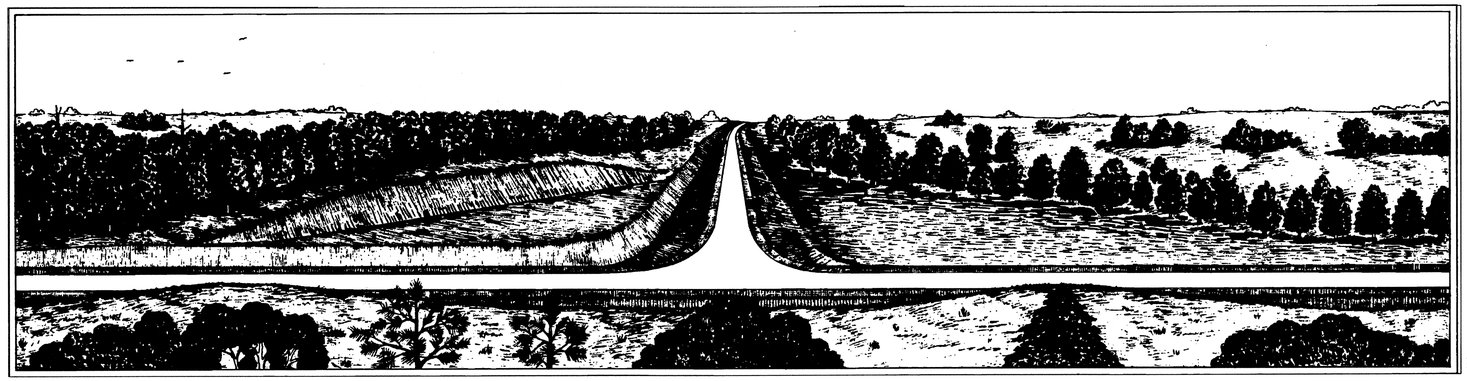

PERSPECTIVE OF TYPICAL DAYLIGHTING AT INTERSECTION IN CUT AND FILL

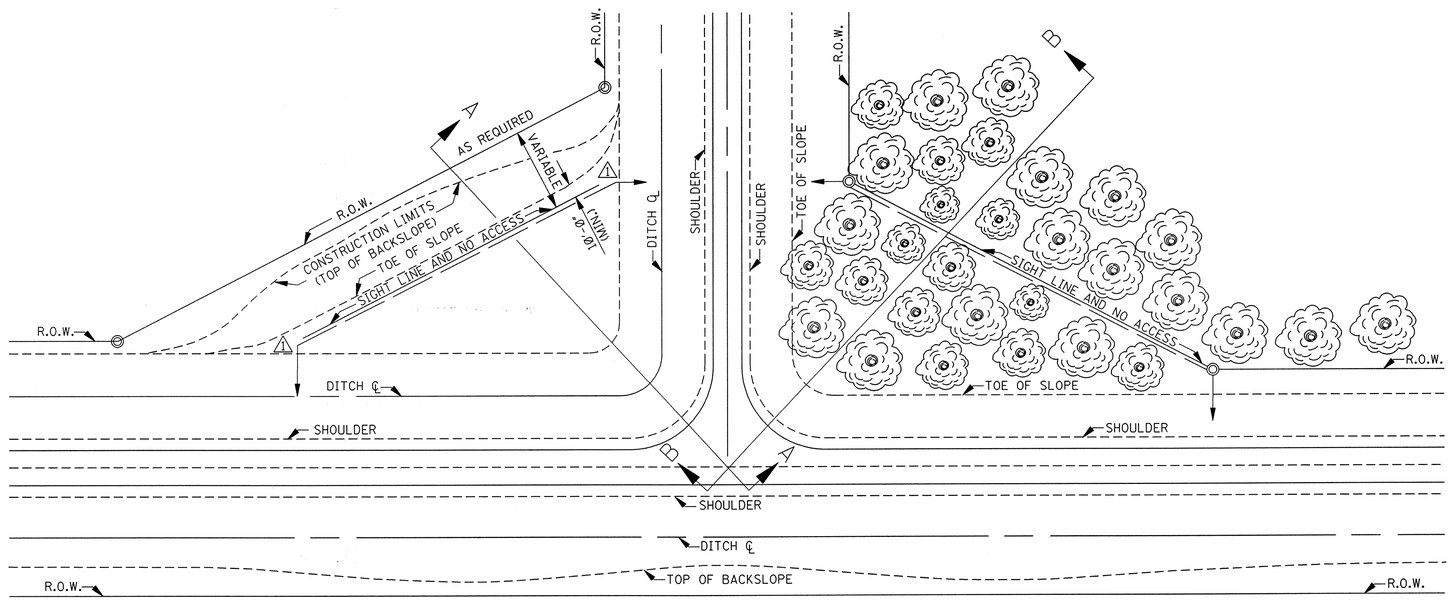

PLAN

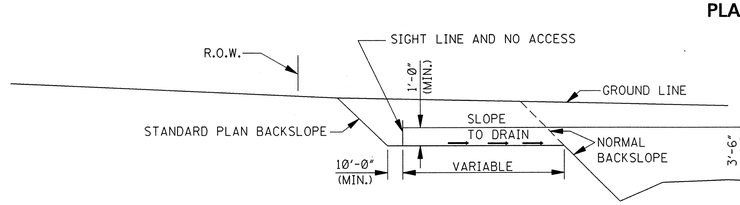

SECTION A–A

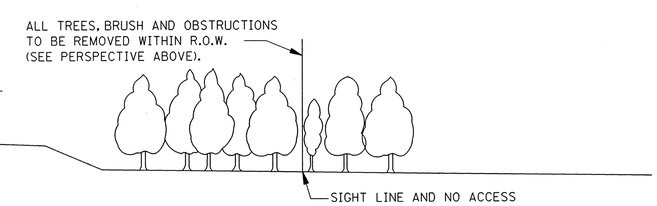

SECTION B–B

DATE	REVISION	BY
12-1-99	REVISED R.O.W. MARKER	S.W.R.

MISSISSIPPI DEPARTMENT OF TRANSPORTATION
ROADWAY DESIGN DIVISION
STANDARD PLAN

SIGHT FLARE

ENGLISH

WORKING NUMBER SF-1

ISSUE DATE: OCTOBER 1, 1998

SHEET NUMBER 273

STATE	PROJECT NO.
MISS.	

AREA TO BE RIP-RAPPED INDICATED THUS:

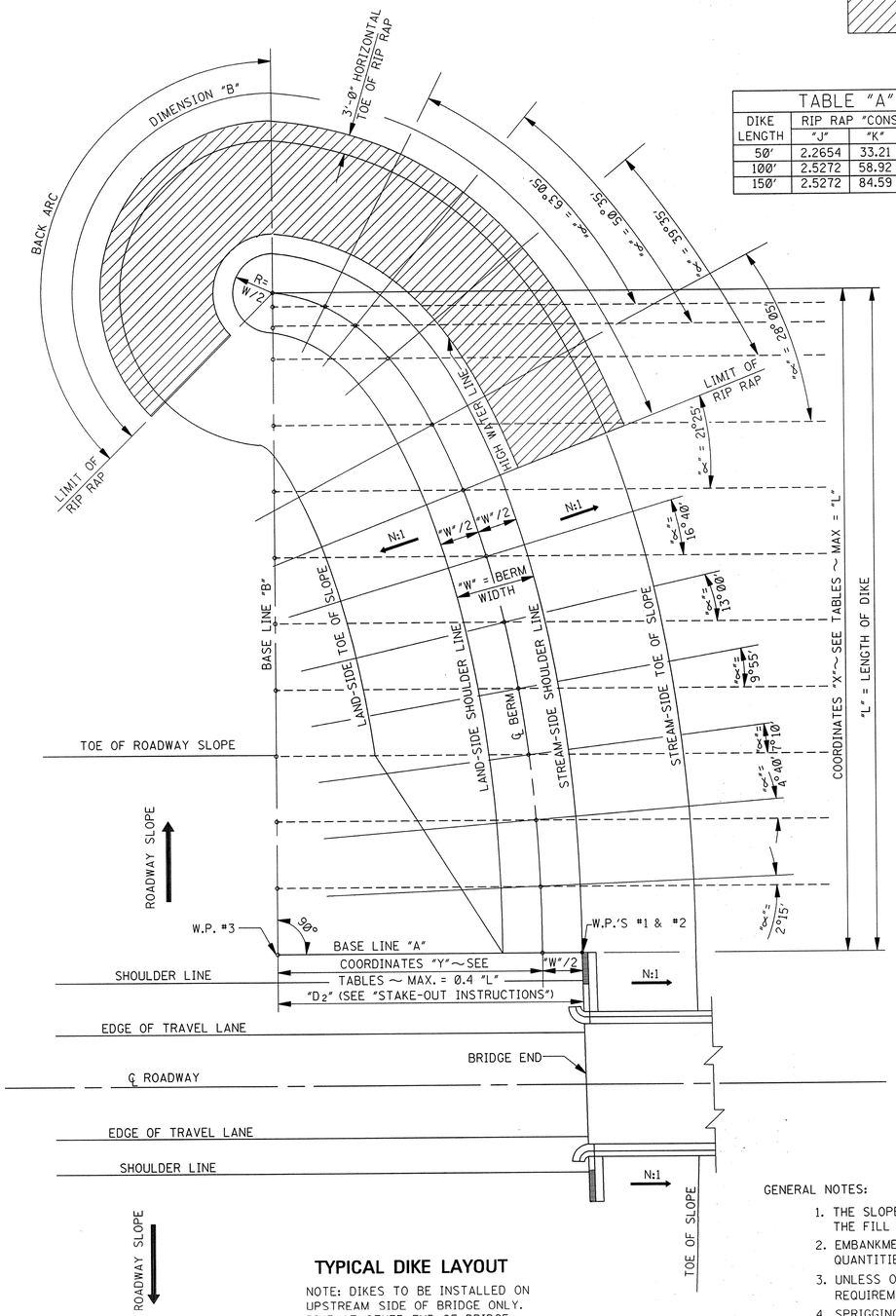

TYPICAL DIKE LAYOUT

NOTE: DIKES TO BE INSTALLED ON UPSTREAM SIDE OF BRIDGE ONLY. DIKE AT OTHER END OF BRIDGE SAME EXCEPT OPPOSITE HAND.

TABLE "A"			
DIKE LENGTH	RIP RAP "CONSTANTS"		
	"J"	"K"	"P"
50'	2.2654	33.21	3.40
100'	2.5272	58.92	3.79
150'	2.5272	84.59	3.79

50' DIKE	
BERM WIDTH, "W" = 10' BACK ARC = 120° "L" = 50'	
COORDINATES (ft)	
"X"	"Y"
0.00	20.00
5.00	19.90
10.00	19.60
15.00	19.08
20.00	18.33
25.00	17.32
30.00	16.00
35.00	14.28
40.00	12.00
45.00	8.72
47.50	6.25
49.00	3.98
50.00	0.00

100' DIKE	
BERM WIDTH, "W" = 12' BACK ARC = 135° "L" = 100'	
COORDINATES (ft)	
"X"	"Y"
0.00	40.00
10.00	39.80
20.00	39.19
30.00	38.16
40.00	36.66
50.00	34.64
60.00	32.00
70.00	28.57
80.00	24.00
90.00	17.44
95.00	12.49
98.00	7.96
100.00	0.00

150' DIKE	
BERM WIDTH, "W" = 15' BACK ARC = 135° "L" = 150'	
COORDINATES (ft)	
"X"	"Y"
0.00	60.00
15.00	59.70
30.00	58.79
45.00	57.24
60.00	54.99
75.00	51.96
90.00	48.00
105.00	42.85
120.00	36.00
135.00	26.15
142.50	18.74
147.00	11.94
150.00	0.00

TO ESTIMATE THE QUANTITY OF EMBANKMENT MATERIAL:

THE VOLUME OF EMBANKMENT MATERIAL, IN CUBIC YARDS, IS DETERMINED BY THE FOLLOWING FORMULA:

$$V = 0.0426\ [(L)\ (H)\ (W+(N)\ (H))]$$

WHERE "L" IS THE DIKE LENGTH, IN FEET; "H" IS THE DIFFERENCE IN ELEVATIONS OF THE BERM AND THE AVERAGE GROUND LEVEL; "W" IS THE BERM WIDTH, IN FEET; AND N:1 IS THE DIKE SLOPE.

TO ESTIMATE THE QUANTITY OF RIP RAP:

DIMENSION "B" GIVES THE LENGTH ALONG THE STREAM-SIDE FACE AT ANY DISTANCE, "H", BELOW THE BERM, AND IS MEASURED FROM THE LINE WHERE ∝= 21°25' AROUND THE END TO THE "BACK ARC" RIP RAP LIMIT. IT IS DETERMINED BY THE FOLLOWING FORMULA:

$$B = [(J)\ (N)\ (H)] + K$$

WHERE "J" & "K" ARE CONSTANTS, FROM TABLE "A", AND N:1 IS THE DIKE SLOPE.

THE AREA OF RIP RAP IS DETERMINED AS FOLLOWS:

A. FIND THE MEAN LENGTH AT MID-HEIGHT OF THE RIP RAP SECTION = [(LENGTH AT HIGH WATER ELEVATION) + (LENGTH AT AVERAGE GROUND ELEVATION) / 2].
B. MULTIPLY THE DIFFERENCE IN ELEVATIONS OF HIGH WATER AND AVERAGE GROUND LEVEL BY "M" (FOR 2:1 SLOPE, M = 2.236: FOR 3:1 SLOPE, M = 3.162) TO FIND THE SLANT HEIGHT ON SLOPE.
C. AREA OF RIP RAP ON SLOPE = [(MEAN LENGTH) (SLANT HEIGHT)], IN SQUARE FEET.
D. FIND THE MEAN LENGTH OF THE THREE FOOT HORIZONTAL TOE PORTION = [(LENGTH AT AVERAGE GROUND LEVEL) + ("P" FROM TABLE "A")]
E. AREA OF TOE PORTION = MEAN LENGTH (FROM D) x 3, IN SQUARE FEET
F. TOTAL RIP RAP AREA = [(SLOPE AREA) + (TOE AREA)].

HAVING TOTAL RIP RAP AREA, THE QUANTITY OF LOOSE RIP RAP MAY BE ESTIMATED AT 120 lbs/ft²/ft OF DEPTH.

STAKE OUT INSTRUCTIONS:

1. W.P. #1 IS LOCATED AT THE LAND-SIDE CORNER OF THE UPSTREAM END BENT WING WALL, UNLESS OTHERWISE SPECIFIED. ESTABLISH BASE LINE "A" PASSING THRU W.P. #1 AND PARALLEL TO ℄ ROADWAY. WHERE ℄ ROADWAY IS ON HORIZONTAL CURVE, BASE LINE "A" IS PARALLEL TO THE TANGENT OF ℄ ROADWAY AT ℄ JOINT (OR END OF SPAN) AT BRIDGE END. WHERE SKEWED DIKE IS REQUIRED, ROTATE BASE LINE "A" ABOUT W.P. #1 THRU THE ANGLE OF SKEW.

2A. UNLESS OTHERWISE SPECIFIED, ASSUME THE BERM ELEVATION, "E_B", TO BE EQUAL TO THE ROADWAY SLOPE ELEVATION, "E_S", AT W.P. #1. IN ALL CASES WHERE $E_B = E_S$, W.P. #2 COINCIDES WITH W.P. #1 AS SHOWN IN "TYPICAL DIKE LAYOUT." FOR BRIDGES WHERE ELEVATIONS "E_S" ARE NOT THE SAME AT BOTH BRIDGE ENDS, SET ELEVATION "E_B" FOR BOTH DIKES EQUAL TO THE LOWER GRADE.

2B. FOR DIKES WHERE THE BERM IS TO BE SET AT AN ELEVATION, "E_B", OTHER THAN ELEVATION "E_S", ESTABLISH W.P. #2 ALONG BASE LINE "A" A DISTANCE, "D_1", STREAMWARD (LANDWARD, IF "D" IS NEGATIVE) FROM W.P. #1, WHERE:

$$D_1 = N(E_S - E_B)$$

AND N:1 IS THE DIKE SLOPE. SEE DETAIL "A" BELOW.

3. MEASURE LANDWARD FROM W.P. #2 ALONG BASE LINE "A" A DISTANCE, "D_2", TO ESTABLISH W.P. #3, THE ZERO OF BASE LINE "B", WHERE:

$$D_2 = \frac{W}{2} + Y_0,$$

"W" IS THE BERM WIDTH, AND "Y_0" IS THE DISTANCE "Y" GIVEN IN THE TABLES FOR "X" = 0.

4. AT W.P. #3, TURN 90° UPSTREAM FROM BASE LINE "A" TO ESTABLISH BASE LINE "B". LOCATE THE "X" COORDINATES ALONG BASE LINE "B" AND, AT RIGHT ANGLES TO BASE LINE "B" THRU THESE POINTS, MEASURE CORRESPONDING "Y" COORDINATES TO ESTABLISH POINTS ON ℄ BERM.

5. AT EACH POINT THUS OBTAINED ON ℄ BERM, TURN CORRESPONDING ANGLE, "∝", AND SET:
   (A) STREAM-SIDE SHOULDER LINE, AT HALF THE BERM WIDTH FROM ℄ BERM.
   (B) STREAM-SIDE TOE OF SLOPE, FROM THE PRECEDING POINT.
   (C) LAND-SIDE SHOULDER LINE, AT HALF THE BERM WIDTH FROM ℄ BERM.
   (D) LAND-SIDE TOE OF SLOPE, FROM THE PRECEDING POINT.

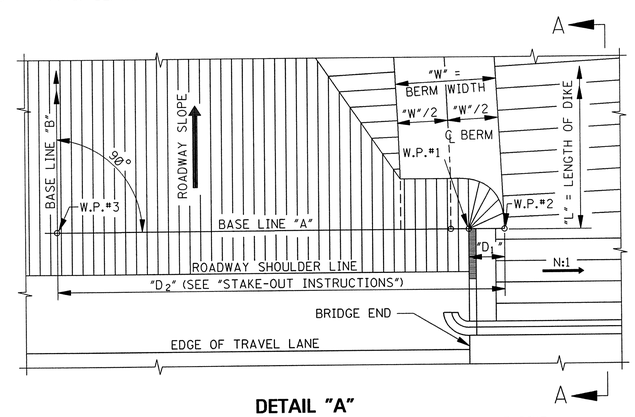

DETAIL "A"

NOTE: SHOWING LOCATION OF WORKING POINTS FOR STAKING OUT DIKE WHEN BERM ELEVATION (E_B) IS BELOW SLOPE ELEVATION (E_S) AT W.P. #1.

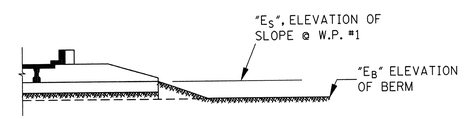

SECTION A–A

GENERAL NOTES:

1. THE SLOPE OF THE DIKE EMBANKMENT SHALL BE THE SAME AS THE SLOPE (N:1) OF THE FILL UNDER THE BRIDGE UNLESS SPECIFIED OTHERWISE ON BRIDGE LAYOUT SHEET.
2. EMBANKMENT MATERIAL FOR EARTH DIKES WILL BE INCLUDED IN EXCAVATION QUANTITIES AS SHOWN ON THE PLANS.
3. UNLESS OTHERWISE NOTED ON THE PLANS AND/OR TO MEET OTHER CONTRACT REQUIREMENTS, RIP RAP SHALL BE REQUIRED ON ALL EARTH DIKES AS SHOWN HEREON.
4. SPRIGGING, WHEN REQUIRED, WILL BE INCLUDED IN REGULAR ROADWAY SPRIGGING QUANTITIES.
5. SODDING, WHEN REQUIRED, WILL BE INCLUDED IN REGULAR ROADWAY SODDING QUANTITIES.
6. THE RIP-RAP SIZE AND MINIMUM DEPTH FOR RIP-RAP TREATMENT ARE AS FOLLOWS:

RIP-RAP SIZE & MINIMUM DEPTH	
DEPTH (MIN.) (in)	RIP-RAP SIZE (lbs)
12"	100
18"	300

DATE	REVISION	BY
12-1-99	REVISE NOTES	S.W.R.

MISSISSIPPI DEPARTMENT OF TRANSPORTATION
ROADWAY DESIGN DIVISION
STANDARD PLAN

SPUR DIKE: EARTH

DEPARTMENT OF TRANSPORTATION ENGLISH MISSISSIPPI

WORKING NUMBER ED-1

ISSUE DATE: OCTOBER 1, 1998

SHEET NUMBER 274

STATE	PROJECT NO.
MISS.	

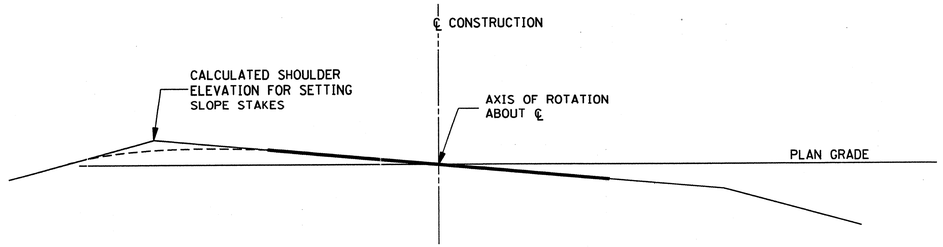

FULL SUPERELEVATED SECTION

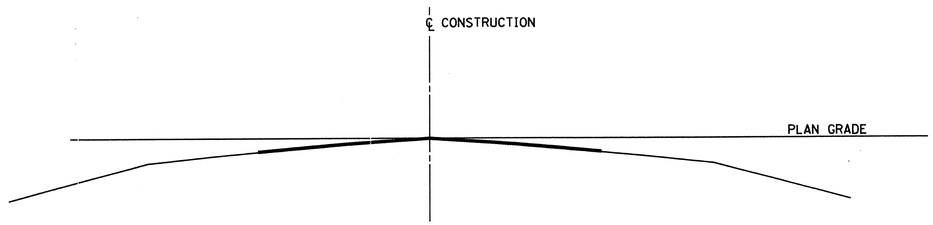

NORMAL TANGENT SECTION

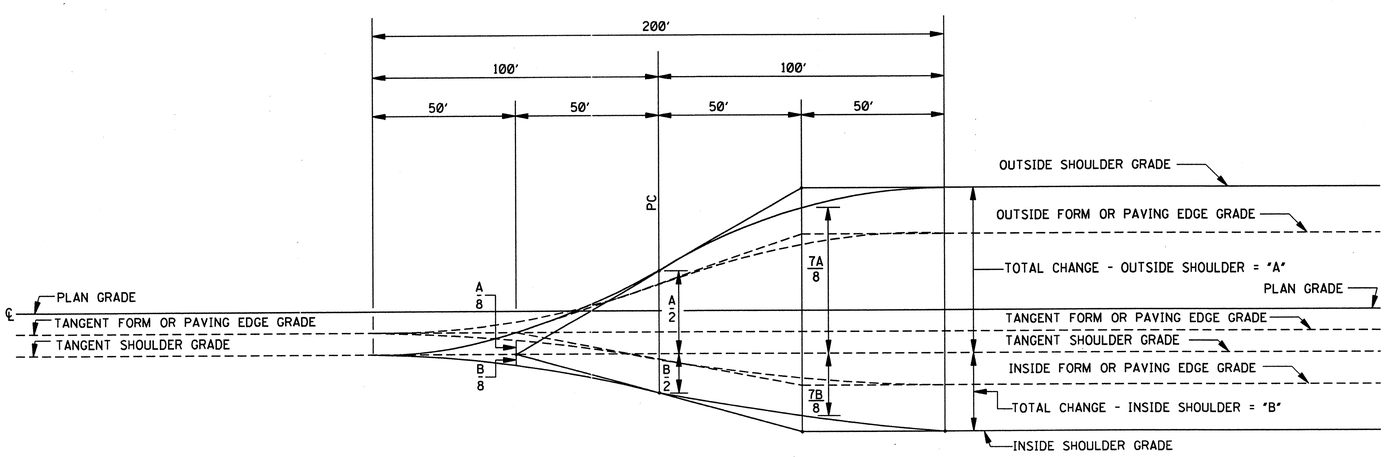

*D	V = 30 mph	V = 40 mph
	e	e
0°15'	NC	NC
0°30'	NC	NC
0°45'	NC	NC
1°00'	NC	NC
1°30'	NC	.021
2°00'	RC	.028
2°30'	.021	.034
3°00'	.025	.040
3°30'	.029	.046
4°00'	.033	.051
5°00'	.040	.061
6°00'	.046	.070
7°00'	.053	.078
8°00'	.058	.084
9°00'	.063	.089
10°00'	.068	.094
11°00'	.072	.097
12°00'	.076	.099
13°00'	.080	.100
14°00'	.083	D_{max} = 13°15'
16°00'	.089	
18°00'	.093	
20°00'	.097	
22°00'	.099	
24°00'	.100	
	D_{max} = 24°45'	

e_{max} = 10%

KEY:
D = DEGREE OF CURVE
V = DESIGN SPEED (mph)
e = FULL SUPERELEVATION RATE (%)
NC = NORMAL CROWN (2% CROSS SLOPE)
RC = REVERSE CROWN; SUPERELEVATE AT NORMAL CROSS SLOPE (2%)

*NOTE: FOR DEGREE OF CURVE INTERMEDIATE BETWEEN TABLE VALUES, USE A STRAIGHT-LINE INTERPOLATION TO DETERMINE THE SUPERELEVATION RATE.

*EXTRA WIDTH TABLE FOR TRAVELED WAY

DEGREE OF CURVE "D"	EXTRA WIDTH (ft)		
	20' SURF. WIDTH	22' SURF. WIDTH	24' SURF. WIDTH
>2°	0	0	0
2°-3°	2.0	0	0
4°-5°	2.5	0	0
6°-8°	3.0	2.0	0
9°-11°	3.5	2.5	0
≤ 11°	4.0	3.0	0

*NOTE: EXTRA WIDTH TO BE ADDED ON INSIDE OF CURVE. THE SPECIFIED EXTRA WIDTH TO BE ADDED AT UNIFORM RATE THROUGHOUT SUPERELEVATION RUNOFF (L). CENTERLINE STRIPE SHOULD EQUALLY DIVIDE SURFACED WIDTH.

GENERAL NOTES:

1. THIS SHEET ONLY APPLIES TO LOCAL ROAD FACILITIES IN RESTRICTED LOCATIONS (V ≤ 40 mph) AND TO DETOURS.
2. IT IS SUGGESTED THAT BOTH SHOULDER GRADE & FORM GRADE CORRECTIONS FOR SUPERELEVATION RUNOFF BE DETERMINED GRAPHICALLY. USE STANDARD CROSS SECTION SHEET WITH HORIZONTAL SCALE 1"=20' AND VERTICAL SCALE 1"=1'. CONNECT CONTROL POINTS WITH FLEXIBLE CURVE. CORRECTIONS CAN BE READ AT ANY POINT.
3. STATE AID DIVISION: USE STANDARD SA-SE-1.

DATE	REVISION	BY

MISSISSIPPI DEPARTMENT OF TRANSPORTATION
ROADWAY DESIGN DIVISION
STANDARD PLAN

SUPERELEVATION TRANSITION FOR LOCAL FACILITIES
(V ≤ 40 mph)

ENGLISH

WORKING NUMBER SE-1

ISSUE DATE: OCTOBER 1, 1998

SHEET NUMBER 275

STATE	PROJECT NO.
MISS.	

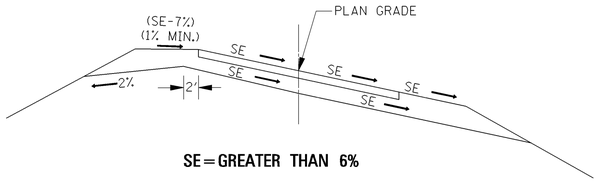

SE = GREATER THAN 6%

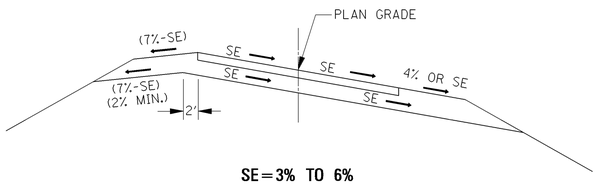

SE = 3% TO 6%

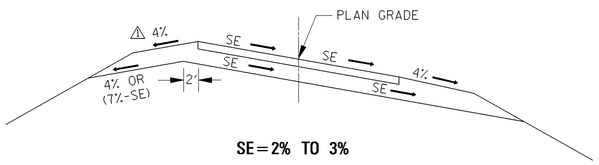

SE = 2% TO 3%

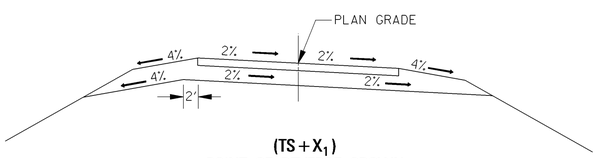

(TS + X_1)
POINT OF REVERSE CROWN

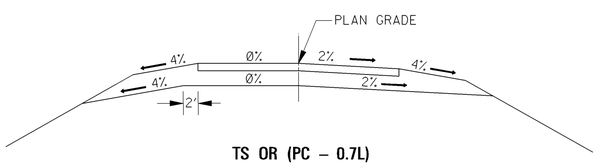

TS OR (PC – 0.7L)

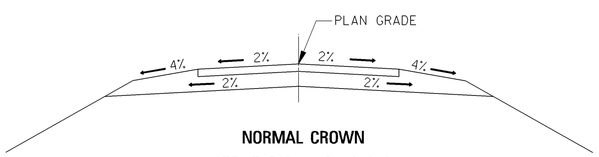

NORMAL CROWN

NOTE: TYPCIAL, OR AS SHOWN ELSEWHERE ON PLANS.

DETAILS OF SHOULDER & SUBGRADE TREATMENT

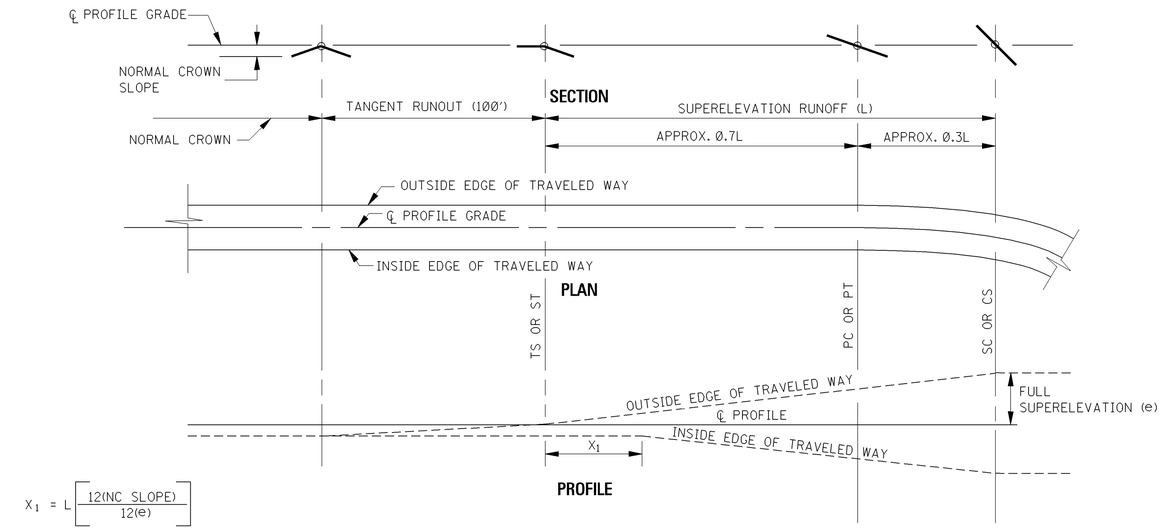

$$X_1 = L\left[\frac{12(\text{NC SLOPE})}{12(e)}\right]$$

DIAGRAMMATIC PLAN AND PROFILE

*D	V = 30 mph			V = 40 mph			V = 50 mph			V = 55 mph			V = 60 mph			V = 65 mph			V = 70 mph		
	e	L(ft)		e	L(ft)		e	L(ft)		e	L(ft)		e	L(ft)		e	L(ft)		e	L(ft)	
		A	B		A	B		A	B		A	B		A	B		A	B		A	B
0°15′	NC	0	0	NC	0	0	NC	0	0	NC	0	0	NC	0	0	NC	0	0	NC	0	0
0°30′	NC	0	0	NC	0	0	NC	0	0	NC	0	0	RC	175	175	RC	190	190	RC	200	200
0°45′	NC	0	0	NC	0	0	RC	150	150	RC	160	160	.023	175	175	.025	190	190	.028	200	200
1°00′	NC	0	0	NC	0	0	.021	150	150	.025	160	160	.030	175	175	.033	190	190	.037	200	200
1°30′	NC	0	0	.021	125	125	.031	150	150	.037	160	160	.043	175	190	.048	190	220	.054	200	260
2°00′	RC	100	100	.028	125	125	.040	150	150	.048	160	180	.055	175	230	.062	190	290	.070	220	330
2°30′	.021	100	100	.034	125	125	.049	150	180	.056	160	210	.067	190	280	.075	220	330	.085	260	390
3°00′	.025	100	100	.040	125	125	.057	150	210	.067	170	250	.077	210	320	.087	250	380	.096	280	420
3°30′	.029	100	100	.046	125	140	.065	160	240	.075	190	290	.086	230	350	.095	270	400	.100	300	450
4°00′	.033	100	100	.051	125	160	.072	180	260	.083	210	320	.093	250	380	.099	280	420	D_{max} = 3°30′		
5°00′	.040	100	110	.061	130	190	.083	200	300	.094	240	360	.098	270	400	D_{max} = 4°15′					
6°00′	.046	100	120	.070	150	220	.092	220	330	.099	250	380	D_{max} = 5°15′								
7°00′	.053	100	140	.078	160	240	.098	240	350	D_{max} = 6°30′											
8°00′	.058	110	160	.084	180	260	.100	240	360												
9°00′	.063	120	170	.089	190	280	D_{max} = 8°15′														
10°00′	.068	120	180	.094	200	290															
11°00′	.072	130	200	.097	200	310															
12°00′	.076	140	210	.099	210	310															
13°00′	.080	140	220	.100	210	320															
14°00′	.083	150	220	D_{max} = 13°15′																	
16°00′	.089	160	240																		
18°00′	.093	170	250																		
20°00′	.097	170	260																		
22°00′	.099	180	270																		
24°00′	.100	180	270																		
	D_{max} = 24°45′																				

e_{max} = 10%

KEY:
- D = DEGREE OF CURVE
- V = DESIGN SPEED (mph)
- e = FULL SUPERELEVATION RATE (%)
- L = MINIMUM LENGTH OF SUPERELEVATION RUNOFF (FROM ADVERSE CROWN REMOVED TO FULL SUPER) (ft)
- A = "L" FOR 1-LANE WIDTH OF ROTATION
- B = "L" FOR 2-LANE WIDTH OF ROTATION
- NC = NORMAL CROWN (2% CROSS SLOPE)
- RC = REVERSE CROWN; SUPERELEVATE AT NORMAL CROWN SLOPE (2%)

*NOTE: FOR DEGREES OF CURVE INTERMEDIATE BETWEEN TABLE VALUES, USE A STRAIGHT-LINE INTERPOLATION TO DETERMINE THE SUPERELEVATION RATE.

GENERAL NOTES:
1. STATE AID DIVISION: USE STANDARD SA-SE-1.
2. "L" IN THE TABLE IS FOR ROTATION ABOUT THE CENTERLINE OF 2 LANES ("A") AND 4 LANES ("B") OF TRAVELED WAYS (1 LANE AND 2 LANES EACH SIDE OF THE ROTATION POINT RESPECTIVELY). MINIMUM LENGTH OF RUNOFF FOR VARIOUS WIDTHS OF ROTATION ARE AS FOLLOWS:
   FOR ROTATING A WIDTH OF 3 TRAVEL LANES: L = (1.33)(L IN COLUMN B)
   FOR ROTATING A WIDTH OF 4 TRAVEL LANES: L = (1.67)(L IN COLUMN B)
3. SPIRAL TRANSITION CURVES SHOULD BE USED FOR THE LENGTH OF SUPERELEVATION RUNOFF FOR ALL CURVES IN THE TABLE BELOW THE HEAVY LINE (e > 5%).
4. A VERTICAL CURVE WITH A LENGTH (IN FEET) EQUAL TO THE DESIGN SPEED (IN mph) SHOULD BE PLACED AT EXCESSIVE ANGULAR BREAKS.

DATE	REVISION	BY
3-01-02	REVISED SHOULDER SLOPE	S.W.R.

MISSISSIPPI DEPARTMENT OF TRANSPORTATION
ROADWAY DESIGN DIVISION
STANDARD PLAN

SUPERELEVATION TRANSITION CASE I ROTATION ABOUT CENTERLINE
(2% NORMAL SUBGRADE)

ENGLISH

WORKING NUMBER SE-2A

ISSUE DATE: OCTOBER 1, 1998

SHEET NUMBER 276

STATE	PROJECT NO.
MISS.	

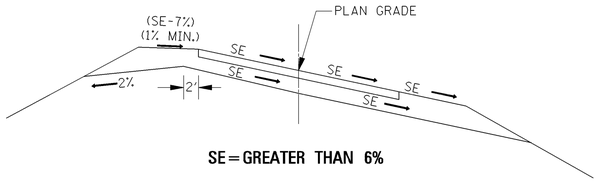

SE = GREATER THAN 6%

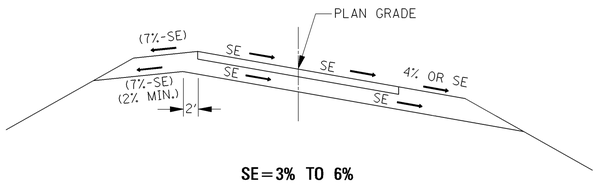

SE = 3% TO 6%

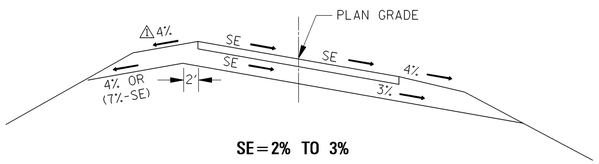

SE = 2% TO 3%

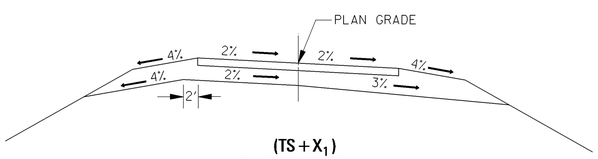

$(TS + X_1)$
POINT OF REVERSE CROWN

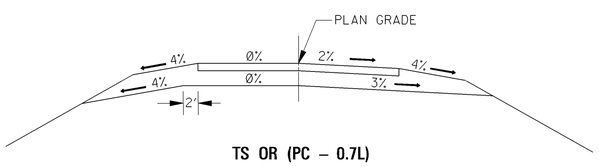

TS OR (PC – 0.7L)

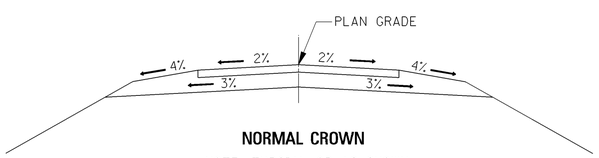

NORMAL CROWN

NOTE: TYPCIAL, OR AS SHOWN ELSEWHERE ON PLANS.

DETAILS OF SHOULDER & SUBGRADE TREATMENT

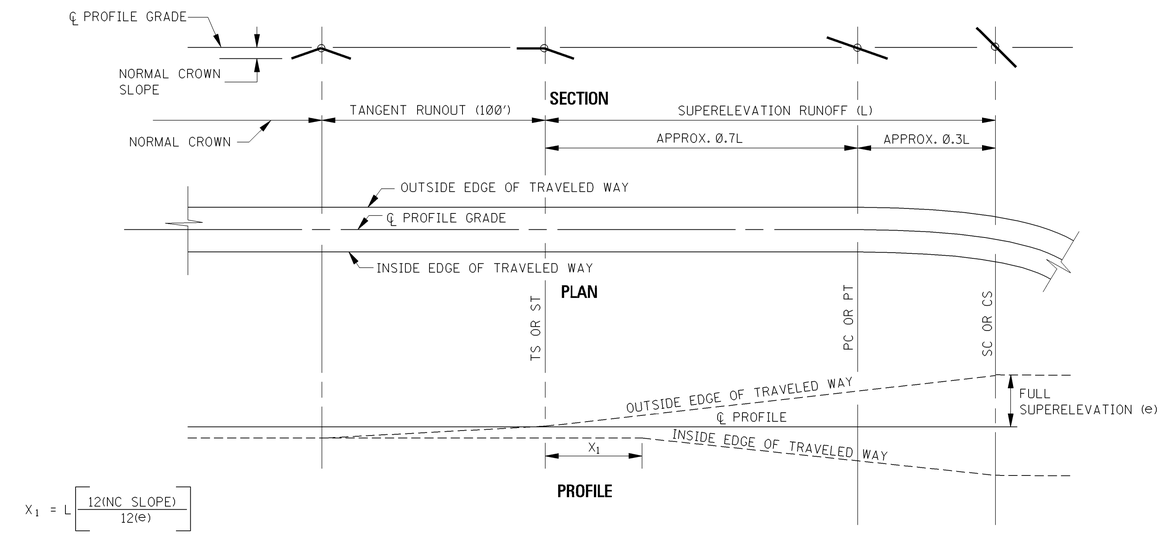

$$X_1 = L\left[\frac{12(\text{NC SLOPE})}{12(e)}\right]$$

DIAGRAMMATIC PLAN AND PROFILE

*D	V = 30 mph			V = 40 mph			V = 50 mph			V = 55 mph			V = 60 mph			V = 65 mph			V = 70 mph		
	e	L(ft)		e	L(ft)		e	L(ft)		e	L(ft)		e	L(ft)		e	L(ft)		e	L(ft)	
		A	B		A	B		A	B		A	B		A	B		A	B		A	B
0°15′	NC	0	0	NC	0	0	NC	0	0	NC	0	0	NC	0	0	NC	0	0	NC	0	0
0°30′	NC	0	0	NC	0	0	NC	0	0	NC	0	0	RC	175	175	RC	190	190	RC	200	200
0°45′	NC	0	0	NC	0	0	RC	150	150	RC	160	160	.023	175	175	.025	190	190	.028	200	200
1°00′	NC	0	0	NC	0	0	.021	150	150	.025	160	160	.030	175	175	.033	190	190	.037	200	200
1°30′	NC	0	0	.021	125	125	.031	150	150	.037	160	160	.043	175	190	.048	190	220	.054	200	260
2°00′	RC	100	100	.028	125	125	.040	150	150	.048	160	180	.055	175	230	.062	190	290	.070	220	330
2°30′	.021	100	100	.034	125	125	.049	150	180	.056	160	210	.067	190	280	.075	220	330	.085	260	390
3°00′	.025	100	100	.040	125	125	.057	150	210	.067	170	250	.077	210	320	.087	250	380	.096	280	420
3°30′	.029	100	100	.046	125	140	.065	160	240	.075	190	290	.086	230	350	.095	270	400	.100	300	450
4°00′	.033	100	100	.051	125	160	.072	180	260	.083	210	320	.093	250	380	.099	280	420	D_{max} = 3°30′		
5°00′	.040	100	110	.061	130	190	.083	200	300	.094	240	360	.098	270	400	D_{max} = 4°15′					
6°00′	.046	100	120	.070	150	220	.092	220	330	.099	250	380	D_{max} = 5°15′								
7°00′	.053	100	140	.078	160	240	.098	240	350	D_{max} = 6°30′											
8°00′	.058	110	160	.084	180	260	.100	240	360												
9°00′	.063	120	170	.089	190	280	D_{max} = 8°15′														
10°00′	.068	120	180	.094	200	290															
11°00′	.072	130	200	.097	200	310															
12°00′	.076	140	210	.099	210	310															
13°00′	.080	140	220	.100	210	320															
14°00′	.083	150	220	D_{max} = 13°15′																	
16°00′	.089	160	240																		
18°00′	.093	170	250																		
20°00′	.097	170	260																		
22°00′	.099	180	270																		
24°00′	.100	180	270																		
	D_{max} = 24°45′																				

e_{max} = 10%

KEY:
- D = DEGREE OF CURVE
- V = DESIGN SPEED (mph)
- e = FULL SUPERELEVATION RATE (%)
- L = MINIMUM LENGTH OF SUPERELEVATION RUNOFF (FROM ADVERSE CROWN REMOVED TO FULL SUPER) (ft)
- A = "L" FOR 1-LANE WIDTH OF ROTATION
- B = "L" FOR 2-LANE WIDTH OF ROTATION
- NC = NORMAL CROWN (2% CROSS SLOPE)
- RC = REVERSE CROWN; SUPERELEVATE AT NORMAL CROWN SLOPE (2%)

*NOTE: FOR DEGREES OF CURVE INTERMEDIATE BETWEEN TABLE VALUES, USE A STRAIGHT-LINE INTERPOLATION TO DETERMINE THE SUPERELEVATION RATE.

GENERAL NOTES:
1. STATE AID DIVISION: USE STANDARD SA-SE-1.
2. "L" IN THE TABLE IS FOR ROTATION ABOUT THE CENTERLINE OF 2 LANES ("A") AND 4 LANES ("B") OF TRAVELED WAYS (1 LANE AND 2 LANES EACH SIDE OF THE ROTATION POINT RESPECTIVELY). MINIMUM LENGTH OF RUNOFF FOR VARIOUS WIDTHS OF ROTATION ARE AS FOLLOWS:
   FOR ROTATING A WIDTH OF 3 TRAVEL LANES: L = (1.33)(L IN COLUMN B)
   FOR ROTATING A WIDTH OF 4 TRAVEL LANES: L = (1.67)(L IN COLUMN B)
3. SPIRAL TRANSITION CURVES SHOULD BE USED FOR THE LENGTH OF SUPERELEVATION RUNOFF FOR ALL CURVES IN THE TABLE BELOW THE HEAVY LINE (e > 5%).
4. A VERTICAL CURVE WITH A LENGTH (IN FEET) EQUAL TO THE DESIGN SPEED (IN mph) SHOULD BE PLACED AT EXCESSIVE ANGULAR BREAKS.

DATE	REVISION	BY
3-01-02	REVISED SHOULDER SLOPE	S.W.R.

MISSISSIPPI DEPARTMENT OF TRANSPORTATION
ROADWAY DESIGN DIVISION
STANDARD PLAN

SUPERELEVATION TRANSITION CASE I ROTATION ABOUT CENTERLINE (3% NORMAL SUBGRADE)

ENGLISH

WORKING NUMBER SE-2B

ISSUE DATE: OCTOBER 1, 1998

SHEET NUMBER 277

STATE	PROJECT NO.
MISS.	

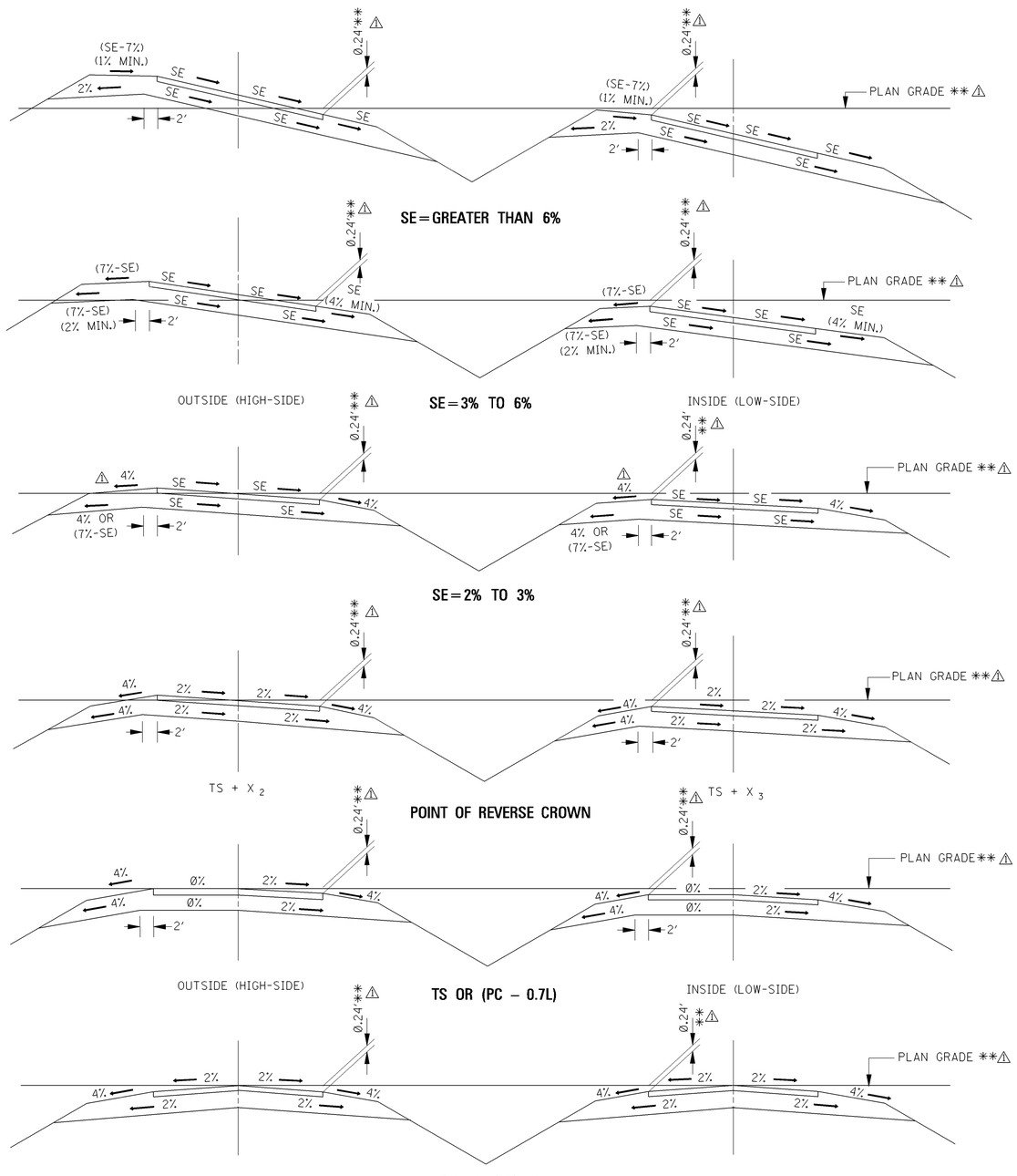

NORMAL CROWN

NOTE: TYPICAL, OR AS SHOWN ELSEWHERE ON THE PLANS.

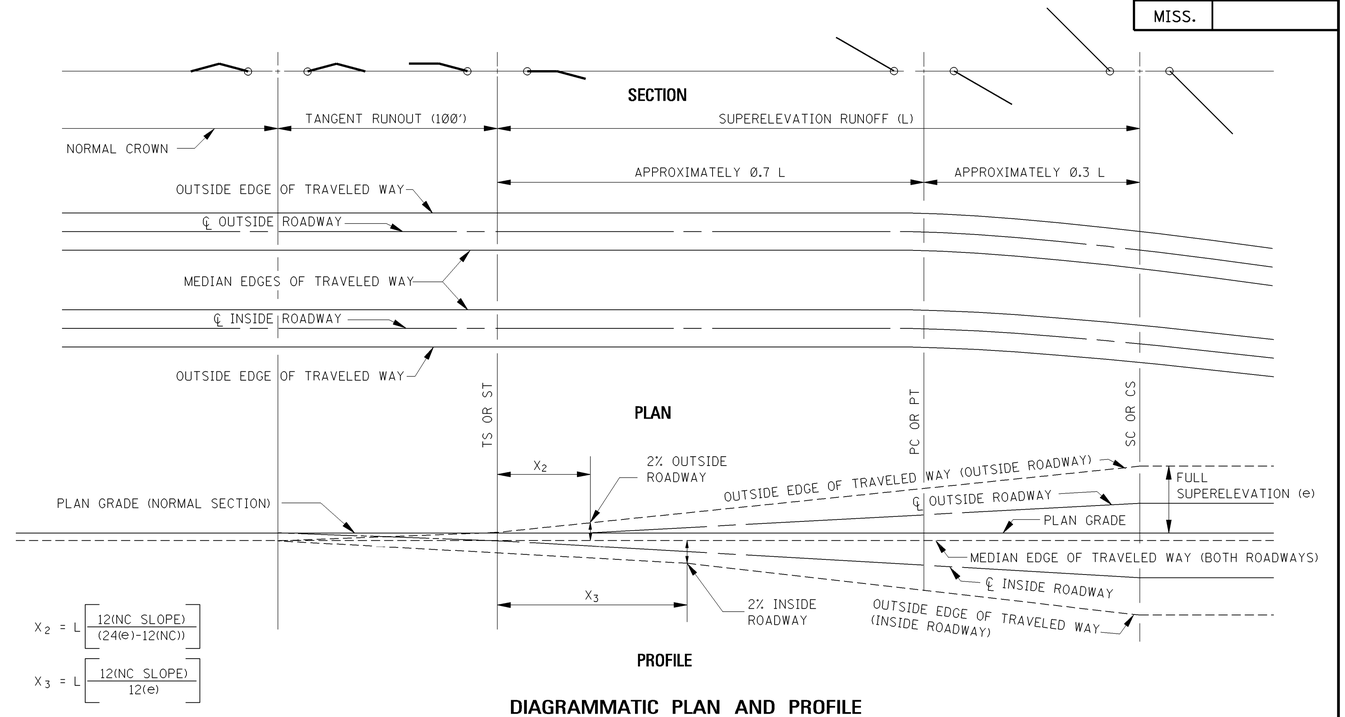

$$X_2 = L\left[\frac{12(NC\ SLOPE)}{(24(e)-12(NC))}\right]$$

$$X_3 = L\left[\frac{12(NC\ SLOPE)}{12(e)}\right]$$

DIAGRAMMATIC PLAN AND PROFILE

*D	V = 30 mph			V = 40 mph			V = 50 mph			V = 55 mph			V = 60 mph			V = 65 mph			V = 70 mph		
	e	L(ft)		e	L(ft)		e	L(ft)		e	L(ft)		e	L(ft)		e	L(ft)		e	L(ft)	
		A	B		A	B		A	B		A	B		A	B		A	B		A	B
0°15′	NC	0	0	NC	0	0	NC	0	0	NC	0	0	NC	0	0	NC	0	0	NC	0	0
0°30′	NC	0	0	NC	0	0	NC	0	0	NC	0	0	RC	175	175	RC	190	190	RC	200	200
0°45′	NC	0	0	NC	0	0	RC	150	150	RC	160	160	.023	175	175	.025	190	190	.028	200	200
1°00′	NC	0	0	NC	0	0	.021	150	150	.025	160	160	.030	175	175	.033	190	190	.037	200	200
1°30′	NC	0	0	.021	125	125	.031	150	150	.037	160	160	.043	175	190	.048	190	220	.054	200	260
2°00′	RC	100	100	.028	125	125	.040	150	150	.048	160	180	.055	175	230	.062	190	290	.070	220	330
2°30′	.021	100	100	.034	125	125	.049	150	180	.056	160	210	.067	190	280	.075	220	330	.085	260	390
3°00′	.025	100	100	.040	125	125	.057	150	210	.067	170	250	.077	210	320	.087	250	380	.096	280	420
3°30′	.029	100	100	.046	125	140	.065	160	240	.075	190	290	.086	230	350	.095	270	400	.100	300	450
4°00′	.033	100	100	.051	125	160	.072	180	260	.083	210	320	.093	250	380	.099	280	420	D_{max} = 3°30′		
5°00′	.040	100	110	.061	130	190	.083	200	300	.094	240	360	.098	270	400	D_{max} = 4°15′					
6°00′	.046	100	120	.070	150	220	.092	220	330	.099	250	380	D_{max} = 5°15′								
7°00′	.053	100	140	.078	160	240	.098	240	350	D_{max} = 6°30′											
8°00′	.058	110	160	.084	180	260	.100	240	360												
9°00′	.063	120	170	.089	190	280	D_{max} = 8°15′														
10°00′	.068	120	180	.094	200	290															
11°00′	.072	130	200	.097	200	310															
12°00′	.076	140	210	.099	210	310															
13°00′	.080	140	220	.100	210	320															
14°00′	.083	150	220	D_{max} = 13°15′																	
16°00′	.089	160	240																		
18°00′	.093	170	250																		
20°00′	.097	170	260																		
22°00′	.099	180	270																		
24°00′	.100	180	270																		
	D_{max} = 24°45′																				

e_{max} = 10%

KEY:

D = DEGREE OF CURVE
V = DESIGN SPEED (mph)
e = FULL SUPERELEVATION RATE (%)
L = MINIMUM LENGTH OF SUPERELEVATION RUNOFF (FROM ADVERSE CROWN REMOVED TO FULL SUPER) (ft)
A = "L" FOR 1-LANE WIDTH OF ROTATION
B = "L" FOR 2-LANE WIDTH OF ROTATION
NC = NORMAL CROWN (2% CROSS SLOPE)
RC = REVERSE CROWN; SUPERELEVATE AT NORMAL CROWN SLOPE (2%)

*NOTE: FOR DEGREES OF CURVE INTERMEDIATE BETWEEN TABLE VALUES, USE A STRAIGHT-LINE INTERPOLATION TO DETERMINE THE SUPERELEVATION RATE.

⚠** THE 0.24 DIFFERENCE IN ELEVATION FROM PLAN GRADE LINE TO EDGE OF TRAVELED WAY IS BASED ON 12′ TRAVEL LANES, 2% NORMAL CROWN SLOPE, AND THE LOCATION OF PLAN GRADE AT THE CENTERLINE OF ROADWAY. ALTHOUGH THE HORIZONTAL LOCATION OF PLAN GRADE AT THE CENTERLINE IS PREFERRED AND ILLUSTRATED ON THIS STANDARD DRAWING, PLAN GRADE LOCATION IS VARIABLE (i.e. PLAN GRADE AT THE MEDIAN EDGE OF TRAVEL LANE) AND SHOULD BE VERIFIED ON THE TYPICAL SECTION(S).

GENERAL NOTES:

1. "L" IN THE TABLE IS FOR ROTATION ABOUT THE CENTERLINE OF 2 LANES ("A") AND 4 LANES ("B") OF TRAVELED WAYS (1 LANE AND 2 LANES EACH SIDE OF THE ROTATION POINT RESPECTIVELY). MINIMUM LENGTH OF RUNOFF FOR VARIOUS WIDTHS OF ROTATION ARE AS FOLLOWS:
   FOR ROTATING A WIDTH OF 3 TRAVEL LANES: L = (1.33)(L IN COLUMN B)
   FOR ROTATING A WIDTH OF 4 TRAVEL LANES: L = (1.67)(L IN COLUMN B)
2. SPIRAL TRANSITION CURVES SHOULD BE USED FOR THE LENGTH OF SUPERELEVATION RUNOFF FOR ALL CURVES IN THE TABLE BELOW THE HEAVY LINE (e > 5%).
3. A VERTICAL CURVE WITH A LENGTH (IN FEET) EQUAL TO THE DESIGN SPEED (IN mph) SHOULD BE PLACED AT EXCESSIVE ANGULAR BREAKS.

REVISION	DATE	BY
ADDED NOTE & REV. SLOPE	3-01-02	S.W.R.

MISSISSIPPI DEPARTMENT OF TRANSPORTATION
ROADWAY DESIGN DIVISION
STANDARD PLAN

SUPERELEVATION TRANSITION CASE II ROTATION ABOUT EDGE OF TRAVELED WAY (2% NORMAL SUBGRADE)

ISSUE DATE: OCTOBER 1, 1998

WORKING NUMBER SE-2C

SHEET NUMBER 278

STATE	PROJECT NO.
MISS.	

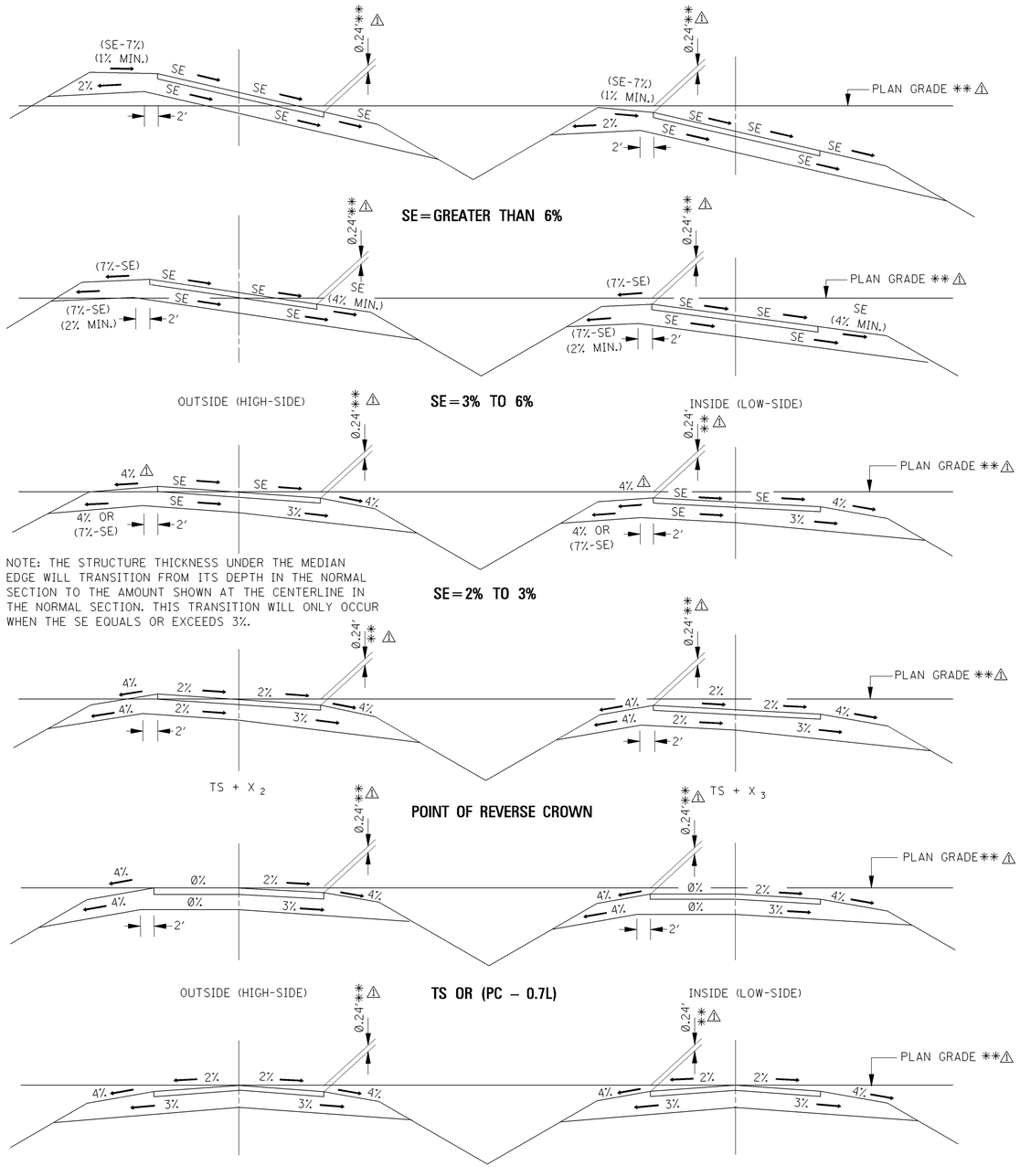

NOTE: THE STRUCTURE THICKNESS UNDER THE MEDIAN EDGE WILL TRANSITION FROM ITS DEPTH IN THE NORMAL SECTION TO THE AMOUNT SHOWN AT THE CENTERLINE IN THE NORMAL SECTION. THIS TRANSITION WILL ONLY OCCUR WHEN THE SE EQUALS OR EXCEEDS 3%.

NOTE: TYPICAL, OR AS SHOWN ELSEWHERE ON THE PLANS.

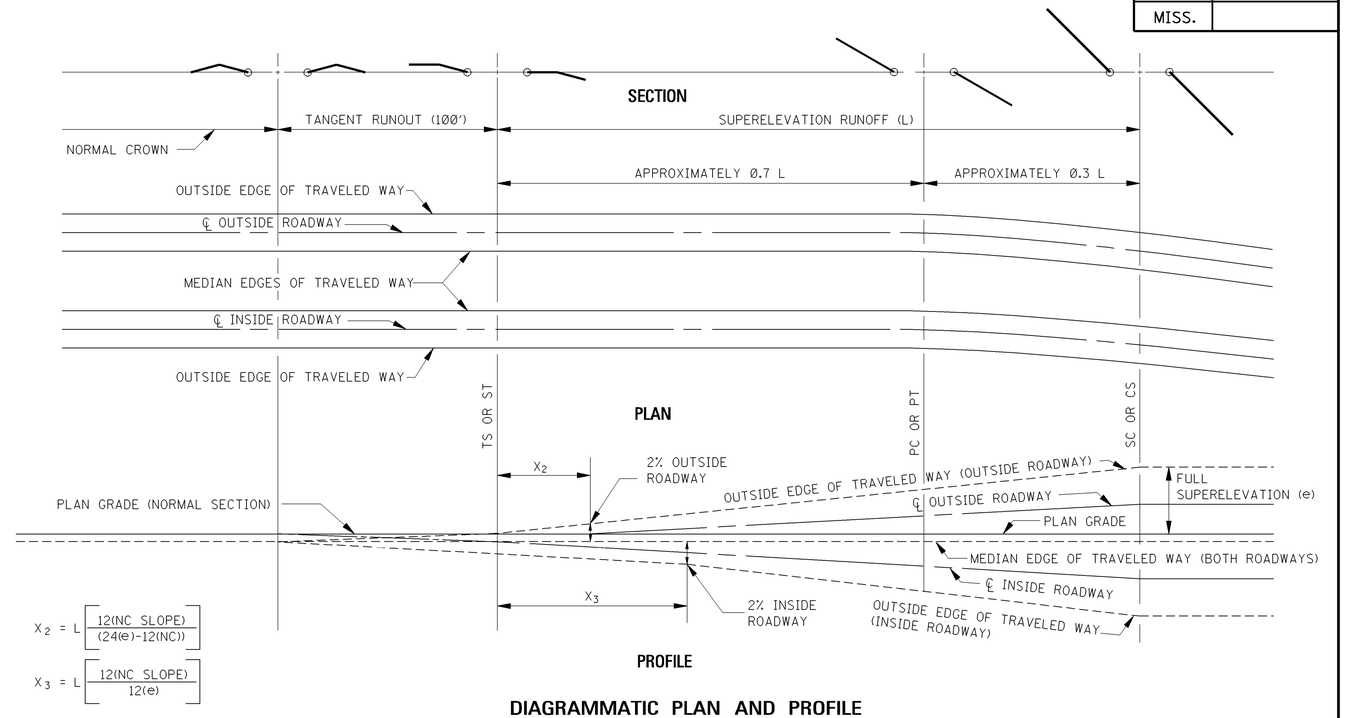

$$X_2 = L\left[\frac{12(NC\ SLOPE)}{(24(e)-12(NC))}\right]$$

$$X_3 = L\left[\frac{12(NC\ SLOPE)}{12(e)}\right]$$

DIAGRAMMATIC PLAN AND PROFILE

*D	V = 30 mph			V = 40 mph			V = 50 mph			V = 55 mph			V = 60 mph			V = 65 mph			V = 70 mph		
	e	L(ft)		e	L(ft)		e	L(ft)		e	L(ft)		e	L(ft)		e	L(ft)		e	L(ft)	
		A	B		A	B		A	B		A	B		A	B		A	B		A	B
0°15′	NC	0	0	NC	0	0	NC	0	0	NC	0	0	NC	0	0	NC	0	0	NC	0	0
0°30′	NC	0	0	NC	0	0	NC	0	0	NC	0	0	RC	175	175	RC	190	190	RC	200	200
0°45′	NC	0	0	NC	0	0	RC	150	150	RC	160	160	.023	175	175	.025	190	190	.028	200	200
1°00′	NC	0	0	NC	0	0	.021	150	150	.025	160	160	.030	175	175	.033	190	190	.037	200	200
1°30′	NC	0	0	.021	125	125	.031	150	150	.037	160	160	.043	175	190	.048	190	220	.054	200	260
2°00′	RC	100	100	.028	125	125	.040	150	150	.048	160	180	.055	175	230	.062	190	290	.070	220	330
2°30′	.021	100	100	.034	125	125	.049	150	180	.056	160	210	.067	190	280	.075	220	330	.085	260	390
3°00′	.025	100	100	.040	125	125	.057	150	210	.067	170	250	.077	210	320	.087	250	380	.096	280	420
3°30′	.029	100	100	.046	125	140	.065	160	240	.075	190	290	.086	230	350	.095	270	400	.100	300	450
4°00′	.033	100	100	.051	125	160	.072	180	260	.083	210	320	.093	250	380	.099	280	420	D_{max} = 3°30′		
5°00′	.040	100	110	.061	130	190	.083	200	300	.094	240	360	.098	270	400	D_{max} = 4°15′					
6°00′	.046	100	120	.070	150	220	.092	220	330	.099	250	380	D_{max} = 5°15′								
7°00′	.053	100	140	.078	160	240	.098	240	350	D_{max} = 6°30′											
8°00′	.058	110	160	.084	180	260	.100	240	360												
9°00′	.063	120	170	.089	190	280	D_{max} = 8°15′														
10°00′	.068	120	180	.094	200	290															
11°00′	.072	130	200	.097	200	310															
12°00′	.076	140	210	.099	210	310															
13°00′	.080	140	220	.100	210	320															
14°00′	.083	150	220	D_{max} = 13°15′																	
16°00′	.089	160	240																		
18°00′	.093	170	250																		
20°00′	.097	170	260																		
22°00′	.099	180	270																		
24°00′	.100	180	270																		
	D_{max} = 24°45′																				

e_{max} = 10%

*NOTE: FOR DEGREES OF CURVE INTERMEDIATE BETWEEN TABLE VALUES, USE A STRAIGHT-LINE INTERPOLATION TO DETERMINE THE SUPERELEVATION RATE.

⚠** THE 0.24 DIFFERENCE IN ELEVATION FROM PLAN GRADE LINE TO EDGE OF TRAVELED WAY IS BASED ON 12′ TRAVEL LANES, 2% NORMAL CROWN SLOPE, AND THE LOCATION OF PLAN GRADE AT THE CENTERLINE OF ROADWAY. ALTHOUGH THE HORIZONTAL LOCATION OF PLAN GRADE AT THE CENTERLINE IS PREFERRED AND ILLUSTRATED ON THIS STANDARD DRAWING, PLAN GRADE LOCATION IS VARIABLE (i.e. PLAN GRADE AT THE MEDIAN EDGE OF TRAVEL LANE) AND SHOULD BE VERIFIED ON THE TYPICAL SECTION(S).

KEY:

D = DEGREE OF CURVE
V = DESIGN SPEED (mph)
e = FULL SUPERELEVATION RATE (%)
L = MINIMUM LENGTH OF SUPERELEVATION RUNOFF (FROM ADVERSE CROWN REMOVED TO FULL SUPER) (ft)
A = "L" FOR 1-LANE WIDTH OF ROTATION
B = "L" FOR 2-LANE WIDTH OF ROTATION
NC = NORMAL CROWN (2% CROSS SLOPE)
RC = REVERSE CROWN; SUPERELEVATE AT NORMAL CROWN SLOPE (2%)

GENERAL NOTES:

1. "L" IN THE TABLE IS FOR ROTATION ABOUT THE CENTERLINE OF 2 LANES ("A") AND 4 LANES ("B") OF TRAVELED WAYS (1 LANE AND 2 LANES EACH SIDE OF THE ROTATION POINT RESPECTIVELY). MINIMUM LENGTH OF RUNOFF FOR VARIOUS WIDTHS OF ROTATION ARE AS FOLLOWS:
   FOR ROTATING A WIDTH OF 3 TRAVEL LANES: L = (1.33)(L IN COLUMN B)
   FOR ROTATING A WIDTH OF 4 TRAVEL LANES: L = (1.67)(L IN COLUMN B)
2. SPIRAL TRANSITION CURVES SHOULD BE USED FOR THE LENGTH OF SUPERELEVATION RUNOFF FOR ALL CURVES IN THE TABLE BELOW THE HEAVY LINE (e > 5%).
3. A VERTICAL CURVE WITH A LENGTH (IN FEET) EQUAL TO THE DESIGN SPEED (IN mph) SHOULD BE PLACED AT EXCESSIVE ANGULAR BREAKS.

REVISION	BY	DATE
ADDED NOTE & REV. SLOPE	S.W.R.	3-01-02

MISSISSIPPI DEPARTMENT OF TRANSPORTATION
ROADWAY DESIGN DIVISION
STANDARD PLAN

SUPERELEVATION TRANSITION CASE II ROTATION ABOUT EDGE OF TRAVELED WAY (3% NORMAL SUBGRADE)

ISSUE DATE: OCTOBER 1, 1998

WORKING NUMBER SE-2D

SHEET NUMBER 279

STATE	PROJECT NO.
MISS.	

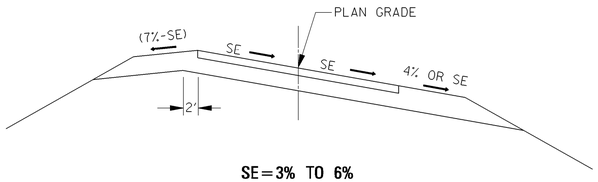

SE=3% TO 6%

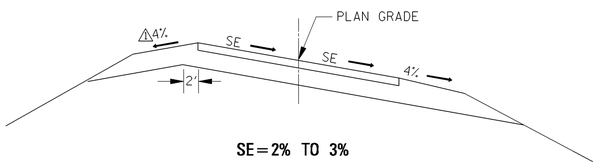

SE=2% TO 3%

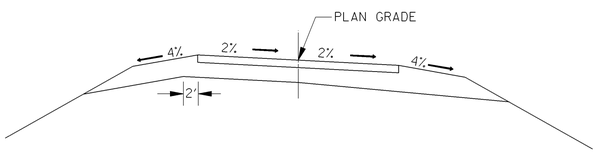

POINT OF REVERSE CROWN

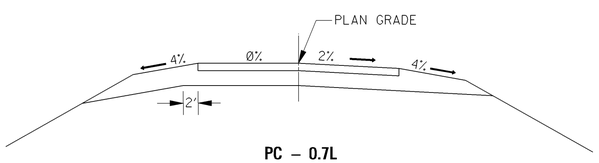

PC – 0.7L

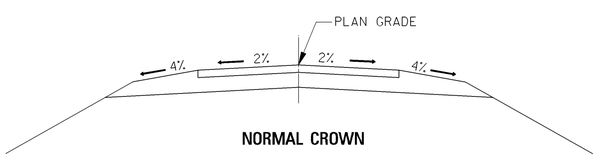

NORMAL CROWN

NOTE: TYPCIAL, OR AS SHOWN ELSEWHERE ON PLANS.

DETAILS OF SHOULDER TREATMENT

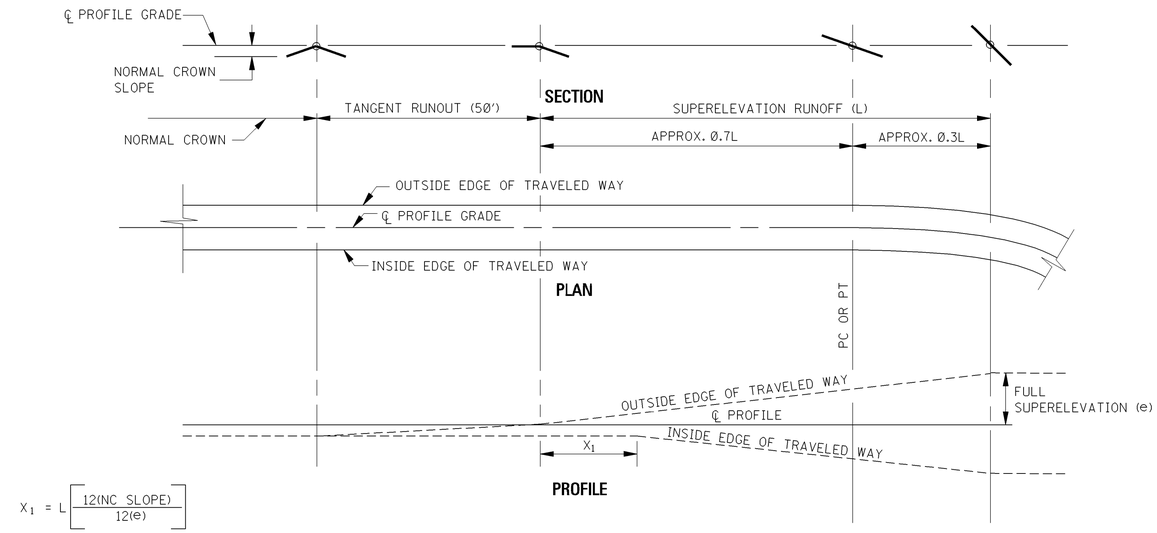

$$X_1 = L\left[\frac{12(\text{NC SLOPE})}{12(e)}\right]$$

DIAGRAMMATIC PLAN AND PROFILE

V = 50 mph			
*D	e	L(ft)	
		A	B
0°30′	NC	0	0
0°45′	RC	150	150
1°00′	.020	150	150
1°30′	.028	150	150
2°00′	.035	150	150
2°30′	.040	150	150
3°00′	.045	150	160
3°30′	.048	150	170
4°00′	.052	150	180
5°00′	.056	150	200
6°00′	.059	150	210
D_{max} = 6°45′			

e_{max} = 6%

*NOTE: FOR DEGREES OF CURVE INTERMEDIATE BETWEEN TABLE VALUES, USE A STRAIGHT-LINE INTERPOLATION TO DETERMINE THE SUPERELEVATION RATE.

KEY:

D = DEGREE OF CURVE
V = DESIGN SPEED (mph)
e = FULL SUPERELEVATION RATE (%)
L = MINIMUM LENGTH OF SUPERELEVATION RUNOFF (FROM ADVERSE CROWN REMOVED TO FULL SUPER) (ft)
A = "L" FOR 1-LANE WIDTH OF ROTATION
B = "L" FOR 2-LANE WIDTH OF ROTATION
NC = NORMAL CROWN (2% CROSS SLOPE)
RC = REVERSE CROWN; SUPERELEVATE AT NORMAL CROWN SLOPE (2%)

GENERAL NOTES:

1. STATE-AID DIVISION: USE STANDARD SA-SE-1.
2. "L" IN THE TABLE IS FOR ROTATION ABOUT THE CENTERLINE OF 2 LANES ("A") AND 4 LANES ("B") OF TRAVELED WAYS (1 LANE AND 2 LANES EACH SIDE OF THE ROTATION POINT RESPECTIVELY). MINIMUM LENGTH OF RUNOFF FOR VARIOUS WIDTHS OF ROTATION ARE AS FOLLOWS:
   FOR ROTATING ABOUT THE CENTER OF A TWO-WAY LEFT-TURN LANE (i.e., A 5-LANE SECTION): L=(1.20)(L IN COLUMN B)
   FOR ROTATING A WIDTH OF 3 TRAVEL LANES: L = (1.33)(L IN COLUMN B)
   FOR ROTATING A WIDTH OF 4 TRAVEL LANES: L = (1.67)(L IN COLUMN B)
3. A VERTICAL CURVE WITH A LENGTH (IN FEET) EQUAL TO THE DESIGN SPEED (IN mph) SHOULD BE PLACED AT EXCESSIVE ANGULAR BREAKS.

DATE	REVISION	BY
3-01-02	REVISED SLOPE	S.W.R.

MISSISSIPPI DEPARTMENT OF TRANSPORTATION
ROADWAY DESIGN DIVISION
STANDARD PLAN

SUPERELEVATION TRANSITION CASE I ROTATION ABOUT CENTERLINE

(URBAN FACILITY, V=50 mph)

ENGLISH

WORKING NUMBER SE-2E

ISSUE DATE: OCTOBER 1, 1998

SHEET NUMBER 280

STATE	PROJECT NO.
MISS.	

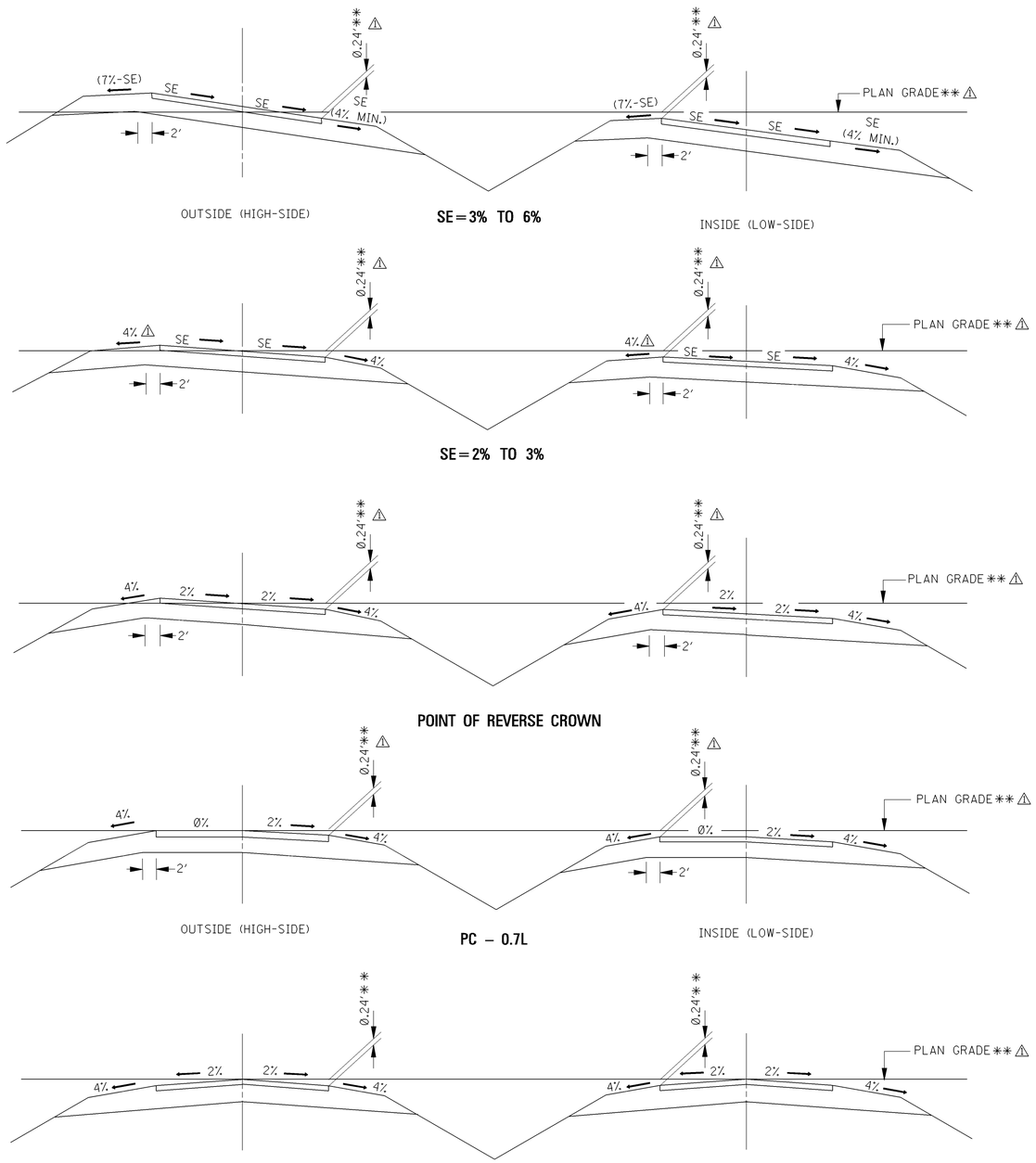

NOTE: TYPICAL, OR AS SHOWN ELSEWHERE ON THE PLANS.

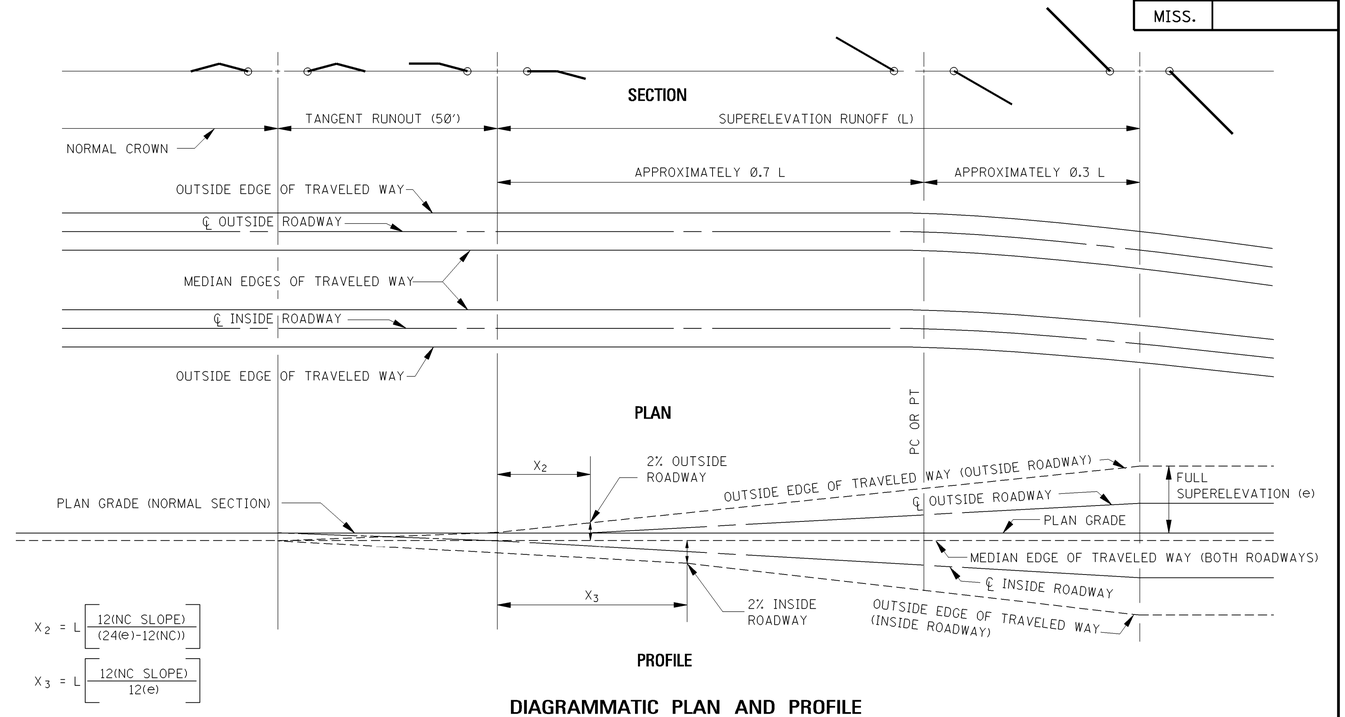

$$X_2 = L\left[\frac{12(NC\ SLOPE)}{(24(e)-12(NC))}\right]$$

$$X_3 = L\left[\frac{12(NC\ SLOPE)}{12(e)}\right]$$

DIAGRAMMATIC PLAN AND PROFILE

V = 50 mph			
*D	e	L(ft)	
		A	B
0°30′	NC	0	0
0°45′	RC	150	150
1°00′	.020	150	150
1°30′	.028	150	150
2°00′	.035	150	150
2°30′	.040	150	150
3°00′	.045	150	160
3°30′	.048	150	170
4°00′	.052	150	180
5°00′	.056	150	200
6°00′	.059	150	210
D_{max} = 6°45′			

e_{max} = 6%

*NOTE: FOR DEGREES OF CURVE INTERMEDIATE BETWEEN TABLE VALUES, USE A STRAIGHT-LINE INTERPOLATION TO DETERMINE THE SUPERELEVATION RATE.

KEY:

D = DEGREE OF CURVE
V = DESIGN SPEED (mph)
e = FULL SUPERELEVATION RATE (%)
L = MINIMUM LENGTH OF SUPERELEVATION RUNOFF (FROM ADVERSE CROWN REMOVED TO FULL SUPER) (ft)
A = "L" FOR 1-LANE WIDTH OF ROTATION
B = "L" FOR 2-LANE WIDTH OF ROTATION
NC = NORMAL CROWN (2% CROSS SLOPE)
RC = REVERSE CROWN; SUPERELEVATE AT NORMAL CROWN SLOPE (2%)

GENERAL NOTES:

1. "L" IN THE TABLE IS FOR ROTATION ABOUT THE CENTERLINE OF 2 LANES ("A") AND 4 LANES ("B") OF TRAVELED WAYS (1 LANE AND 2 LANES EACH SIDE OF THE ROTATION POINT RESPECTIVELY). MINIMUM LENGTH OF RUNOFF FOR VARIOUS WIDTHS OF ROTATION ARE AS FOLLOWS:
   FOR ROTATING A WIDTH OF 3 TRAVEL LANES: L = (1.33)(L IN COLUMN B)
   FOR ROTATING A WIDTH OF 4 TRAVEL LANES: L = (1.67)(L IN COLUMN B)
2. A VERTICAL CURVE WITH A LENGTH (IN FEET) EQUAL TO THE DESIGN SPEED (IN mph) SHOULD BE PLACED AT EXCESSIVE ANGULAR BREAKS.

△** 3. THE 0.24 DIFFERENCE IN ELEVATION FROM PLAN GRADE LINE TO EDGE OF TRAVELED WAY IS BASED ON 12′ TRAVEL LANES, 2% NORMAL CROWN SLOPE, AND THE LOCATION OF PLAN GRADE AT THE CENTERLINE OF ROADWAY. ALTHOUGH THE HORIZONTAL LOCATION OF PLAN GRADE AT THE CENTER-LINE IS PREFERRED AND ILLUSTRATED ON THIS STANDARD DRAWING, PLAN GRADE LOCATION IS VARIABLE (i.e. PLAN GRADE AT THE MEDIAN EDGE OF TRAVEL LANE) AND SHOULD BE VERIFIED ON THE TYPICAL SECTION(S).

DATE	REVISION	BY
3-01-02	REVISED NOTE & SLOPE	S.W.R.

MISSISSIPPI DEPARTMENT OF TRANSPORTATION
ROADWAY DESIGN DIVISION
STANDARD PLAN

SUPERELEVATION TRANSITION CASE II ROTATION ABOUT EDGE OF TRAVELED WAY

(URBAN FACILITY, V=50 mph)

ENGLISH

WORKING NUMBER SE-2F

ISSUE DATE: OCTOBER 1, 1998

SHEET NUMBER 281

STATE	PROJECT NO.
MISS.	

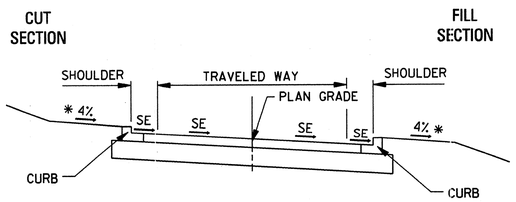

SE=3% TO 6%

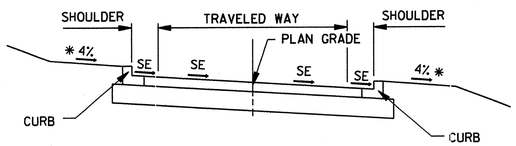

SE=2% TO 3%

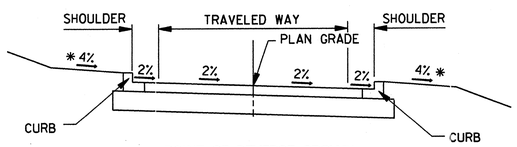

POINT OF REVERSE CROWN

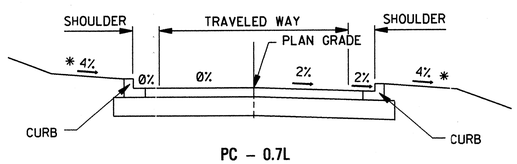

PC – 0.7L

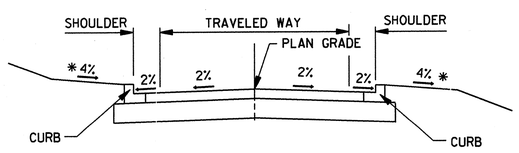

NORMAL CROWN

NOTE: TYPCIAL, OR AS SHOWN ELSEWHERE ON PLANS.

DETAILS OF SHOULDER TREATMENT

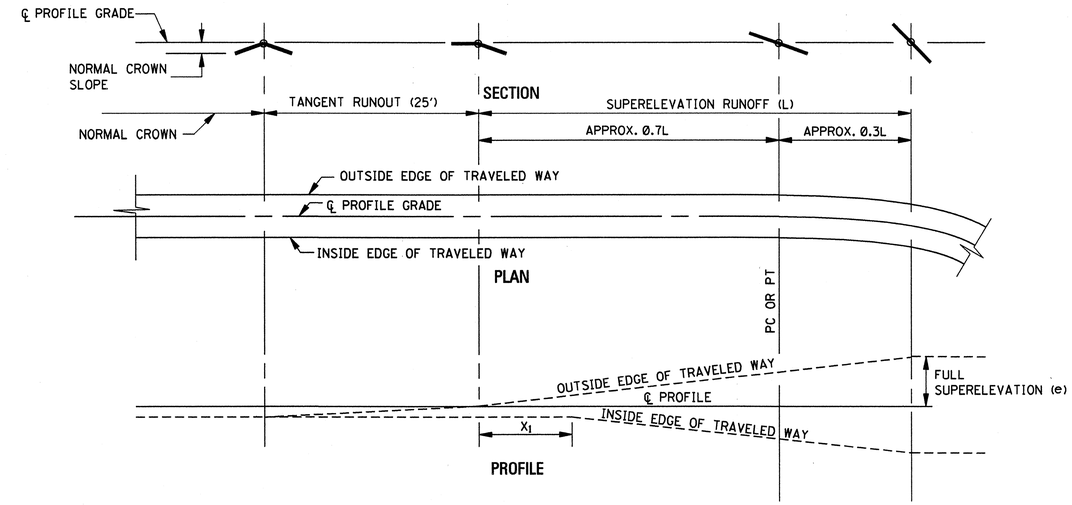

$$X_1 = L\left[\frac{12(NC\ SLOPE)}{12(e)}\right]$$

DIAGRAMMATIC PLAN AND PROFILE

SUPERELEVATION RUNOFF LENGTHS (L)

DESIGN SPEED (mph)	'e'						
	≤ 3.0%	3.5%	4.0%	4.5%	5.0%	5.5%	6.0%
20	40'	45'	50'	60'	65'	70'	75'
25	40'	50'	55'	60'	70'	75'	80'
30	45'	55'	60'	70'	75'	85'	90'
35	55'	60'	65'	75'	80'	90'	95'
40	60'	60'	70'	80'	85'	95'	105'
45	70'	70'	75'	85'	95'	100'	110'

KEY: e_{max} = 6%

R = RADIUS OF CURVE (ft)
V = DESIGN SPEED (mph)
e = FULL SUPERELEVATION RATE (%)
L = MINIMUM LENGTH OF SUPERELEVATION RUNOFF (FROM ADVERSE CROWN REMOVED TO FULL SUPER) (ft)
NC = NORMAL CROWN (2% CROSS SLOPE)
RC = REVERSE CROWN; SUPERELEVATE AT NORMAL CROWN SLOPE (2%)

GENERAL NOTES:

1. SUPERELEVATION RUNOFF LENGTH (L) FROM TABLE IS USED DIRECTLY FOR ROTATION OF 1-LANE WIDTH (i.e., TWO 12' LANES ROTATED ABOUT THE CENTERLINE). FOR GREATER WIDTHS OF ROTATION:
   L (2 LANES) = 1.5(L) (TABLE)
   L (3 LANES) = 2.0(L) (TABLE)
2. A VERTICAL CURVE WITH A LENGTH (IN FEET) EQUAL TO THE DESIGN SPEED (IN mph) SHOULD BE PLACED AT EXCESSIVE ANGULAR BREAKS.

*3. THE MAXIMUM CROSS SLOPE ALLOWED WILL BE 2% WHERE A SIDEWALK IS REQUIRED.

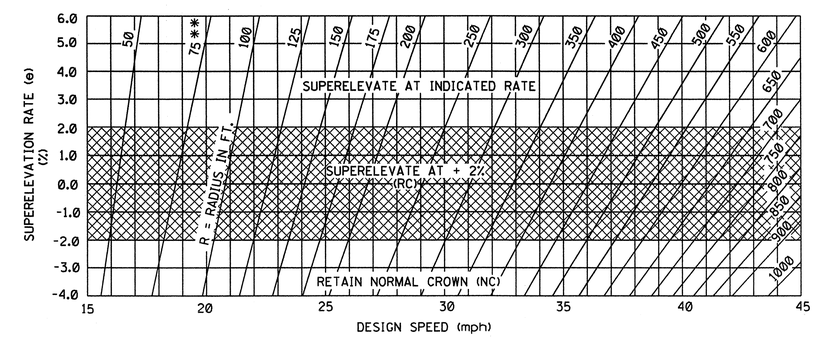

**NOTE: THE VALUES IN THE FIGURE ARE THE CALCULATED (UNROUNDED) VALUES. FOR DESIGN PURPOSES, ROUNDED MINIMUM RADII ARE USED AS FOLLOWS:

	DESIGN SPEED (mph)					
	20	25	30	35	40	45
R_{min} (ft), e=6.0%	75	135	215	320	450	610

REVISION	BY	DATE

MISSISSIPPI DEPARTMENT OF TRANSPORTATION
ROADWAY DESIGN DIVISION
STANDARD PLAN

SUPERELEVATION TRANSITION ROTATION ABOUT CENTERLINE

(URBAN FACILITY, V≤45 mph)

ENGLISH

WORKING NUMBER SE-2G

ISSUE DATE: OCTOBER 1, 1998

SHEET NUMBER 282

STATE	PROJECT NO.
MISS.	

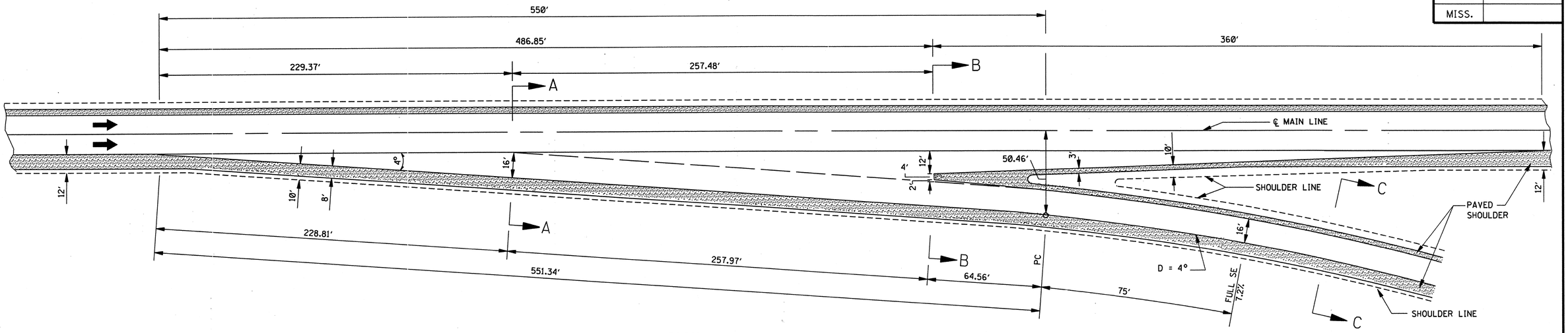

PLAN

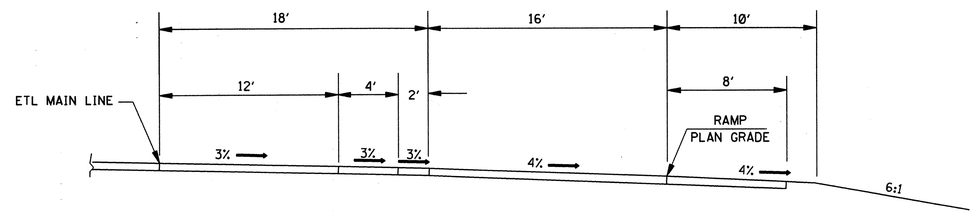

SECTION B–B

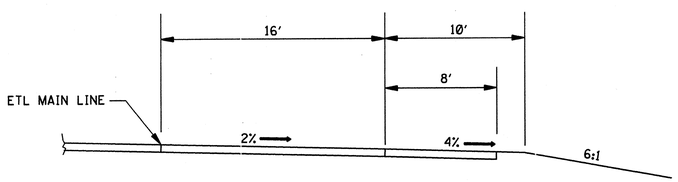

SECTION A–A

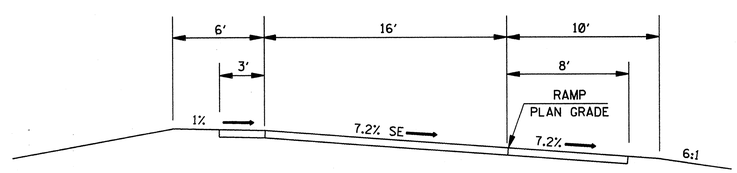

SECTION C–C

GENERAL NOTE:

1. THIS SHEET ASSUMES A RAMP DESIGN SPEED = 50 mph, A MAINLINE DESIGN SPEED = 70 mph AND A RAMP CURVE OF D = 4°. FOR OTHER RAMP CURVES AND/OR MAINLINE DESIGN SPEEDS, MODIFICATIONS SHOULD BE MADE AS NECESSARY TO THE LOCATION OF THE PC, SUPERELEVATION TRANSITIONS, SUPERELEVATION RATE, DECELERATION LENGTHS, ETC.

DATE	REVISION	BY

MISSISSIPPI DEPARTMENT OF TRANSPORTATION
ROADWAY DESIGN DIVISION
STANDARD PLAN

INTERCHANGE DESIGN FOR HIGH SPEED TAPERED EXIT RAMP

ENGLISH

WORKING NUMBER IR-1

ISSUE DATE: OCTOBER 1, 1998

SHEET NUMBER 283

STATE	PROJECT NO.
MISS.	

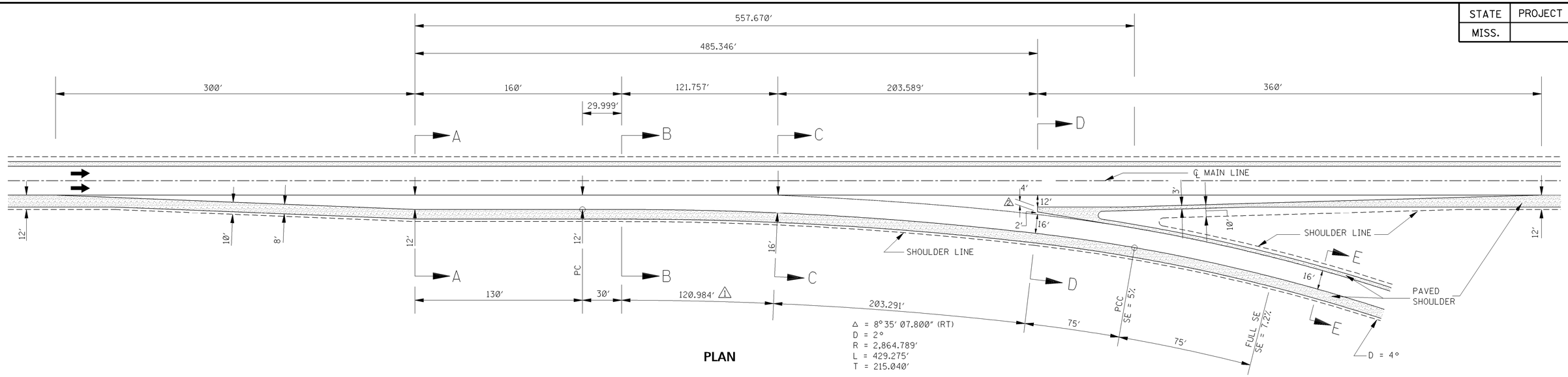

PLAN

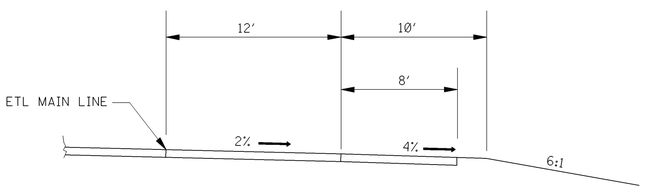

SECTION A–A

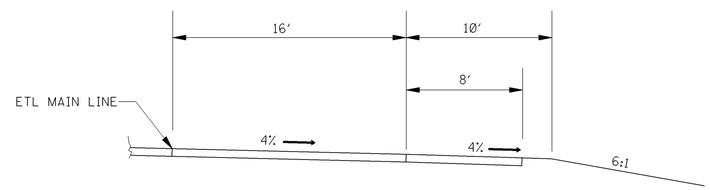

SECTION C–C

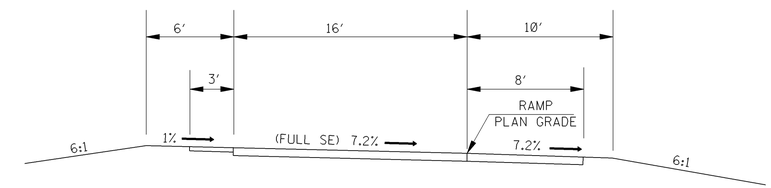

SECTION E–E

GENERAL NOTE:

1. THIS SHEET IS FOR A RAMP CURVE OF D=4°. FOR OTHER RAMP CURVES, MODIFICATIONS SHOULD BE MADE IN THE LOCATION OF THE PC, PAVEMENT SLOPE TRANSITIONS, SUPERELEVATION, ETC.

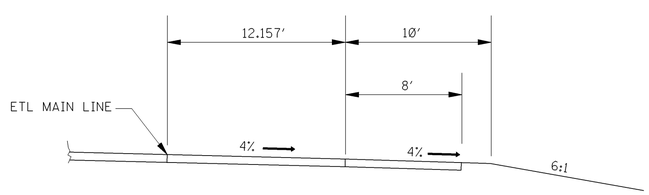

SECTION B–B

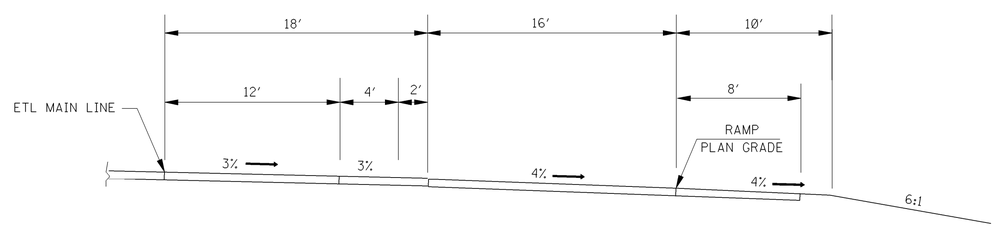

SECTION D–D

3	3-01-02	MOVED DIMENSION	S.W.R.
2	12-1-99	REVISED DIMENSION	S.W.R.
	DATE	REVISION	BY

MISSISSIPPI DEPARTMENT OF TRANSPORTATION
ROADWAY DESIGN DIVISION
STANDARD PLAN

INTERCHANGE DESIGN FOR HIGH-SPEED PARALLEL EXIT RAMP

ENGLISH

WORKING NUMBER
IR-1A

ISSUE DATE: OCTOBER 1, 1998

SHEET NUMBER
284

STATE	PROJECT NO.
MISS.	

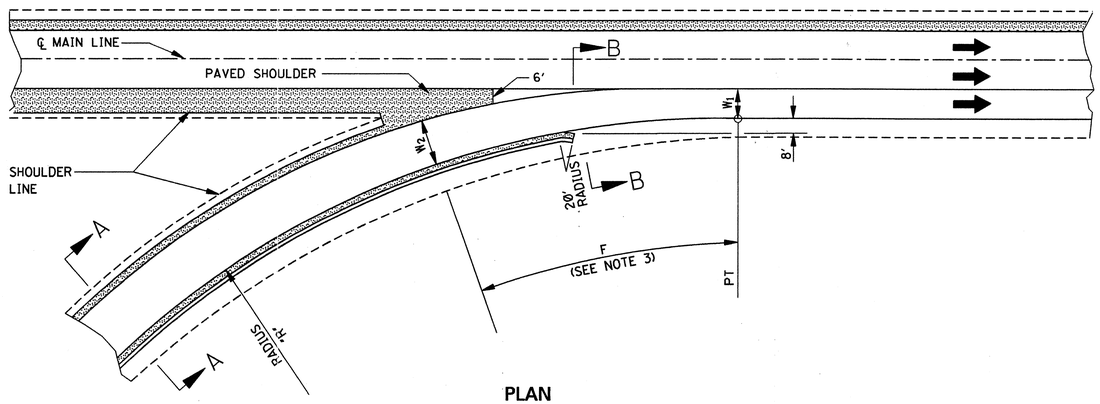

PLAN

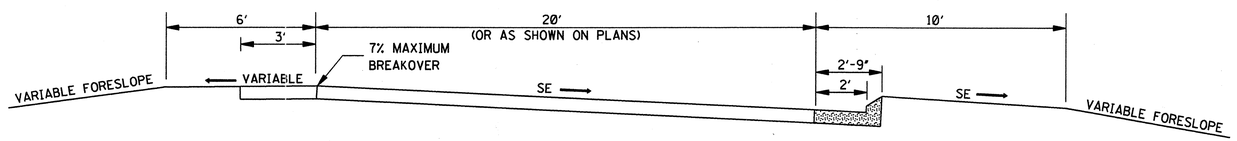

SECTION A–A

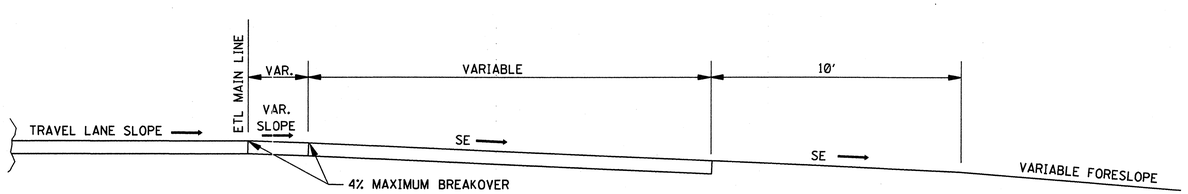

SECTION B–B

GENERAL NOTES:

1. THE RADIUS OF THE LOOP RAMP WILL VARY AS SHOWN ON THE PLANS.
2. W_1 IS NORMALLY 12' AND W_2 IS NORMALLY 20'.
3. THE LENGTH OF THE TRAVELED WAY WIDTH TRANSITION (F) IS DETERMINED BY:

$$F = 0.5\ V'(W_2 - W_1)$$

WHERE: F IS IN FEET AND
W_2 & W_1 = WIDTHS AS SHOWN IN FEET
V' = AVERAGE RUNNING SPEED (MPH)

DATE	REVISION	BY

MISSISSIPPI DEPARTMENT OF TRANSPORTATION
ROADWAY DESIGN DIVISION
STANDARD PLAN

INTERCHANGE DESIGN FOR LOOP ENTRANCE RAMP

ENGLISH

WORKING NUMBER
IR-2

ISSUE DATE: OCTOBER 1, 1998

SHEET NUMBER
285

STATE	PROJECT NO.
MISS.	

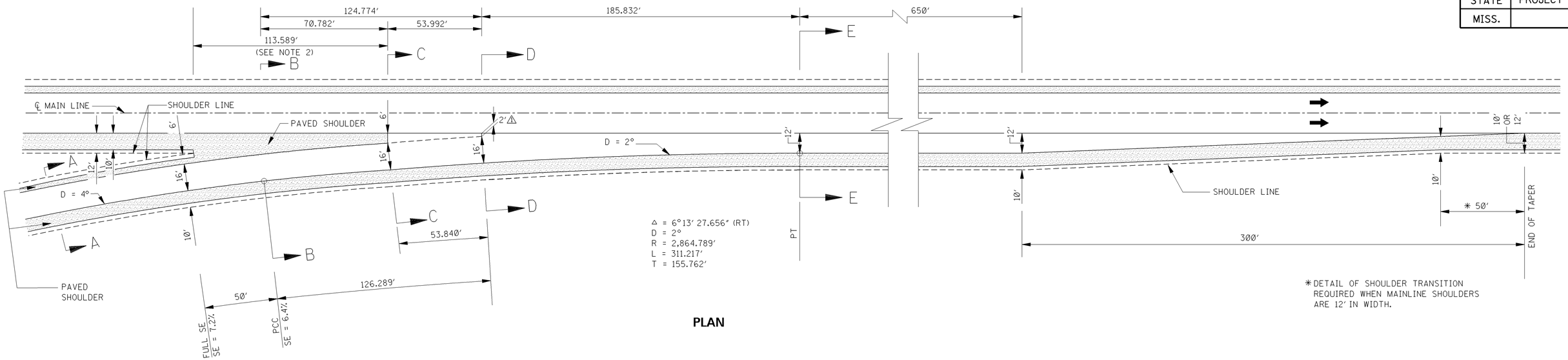

*DETAIL OF SHOULDER TRANSITION REQUIRED WHEN MAINLINE SHOULDERS ARE 12′ IN WIDTH.

PLAN

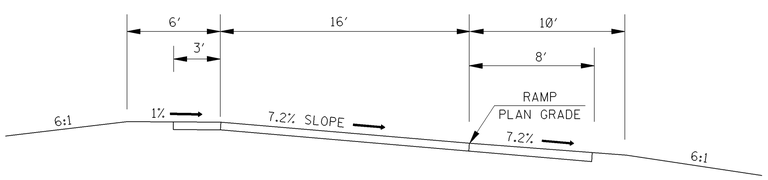

SECTION A–A

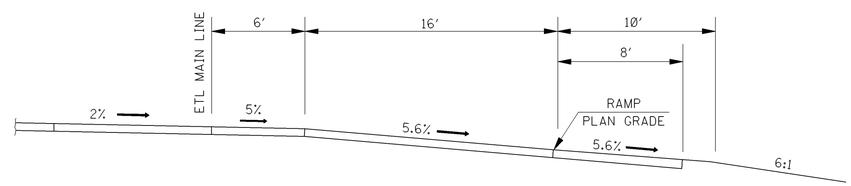

SECTION C–C

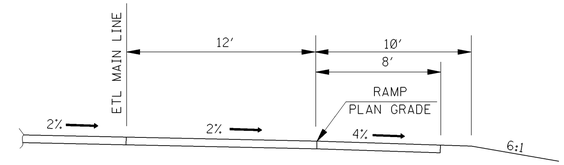

SECTION E–E

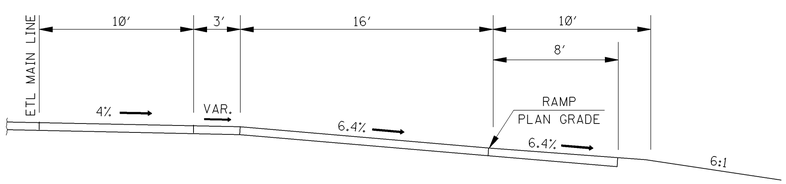

SECTION B–B

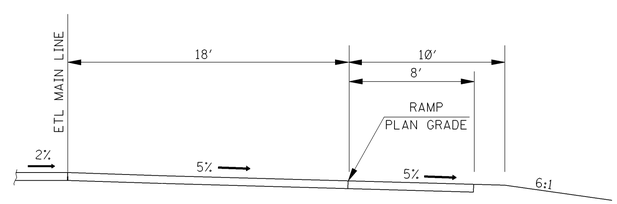

SECTION D–D

GENERAL NOTE:

1. THIS SHEET IS FOR A RAMP CURVE OF D = 4°. FOR OTHER RAMP CURVES, MODIFICATIONS SHOULD BE MADE IN THE LOCATION OF THE PC, PAVEMENT SLOPE TRANSITIONS, SUPERELEVATIONS, ETC.
2. THIS AREA TO BE PAVED WHETHER SHOULDERS ARE PAVED OR NOT.

DATE	DIMENSION REVISION	BY
3-01-02	MOVED	S.W.R.

MISSISSIPPI DEPARTMENT OF TRANSPORTATION
ROADWAY DESIGN DIVISION
STANDARD PLAN

INTERCHANGE DESIGN FOR HIGH-SPEED PARALLEL ENTRANCE RAMP

ENGLISH

WORKING NUMBER IR-2A

ISSUE DATE: OCTOBER 1, 1998

SHEET NUMBER 286

STATE	PROJECT NO.
MISS.	

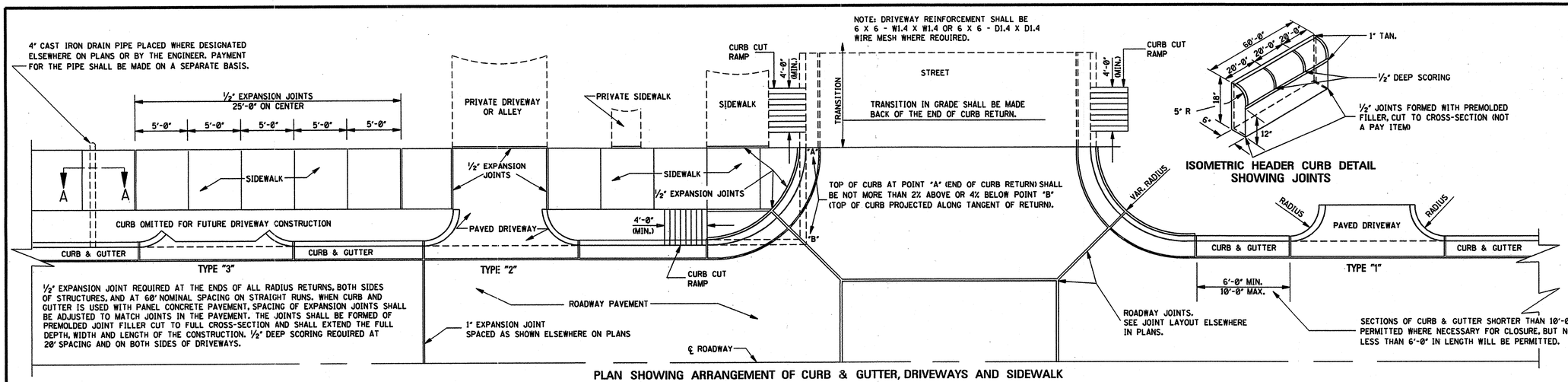

PLAN SHOWING ARRANGEMENT OF CURB & GUTTER, DRIVEWAYS AND SIDEWALK

NOTE: DRIVEWAY REINFORCEMENT SHALL BE 6 X 6 - W1.4 X W1.4 OR 6 X 6 - D1.4 X D1.4 WIRE MESH WHERE REQUIRED.

ISOMETRIC HEADER CURB DETAIL SHOWING JOINTS

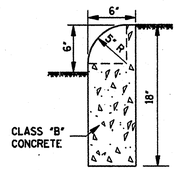

DETAIL OF HEADER CURB

CONTRACTION JOINTS REQUIRED AT 20' O.C.
EXPANSION JOINTS REQUIRED AT 60' O.C.
UNLESS OTHERWISE DIRECTED BY ENGINEER.

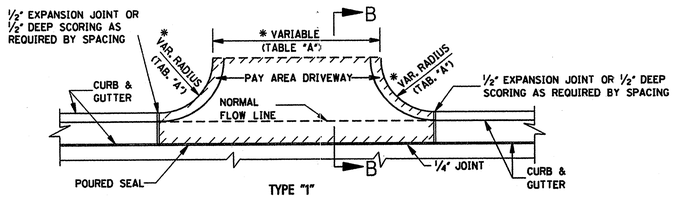

PLAN OF CONCRETE DRIVEWAY

11.058 yd² FOR DRIVEWAY 16'-0" IN WIDTH.
0.574 yd² FOR EACH ADDED OR SUBTRACTED FOOT OF WIDTH.
NOTE: THIS DRIVEWAY AREA EXAMPLE IS COMPUTED ON THE BASIS OF 3'-0" RADIUS. PAYMENT FOR CURB RADIUS SHALL BE INCLUDED IN COMPENSATION FOR DRIVEWAY.

*TABLE "A"		
DRIVEWAY TYPE	DRIVEWAY WIDTH (ft)	CURB RETURN RADIUS (ft)
RESIDENTIAL	16'	3' - 10'
COMMERCIAL/ INDUSTRIAL	30' - 50'	5' - 30'

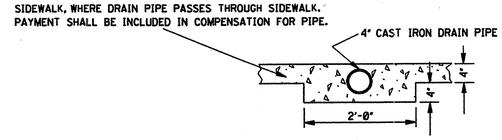

SECTION A–A

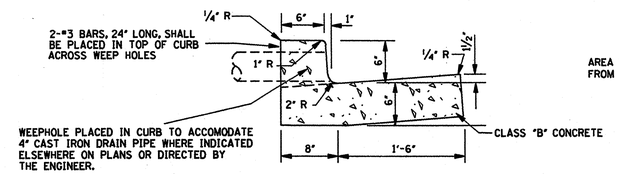

TYPE "1"
DETAIL OF COMBINATION CURB & GUTTER

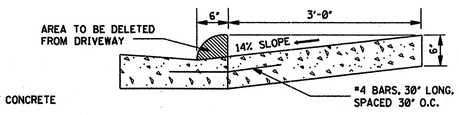

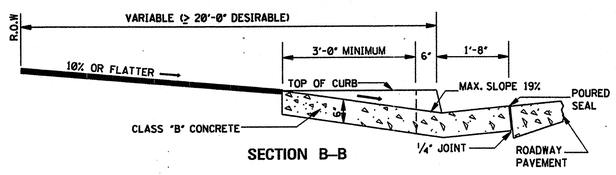

SECTION B–B

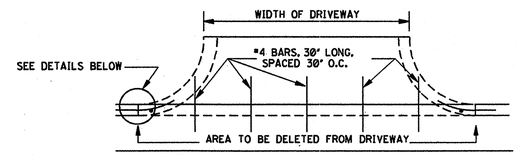

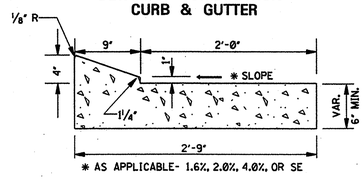

TYPE "1"
DETAIL OF COMBINATION CURB & GUTTER

TYPE "2"
DETAIL OF COMBINATION CURB & GUTTER

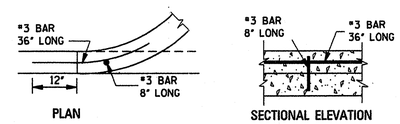

PERMISSIBLE DRIVEWAY CONSTRUCTION METHOD FOR SLIP–FORM PLACEMENT OF CURB & GUTTER

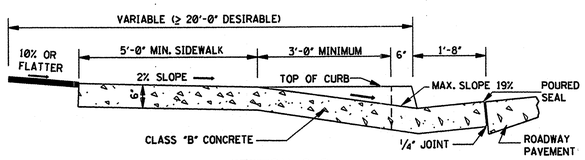

SECTION C–C

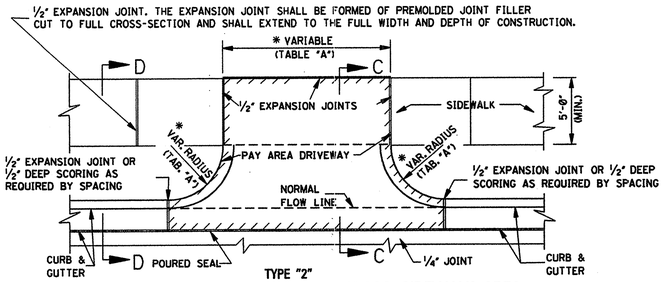

PLAN OF CONCRETE DRIVEWAY ACROSS SIDEWALK AREA

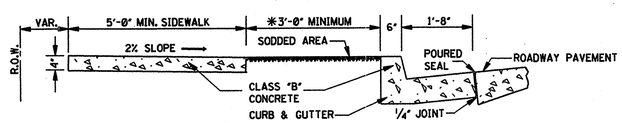

SECTION D–D

*NOTE: THE 3'-0" BUFFER SHOWN IS FOR A BUFFER ZONE. BUFFER ZONE IS NOT REQUIRED UNLESS INDICATED ELSEWHERE ON PLANS.

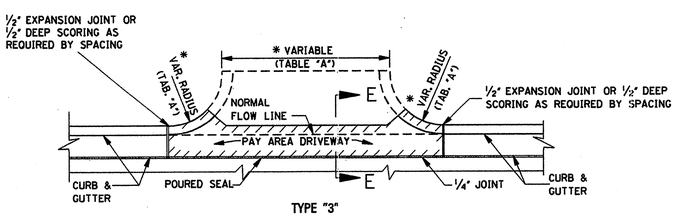

PLAN–CURB OMITTED FOR FUTURE DRIVEWAY CONSTRUCTION

NOTE: THIS TYPE CONSTRUCTION SHALL BE USED WHERE DESIGNATED ELSEWHERE ON PLANS OR BY THE ENGINEER.

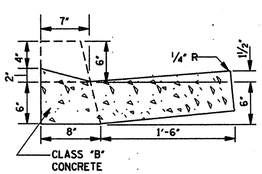

SECTION E–E

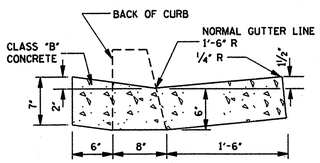

DETAIL OF VALLEY GUTTER

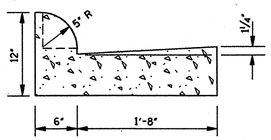

TYPE "3B"
DETAIL OF COMBINATION CURB & GUTTER

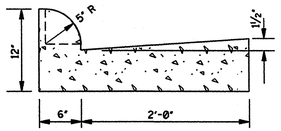

TYPE "3A"
DETAIL OF COMBINATION CURB & GUTTER

GENERAL NOTES:

1. THE STANDARD SPECIFICATIONS ADOPTED BY THE MISSISSIPPI DEPARTMENT OF TRANSPORTATION SHALL, UNLESS OTHERWISE SPECIFIED HEREIN, APPLY TO ALL ITEMS INCLUDED ON THIS DRAWING.
2. TRAVERSE CONTRACTION JOINTS ARE REQUIRED AT 20' ON CENTER FOR ALL CONCRETE DRIVEWAYS THAT EXTEND PAST THE END OF THE CURB RETURN. A ½" WIDE EXPANSION JOINT IS REQUIRED AT THE END OF THE CURB RETURN AND AT 60' ON CENTER THROUGHOUT THE LENGTH OF THE DRIVEWAY. A LONGITUDINAL CONTRACTION JOINT IS REQUIRED FOR ALL DRIVEWAYS EXCEEDING 20' IN WIDTH.
3. SEE SHEET CCR-1 FOR DETAILS OF CURB-CUT RAMPS.

DATE	REVISION	BY

MISSISSIPPI DEPARTMENT OF TRANSPORTATION
ROADWAY DESIGN DIVISION
STANDARD PLAN

DRIVEWAYS, CURB & GUTTER & SIDEWALK

ENGLISH

WORKING NUMBER SD-1

ISSUE DATE: OCTOBER 1, 1998

SHEET NUMBER 287

STATE	PROJECT NO.
MISS.	

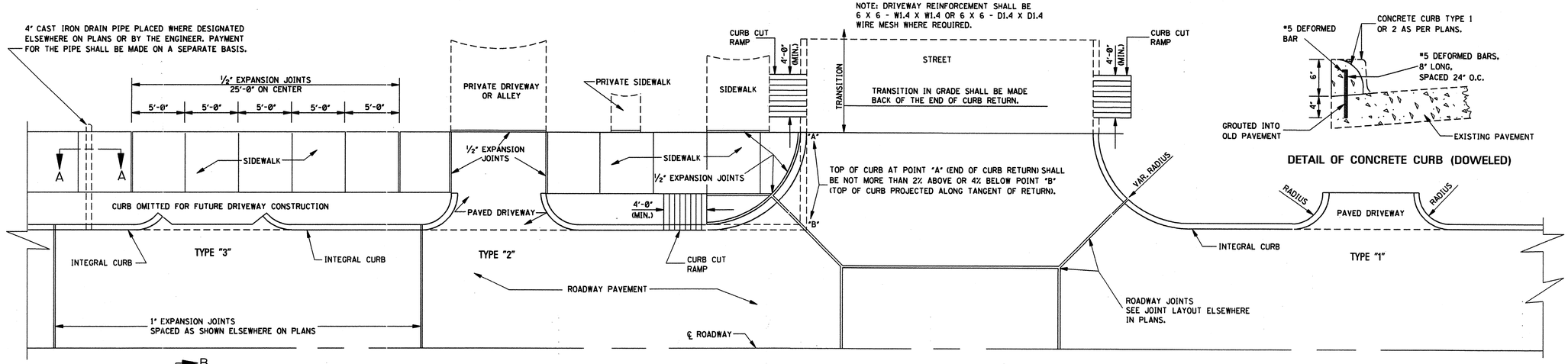

PLAN SHOWING ARRANGEMENT OF INTEGRAL CURB, DRIVEWAYS AND SIDEWALK

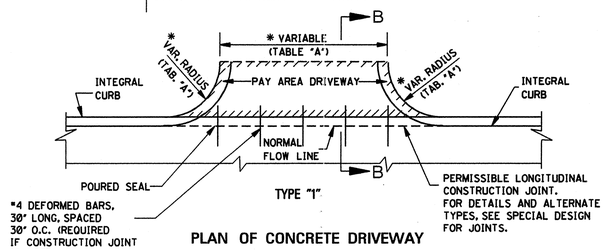

PLAN OF CONCRETE DRIVEWAY

5.761 yd^2 FOR DRIVEWAY 16'-0" IN WIDTH.
0.333 yd^2 FOR EACH ADDED OR SUBTRACTED FOOT OF WIDTH.
NOTE: THIS DRIVEWAY AREA EXAMPLE IS COMPUTED ON THE BASIS OF 3'-0" RADIUS. PAYMENT FOR CURB RADIUS SHALL BE INCLUDED IN COMPENSATION FOR DRIVEWAY.

*TABLE "A"		
DRIVEWAY TYPE	DRIVEWAY WIDTH (ft)	CURB RETURN RADIUS (ft)
RESIDENTIAL	16'	3' - 10'
COMMERCIAL/ INDUSTRIAL	30' - 50'	5' - 30'

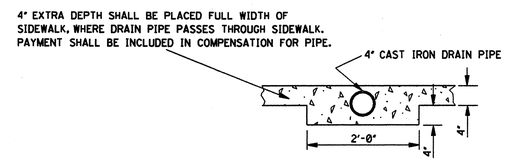

SECTION A–A

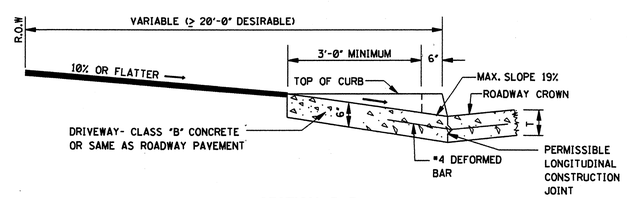

SECTION B–B

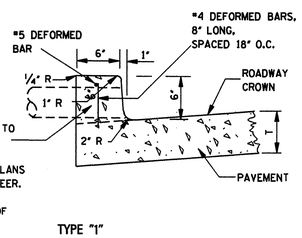

TYPE "1"
DETAIL OF INTEGRAL CURB

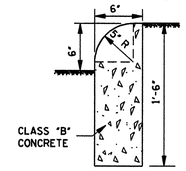

DETAIL OF HEADER CURB

CONTRACTION JOINTS REQUIRED AT 20' O.C.
EXPANSION JOINTS REQUIRED AT 60' O.C.
UNLESS OTHERWISE DIRECTED BY ENGINEER.

SECTION C–C

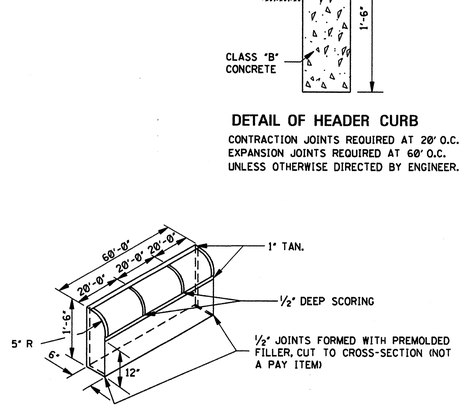

ISOMETRIC HEADER CURB DETAIL SHOWING JOINTS

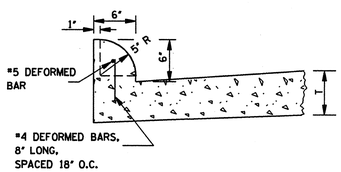

TYPE "2"
DETAIL OF INTEGRAL CURB

¼" EXPANSION JOINT. THE EXPANSION JOINT SHALL BE FORMED OF PREMOLDED JOINT FILLER CUT TO FULL CROSS-SECTION AND SHALL EXTEND TO THE FULL WIDTH AND DEPTH OF CONSTRUCTION.

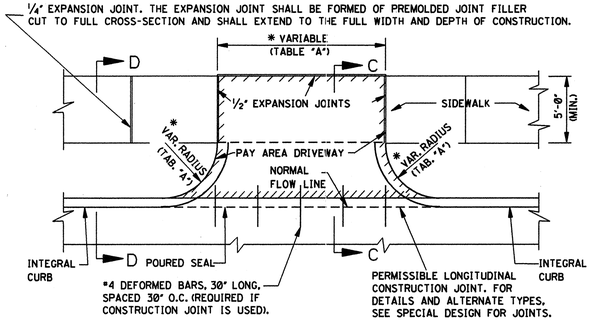

TYPE "2"
PLAN OF CONCRETE DRIVEWAY ACROSS SIDEWALK AREA

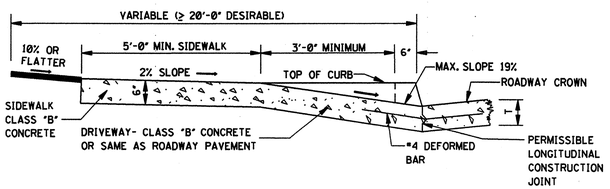

SECTION C–C

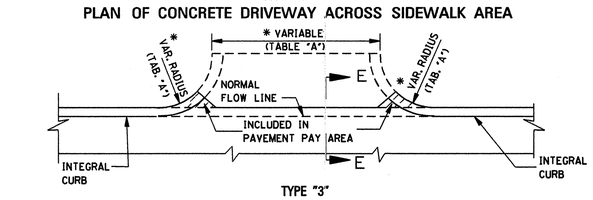

TYPE "3"
PLAN–CURB OMITTED FOR FUTURE DRIVEWAY CONSTRUCTION

NOTE: THIS TYPE CONSTRUCTION SHALL BE USED WHERE DESIGNATED ELSEWHERE ON PLANS OR BY THE ENGINEER.

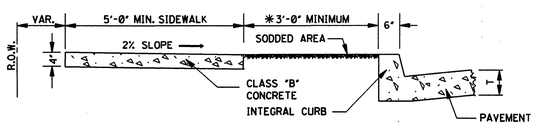

SECTION D–D

*NOTE: THE 3'-0" BUFFER SHOWN IS FOR A BUFFER ZONE. BUFFER ZONE IS NOT REQUIRED UNLESS INDICATED ELSEWHERE ON PLANS.

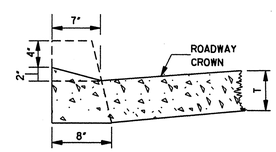

SECTION E–E

GENERAL NOTES:

1. THE STANDARD SPECIFICATIONS ADOPTED BY THE MISSISSIPPI DEPARTMENT OF TRANSPORTATION SHALL, UNLESS OTHERWISE SPECIFIED HEREIN, APPLY TO ALL ITEMS INCLUDED ON THIS DRAWING.
2. TRAVERSE CONTRACTION JOINTS ARE REQUIRED AT 20' ON CENTER FOR ALL CONCRETE DRIVEWAYS THAT EXTEND PAST THE END OF THE CURB RETURN. A ½" WIDE EXPANSION JOINT IS REQUIRED AT THE END OF THE CURB RETURN AND AT 60' ON CENTER THROUGHOUT THE LENGTH OF THE DRIVEWAY. A LONGITUDINAL CONTRACTION JOINT IS REQUIRED FOR ALL DRIVEWAYS EXCEEDING 20' IN WIDTH.
3. SEE SHEET CCR-1 FOR DETAILS OF CURB-CUT RAMPS.

DATE	REVISION	BY

MISSISSIPPI DEPARTMENT OF TRANSPORTATION
ROADWAY DESIGN DIVISION
STANDARD PLAN

DRIVEWAYS, INTEGRAL CURB & SIDEWALK

ENGLISH

WORKING NUMBER SD-2

ISSUE DATE: OCTOBER 1, 1998

SHEET NUMBER 288

STATE	PROJECT NO.
MISS.	

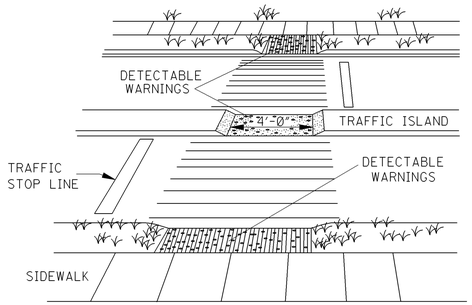

TRAFFIC ISLAND CUTAWAY

NOTE: PASSAGE THROUGH TRAFFIC ISLAND SHALL BE FLUSH WITH ROADWAY.

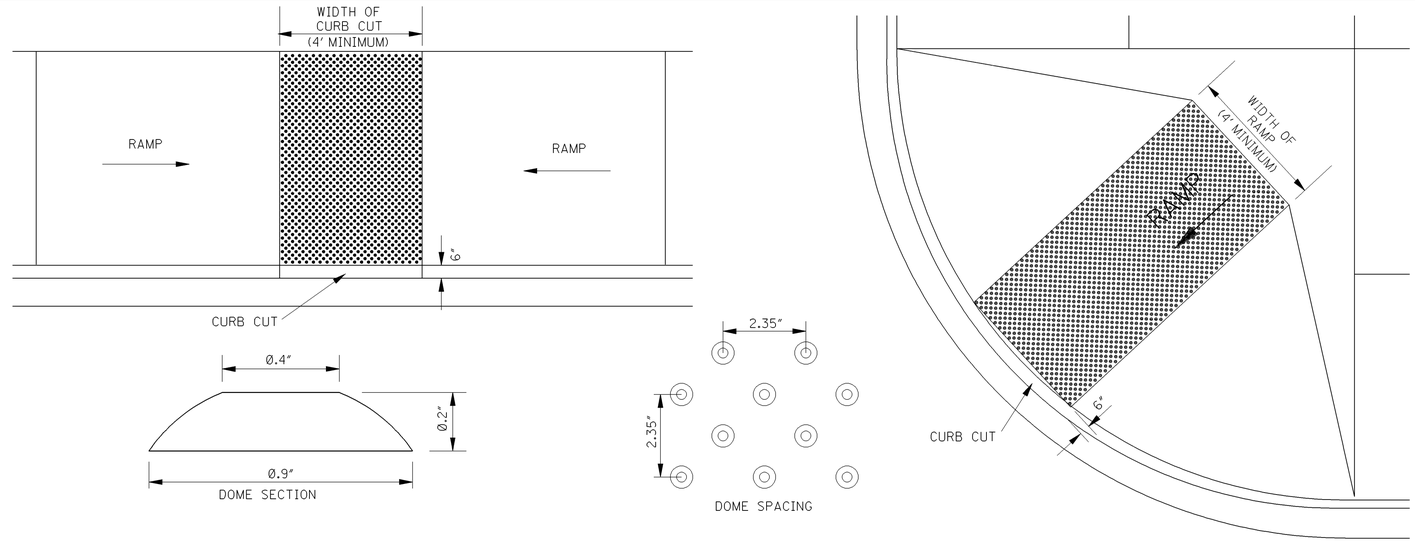

DETECTABLE WARNINGS (TRUNCATED DOMES) FOR BLIND & LOW VISION PEDESTRIANS

GENERAL NOTES:

1. LOCATION AND TYPE OF CURB RAMP SHALL BE AS SHOWN ON THE PLANS OR AS DIRECTED.
2. THE CURB RAMP SHALL BE PAID FOR AS SIDEWALK.
3. THE THICKNESS OF THE CURB RAMP SHALL BE A MINIMUM OF 4".
4. ALL RAMP SLOPES SHALL NOT BE STEEPER THAN 12:1.
5. DETECTABLE WARNINGS ARE REQ'D ON CURB CUT RAMPS AT ALL STREET CROSSINGS AND AT SIGNALIZED DRIVEWAY CROSSINGS.
6. THERE SHALL BE A MINIMUM OF 70% CONTRAST IN LIGHT REFLECTANCE BETWEEN THE DETECTABLE WARNING AREA AND THE ADJOINING AREAS, OR THE DETECTABLE AREA SHALL BE "SAFETY YELLOW".

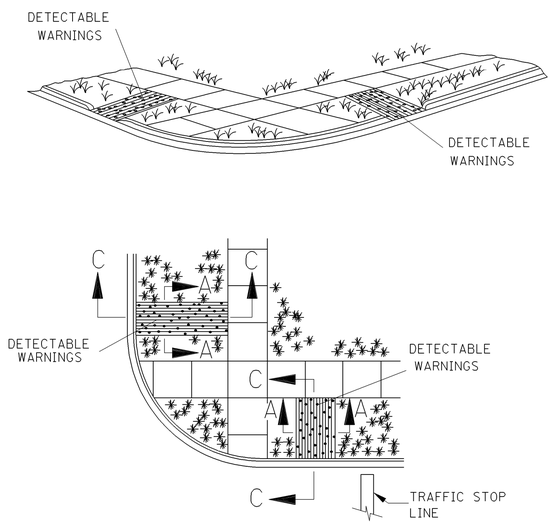

TYPE I

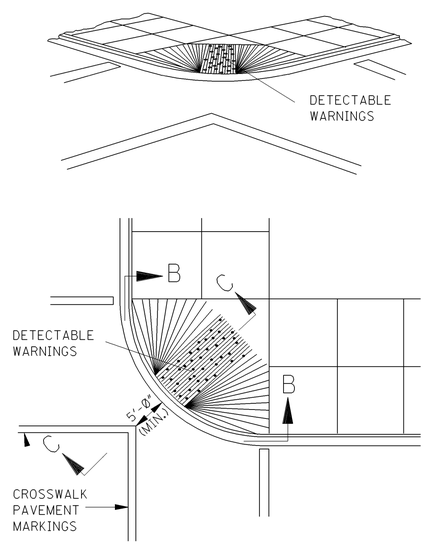

TYPE II

NOTE: IN NEW CONSTRUCTION, THE TYPE II DIAGONAL CURB RAMP SHALL ONLY BE USED IF OTHER CURB RAMP TYPES AS SHOWN ON THIS SHEET ARE NOT PRACTICAL FOR THE LOCATION.

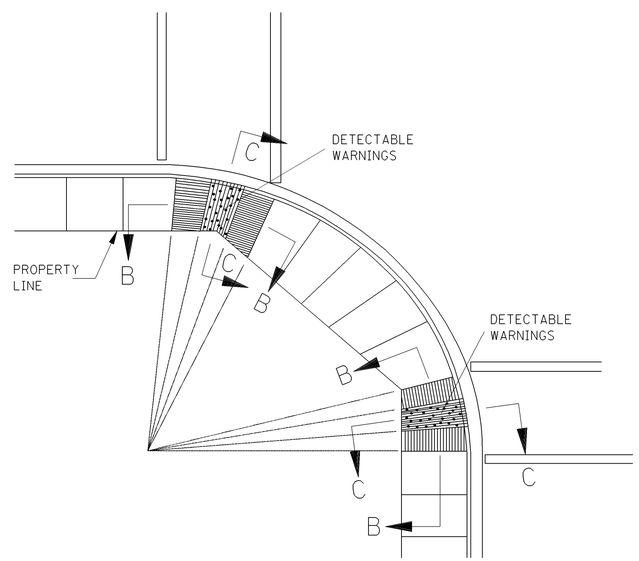

TYPE III

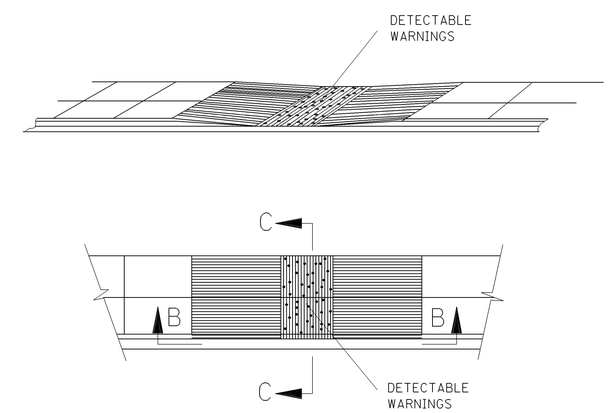

TYPE IV
(TANGENT)

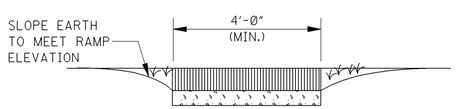

SECTION A–A

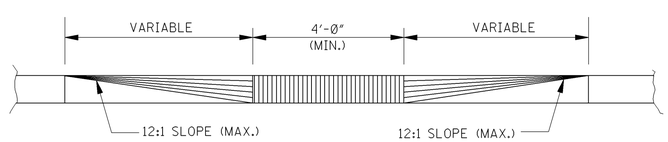

SECTION B–B

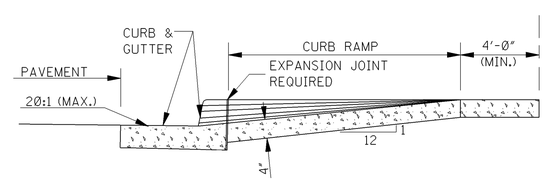

SECTION C–C

DATE	REVISION	BY
3-01-02	SHEET REDRAWN	S.W.R.

MISSISSIPPI DEPARTMENT OF TRANSPORTATION
ROADWAY DESIGN DIVISION
STANDARD PLAN

CURB – CUT RAMP

ENGLISH

WORKING NUMBER CCR-1

ISSUE DATE: OCTOBER 1, 1998

SHEET NUMBER 289

STATE	PROJECT NO.
MISS.	

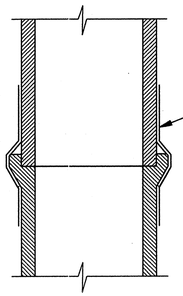

SECTION A–A

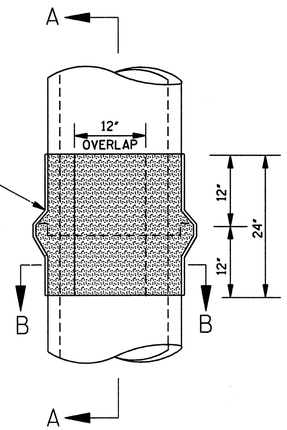

ELEVATION

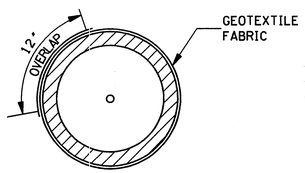

SECTION B–B

STACKED PIPE JOINTS

NOTE: EACH STACKED PIPE JOINT SHALL BE WRAPPED WITH 24" WIDE TYPE V GEOTEXTILE FABRIC (AASHTO M 288). THE FABRIC SHALL OVERLAP A MINIMUM OF 12" AT THE WRAP AND SHALL BE SECURED WITH STRING OR WIRE AS APPROVED BY THE ENGINEER PRIOR TO BACKFILLING. THE COST FOR THE MATERIALS AND LABOR SHALL BE ABSORBED.

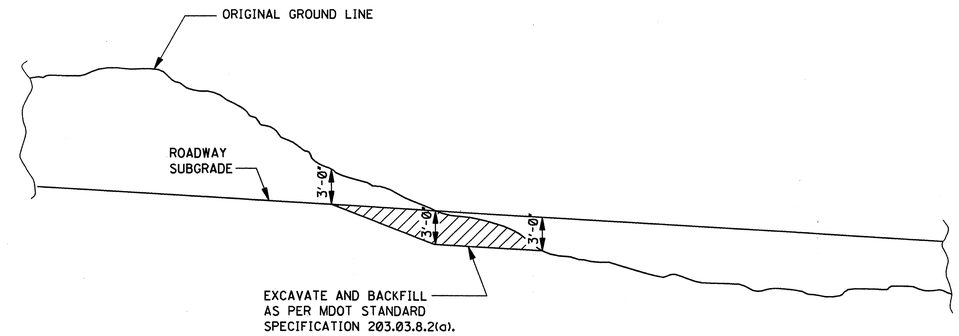

PROFILE SHOWING REQUIRED EXCAVATION AT GRADE POINTS

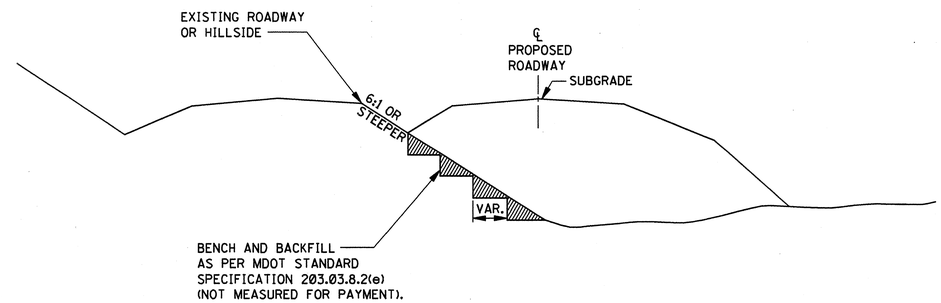

CROSS–SECTION SHOWING REQUIRED BENCHING
UNDER EMBANKMENTS ON STEEP SLOPES

EXCAVATION AT GRADE POINTS

DATE	REVISION	BY

MISSISSIPPI DEPARTMENT OF TRANSPORTATION
ROADWAY DESIGN DIVISION
STANDARD PLAN

MISCELLANEOUS DETAIL SHEET

1. STACKED PIPE JOINTS
2. EXCAVATION AT GRADE POINTS

ENGLISH

WORKING NUMBER
MDS-1

ISSUE DATE: OCTOBER 1, 1998

SHEET NUMBER
290

STATE	PROJECT NO.
MISS.	

FLUME – TYPE "A"
(INTERMEDIATE RUNOFF THROUGH CURB & GUTTER)

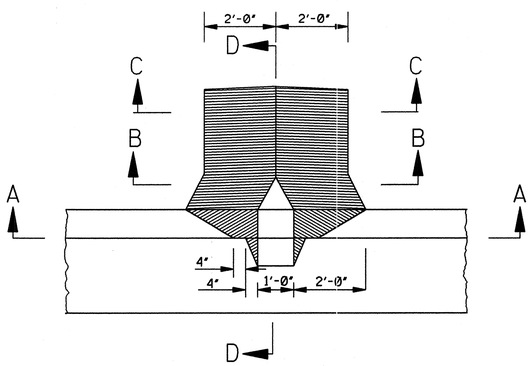

PLAN

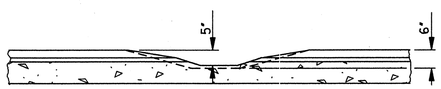

SECTION A–A

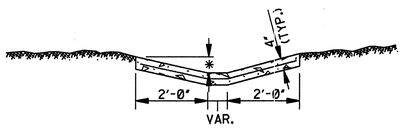

SECTION B–B
(TRANSITION SECTION)

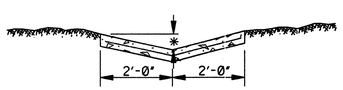

SECTION C–C
(DITCH SECTION)

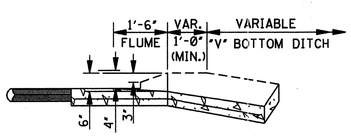

SECTION D–D

FLUME – TYPE "B"
(AT END OF BRIDGE)

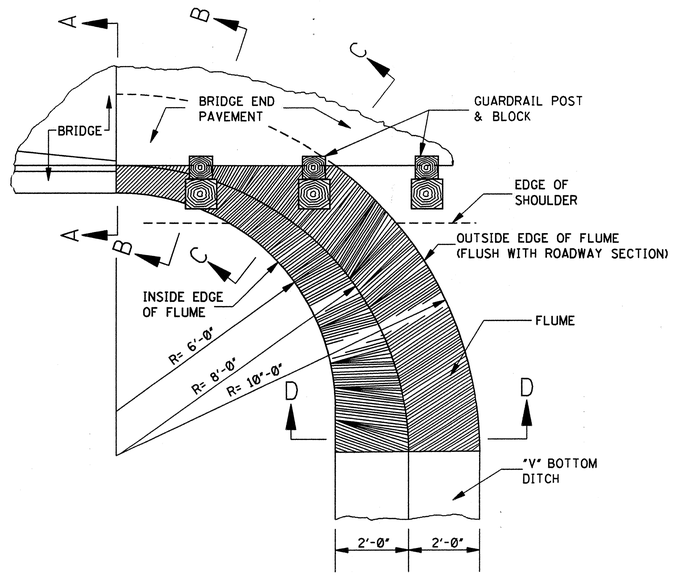

PLAN

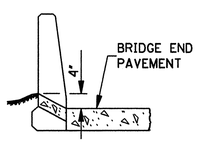

SECTION A–A
(AT BRIDGE END)

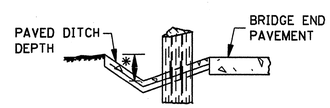

SECTION C–C
(AT EDGE OF SHOULDER)

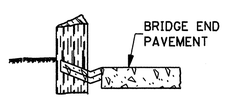

SECTION B–B

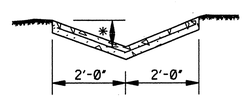

SECTION D–D
(AT "V" BOTTOM DITCH)

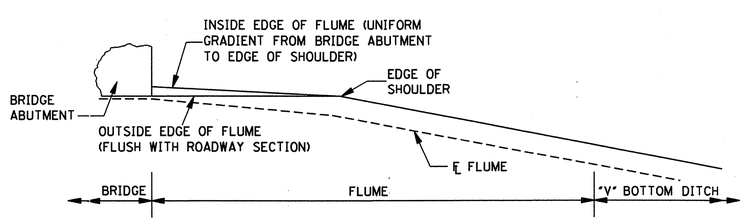

PROFILE

FLUME – TYPE "C"
(AT END OF CURB & GUTTER)

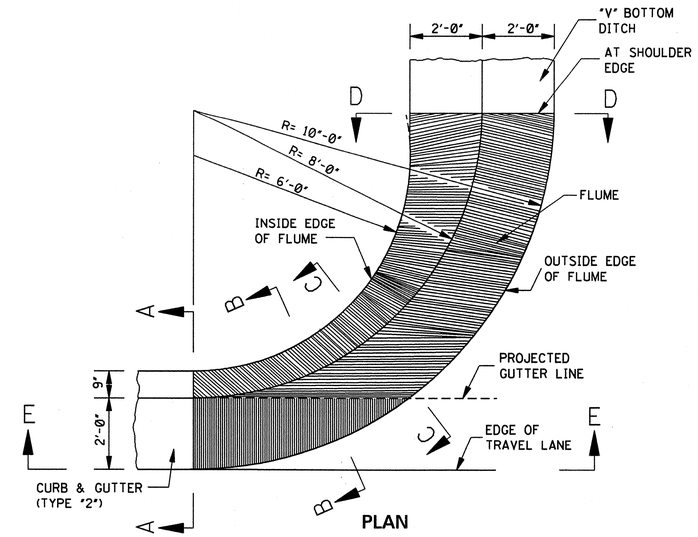

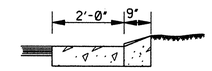

SECTION A–A
(AT END OF CURB & GUTTER)

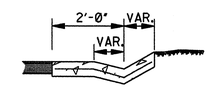

SECTION B–B

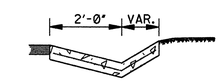

SECTION C–C
(AT EDGE OF PROJECTED GUTTER LINE)

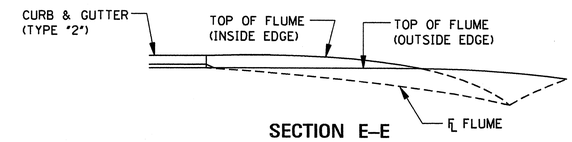

SECTION E–E

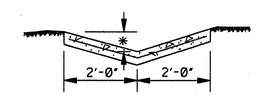

SECTION D–D
(AT EDGE OF SHOULDER)

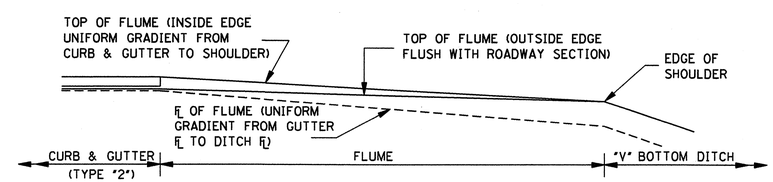

PROFILE

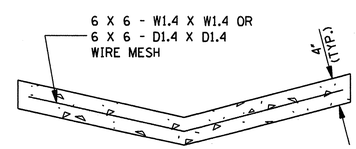

TYPICAL SECTION
(WIRE MESH REQUIREMENTS OF PAVED FLUME)

*1. THIS DIMENSION IS 6" FOR 4:1 SLOPES AND 8" FOR 3:1 SLOPES.

DATE	REVISION	BY

MISSISSIPPI DEPARTMENT OF TRANSPORTATION
ROADWAY DESIGN DIVISION
STANDARD PLAN

DETAILS OF PAVED FLUMES

ENGLISH

WORKING NUMBER PF-1

ISSUE DATE: OCTOBER 1, 1998

SHEET NUMBER 291

STATE	PROJECT NO.
MISS.	

CORRUGATED STEEL AND ALUMINUM PIPE (ROUND) H-20 LOADING

PIPE DIAMETER (in)	MINIMUM COVER FROM TOP OF PIPE TO TOP OF SUBGRADE (in)	MAXIMUM FILL HEIGHT ABOVE TOP OF PIPE (ft) — SHEET THICKNESS (in)				
		0.064 STEEL 0.060 ALUM. 16 GAGE	0.079 STEEL 0.075 ALUM. 14 GAGE	0.109 STEEL 0.105 ALUM. 12 GAGE	0.138 STEEL 0.135 ALUM. 10 GAGE	0.168 STEEL 0.164 ALUM. 8 GAGE
		2⅔" X ½" CORRUGATED STEEL RIVETED, WELDED OR HELICAL /		3" X 1" OR 5" X 1" CORRUGATED STEEL RIVETED, WELDED, HELICAL OR BOLTED		2⅔" X ½" CORRUGATED ALUMINUM RIVETED OR HELICAL
12"	12"	84' / - / 45'	91' / - / 45'	- / - / 78'	- / - / 81'	- / - / 84'
15"	12"	67' / - / -	73' / - / -	- / - / -	- / - / -	- / - / -
18"	12"	56' / - / 30'	61' / - / 30'	- / - / 52'	- / - / 54'	- / - / 56'
24"	12"	42' / - / 22'	46' / - / 22'	59' / - / 39'	- / - / 41'	- / - / 42'
30"	12"	34' / - / 18'	36' / - / 18'	47' / - / 31'	- / - / 32'	- / - / 34'
36"	12"	28' / 48' / 15'	30' / 60' / 15'	39' / 78' / 26'	41' / 89' / 27'	- / 101' / 28'
42"	12"	31' / 41' / -	43' / 51' / 26'	46' / 64' / 43'	48' / 71' / 43'	50' / 79' / 44'
48"	12"	27' / 36' / -	37' / 45' / -	45' / 57' / 40'	46' / 61' / 41'	47' / 66' / 43'
54"	12"	- / 32' / -	33' / 40' / -	43' / 52' / 35'	44' / 55' / 37'	45' / 59' / 38'
60"	12"	- / 29' / -	- / 36' / -	43' / 49' / -	43' / 51' / 33'	44' / 54' / 34'
66"	12"	- / 26' / -	- / 33' / -	42' / 47' / -	43' / 49' / 30'	43' / 51' / 31'
72"	12"	- / 24' / -	- / 30' / -	- / 44' / -	41' / 47' / -	43' / 49' / 29'
78"	12"	- / 22' / -	- / 28' / -	- / 41' / -	- / 46' / -	39' / 47' / -
84"	12"	- / 21' / -	- / 26' / -	- / 38' / -	- / 45' / -	35' / 46' / -
90"	12"	- / 19' / -	- / 24' / -	- / 35' / -	- / 43' / -	- / 45' / -
96"	12"	- / 18' / -	- / 22' / -	- / 33' / -	- / 40' / -	- / 44' / -
102"	24"	- / 17' / -	- / 21' / -	- / 31' / -	- / 38' / -	- / 42' / -
108"	24"	- / - / -	- / 20' / -	- / 30' / -	- / 35' / -	- / 39' / -
114"	24"	- / - / -	- / 19' / -	- / 28' / -	- / 34' / -	- / 37' / -
120"	24"	- / - / -	- / - / -	- / 27' / -	- / 32' / -	- / 35' / -

NOTE: THE AVERAGE INSIDE DIAMETER SHALL NOT VARY MORE THAN ONE (1) PERCENT OR ½", WHICHEVER IS GREATER, FROM THE NOMINAL DIAMETER WHEN MEASURED ON THE INSIDE CREST OF THE CORRUGATIONS (AASHTO M 36M/M 36 & AASHTO M 196M/M 196).

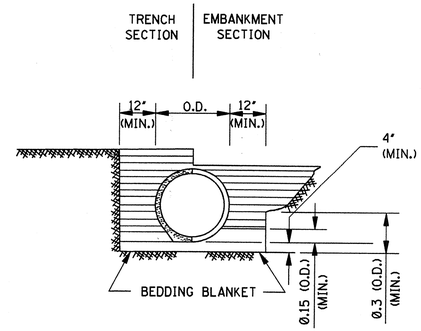

CLASS B

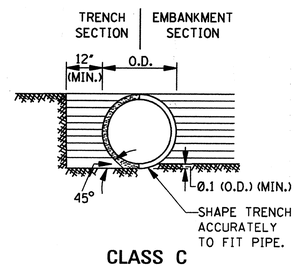

CLASS C

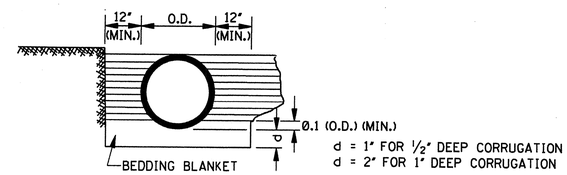

CLASS C MODIFIED

MAXIMUM HEIGHT OF FILL OVER REINFORCED CONCRETE PIPE

CLASS OF PIPE	TYPE OF BACKFILL	MAXIMUM COVER (ft) CLASS "C" BEDDING	MAXIMUM COVER (ft) CLASS "B" BEDDING
III	NORMAL	16'	-
IV	NORMAL	23'	28'
V	NORMAL	30'	36'
IV	IMPERFECT	-	90'
V	IMPERFECT	-	115'

NOTE: CLASS OF PIPE AND BEDDING TO BE CONSISTENT THROUGHOUT THE PIPE LENGTH.

MAXIMUM HEIGHT OF FILL OVER CLASS 2 NONREINFORCED CONCRETE PIPE, PERFORATED AND/OR PLAIN, FOR UNDERDRAINS

PIPE SIZE (in)	MAXIMUM COVER (ft) BEDDING CLASS "C"/CLASS "B" — TRENCH: B_d (in)	TRENCH: SAND & GRAVEL	TRENCH: DAMP CLAY	PROJECTING: POSITIVE $p = 0.7$; $R_{sd} = 0.7$
4"	2.00'	*	*	34'/42'
6"	2.00'	*	*	25'/30'
8"	2.25'	*	16'/ *	19'/24'
10"	2.50'	*	12'/20'	16'/19'
12"	2.75'	*	12'/18'	14'/17'

NOTES:
* 1. INDICATES NO LIMIT OF FILL HEIGHT (130 lbs/ft³).
2. TRENCH WIDTH (B_d) NO GREATER THAN 16" PLUS O.D.
3. FACTOR OF SAFETY IS 1.25 ON MINIMUM ULTIMATE STRENGTH.
4. MINIMUM COVER FOR HIGHWAY LOADS IS 18".
5. PERFORATED PIPE SHALL BE TYPE 1.

CORRUGATED METAL PIPE ARCHES H-20 LOADING

EQUIV. DIAMETER (in)	PIPE DIMENSION (SPAN X RISE) (in)	MINIMUM CORNER RADIUS (in)	MINIMUM COVER FROM TOP OF PIPE TO TOP OF SUBGRADE FOR 2 tons/ft² (in)	STEEL: MINIMUM THICKNESS REQUIRED (in)	STEEL: MAXIMUM FILL HEIGHT ABOVE TOP OF PIPE (ft) FOR THE FOLLOWING CORNER BEARING PRESSURE (tons/ft²): 2 tons/ft²	STEEL: 3 tons/ft² †	ALUMINUM: MINIMUM THICKNESS REQUIRED (in)	ALUMINUM: MAXIMUM FILL HEIGHT ABOVE TOP OF PIPE (ft) FOR THE FOLLOWING CORNER BEARING PRESSURE (tons/ft²): 2 tons/ft²	ALUMINUM: 3 tons/ft² †
				2⅔" X ½" CORRUGATION RIVETED, WELDED OR HELICAL			2⅔" X ½" CORRUGATION RIVETED OR HELICAL		
15"	17" X 13"	3"	18"	0.064"	13'	15'+	0.060"	15'	-
18"	21" X 15"	3"	18"	0.064"	12'	15'+	0.060"	14'	-
24"	28" X 20"	3"	18"	0.064"	10'	15'	0.060"	10'	15'+
30"	35" X 24"	3"	18"	0.079"	9'	14'	0.060"	9'	14'
36"	42" X 29"	3½"	18"	0.079"	9'	13'	0.075"	9'	13'
42"	49" X 33"	4"	18"	0.079"	8'	12'	0.105"	8'	12'
48"	57" X 38"	5"	18"	0.109"	8'	12'	0.135"	8'	12'
54"	64" X 43"	6"	18"	0.109"	8'	12'	0.135"	8'	12'
60"	71" X 47"	7"	18"	0.138"	8'	12'	0.164"	8'	12'
66"	77" X 52"	8"	18"	0.168"	8'	12'			
72"	83" X 57"	9"	18"	0.168"	9'	13'			
				5" X 1" OR 3" X 1" CORRUGATION RIVETED, WELDED OR HELICAL					
36"	40" X 31"	5"	18"	0.079"	12'	15'+			
42"	46" X 36"	6"	18"	0.079"	12'	15'+			
48"	53" X 41"	7"	18"	0.079"	12'	15'+			
54"	60" X 46"	8"	18"	0.079"	12'	15'+			
60"	66" X 51"	9"	18"	0.079"	12'	15'+			
66"	73" X 55"	12"	18"	0.079"	15'+	-			
72"	81" X 59"	14"	18"	0.079"	15'	-			
78"	87" X 63"	14"	18"	0.079"	14'	15'+			
84"	95" X 67"	16"	18"	0.109"	13'	15'+			
90"	103" X 71"	16"	24"	0.109"	12'	15'+			
96"	112" X 75"	18"	24"	0.109"	11'	15'+			

NOTES:
1. THE AVERAGE INSIDE DIAMETER SHALL NOT VARY MORE THAN ONE (1) PERCENT OR ½", WHICHEVER IS GREATER, FROM THE NOMINAL DIAMETER WHEN MEASURED ON THE INSIDE CREST OF THE CORRUGATIONS. (AASHTO M 36M/M 36 & AASHTO M 196M/M 196).

† 2. BEARING PRESSURES EXCEEDING 2 tons/ft² REQUIRED FOR GIVEN FILL HEIGHT SHALL HAVE FOUNDATION MATERIALS INVESTIGATED TO DETERMINE BEARING CAPACITY.

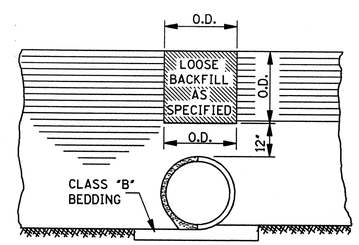

SECTION A-A

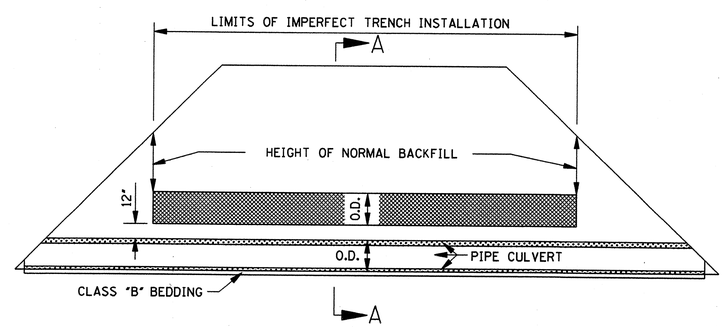

ELEVATION

IMPERFECT TRENCH INSTALLATION

GENERAL NOTES:

1. MINIMUM SPACING BETWEEN MULTIPLE LINES OF PARALLEL PIPE SHALL BE THE DISTANCE REQUIRED FOR INSTALLING THE ADJACENT FLARED END SECTIONS OR AS SHOWN ON THE HEADWALL DRAWINGS FOR CONDUITS REQUIRING HEADWALLS.

2. UNLESS OTHERWISE INDICATED, THE TOP OF THE PIPE SHALL BE BELOW THE TOP OF THE SUBGRADE, AND A MINIMUM OF 12" OF COVER OVER THE TOP OF THE PIPE SHALL BE MAINTAINED BETWEEN THE SHOULDER LINES.

3. WHERE PRE-BED PIPE IS INSTALLED, FLARED END SECTIONS FROM OTHER MANUFACTURERS MAY BE JOINED TO PRE-BED PIPE PROVIDED A CONCRETE COLLAR IS PLACED AT THE CONTRACTORS EXPENSE AND A DEFORMATION TO THE PIPE'S FLOWLINE IS NOT EVIDENT ON FINAL PLACEMENT.

DATE	REVISION	BY

MISSISSIPPI DEPARTMENT OF TRANSPORTATION
ROADWAY DESIGN DIVISION
STANDARD PLAN

PIPE CULVERT INSTALLATION

ENGLISH

WORKING NUMBER PI-1

ISSUE DATE: OCTOBER 1, 1998

SHEET NUMBER 300

STATE	PROJECT NO.
MISS.	

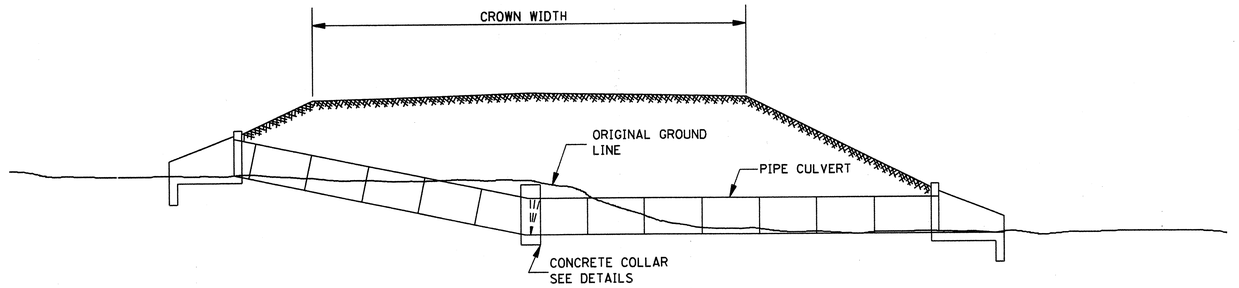

TYPICAL INSTALLATION FOR PIPE CULVERT WITH BROKEN FLOW LINE

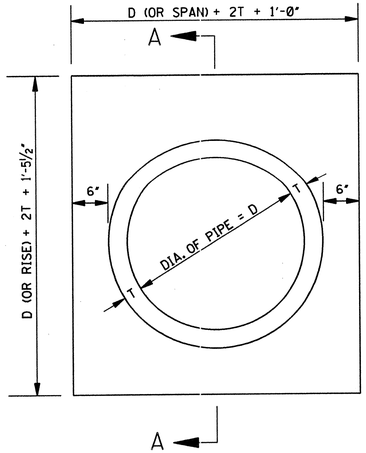

ELEVATION OF CONCRETE COLLAR

NOTE: CIRCULAR PIPE IS SHOWN, ARCH PIPE IS SIMILAR.

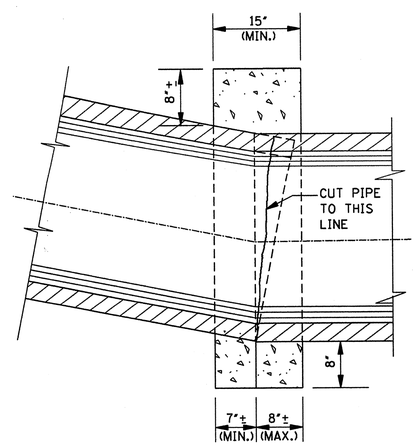

SECTION A–A

GENERAL NOTE:

1. THE FOLLOWING QUANTITIES SHALL BE THE BASIS FOR PAYMENT UNLESS AUTHORIZED MODIFICATIONS ARE MADE:

QUANTITIES FOR CONCRETE COLLAR FOR PIPE CULVERTS

CIRCULAR PIPE		ARCH PIPE	
DIA. OF PIPE	CLASS "B" CONCRETE (yd^3)	SIZE OF PIPE	CLASS "B" CONCRETE (yd^3)
12"	0.240		
15"	0.260	18 x 11	0.280
18"	0.320	22 x 13	0.310
24"	0.410	29 x 18	0.410
30"	0.510	36 x 23	0.490
36"	0.620	44 x 27	0.600
42"	0.730	51 x 31	0.690
48"	0.850	58 x 36	0.820
54"	0.980	65 x 40	0.920
60"	1.110	73 x 45	1.070
66"	1.248	88 x 54	1.366
72"	1.393		

DATE	REVISION	BY

MISSISSIPPI DEPARTMENT OF TRANSPORTATION
ROADWAY DESIGN DIVISION
STANDARD PLAN

CONCRETE PIPE COLLAR

ENGLISH

WORKING NUMBER PC-1

ISSUE DATE: OCTOBER 1, 1998

SHEET NUMBER 301

STATE	PROJECT NO.
MISS.	

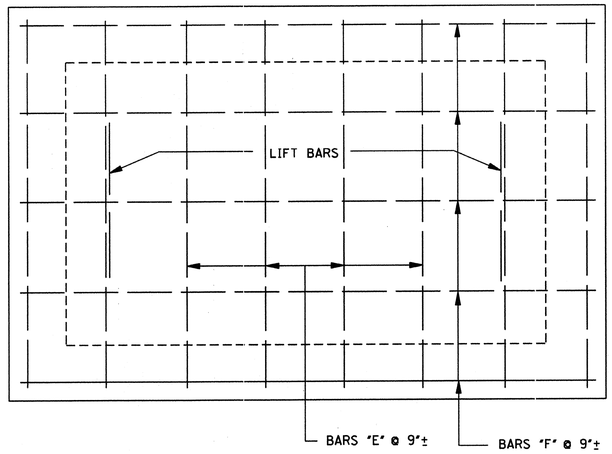

PLAN OF COVER

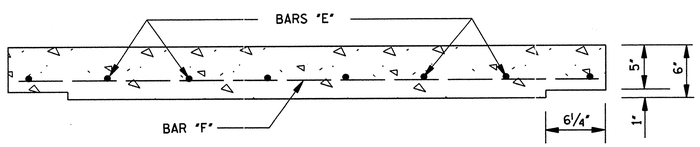

ELEVATION OF COVER

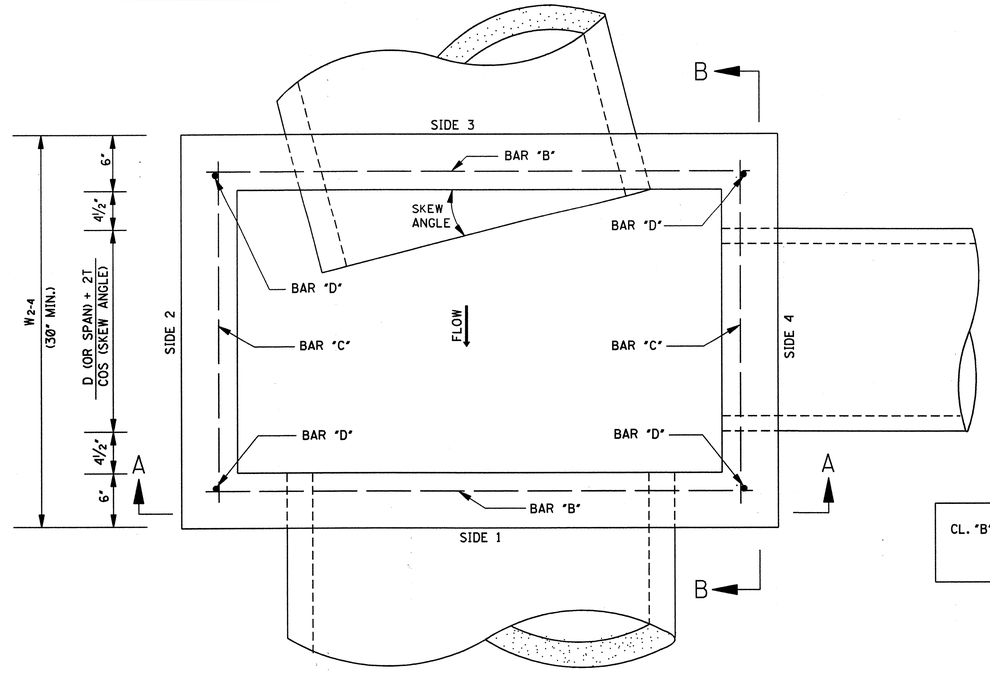

PLAN

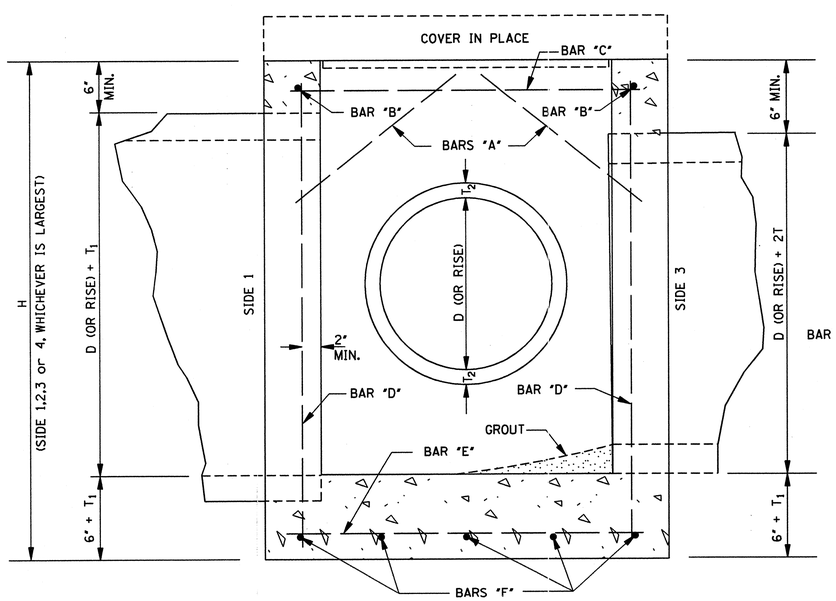

SECTION B–B

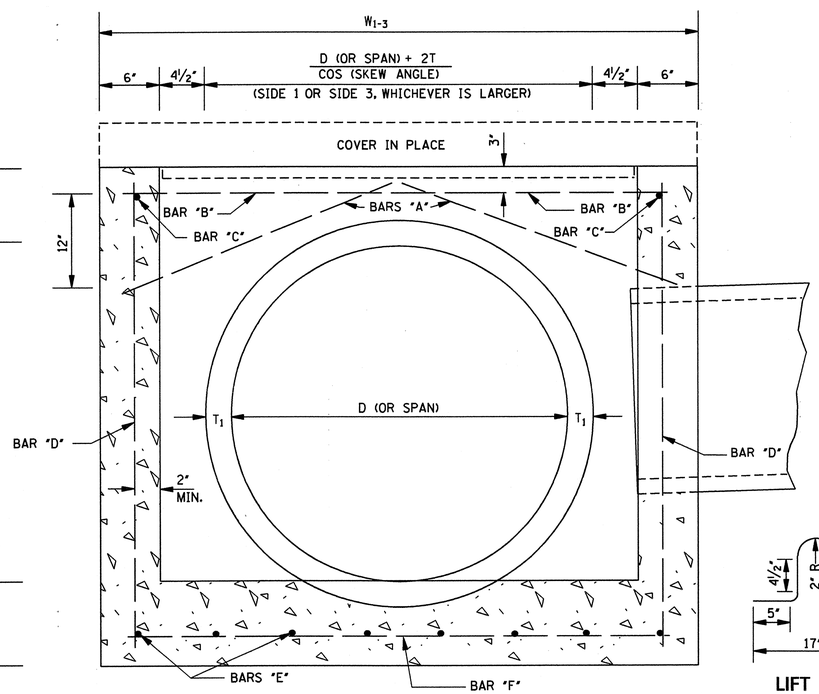

SECTION A–A

REINFORCING BAR LIST			
BAR	SIZE	NUMBER REQUIRED	LENGTH
A	#4	2 PER PIPE OPENING	$\sqrt{196" + \left(\frac{W^*}{2} + 2"\right)^2}$
B	#4	2	W_{1-3} - 6"
C	#4	2	W_{2-4} - 6"
D	#4	4	H - 6"
E	#4	$2\left[\left(\frac{W_{1-3}}{9"}\right)^{**} + 1\right]$	W_{2-4} - 4"
F	#4	$2\left[\left(\frac{W_{2-4}}{9"}\right)^{**} + 1\right]$	W_{1-3} - 4"

NOTE: VARIABLES AND DESIGNATIONS ARE AS FOLLOWS:
D (OR SPAN) = PIPE DIAMETER (OR SPAN)
W_{1-3} = WIDTH OF SIDE 1 & SIDE 3
W_{2-4} = WIDTH OF SIDE 2 & SIDE 4
W^* = W_{1-3} OR W_{2-4} (SIDE OF ENTERING PIPE)
** = ROUND TO NEAREST WHOLE NUMBER

CL. "B" CONC. (yd^3) = [(Q1 + Q2) / 46,656] - ∑ PIPE OPENING DEDUCTIONS
WHERE: $Q1 = [5"W_{1-3}W_{2-4}] + [1"(W_{1-3} - 12.5")(W_{2-4} - 12.5")] + [(T_1 + 6")W_{1-3}W_{2-4}]$
$Q2 = 12"[H - (T_1 + 6")][(W_{1-3} - 12") + W_{2-4}]$

COMMON PIPE SIZE					
CIRCULAR PIPE				ARCH PIPE		
PIPE SIZE	T	PIPE OPENING DEDUCTION (yd^3)		PIPE SIZE	T	PIPE OPENING DEDUCTION (yd^3)
18"	2½"	0.053		22" x 13"	2½"	0.053
24"	3"	0.091		29" x 18"	3"	0.087
30"	3½"	0.138		36" x 23"	3½"	0.129
36"	4"	0.196		44" x 27"	4"	0.185
42"	4½"	0.263		51" x 31"	4½"	0.245
48"	5"	0.340		58" x 36"	5"	0.318
54"	5½"	0.427		65" x 40"	5½"	0.394
60"	6"	0.524		73" x 45"	6"	0.489
66"	6½"	0.630				
72"	7"	0.747				

GENERAL NOTES:

1. REINFORCING STEEL QUANTITIES TO BE COMPUTED FROM BAR LIST AND SHOWN ELSEWHERE ON THE PLANS.
2. QUANTITIES FOR JUNCTION BOXES SHOWN ON THE PLANS WILL BE THE BASIS FOR PAYMENT UNLESS AUTHORIZED MODIFICATIONS ARE MADE.
3. CONCRETE SHALL BE CLASS "B" AND REINFORCING STEEL SHALL BE DEFORMED BARS.
4. SIDE 1 OF THE JUNCTION BOX WILL ALWAYS BE THE OUTFLOW SIDE.
5. IF PIPES ARE SKEWED MORE THAN 15° OR IF SKEWED PIPES PRODUCE CONFLICTS WITH ANOTHER OPENING, THE PIPE SHALL BE BROKEN BACK TO THE WALL OF THE JUNCTION BOX.

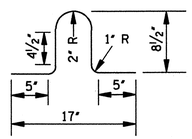

LIFT BAR

NOTE: LIFT BAR TO BE FABRICATED FROM A #4 BAR 30" LONG. TWO LIFT BARS ARE REQUIRED. REINFORCING STEEL FOR 2 LIFT BARS = 3.3 lbs.

MISSISSIPPI DEPARTMENT OF TRANSPORTATION
ROADWAY DESIGN DIVISION
STANDARD PLAN

JUNCTION BOX FOR PIPE CULVERTS

DATE	REVISION	BY

ISSUE DATE: OCTOBER 1, 1998

WORKING NUMBER JB-1

SHEET NUMBER 302

STATE	PROJECT NO.
MISS.	

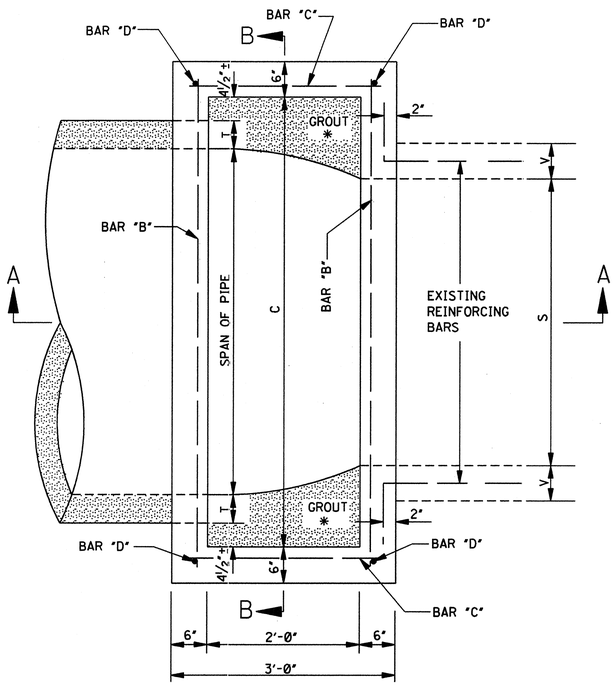

PLAN

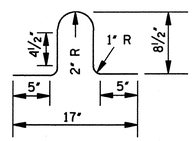

LIFT BAR

NOTE: LIFT BAR TO BE FABRICATED FROM A #4 BAR 30" LONG. TWO LIFT BARS ARE REQUIRED. REINFORCING STEEL FOR 2 LIFT BARS = 3.3 lbs.

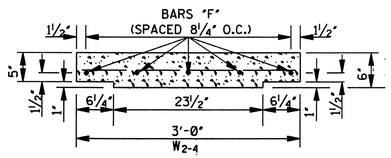

SECTION C–C

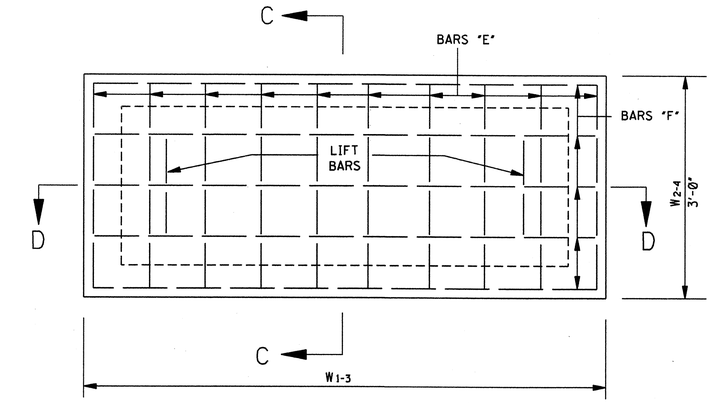

PLAN OF COVER

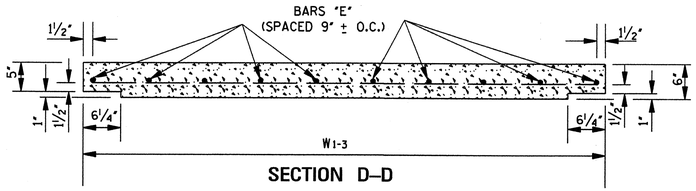

SECTION D–D

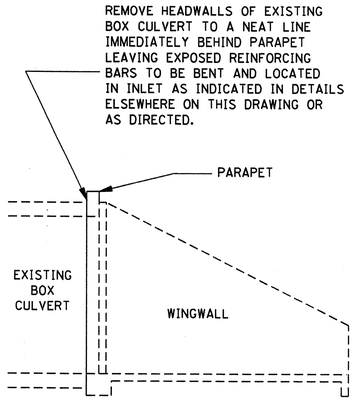

HEADWALL REMOVAL DETAILS

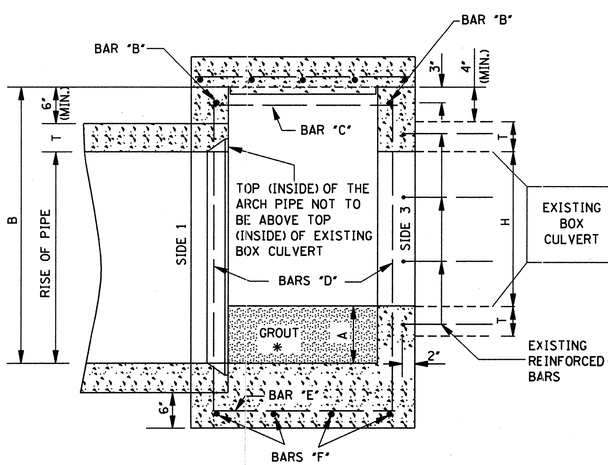

SECTION A–A DOWNSTREAM

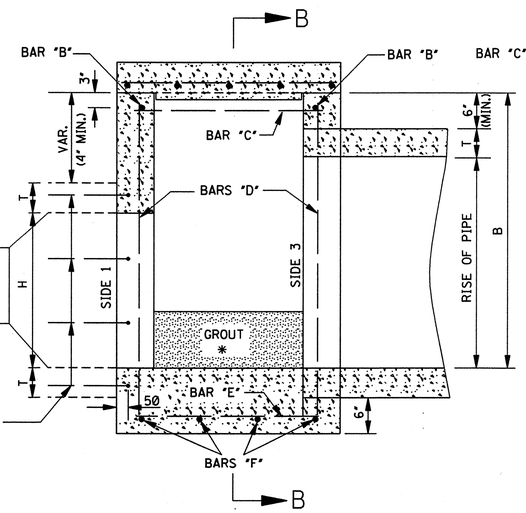

SECTION A–A UPSTREAM

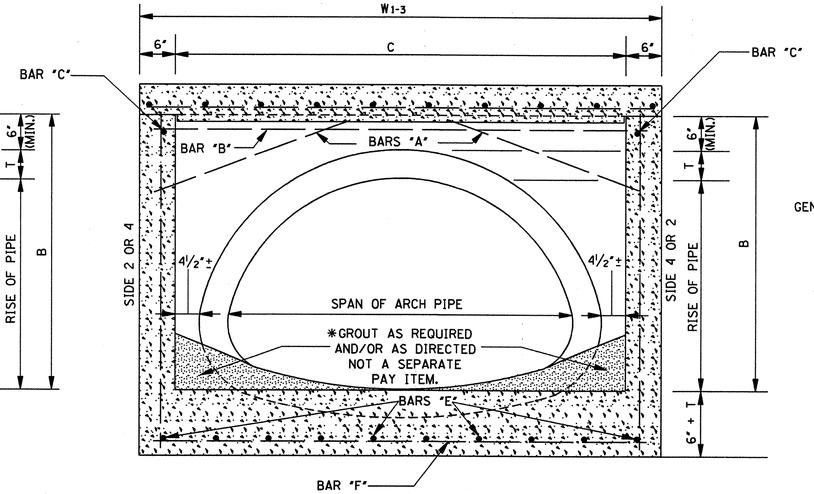

SECTION B–B

GENERAL NOTES:

1. THE STANDARD SPECIFICATIONS ADOPTED BY THE MISSISSIPPI DEPARTMENT OF TRANSPORTATION SHALL APPLY TO ITEMS UNLESS OTHERWISE SPECIFIED.
2. THE QUANTITIES SHOWN WILL BE USED AS THE BASIS FOR PAYMENT UNLESS THIS DRAWING IS MODIFIED.
3. CONCRETE SHALL BE CLASS "B" AND REINFORCING STEEL SHALL BE SIZE #4 DEFORMED BARS.
4. SIDE 1 OF THE JUNCTION BOX WILL ALWAYS BE THE OUTFLOW SIDE.
5. ESTIMATE AN ADDITIONAL 3.3 lbs. FOR 2 LIFT BARS.
6. CONCRETE QUANTITIES SHOWN HAVE BEEN ADJUSTED FOR BOX & PIPE OPENING DEDUCTIONS.

DIMENSIONS OF EXISTING BOX CULVERT				DIMENSIONS OF JUNCTION BOX REQUIRED			DIMENSIONS OF PRECAST COVER		DIMENSIONS OF ARCH PIPE REQUIRED				CLASS "B" STRUCTURAL CONCRETE (yd^3)	REINFORCING STEEL (lbs)	BAR LIST					
S	H	T	V	A	B	C	W_{1-3}	W_{2-4}	S	R	L	T			"A"	"B"	"C"	"D"	"E"	"F"
2'	2'	6"	6"	0"	32½"	52"	5'-4"	3'	36"	23"	6"	3½"	1.532	78	2 @ 3'-1"	2 @ 4'-10"	2 @ 2'-6"	4 @ 3'-3"	16 @ 2'-6"	9 @ 4'-10"
3'	2'	6½"	6"	3"	37"	61"	6'-1"	3'	44"	27"	8"	4"	1.764	89	2 @ 3'-5"	2 @ 5'-7"	2 @ 2'-6"	4 @ 3'-8"	18 @ 2'-6"	9 @ 5'-7"
4'	2'	7"	6"	7"	41½"	69"	6'-9"	3'	51"	31"	8"	4½"	1.996	99	2 @ 3'-9"	2 @ 6'-3"	2 @ 2'-6"	4 @ 4'-1"	20 @ 2'-6"	9 @ 6'-3"
5'	2'	7½"	6"	12"	47"	77"	7'-5"	3'	58"	36"	8"	5"	2.258	105	2 @ 4'-1"	2 @ 6'-11"	2 @ 2'-6"	4 @ 4'-7"	20 @ 2'-6"	9 @ 6'-11"
3'	3'	6½"	6"	0"	45½"	69"	6'-9"	3'	51"	31"	8"	4½"	1.995	99	2 @ 3'-9"	2 @ 6'-3"	2 @ 2'-6"	4 @ 4'-5"	20 @ 2'-6"	9 @ 6'-3"
4'	3'	7"	6"	0"	47"	77"	7'-5"	3'	58"	36"	8"	5"	2.238	105	2 @ 4'-1"	2 @ 6'-11"	2 @ 2'-6"	4 @ 4'-7"	20 @ 2'-6"	9 @ 6'-11"
5'	3'	7½"	6½"	4"	51½"	85"	8'-1"	3'	65"	40"	8"	5½"	2.469	115	2 @ 4'-4"	2 @ 7'-7"	2 @ 2'-6"	4 @ 5'-0"	22 @ 2'-6"	9 @ 7'-7"
6'	3'	8"	6½"	9"	57"	94"	8'-10"	3'	73"	45"	8"	6"	2.767	126	2 @ 4'-9"	2 @ 8'-4"	2 @ 2'-6"	4 @ 5'-6"	24 @ 2'-6"	9 @ 8'-4"

DATE	REVISION	BY

MISSISSIPPI DEPARTMENT OF TRANSPORTATION
ROADWAY DESIGN DIVISION
STANDARD PLAN

JUNCTION BOX FOR BOX CULVERT TO CONCRETE ARCH PIPE

ENGLISH

WORKING NUMBER JB-1A

ISSUE DATE: OCTOBER 1, 1998

SHEET NUMBER 303

STATE	PROJECT NO.
MISS.	

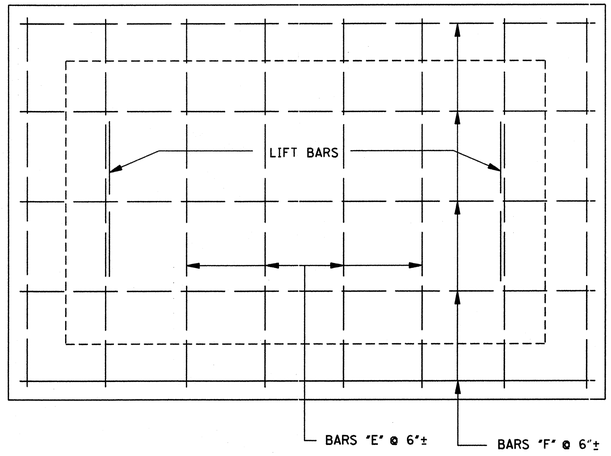

PLAN OF COVER

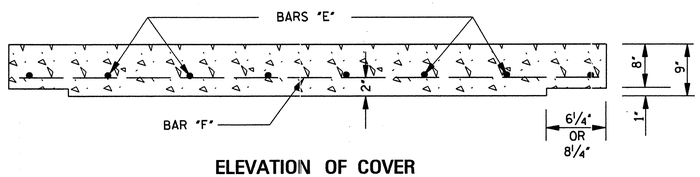

ELEVATION OF COVER

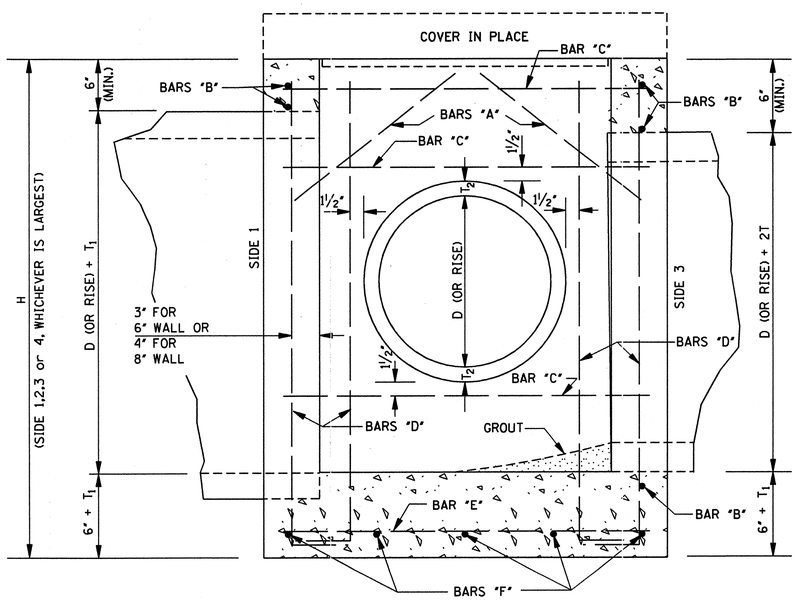

SECTION B–B

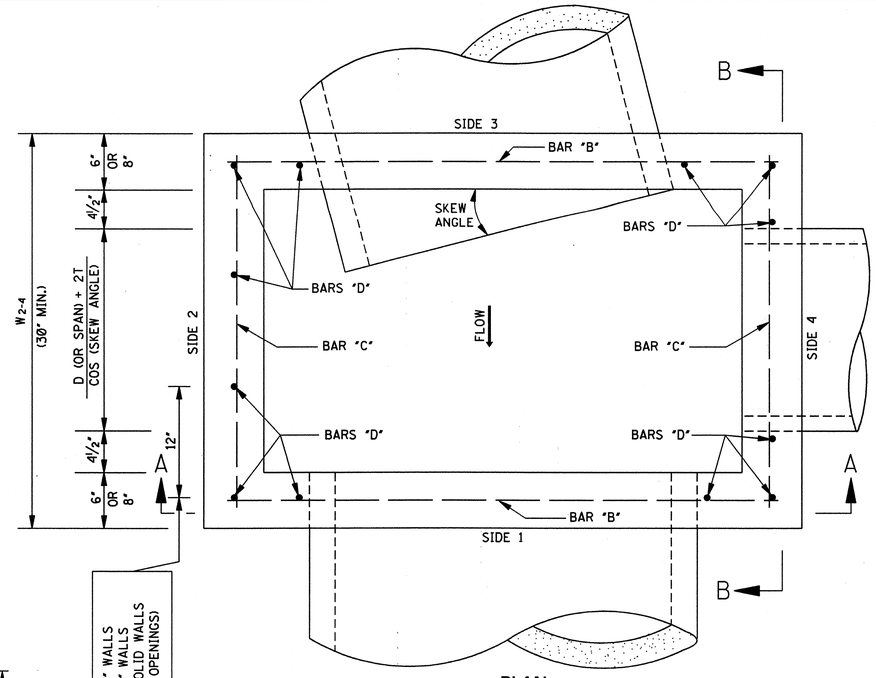

PLAN

#6 BARS FOR 6" WALLS
#7 BARS FOR 8" WALLS
REQUIRED ON SOLID WALLS
ONLY (NO PIPE OPENINGS)

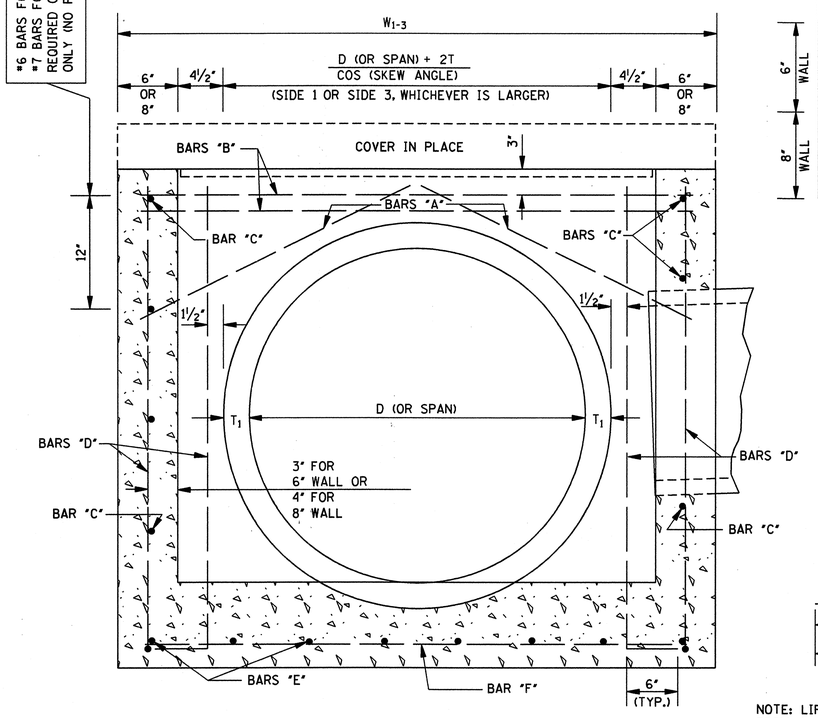

SECTION A–A

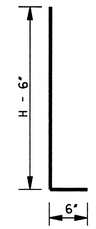

BAR "D"

REINFORCING BAR LIST

BAR	SIZE	NUMBER REQUIRED	LENGTH
"A"	#4	2 PER PIPE OPENING	$\sqrt{196" + \left(\frac{W^*}{2} + 2"\right)^2}$
"B"	#6 FOR 6" WALL	2 + [2 PER OPENING SIDE 3] + [1 PER SIDE 1] + [12" O.C. FOR SOLID WALL]	W_{1-3} - 4"
"C"	#7 FOR 8" WALL	2 + [2 PER OPENING] + [12" O.C. FOR SOLID WALL]	W_{2-4} - 4"
"D"		4 + [2 PER OPENING] + [12" O.C. FOR SOLID WALL]	H
"E"	#6	$2\left[\left(\frac{W_{1-3}}{6"}\right)^{**} + 1\right]$	W_{2-4} - 4"
"F"	#6	$2\left[\left(\frac{W_{2-4}}{6"}\right)^{**} + 1\right]$	W_{1-3} - 4"

NOTE: VARIABLES AND DESIGNATIONS ARE AS FOLLOWS:
D (OR SPAN) = PIPE DIAMETER (OR SPAN)
W_{1-3} = WIDTH OF SIDE 1 & SIDE 3
W_{2-4} = WIDTH OF SIDE 2 & SIDE 4
W* = W_{1-3} OR W_{2-4} (SIDE OF ENTERING PIPE)
** = ROUND TO NEAREST WHOLE NUMBER

CL. "B" CONC. (yd^3) = [(Q1 + Q2) / 46,656] - $\sum$ PIPE OPENING DEDUCTIONS

WHERE: 6" WALL

$Q1 = [8"W_{1-3}W_{2-4}] + [1"(W_{1-3} - 12.5")(W_{2-4} - 12.5")] + [(T_1 + 6")W_{1-3}W_{2-4}]$

$Q2 = 12"[H - (T_1 + 6")][(W_{1-3} - 12") + W_{2-4}]$

OR: 8" WALL

$Q1 = [8"W_{1-3}W_{2-4}] + [1"(W_{1-3} - 16.5")(W_{2-4} - 16.5")] + [(T_1 + 6")W_{1-3}W_{2-4}]$

$Q2 = 16"[H - (T_1 + 6")][(W_{1-3} - 16") + W_{2-4}]$

COMMON PIPE SIZE

	CIRCULAR PIPE				ARCH PIPE				
	PIPE SIZE	T	PIPE OPENING DEDUCTION (yd^3) 6" WALL	PIPE OPENING DEDUCTION (yd^3) †8" WALL	PIPE SIZE	T	PIPE OPENING DEDUCTION (yd^3) 6" WALL	PIPE OPENING DEDUCTION (yd^3) †8" WALL	
6" WALL	18"	2½"	0.053	0.071	22" X 13"	2½"	0.053	0.071	6" WALL
	24"	3"	0.091	0.121	29" X 18"	3"	0.087	0.116	
	30"	3½"	0.138	0.184	36" X 23"	3½"	0.129	0.172	
	36"	4"	0.196	0.261	44" X 27"	4"	0.185	0.247	
	42"	4½"	0.263	0.350	51" X 31"	4½"	-	0.327	
8" WALL	48"	5"	-	0.453	58" X 36"	5"	-	0.424	8" WALL
	54"	5½"	-	0.569	65" X 40"	5½"	-	0.525	
	60"	6"	-	0.699	73" X 45"	6"	-	0.652	
	66"	6½"	-	0.840					
	72"	7"	-	0.996					

† NOTE: IF ANY PIPE REQUIRING A 8" WALL IS USED, ALL WALLS SHALL BE 8" REGARDLESS OF PIPE SIZE.

GENERAL NOTES:

1. REINFORCING STEEL QUANTITIES TO BE COMPUTED FROM BAR LIST AND SHOWN ELSEWHERE ON THE PLANS.
2. QUANTITIES FOR JUNCTION BOXES SHOWN ON THE PLANS WILL BE THE BASIS FOR PAYMENT UNLESS AUTHORIZED MODIFICATIONS ARE MADE.
3. CONCRETE SHALL BE CLASS "B" AND REINFORCING STEEL SHALL BE DEFORMED BARS, ASTM A 615, GRADE 60 OR AASHTO M 31, GRADE 60.
4. SIDE 1 OF THE JUNCTION BOX WILL ALWAYS BE THE OUTFLOW SIDE.
5. IF PIPES ARE SKEWED MORE THAN 15° OR IF SKEWED PIPES PRODUCE CONFLICTS WITH ANOTHER OPENING, THE PIPE SHALL BE BROKEN BACK TO THE WALL OF THE JUNCTION BOX.

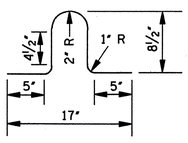

LIFT BAR

NOTE: LIFT BAR TO BE FABRICATED FROM A #4 BAR 30" LONG. TWO LIFT BARS ARE REQUIRED. REINFORCING STEEL FOR 2 LIFT BARS = 3.3 lbs.

DATE	REVISION	BY

MISSISSIPPI DEPARTMENT OF TRANSPORTATION
ROADWAY DESIGN DIVISION
STANDARD PLAN

JUNCTION BOX TYPE 2 FOR TRAFFIC LOAD
(MAXIMUM "W" = 9'-3")

ENGLISH

WORKING NUMBER JB-2

ISSUE DATE: OCTOBER 1, 1998

SHEET NUMBER 304

STATE	PROJECT NO.
MISS.	

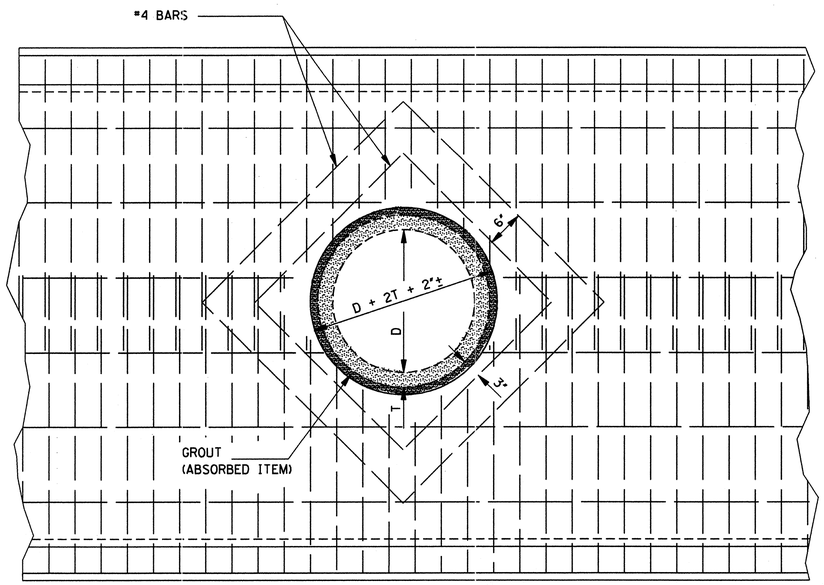

ELEVATION SHOWING CIRCULAR PIPE
STUBBED INTO BOX CULVERT BARREL OR WING–WALL

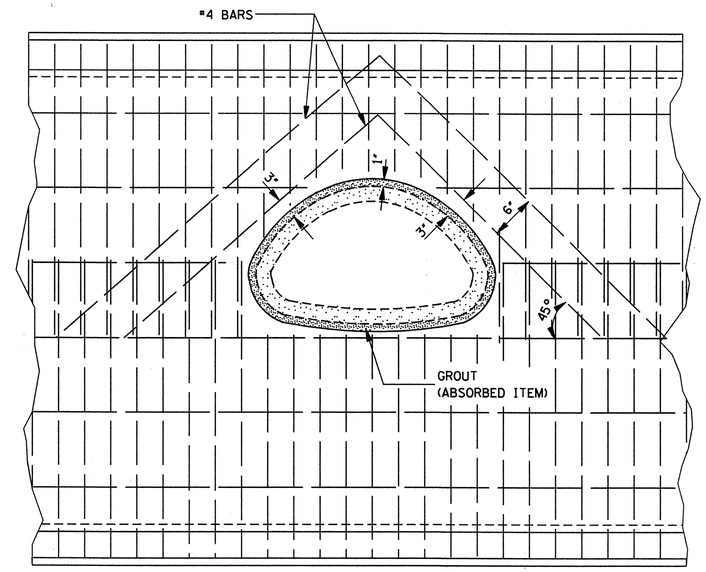

ELEVATION SHOWING ARCH PIPE STUBBED
INTO BOX CULVERT BARREL OR WING–WALL

BAR LIST		
PIPE SIZE	#4 BARS	
	NO.	LGTH.
18"	4	2'-6"
	4	3'-6"
24"	4	3'-1"
	4	4'-1"
30"	4	3'-8½"
	4	4'-8½"
22" X 13"	2	3'-10"
	2	4'-9"
	1	5'-4"
29" X 18"	2	4'-6"
	2	5'-5"
	1	6'-3"

NOTE:

1. A 24" DIAMETER PIPE IS THE MAXIMUM SIZE THAT MAY BE STUBBED INTO A 54" DIAMETER PIPE.
2. A 60" DIAMETER PIPE IS THE MINIMUM SIZE THAT A 30" DIAMETER PIPE MAY BE STUBBED INTO.

GENERAL NOTES:

1. PAYMENT FOR WORK AND MATERIALS FOR STUBBING A PIPE CULVERT INTO A BOX CULVERT OR CONCRETE PIPE SHALL BE PAID FOR AS A BRANCH CONNECTION OF THE APPROPRIATE SIZE, TYPE AND DESCRIPTION.
2. THE TABLE ON THIS SHEET INDICATES THE NUMBER AND LENGTHS OF ADDITIONAL REINFORCING STEEL BARS REQUIRED FOR BOX CULVERTS CONSTRUCTED. FOR A DOUBLE ROW OF REINFORCEMENT, DOUBLE THE NUMBER OF BARS SHOWN. THE ADDITIONAL REINFORCING STEEL SHALL BE INCLUDED IN THE COST FOR THIS TYPE OF BRANCH CONNECTION. THE QUANTITIES SHOWN IN THE TABLE ARE FOR THE MOST COMMON SIZES OF PIPE.
3. THE REINFORCEMENT OF THE INTERSECTED BOX OR PIPE SHALL BE CUT AS NECESSARY TO ACCOMMODATE THE STUBBED PIPE.
4. THE CONTRACTOR MAY INSERT THE INTERSECTING PIPE INTO THE FORM AT THE PROPER LOCATION IN LIEU OF FORMING BY BLOCKING OUT.

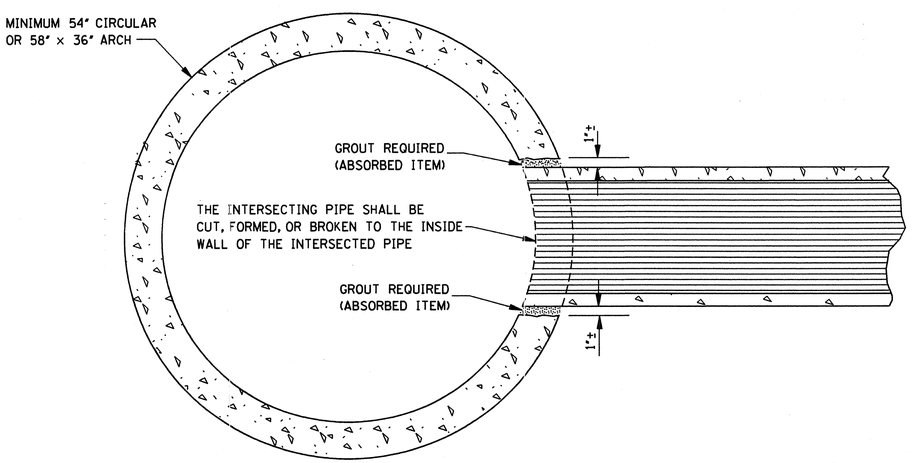

ELEVATION SHOWING PIPE CULVERT
STUBBED INTO CONCRETE PIPE CULVERT

NOTE: TYPICAL INSTALLATION FOR MEDIAN STUB TO CROSSING DRAIN WITH MINIMUM COVER.

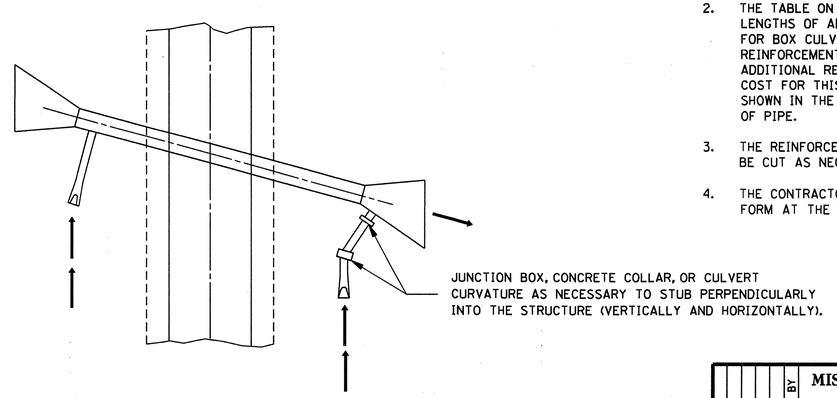

TYPICAL PLAN OF BRANCH CONNECTION
TO BOX CULVERT WING–WALL

DATE	REVISION	BY

MISSISSIPPI DEPARTMENT OF TRANSPORTATION
ROADWAY DESIGN DIVISION
STANDARD PLAN

BRANCH CONNECTIONS

DEPARTMENT OF TRANSPORTATION MISSISSIPPI ENGLISH

WORKING NUMBER
BC-1

ISSUE DATE: OCTOBER 1, 1998

SHEET NUMBER
305

STATE	PROJECT NO.
MISS.	

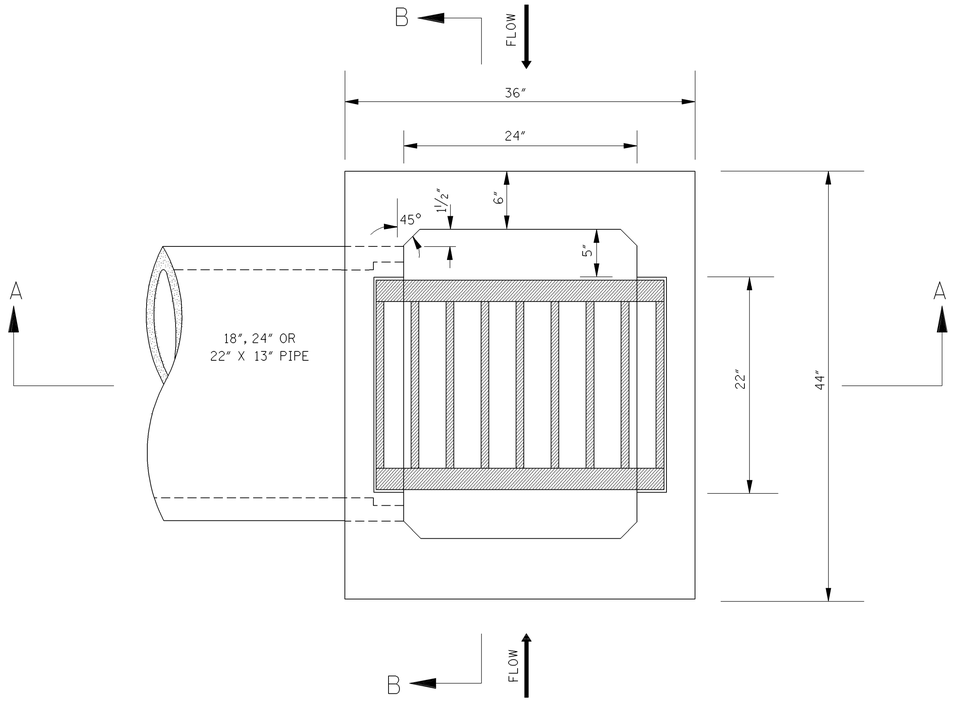

PLAN OF CONCRETE DIMENSIONS

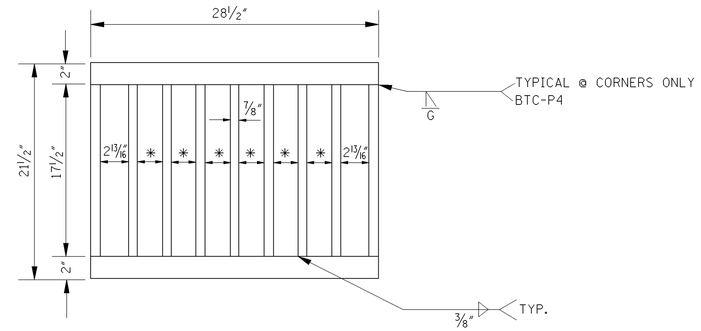

PLAN OF GRATE NO.1

✱ NOTE: TYPICAL SPACING 2½"

PIPE SIZE	MIN. DEPTH TO F.L.	QUANTITIES				T	PIPE OPENING DEDUCTION (yd^3)
		MIN. DEPTH INLET		EACH ADDED FOOT			
		CONC. (yd^3)	STEEL (lbs)	CONC. (yd^3)	STEEL (lbs)		
18"	2.500'	0.670	48	0.211	10	2½"	0.053
24"	3.042'	0.747	54	0.211	10	3"	0.091
22" X 13"	2.125'	0.591	46	0.211	10	2½"	0.053

NOTE: ONE (1) PIPE OPENING DEDUCTED FROM INLET.

BAR LIST FOR MINIMUM DEPTH INLET				
PIPE SIZE	BARS/SIZES			
	"A" #4	"B" #4	"C" #4	"D" #4
	NO. @ LGTH.	NO. @ LGTH.	NO. @ LGTH.	NO. @ LGTH.
18"	2 @ 1'-6"	6 @ 3'-2"	10 @ 2'-5"	10 @ 2'-6"
24"	2 @ 1'-6"	7 @ 3'-2"	10 @ 2'-5"	10 @ 3'-1"
22" X 13"	2 @ 1'-6"	6 @ 3'-2"	10 @ 2'-5"	10 @ 2'-4"

GENERAL NOTES:

1. QUANTITIES SHOWN WILL BE THE BASIS OF PAYMENT UNLESS AUTHORIZED MODIFICATIONS ARE MADE.

2. INLET:
   A. THE INLET ON THIS DRAWING IS SHOWN AS THE ENTRANCE TO A PIPE CULVERT BUT MAY ALSO BE USED ON A CROSSDRAIN.
   B. THE CONCRETE SHALL BE CLASS "B".
   C. THE REINFORCEMENT SHALL BE SPACED A MAXIMUM OF 12" ON CENTER BOTH WAYS WITH A MINIMUM CLEARANCE OF 1" TO THE INSIDE OF THE INLET WALLS.

3. GRATE:
   A. THE CONTRACTOR HAS THE OPTION TO PROVIDE GRATE NO. 1 OR GRATE NO. 2 AS SHOWN ON SHEET IG-1.

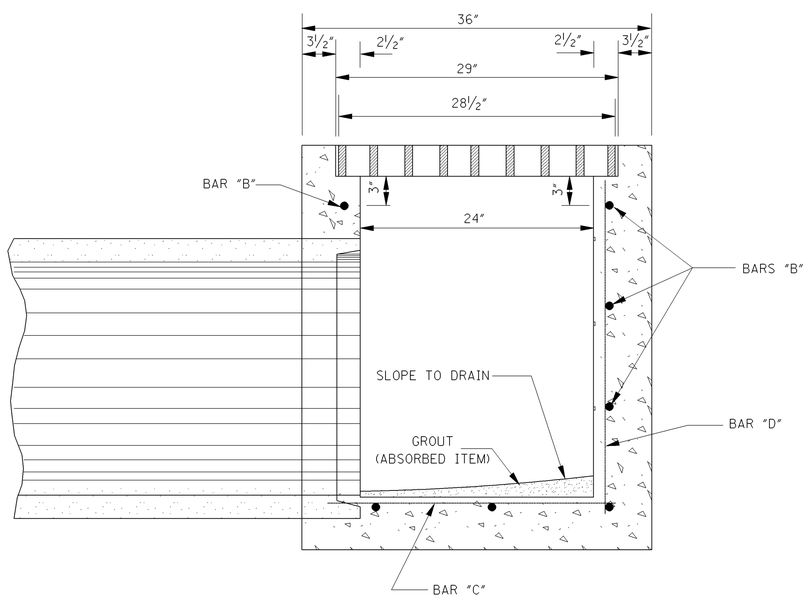

SECTION A–A

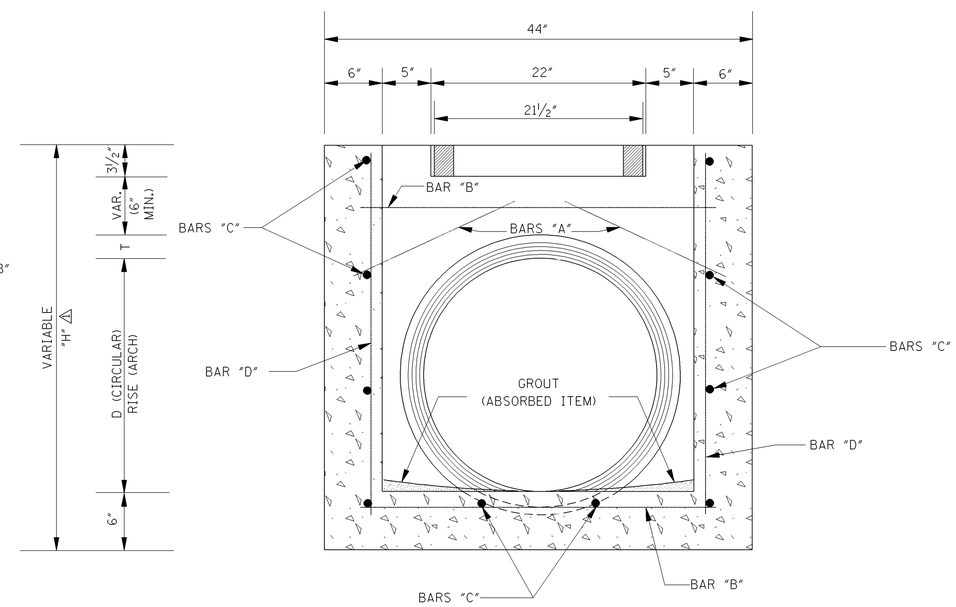

SECTION B–B

DATE	REVISION	BY
3-01-02	ADDED "H"	S.W.R.

MISSISSIPPI DEPARTMENT OF TRANSPORTATION
ROADWAY DESIGN DIVISION
STANDARD PLAN

TYPE I MEDIAN INLET
(24" PIPE AND UNDER)

ENGLISH

WORKING NUMBER
MI-1

SHEET NUMBER
306

ISSUE DATE: OCTOBER 1, 1998

STATE	PROJECT NO.
MISS.	

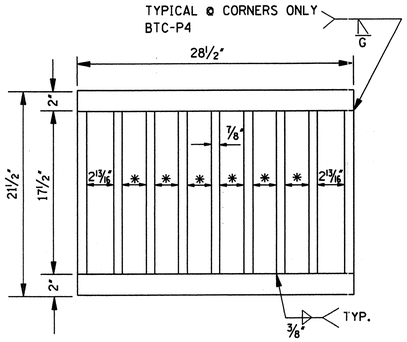

PLAN OF GRATE NO. 1

*NOTE: TYPICAL SPACING 2½"

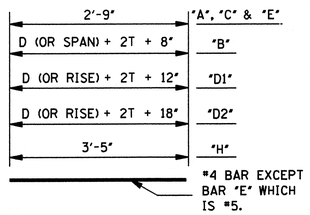

BARS "A", "C", "E", "B", "D1", "D2" & "H"

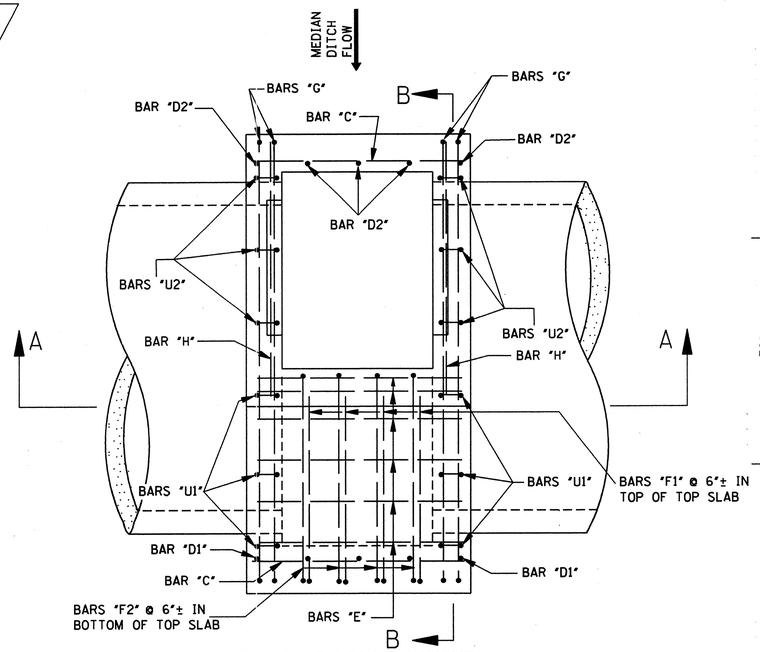

PLAN OF REBAR LAYOUT

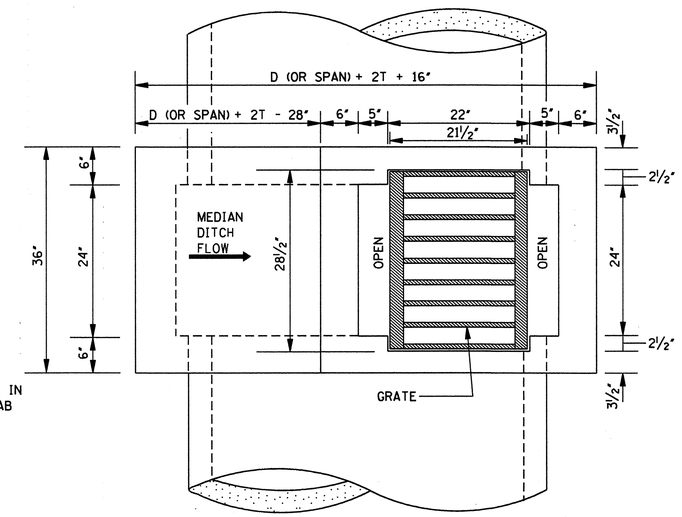

PLAN OF CONCRETE DIMENSIONS

BAR LIST												
PIPE SIZES	BARS/SIZES											
	"A"/#4	"B"/#4	"C"/#4	"D1"/#4	"D2"/#4	"E"/#5	"F1"/#5	"F2"/#5	"G"*/#5	"H"/#4	"U1"/#4	"U2"/#4
	LENGTHS											
	2'-9"	L_B	2'-9"	L_{D1}	L_{D2}	2'-9"	L_{F1}	L_{F2}	L_G	3'-5"	1'-10"	L_{U2}
	NUMBER OF BARS											
30"	4	4	15	4	4	4	4	4	8	2	2	6
36"	4	4	17	4	4	6	4	4	8	2	2	6
42"	4	4	18	4	4	7	4	4	8	2	4	6
48"	4	4	20	4	4	8	4	4	8	2	4	6
29" X 18"	4	4	12	4	4	4	4	4	8	2	2	6
36" X 23"	4	4	13	4	4	6	4	4	8	2	2	6
44" X 27"	4	4	16	4	4	7	4	4	8	2	4	6
51" X 31"	4	4	17	4	4	8	4	4	8	2	6	6

NOTES:
*1. USE #6 BARS FOR A 51" X 31" ARCH PIPE.
2. BAR SPACINGS FOR ADDITIONAL INLET HEIGHTS:
BARS "E" @ 6"±
BARS "H" @ 11"±
BARS "C" @ 11"±

INLET QUANTITIES							
PIPE SIZE	MIN. DEPTH TO F.L.	MIN. DEPTH INLET		EACH ADDED FOOT		T	PIPE OPENING DEDUCTION (yd^3)
		CONC. (yd^3)	STEEL (lbs)	CONC. (yd^3)	STEEL (lbs)		
30"	4.29'	1.138	161	0.210	25	3½"	0.138
36"	4.85'	1.341	185	0.210	25	4"	0.196
42"	5.38'	1.554	206	0.210	25	4½"	0.263
48"	5.92'	1.776	227	0.210	25	5"	0.340
29" X 18"	3.25'	0.935	146	0.210	25	3"	0.087
36" X 23"	3.71'	1.139	170	0.210	25	3½"	0.129
44" X 27"	4.08'	1.343	197	0.210	25	4"	0.185
51" X 31"	4.46'	1.543	259	0.210	25	4½"	0.245

NOTE: TWO PIPE OPENINGS HAVE BEEN DEDUCTED.

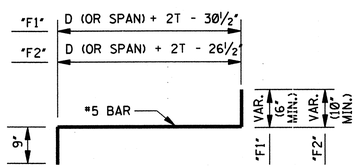

BARS "F1" & "F2"

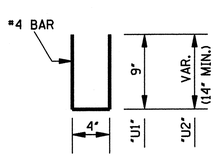

BARS "U1" & "U2"

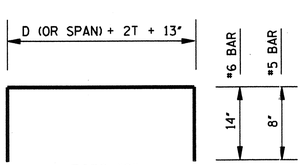

BARS "G"

NOTE: BARS "G" ARE #5 BARS FOR ALL CIRCULAR PIPES AND FOR PIPE ARCHES UP TO AND INCLUDING A 44" SPAN. FOR PIPE ARCHES WITH A SPAN LARGER THAN 44", USE #6 BARS FOR BARS "G".

BAR DETAILS

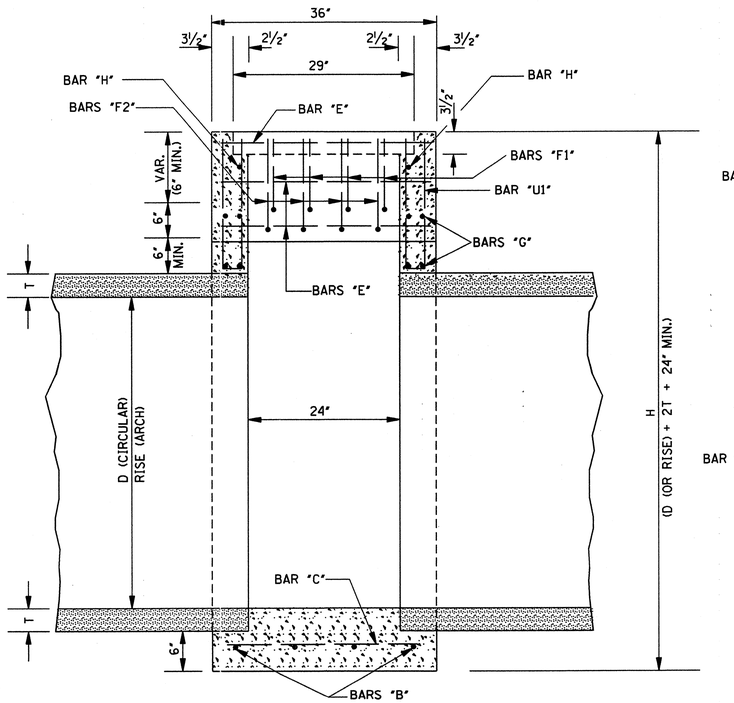

SECTION A–A

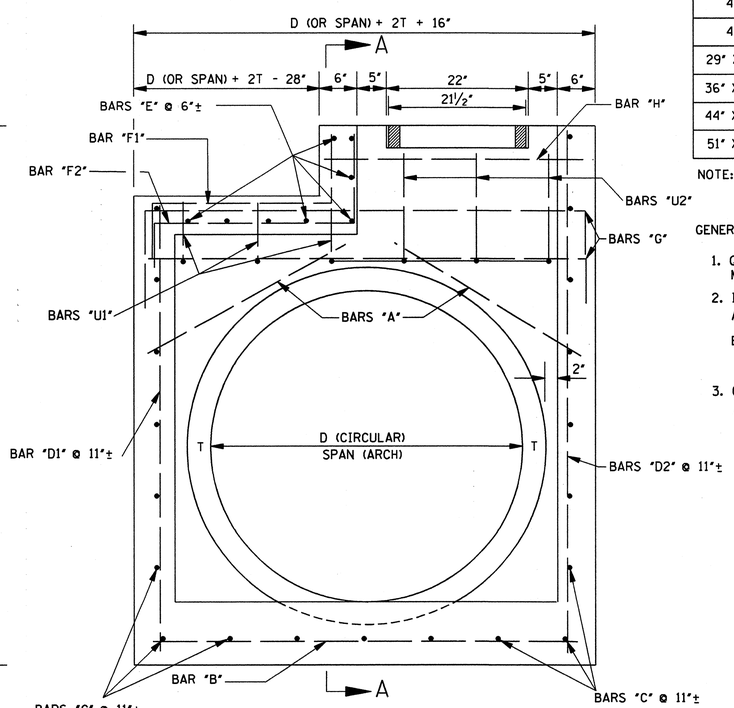

SECTION B–B

GENERAL NOTES:

1. QUANTITIES SHOWN WILL BE THE BASIS OF PAYMENT UNLESS AUTHORIZED MODIFICATIONS ARE MADE.
2. INLET:
   A. THE CONCRETE SHALL BE CLASS "B".
   B. THE REINFORCEMENT SHALL BE SPACED A MAXIMUM OF 12" ON CENTER BOTH WAYS WITH A MINIMUM CLEARANCE OF 1" TO THE INSIDE OF THE INLET WALLS. SEE CHART FOR BAR SIZES.
3. GRATE:
   A. THE CONTRACTOR HAS THE OPTION TO PROVIDE GRATE NO. 1 OR GRATE NO. 2 AS SHOWN ON SHEET IG-1.

DATE	REVISION	BY

MISSISSIPPI DEPARTMENT OF TRANSPORTATION
ROADWAY DESIGN DIVISION
STANDARD PLAN

TYPE I MEDIAN INLET
(29" - 51" PIPE)

ENGLISH

WORKING NUMBER MI-1A

ISSUE DATE: OCTOBER 1, 1998

SHEET NUMBER 307

STATE	PROJECT NO.
MISS.	

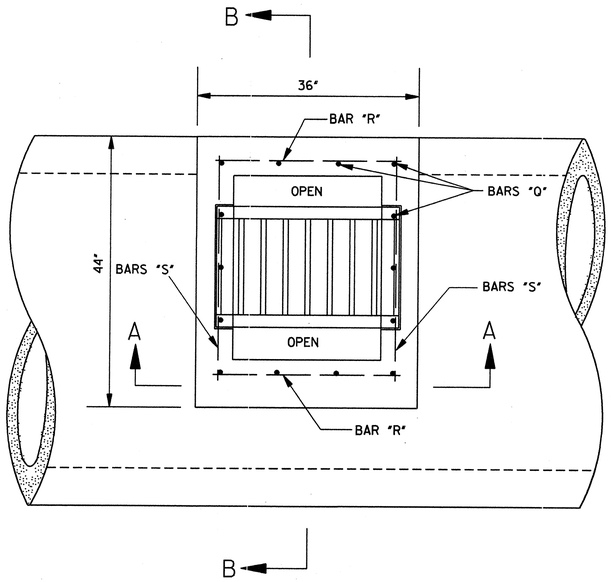

PLAN

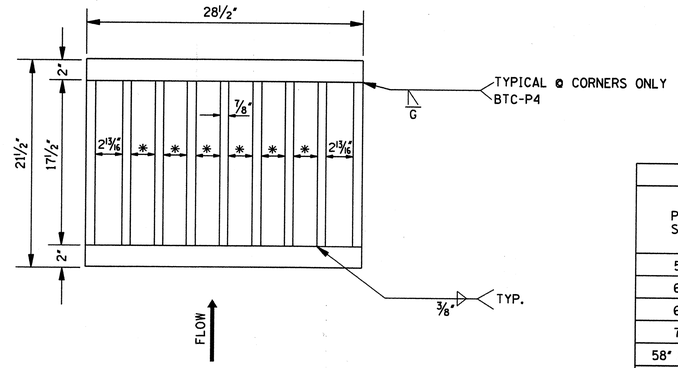

PLAN OF GRATE NO.1

* NOTE: TYPICAL SPACING 2½"

* QUANTITIES FOR MINIMUM HEIGHT TYPE I INLET									
PIPE SIZE	CONC. (yd 3)	STEEL (lbs)	BAR LIST						
			"Q1"	"Q2"	"Q3"	"Q4"	"Q5"	"R"	"S"**
			NO. @ LG.	NO. @ LG.	NO. @ LG.	NO. @ LG.	NO. @ LG.	NO. @ LG.	NO. @ LG.
54"	0.317	45	4 @ 1'-1"	2 @ 1'-1"	2 @ 1'-3"	2 @ 1'-7"	4 @ 3'-9"	9 @ 2'-6"	6 @ 3'-0"
60"	0.337	48	4 @ 1'-1"	2 @ 1'-1"	2 @ 1'-3"	2 @ 1'-8"	4 @ 4'-1"	10 @ 2'-6"	6 @ 3'-0"
66"	0.360	49	4 @ 1'-1"	2 @ 1'-2"	2 @ 1'-4"	2 @ 1'-10"	4 @ 4'-4"	10 @ 2'-6"	6 @ 3'-0"
72"	0.384	52	4 @ 1'-1"	2 @ 1'-2"	2 @ 1'-5"	2 @ 1'-11"	4 @ 4'-8"	11 @ 2'-6"	6 @ 3'-0"
58" X 36"	0.292	44	4 @ 1'-1"	2 @ 1'-1"	2 @ 1'-3"	2 @ 1'-7"	4 @ 3'-4"	9 @ 2'-6"	6 @ 3'-0"
65" X 40"	0.313	45	4 @ 1'-1"	2 @ 1'-2"	2 @ 1'-4"	2 @ 1'-9"	4 @ 3'-7"	9 @ 2'-6"	6 @ 3'-0"
73" X 45"	0.335	48	4 @ 1'-1"	2 @ 1'-2"	2 @ 1'-5"	2 @ 1'-11"	4 @ 3'-10"	10 @ 2'-6"	6 @ 3'-0"
88" X 54"	0.394	52	4 @ 1'-2"	2 @ 1'-4"	2 @ 1'-8"	2 @ 2'-2"	4 @ 4'-5"	11 @ 2'-6"	6 @ 3'-0"
EACH ADD. FOOT OF HEIGHT	0.210	24	--	--	--	--	--	--	--

NOTES:

*1. 8" MINIMUM HEIGHT INLET.

**2. 2 BARS MAY BE FIELD CUT TO PROVIDE VARIABLE LENGTH BARS "S" AS SHOWN.

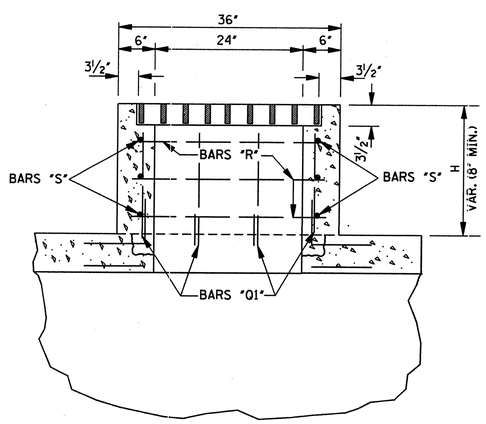

SECTION A–A

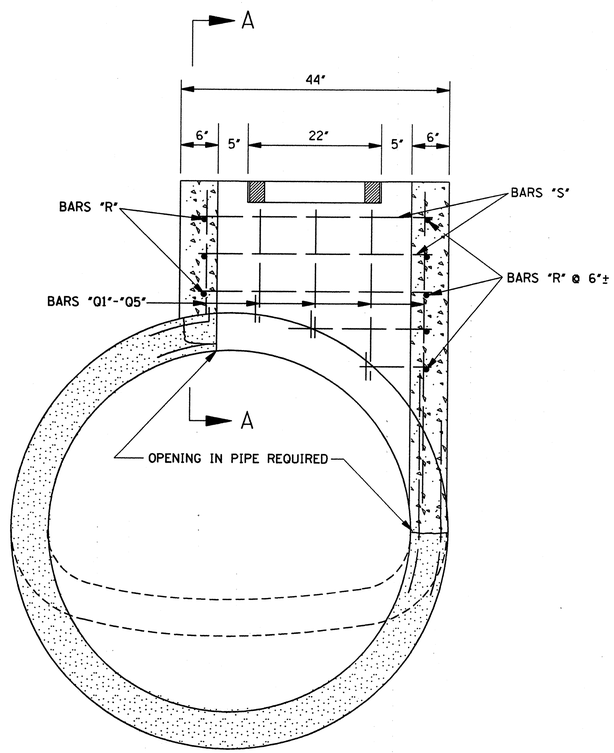

SECTION B–B

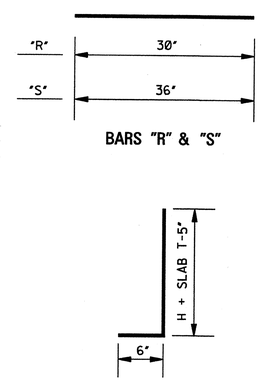

BARS "R" & "S"

BARS "Q1" – "Q5"

NOTE: 14 BARS "Q" REQUIRED.

BAR DETAILS

GENERAL NOTES:

1. QUANTITIES SHOWN WILL BE THE BASIS OF PAYMENT UNLESS AUTHORIZED MODIFICATIONS ARE MADE
2. INLET:
   A. THE CONCRETE SHALL BE CLASS "B".
   B. THE REINFORCEMENT SHALL BE #4 BARS SPACED A MAXIMUM OF 12" ON CENTER BOTH WAYS WITH A MINIMUM CLEARANCE OF 1" TO THE INSIDE OF THE INLET WALLS.
3. GRATE:
   A. THE CONTRACTOR HAS THE OPTION TO PROVIDE GRATE NO. 1 OR GRATE NO. 2 AS SHOWN ON SHEET IG-1.

DATE	REVISION	BY

MISSISSIPPI DEPARTMENT OF TRANSPORTATION
ROADWAY DESIGN DIVISION
STANDARD PLAN

TYPE I MEDIAN INLET
(OVER 51" PIPE)

ENGLISH

WORKING NUMBER MI-1B

ISSUE DATE: OCTOBER 1, 1998

SHEET NUMBER 308

STATE	PROJECT NO.
MISS.	

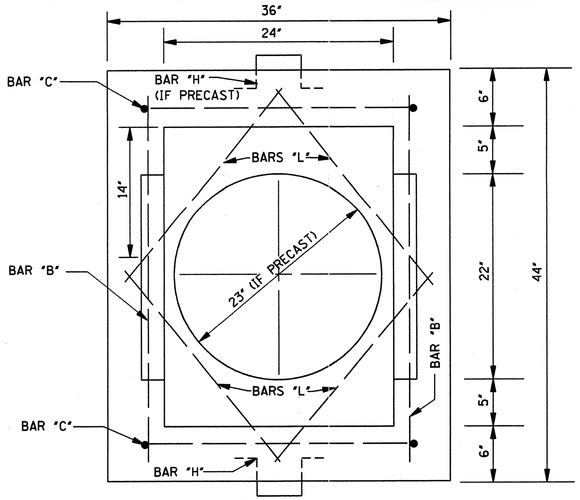

PLAN OF INLET

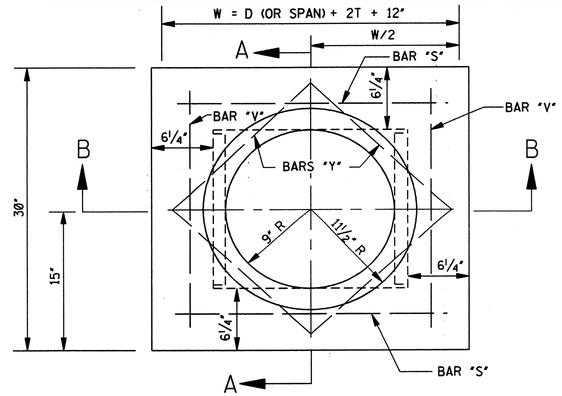

PLAN OF PRECAST COVER

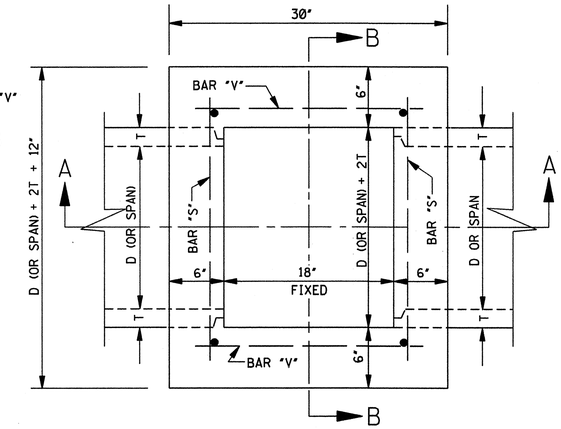

PLAN OF JUNCTION BOX

QUANTITIES FOR JUNCTION BOX & INLET				
PIPE SIZE	T	CONC. (yd^3)	STEEL (lbs)	PIPE OPENING DEDUCTION (yd^3)
18"	2½"	0.914	64	0.053
24"	3"	1.065	69	0.091
30"	3½"	1.225	74	0.138
36"	4"	1.393	79	0.196
42"	4½"	1.570	84	0.263
48"	5"	1.754	89	0.340
22" X 13"	2½"	0.923	67	0.053
29" X 18"	3"	1.068	70	0.087
36" X 23"	3½"	1.244	75	0.129
44" X 27"	4"	1.408	81	0.185
51" X 31"	4½"	1.600	86	0.245

NOTES:

1. 2 PIPE OPENINGS HAVE BEEN DEDUCTED FROM JUNCTION BOX.
2. 0.378 yd^3 CLASS "B" CONCRETE AND 24 lbs REINFORCING STEEL INCLUDED FOR INLET.

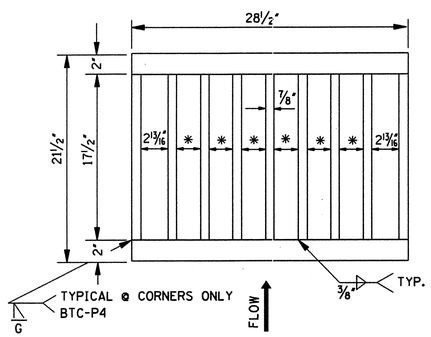

PLAN OF GRATE NO. 1

* NOTE: TYPICAL SPACING 2½".

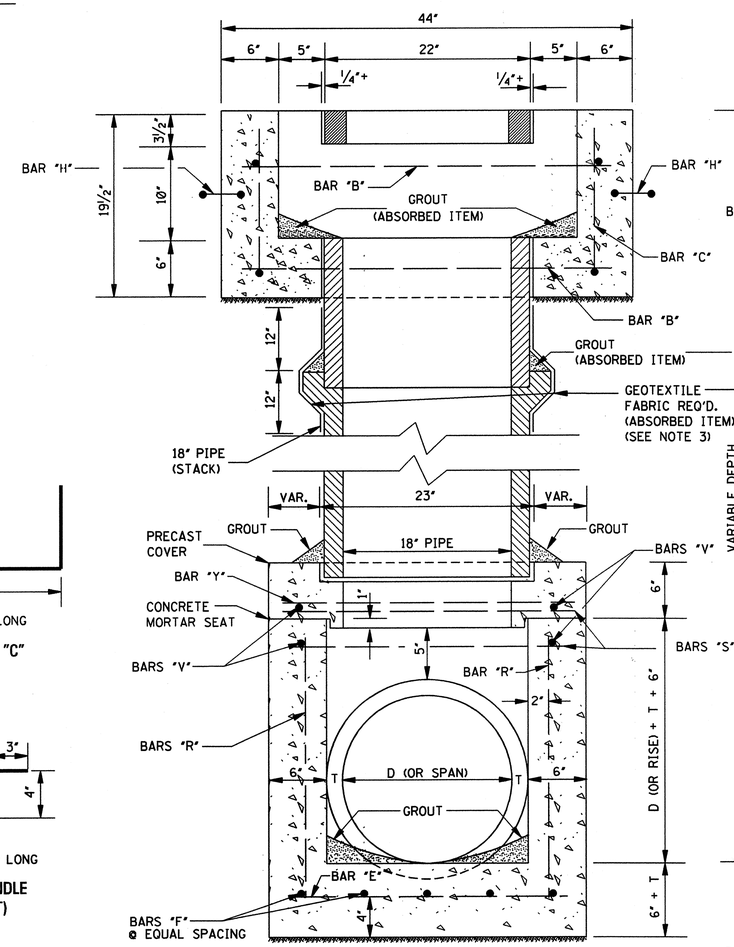

SECTION B–B

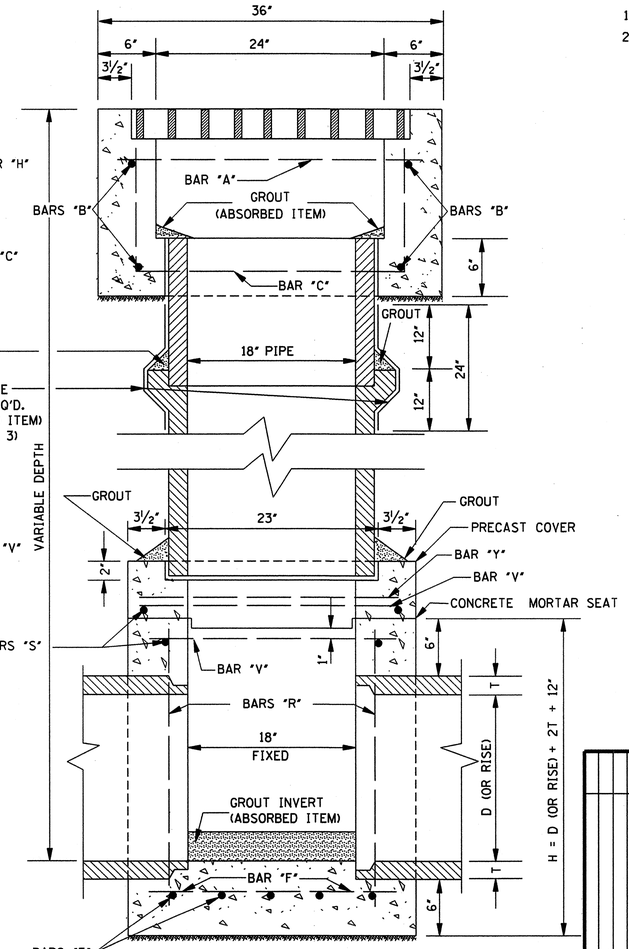

SECTION A–A

GENERAL NOTES:

1. QUANTITIES SHOWN WILL BE THE BASIS OF PAYMENT UNLESS AUTHORIZED MODIFICATIONS ARE MADE.
2. ANY STACK PIPE WHICH MUST BE CUT OFF WILL BE PAID FOR AT PIPE LENGTH AS THOUGH INSTALLED.
3. EACH STACKED PIPE JOINT SHALL BE WRAPPED WITH GEOTEXTILE FABRIC, 24" WIDE, AASHTO M 288 EOS= 100+ THE FABRIC SHALL OVERLAP A MINIMUM OF 12" AT THE WRAP AND SHALL BE SECURED WITH STRING OR WIRE FOR BACKFILLING. THE COST FOR THE MATERIALS AND LABOR SHALL BE ABSORBED.
4. THE CONTRACTOR HAS THE OPTION TO PROVIDE GRATE NO. 1 OR GRATE NO. 2 AS SHOWN ON SHEET IG-1.
5. CONCRETE SHALL BE CLASS "B" CONCRETE AND REINFORCING STEEL SHALL BE DEFORMED BARS.

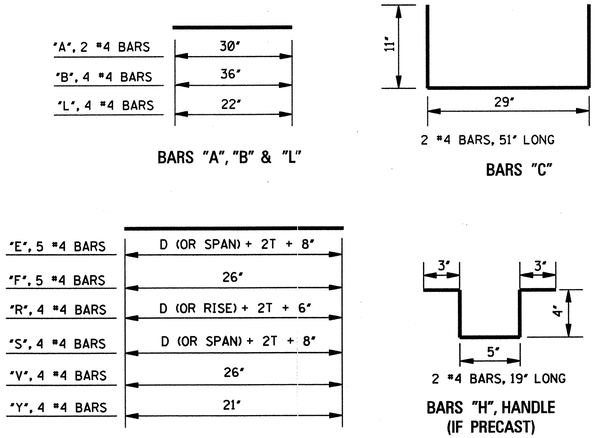

BAR DETAILS

DATE	REVISION	BY

MISSISSIPPI DEPARTMENT OF TRANSPORTATION
ROADWAY DESIGN DIVISION
STANDARD PLAN

TYPE II MEDIAN INLET
(51" PIPE AND UNDER)

ENGLISH

WORKING NUMBER MI-2

ISSUE DATE: OCTOBER 1, 1998

SHEET NUMBER 309

STATE	PROJECT NO.
MISS.	

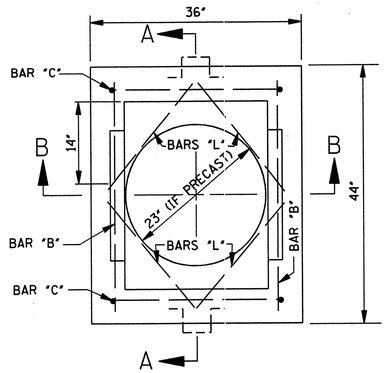

PLAN OF INLET

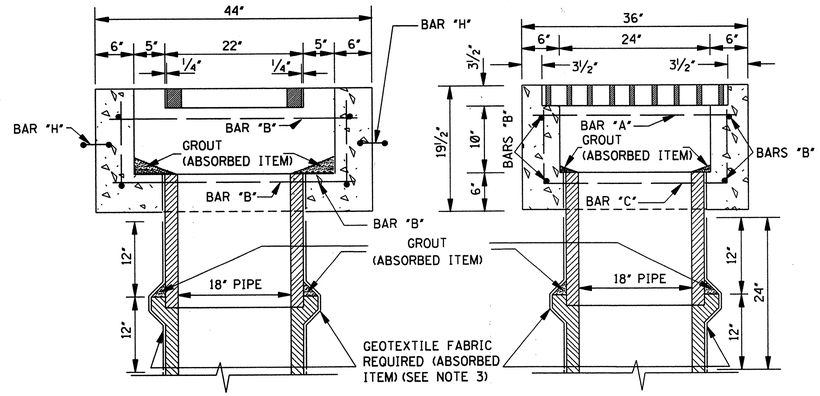

SECTION B–B

TYPE II INLET QUANTITIES								
PIPE SIZE	CONC. (yd^3)	STEEL (lbs)	PARTIAL BAR LIST					
			"Q1"	"Q2"	"Q3"	"Q4"	"R"	"S"
			NO. @ LGTH	NO. @ LGTH.	NO. @ LGTH.	NO. @ LGTH.	NO. @ LGTH.	NO. @ LGTH.
54"	0.838	72	4 @ 0'-7"	2 @ 0'-8"	2 @ 1'-1"	4 @ 3'-3"	9 @ 2'-6"	6 @ 2'-4"
60"	0.862	75	4 @ 0'-7"	2 @ 0'-9"	2 @ 1'-2"	4 @ 3'-7"	10 @ 2'-6"	6 @ 2'-4"
66"	0.887	76	4 @ 0'-7"	2 @ 0'-10"	2 @ 1'-4"	4 @ 3'-10"	10 @ 2'-6"	6 @ 2'-4"
72"	0.913	79	4 @ 0'-8"	2 @ 0'-11"	2 @ 1'-5"	4 @ 4'-2"	11 @ 2'-6"	6 @ 2'-4"
58" X 36"	0.816	70	4 @ 0'-7"	2 @ 0'-9"	2 @ 1'-2"	4 @ 2'-10"	8 @ 2'-6"	6 @ 2'-4"
65" X 40"	0.839	72	4 @ 0'-7"	2 @ 0'-10"	2 @ 1'-3"	4 @ 3'-0"	9 @ 2'-6"	6 @ 2'-4"
73" X 45"	0.864	73	4 @ 0'-8"	2 @ 0'-11"	2 @ 1'-5"	4 @ 3'-4"	9 @ 2'-6"	6 @ 2'-4"
88" X 54"	0.925	77	4 @ 0'-9"	2 @ 1'-2"	2 @ 1'-8"	4 @ 3'-10"	10 @ 2'-6"	6 @ 2'-4"

NOTES:

1. 0.378 yd^3 CLASS "B" CONCRETE AND 24 lbs. REINFORCING STEEL INCLUDED FOR INLET.
2. ALL REINFORCING BARS ARE #4 DEFORMED BARS.

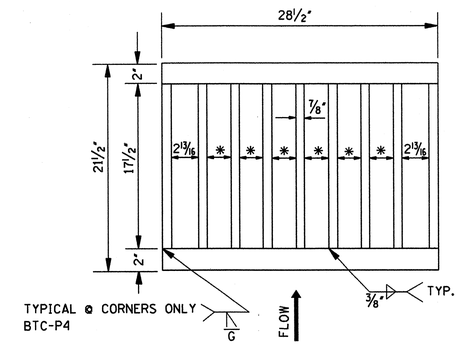

PLAN OF GRATE NO. 1

*NOTE: TYPICAL SPACING 2 1/2".

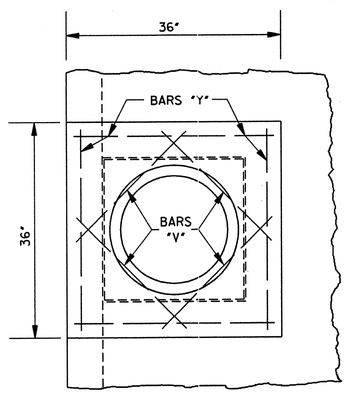

PLAN OF INLET BASE

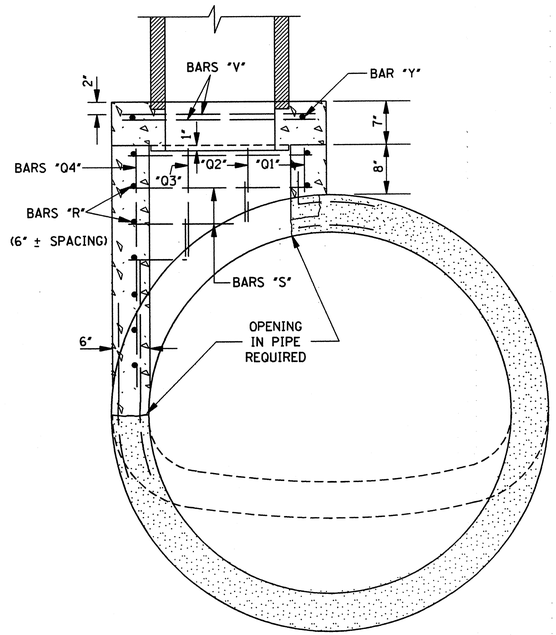

SECTION A–A

"A", 2 #4 BARS	30"
"B", 4 #4 BARS	36"
"L", 4 #4 BARS	22"
"V", 4 #4 BARS	22"
"Y", 4 #4 BARS	28"

BARS "A", "B", "L", "V" & "Y"

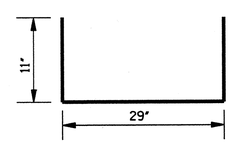

2 #4 BARS, 51" LONG

BARS "C"

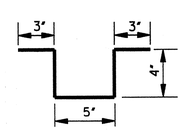

2 #4 BARS, 19" LONG

BARS "H", HANDLE
(IF PRECAST)

BAR DETAILS

GENERAL NOTES:

1. QUANTITIES SHOWN WILL BE THE BASIS OF PAYMENT UNLESS AUTHORIZED MODIFICATIONS ARE MADE.
2. ANY STACK PIPE WHICH MUST BE CUT OFF WILL BE PAID FOR AT PIPE LENGTH AS THOUGH INSTALLED.
3. EACH STACKED PIPE JOINT SHALL BE WRAPPED WITH GEOTEXTILE FABRIC, 24" WIDE, AASHTO M 288 EOS= 100+. THE FABRIC SHALL OVERLAP A MINIMUM OF 12" AT THE WRAP AND SHALL BE SECURED WITH STRING OR WIRE FOR BACKFILLING. THE COST FOR THE MATERIALS AND LABOR SHALL BE ABSORBED.
4. THE CONTRACTOR HAS THE OPTION TO PROVIDE GRATE NO. 1 OR GRATE NO. 2 AS SHOWN ON SHEET IG-1.
5. CONCRETE SHALL BE CLASS "B" CONCRETE AND REINFORCING STEEL SHALL BE DEFORMED BARS.

DATE	REVISION	BY

MISSISSIPPI DEPARTMENT OF TRANSPORTATION
ROADWAY DESIGN DIVISION
STANDARD PLAN

TYPE II MEDIAN INLET
(OVER 51" PIPE)

DEPARTMENT OF TRANSPORTATION ENGLISH MISSISSIPPI

WORKING NUMBER
MI-2A

ISSUE DATE: OCTOBER 1, 1998

SHEET NUMBER
310

STATE	PROJECT NO.
MISS.	

TYPE I INLET

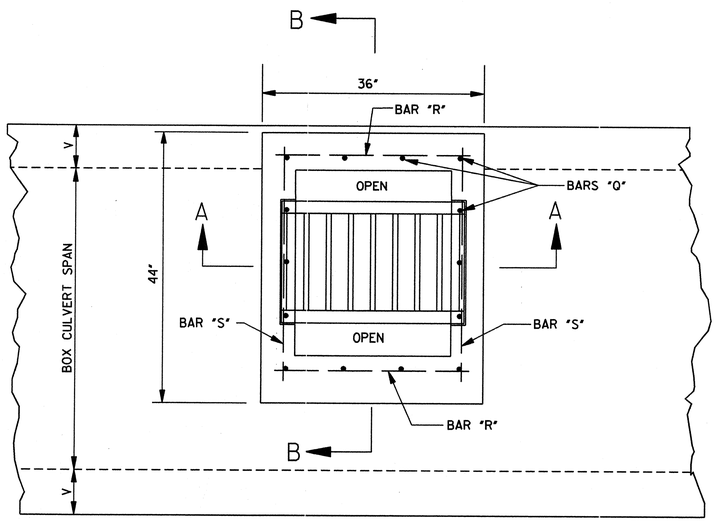

PLAN

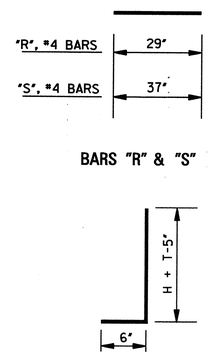

BARS "R" & "S"

14 #4 BARS @ (H+T+1") LONG

BARS "Q"

BAR DETAILS

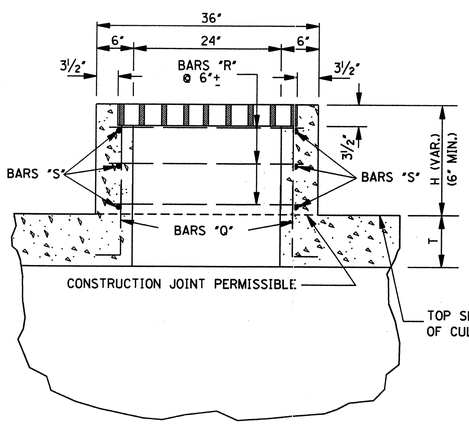

SECTION A–A

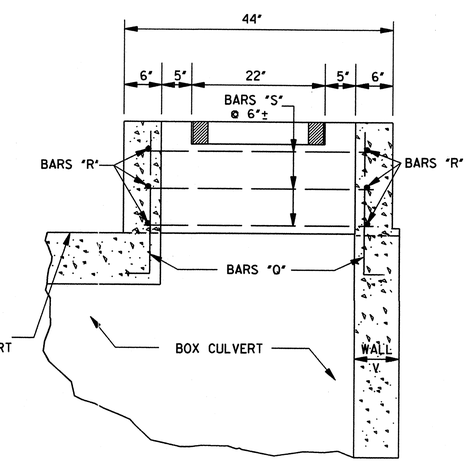

SECTION B–B

TYPE II INLET

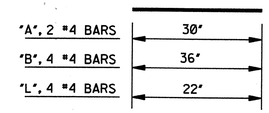

BARS "A", "B" & "L"

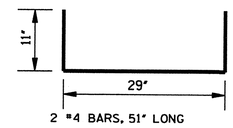

2 #4 BARS, 51" LONG

BARS "C"

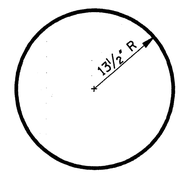

1 #4 BAR, 86" LONG

BAR "K"

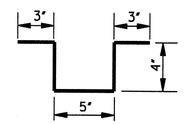

2 #4 BARS, 19" LONG

BARS "H" (HANDLE)
(IF PRECAST)

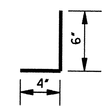

4 #4 BARS, 10" LONG

BARS "F"

BAR DETAILS

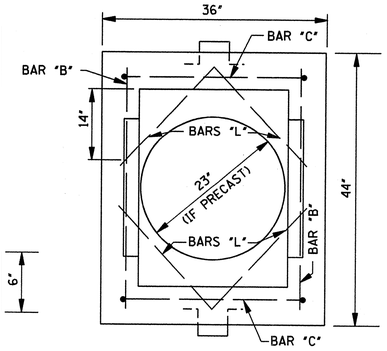

PLAN OF INLET

INLET QUANTITIES				
INLET TYPE	CONC. (yd^3)	STEEL (lbs)	EACH ADDED FOOT CONC. (yd^3)	EACH ADDED FOOT STEEL (lbs)
I	0.097*	18 *	0.210	24
II	0.448	30		

*NOTE: 6" MINIMUM HEIGHT INLET WITH AN ASSUMED BOX CULVERT THICKNESS (T) OF 6".

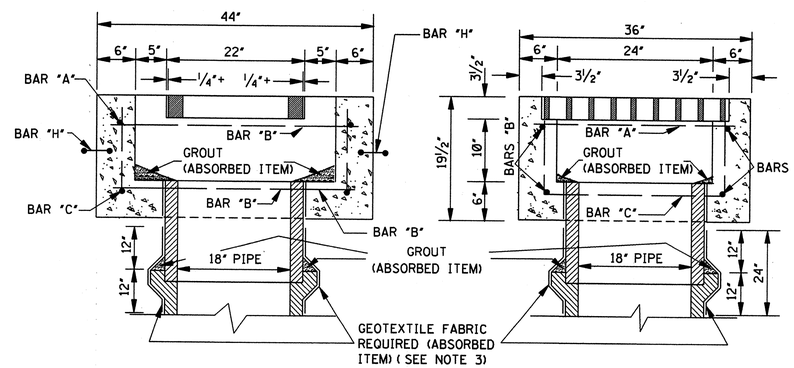

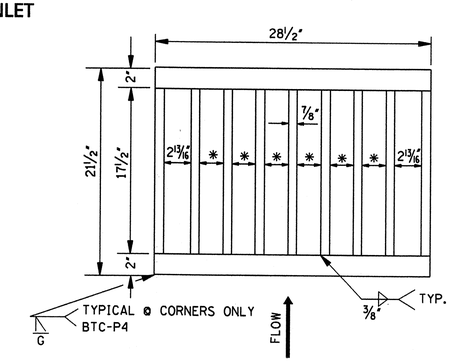

PLAN OF GRATE NO.1

* NOTE: TYPCIAL SPACING 2½".

GENERAL NOTES:

1. QUANTITIES SHOWN WILL BE THE BASIS OF PAYMENT UNLESS AUTHORIZED MODIFICATIONS ARE MADE.
2. ANY STACK PIPE WHICH MUST BE CUT OFF WILL BE PAID FOR AT PIPE LENGTH AS THOUGH INSTALLED.
3. EACH STACKED PIPE JOINT SHALL BE WRAPPED WITH GEOTEXTILE FABRIC 24" WIDE, AASHTO M 288 EOS = 100+. THE FABRIC SHALL OVERLAP A MINIMUM OF 12" AT THE WRAP AND SHALL BE SECURED WITH STRING OR WIRE FOR BACKFILLING. THE COST FOR THE MATERIALS AND LABOR SHALL BE ABSORBED.
4. THE CONTRACTOR HAS THE OPTION TO PROVIDE GRATE NO. 1 OR GRATE NO. 2 AS SHOWN ON SHEET IG-1.
5. CONCRETE SHALL BE CLASS "B" CONCRETE AND REINFORCING STEEL SHALL BE DEFORMED BARS.

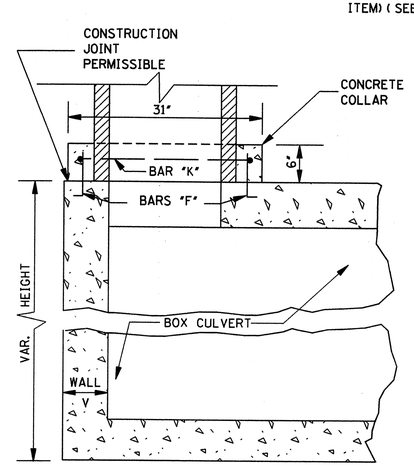

SECTION C–C

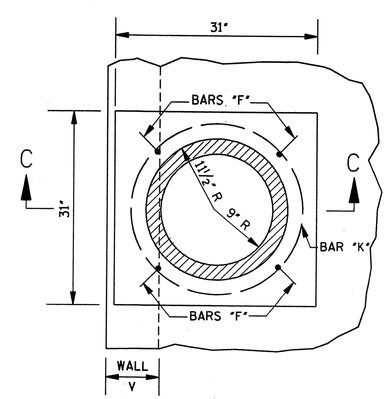

PLAN OF CONCRETE COLLAR

DATE	REVISION	BY

MISSISSIPPI DEPARTMENT OF TRANSPORTATION
ROADWAY DESIGN DIVISION
STANDARD PLAN

MEDIAN INLETS FOR BOX CULVERTS (TYPE I AND II)

ENGLISH

WORKING NUMBER MI-3

ISSUE DATE: OCTOBER 1, 1998

SHEET NUMBER 311

STATE	PROJECT NO.
MISS.	

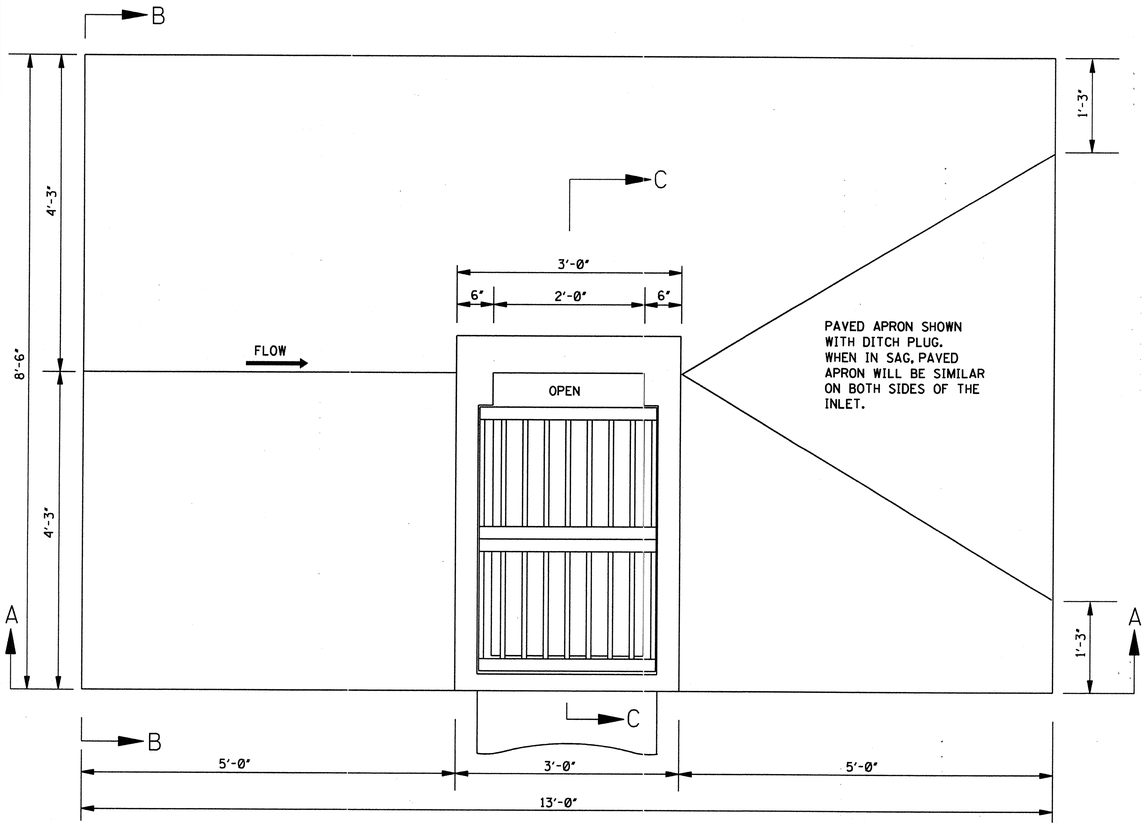

PLAN

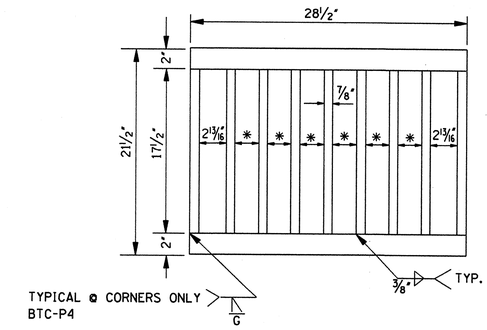

PLAN OF GRATE NO. 1

*NOTE: TYPICAL SPACING 2½".

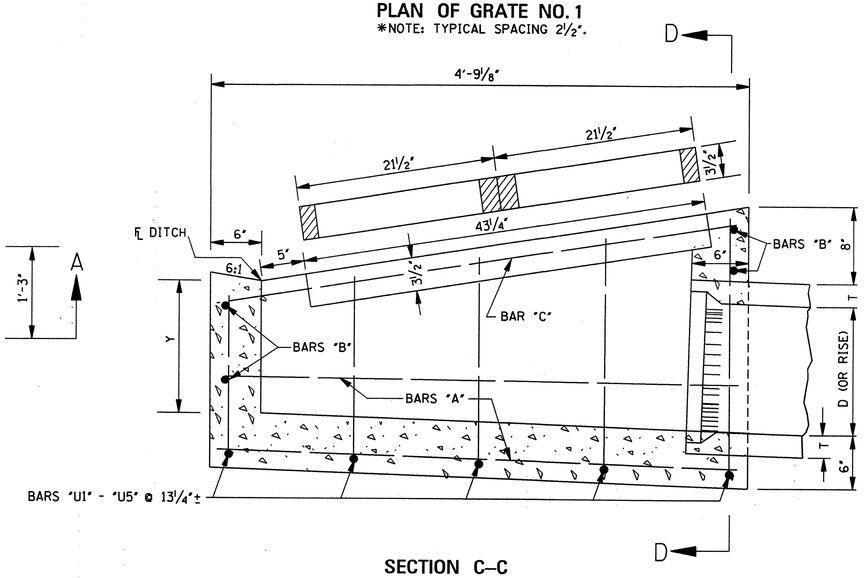

SECTION C–C

QUANTITIES				
PIPE SIZE	Y	T	CONC. (yd³)	STEEL (lbs)
18"	18½"	2½"	0.670	52
24"	24½"	3"	0.759	55
22" X 13"	14½"	2½"	0.582	50

5 #4 BARS, (2Z + 32") LONG

BARS "U"
BAR DETAILS

BAR LIST						
BAR / SIZE	PIPE SIZE 18" Z	18" NO. @ LG.	24" Z	24" NO. @ LG.	22" X 13" Z	22" X 13" NO. @ LG.
"U1" #4	21"	1 @ 6'-2"	27"	1 @ 7'-2"	17"	1 @ 5'-6"
"U2" #4	23½"	1 @ 6'-7"	29½"	1 @ 7'-7"	19½"	1 @ 5'-11"
"U3" #4	26"	1 @ 7'-0"	32"	1 @ 8'-0"	22"	1 @ 6'-4"
"U4" #4	28½"	1 @ 7'-5"	34½"	1 @ 8'-5"	24½"	1 @ 6'-9"
"U5" #4	31"	1 @ 7'-10"	37"	1 @ 8'-10"	27"	1 @ 7'-2"
"A" #4	--	5 @ 4'-6"	--	5 @ 4'-6"	--	5 @ 4'-6"
"B" #4	--	4 @ 2'-9"	--	4 @ 2'-9"	--	4 @ 2'-9"
"C" #4	--	2 @ 4'-7"	--	2 @ 4'-7"	--	2 @ 4'-7"

NOTE: TWO (2) GRATES REQUIRED.

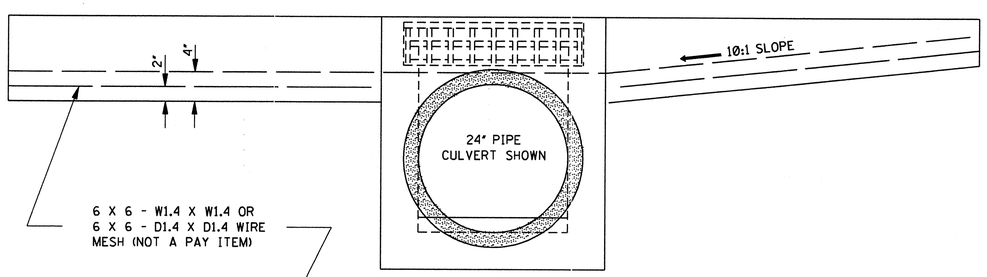

SECTION A–A

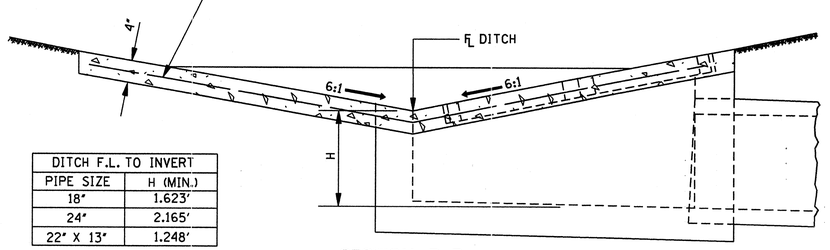

DITCH F.L. TO INVERT	
PIPE SIZE	H (MIN.)
18"	1.623'
24"	2.165'
22" X 13"	1.248'

SECTION B–B

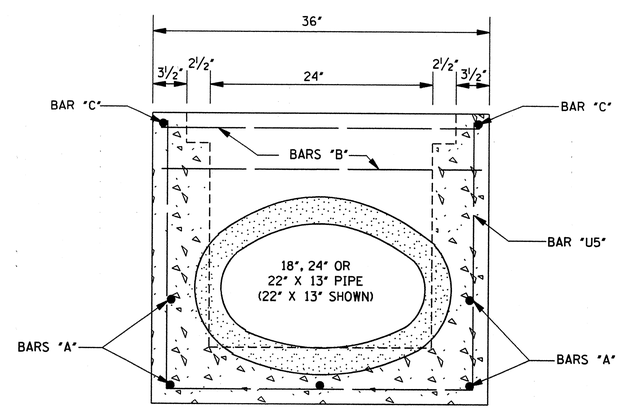

SECTION D–D

GENERAL NOTES:

1. QUANTITIES SHOWN WILL BE THE BASIS OF PAYMENT UNLESS AUTHORIZED MODIFICATIONS ARE MADE.
2. THE CONCRETE SHALL BE CLASS "B" CONCRETE AND REINFORCING STEEL SHALL BE DEFORMED BARS.
3. THE CONTRACTOR HAS THE OPTION TO PROVIDE GRATE NO. 1 OR GRATE NO. 2 AS SHOWN ON SHEET IG-1.
4. 1.203 yd³ CLASS "C" CONCRETE REQUIRED FOR PAVED APRON (PAID FOR UNDER THE APPROPRIATE PAY ITEM FOR CONCRETE PAVED DITCH).

DATE	REVISION	BY

MISSISSIPPI DEPARTMENT OF TRANSPORTATION
ROADWAY DESIGN DIVISION
STANDARD PLAN

MEDIAN INLET
(FLUSH WITH FORESLOPE)

ENGLISH

WORKING NUMBER
MI-4

ISSUE DATE: OCTOBER 1, 1998

SHEET NUMBER
312

STATE	PROJECT NO.
MISS.	

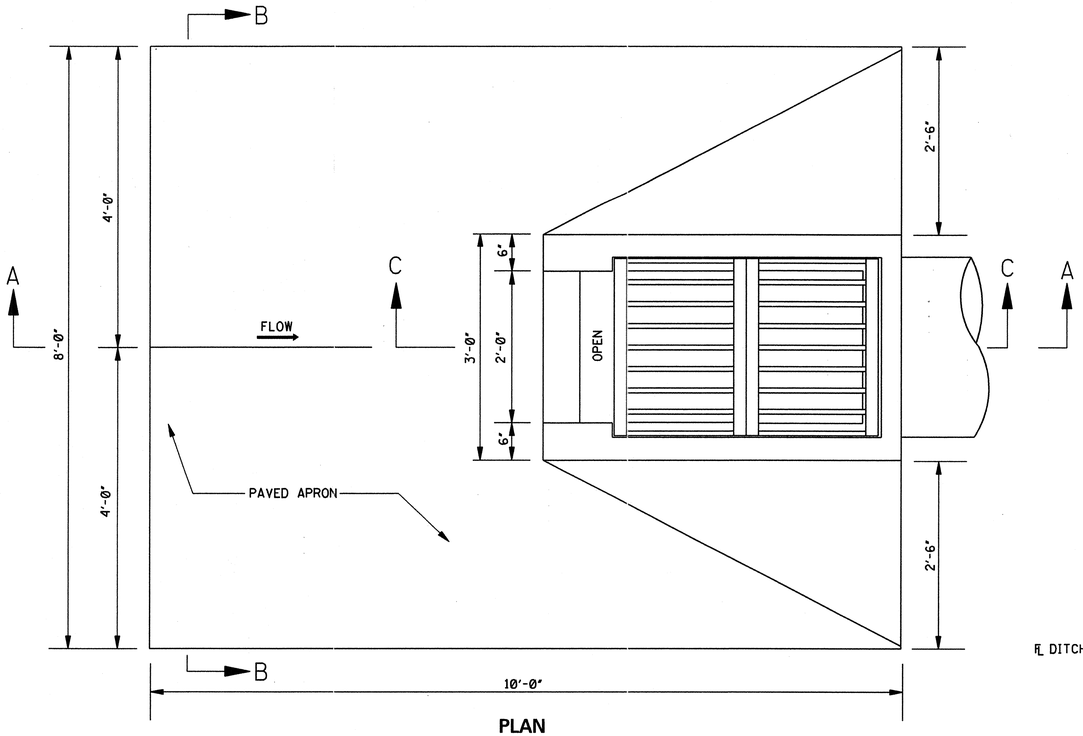

PLAN

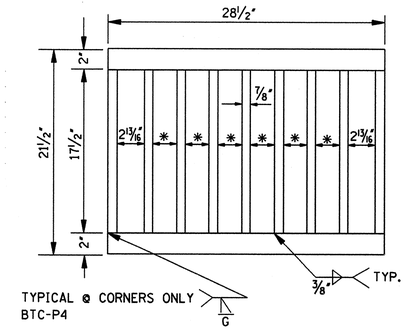

PLAN OF GRATE NO. 1

*NOTE: TYPICAL SPACING 2½".

QUANTITIES				
PIPE SIZE	Y	T	CONC. (yd^3)	STEEL (lbs)
18"	17½"	2½"	0.678	50
24"	24"	3"	0.722	53
22" X 13"	13½"	2½"	0.549	48

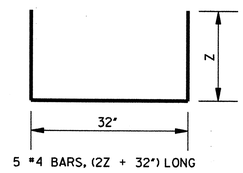

5 #4 BARS, (2Z + 32") LONG

BARS "U"

BAR DETAILS

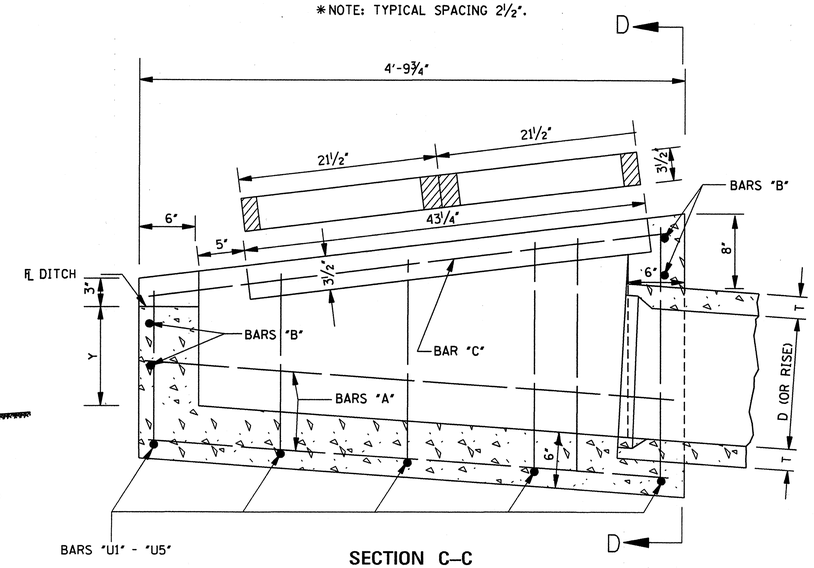

SECTION C–C

BAR LIST						
BAR	PIPE SIZE					
	18"		24"		22" X 13"	
SIZE	Z	NO. @ LG.	Z	NO. @ LG.	Z	NO. @ LG.
"U1" #4	22½"	1 @ 6'-5"	29"	1 @ 7'-6"	18½"	1 @ 5'-9"
"U2" #4	24"	1 @ 6'-8"	31"	1 @ 7'-10"	20½"	1 @ 6'-1"
"U3" #4	26½"	1 @ 7'-1"	32½"	1 @ 8'-1"	22½"	1 @ 6'-5"
"U4" #4	28"	1 @ 7'-4"	34½"	1 @ 8'-5"	24"	1 @ 6'-8"
"U5" #4	30"	1 @ 7'-8"	36½"	1 @ 8'-9"	26"	1 @ 7'-0"
"A" #4	--	5 @ 4'-8"	--	5 @ 4'-8"	--	5 @ 4'-8"
"B" #4	--	4 @ 2'-9"	--	4 @ 2'-9"	--	4 @ 2'-9"
"C" #4	--	2 @ 4'-8"	--	2 @ 4'-8"	--	2 @ 4'-8"

NOTE: TWO (2) GRATES REQUIRED.

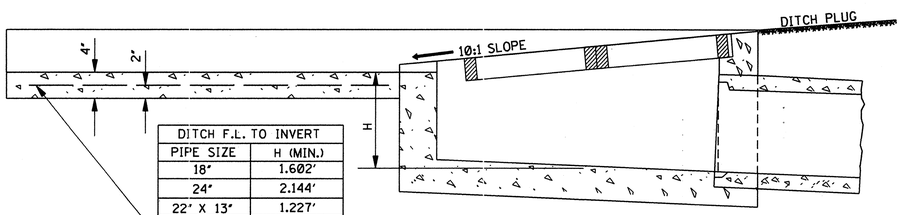

DITCH F.L. TO INVERT	
PIPE SIZE	H (MIN.)
18"	1.602'
24"	2.144'
22" X 13"	1.227'

SECTION A–A

6 X 6 - W1.4 X W1.4 OR
6 X 6 - D1.4 X D1.4 WIRE
MESH (NOT A PAY ITEM)

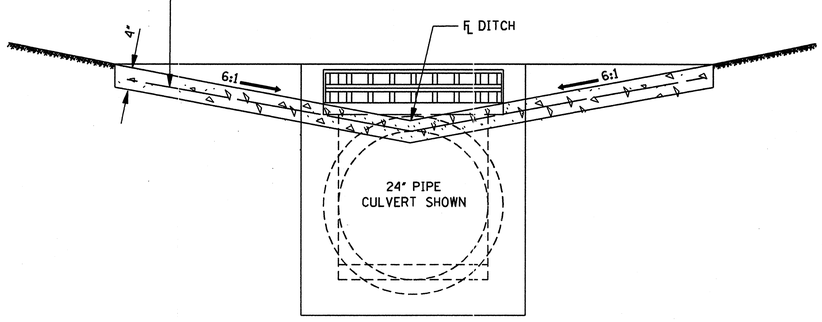

SECTION B–B

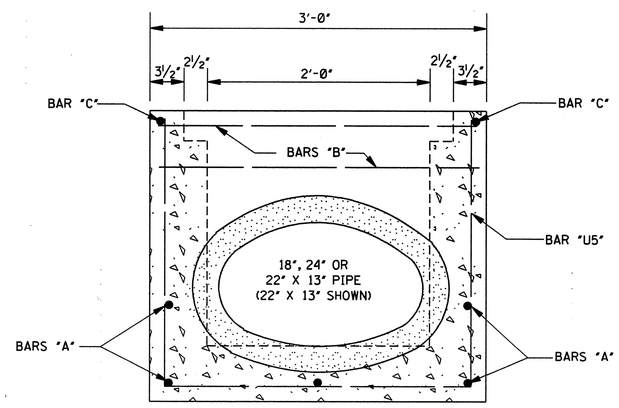

SECTION D–D

GENERAL NOTES:

1. QUANTITIES SHOWN WILL BE THE BASIS OF PAYMENT UNLESS AUTHORIZED MODIFICATIONS ARE MADE.
2. THE CONCRETE SHALL BE CLASS "B" CONCRETE AND REINFORCING STEEL SHALL BE DEFORMED BARS.
3. THE CONTRACTOR HAS THE OPTION TO PROVIDE GRATE NO. 1 OR GRATE NO. 2 AS SHOWN ON SHEET IG-1.
4. 0.819 yd^3 CLASS "C" CONCRETE REQUIRED FOR PAVED APRON (PAID FOR UNDER THE APPROPRIATE PAY ITEM FOR CONCRETE PAVED DITCH).

DATE	REVISION	BY

MISSISSIPPI DEPARTMENT OF TRANSPORTATION
ROADWAY DESIGN DIVISION
STANDARD PLAN

MEDIAN INLET
(FLUSH WITH DITCH PLUG)

ENGLISH

WORKING NUMBER
MI-4A

ISSUE DATE: OCTOBER 1, 1998

SHEET NUMBER
313

STATE	PROJECT NO.
MISS.	

GRATE NO. 1

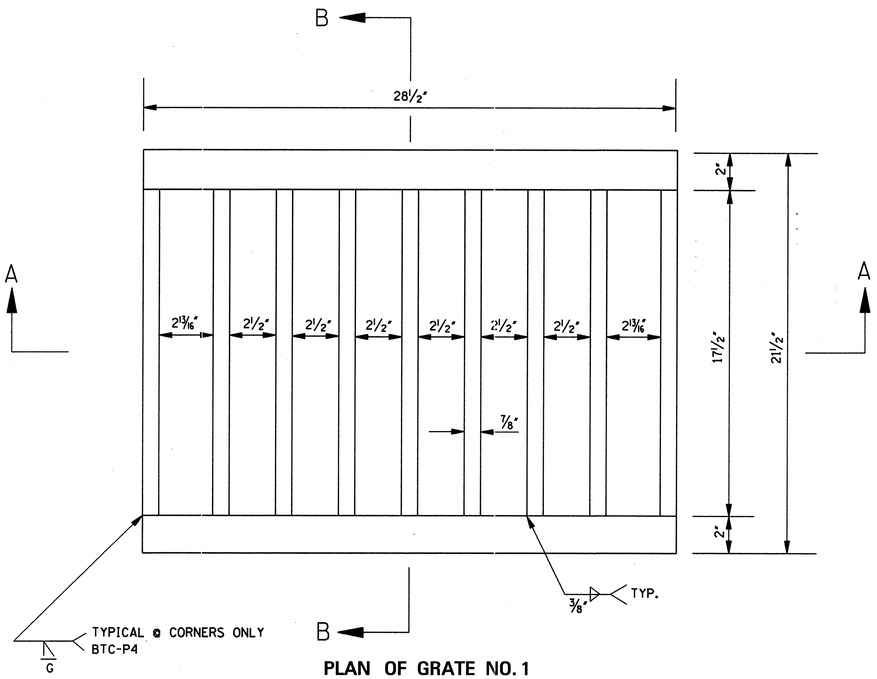

PLAN OF GRATE NO. 1

GRATE NO. 2

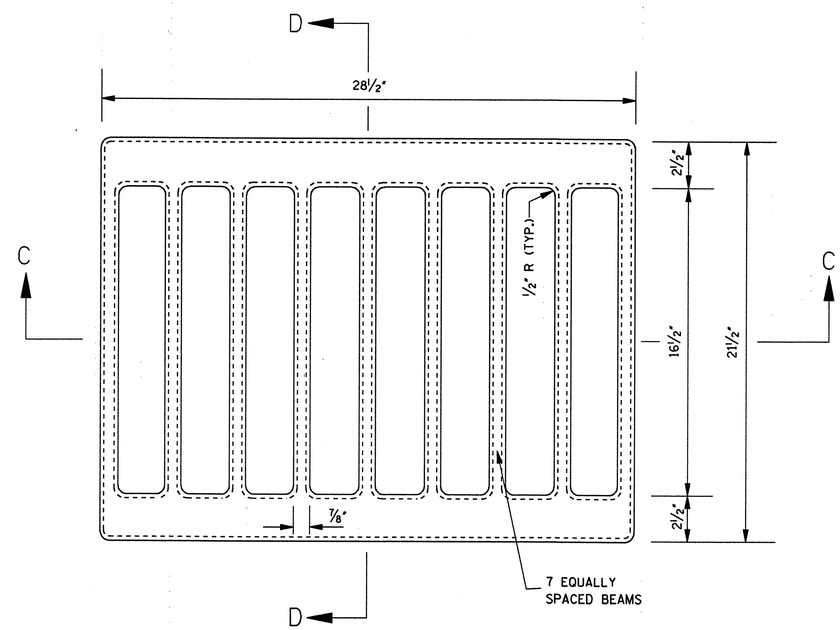

PLAN OF GRATE NO. 2

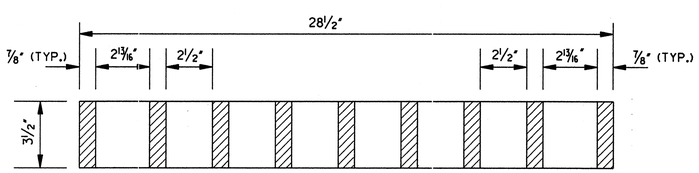

SECTION A–A

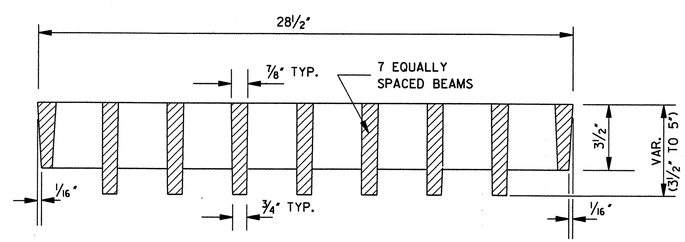

SECTION C–C

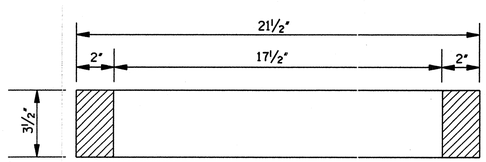

SECTION B–B

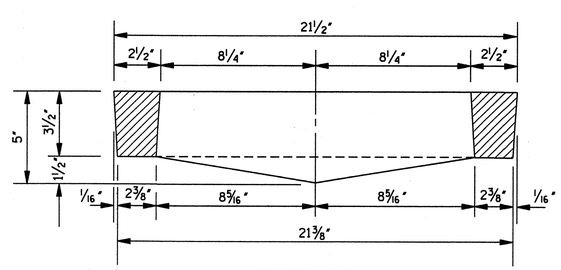

SECTION D–D

GENERAL NOTES:

1. BASIS OF PAYMENT WILL BE 250 lbs OF GRATING FOR EITHER GRATE.
2. GRATE NO.1

   THE GRATE MAY BE WELDED STEEL (ASTM A 588) OR STEEL CASTING (AASHTO M 192, CLASS 90). STEEL CASTING SHALL BE GALVANIZED (AASHTO M 111).
3. GRATE NO.2

   THE GRATE SHALL BE DUCTILE IRON (ASTM A 536, GRADE 80-55-06).

DATE	REVISION	BY

MISSISSIPPI DEPARTMENT OF TRANSPORTATION
ROADWAY DESIGN DIVISION
STANDARD PLAN

DETAILS OF GRATES FOR MEDIAN INLETS

ENGLISH

WORKING NUMBER IG-1

ISSUE DATE: OCTOBER 1, 1998

SHEET NUMBER 314

STATE	PROJECT NO.
MISS.	

GRATE NO. 1 – ALTERNATE #1

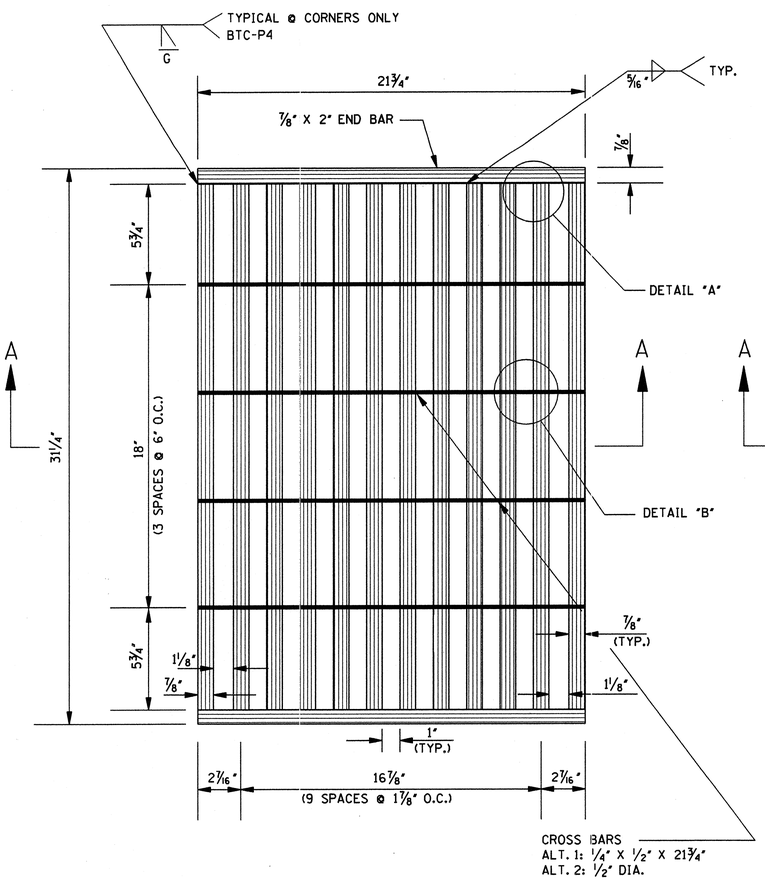

PLAN

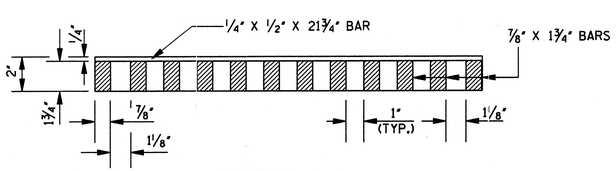

SECTION A–A

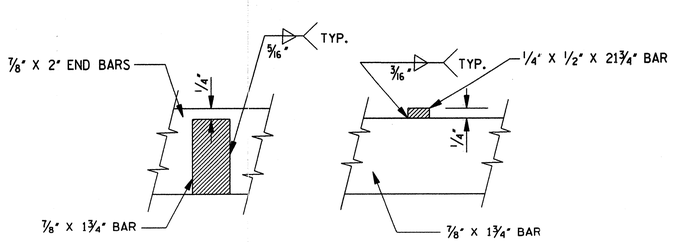

DETAIL A DETAIL B

GRATE NO. 1 – ALTERNATE #2

NOTE: PLAN DIMENSIONS FOR ALTERNATE #2 ARE IDENTICAL TO THAT OF ALTERNATE #1 AS SHOWN ON THE FIGURE AT LEFT.

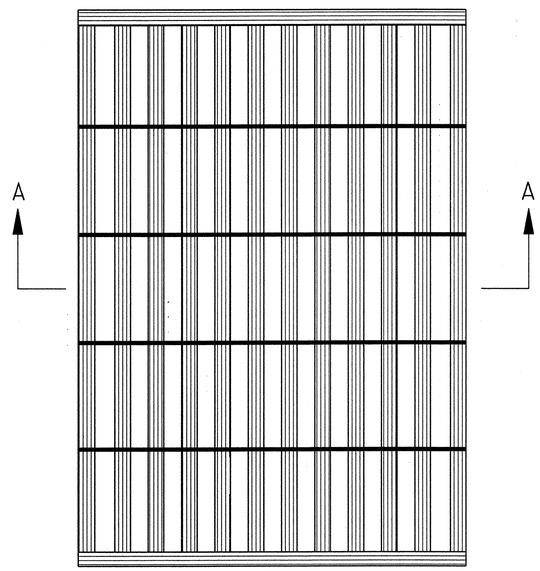

PLAN

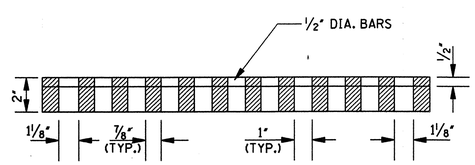

SECTION A–A

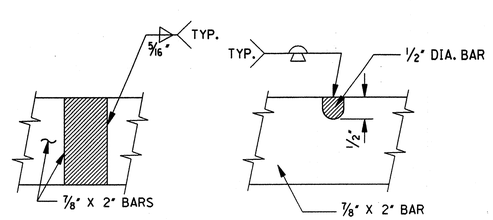

DETAIL A DETAIL B

GRATE NO. 2

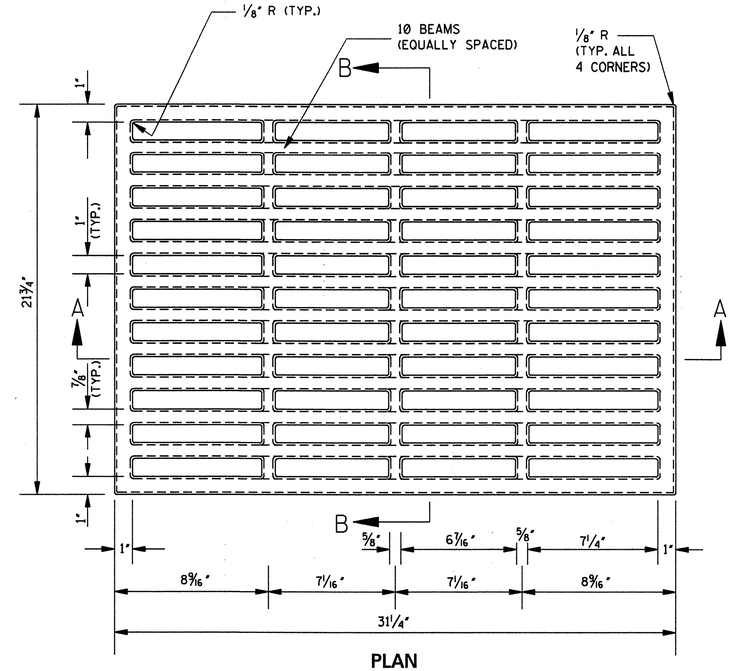

PLAN

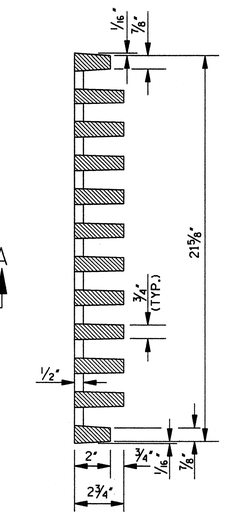

SECTION B–B

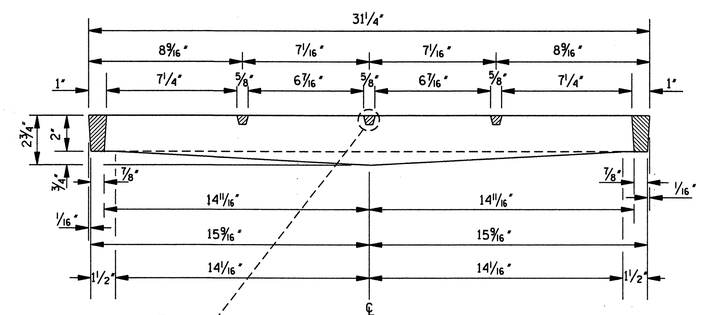

SECTION A–A

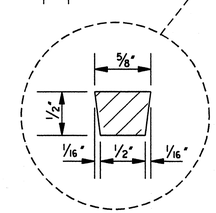

GENERAL NOTES:

1. BASIS OF PAYMENT WILL BE 200 lbs OF GRATING FOR EITHER GRATE.
2. GRATE NO. 1
   THE GRATE MAY BE WELDED STEEL (ASTM A 588) OR STEEL CASTING (AASHTO M 192, CLASS 90).
3. GRATE NO. 2
   THE GRATE SHALL BE DUCTILE IRON (ASTM A 536, GRADE 80-55-06).

DATE	REVISION	BY

MISSISSIPPI DEPARTMENT OF TRANSPORTATION
ROADWAY DESIGN DIVISION
STANDARD PLAN

DETAILS OF GRATES FOR GUTTER INLETS

ENGLISH

WORKING NUMBER IG-2

ISSUE DATE: OCTOBER 1, 1998

SHEET NUMBER 315

STATE	PROJECT NO.
MISS.	

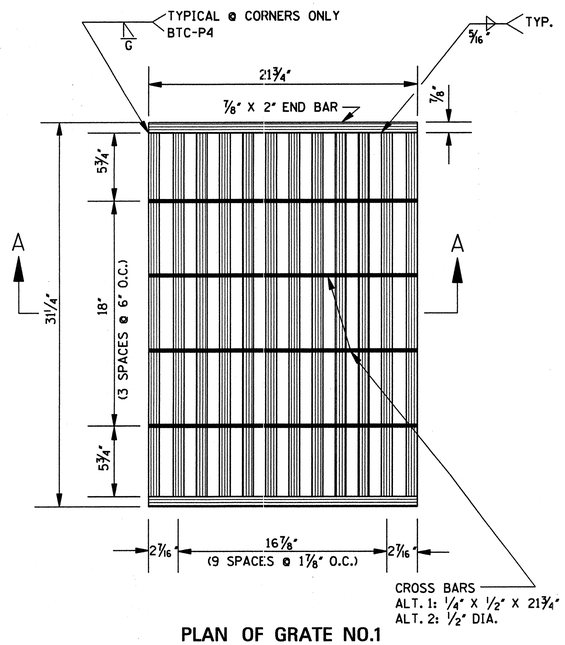

PLAN OF GRATE NO.1

NOTE: FOR OTHER GRATE DETAILS SEE SHEET IG-2.

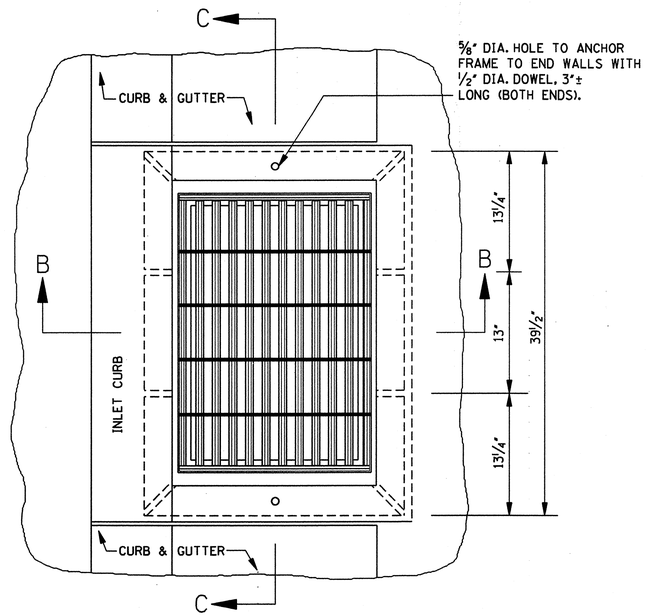

PLAN OF INLET

QUANTITIES									
PIPE SIZE	MIN. DEPTH TO F.L.	MIN. DEPTH INLET		PIPE OPENING DEDUCTION (yd^3)	T	BAR LIST			
		CONC. (yd^3)	STEEL (lbs)			BARS "A" / #4	BARS "B" / #4	BARS "C" / #4	BARS "D" / #4
18"	2.708'	0.763	55	0.053	2½"	2 @ 4'-3"	4 @ 3'-7"	10 @ 3'-1½"	10 @ 2'-10"
24"	3.250'	0.822	57	0.091	3"	2 @ 4'-10"	4 @ 4'-2"	10 @ 3'-1½"	10 @ 2'-10"
22" X 13"	2.333'	0.686	48	0.053	2½"	2 @ 3'-10½"	4 @ 3'-2½"	9 @ 3'-1½"	8 @ 2'-10"

NOTES:
1. ONE (1) PIPE OPENING HAS BEEN DEDUCTED FROM THE STRUCTURE.
2. FOR EACH ADDITIONAL FOOT OF INLET HEIGHT, ADD 0.238 yd^3 CLASS "B" CONCRETE AND 13 lbs REINFORCING STEEL.
3. 3 BARS "C" AND 2 BARS "D" REQUIRED PER EACH ADDITIONAL FOOT OF INLET HEIGHT. LENGTH OF BARS "A" & BARS "B" WILL BE INCREASED ACCORDING TO ADDITIONAL HEIGHT.
4. WEIGHT OF FRAME CASTING = 244 lbs.
   WEIGHT OF GRATE = SEE SHEET IG-2.

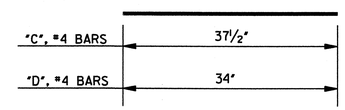

BARS "C" & "D"

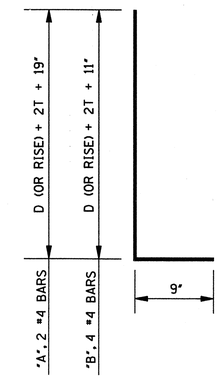

BARS "A" & "B"

BAR DETAILS

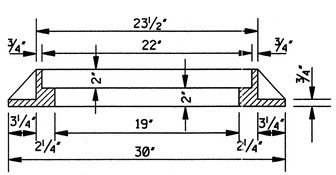

SECTION B–B
(FRAME)

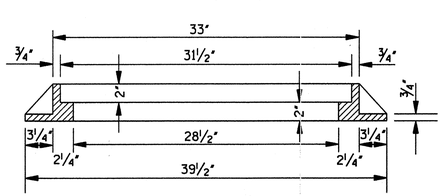

SECTION C–C
(FRAME)

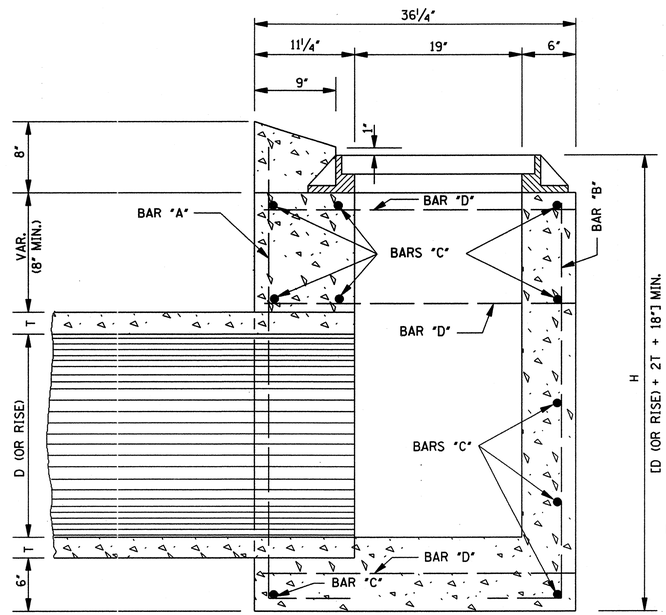

SECTION B–B

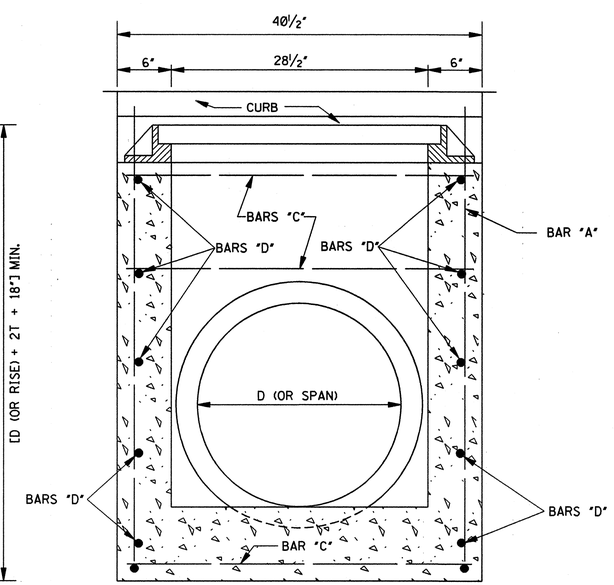

SECTION C–C

GENERAL NOTES:

1. QUANTITIES SHOWN WILL BE THE BASIS OF PAYMENT UNLESS AUTHORIZED MODIFICATIONS ARE MADE.
2. CONCRETE SHALL BE CLASS "B" CONCRETE AND REINFORCING STEEL SHALL BE DEFORMED BARS.
3. THE CONTRACTOR HAS THE OPTION TO PROVIDE GRATE NO. 1 OR GRATE NO. 2 AS SHOWN ON SHEET IG-2.
4. FRAME TO BE GRAY IRON CASTING, (AASHTO M 105, CLASS 30).

DATE	REVISION	BY

MISSISSIPPI DEPARTMENT OF TRANSPORTATION
ROADWAY DESIGN DIVISION
STANDARD PLAN

GUTTER INLET FOR TYPE 2 CURB
(OUTLET 90° TO ROADWAY)

ENGLISH

WORKING NUMBER
GI-1

ISSUE DATE: OCTOBER 1, 1998

SHEET NUMBER
316

STATE	PROJECT NO.
MISS.	

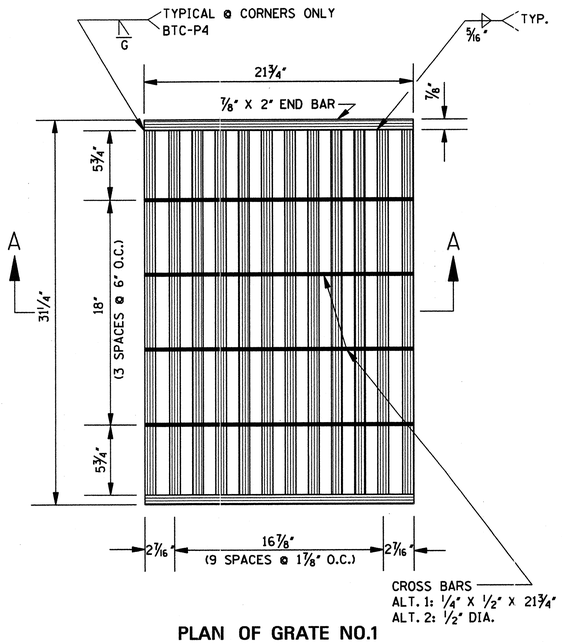

PLAN OF GRATE NO.1

NOTE: FOR OTHER GRATE DETAILS SEE SHEET IG-2.

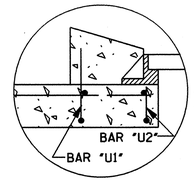

DETAIL OF MINIMUM HEIGHT INLET

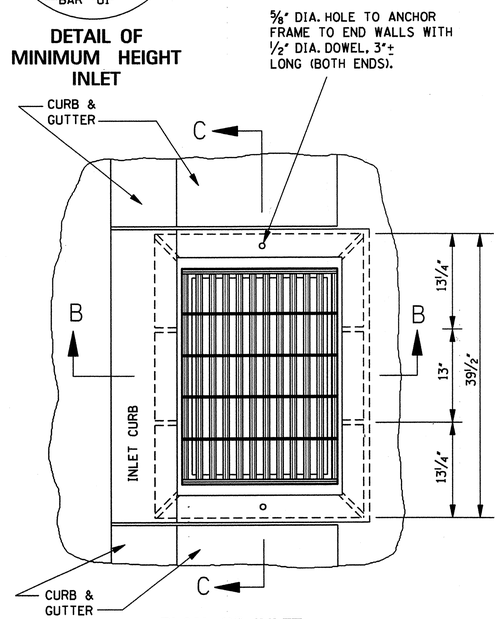

PLAN OF INLET

QUANTITIES

PIPE SIZE	MIN. DEPTH TO F.L.	MIN. DEPTH INLET CONC. (yd³)	MIN. DEPTH INLET STEEL (lbs)	PIPE OPENING DEDUCTION (yd³)	T	BARS/SIZES "A" #4 NO. @ LGTH.	"B" #4 NO. @ LGTH.	"C" #4 NO. @ LGTH.	"D" #4 NO. @ LGTH.	"E" #4 NO. @ LGTH.	"U1" #4 NO. @ LGTH.	"U2" #4 NO. @ LGTH.
18"	2.792'	0.973	67	0.053	2 1/2"	4 @ 5'-0"	4 @ 3'-8"	10 @ 3'- 1 1/2"	2 @ 2'-9"	6 @ 3'-5"	1 @ 4'-11 1/2"	1 @ 3'-9 1/2"
24"	3.333'	1.259	78	0.091	3"	4 @ 6'-2"	4 @ 4'-3"	12 @ 3'- 1 1/2"	2 @ 2'-9"	6 @ 4'-0"	1 @ 4'-11 1/2"	1 @ 3'-9 1/2"
30"	3.875'	1.574	88	0.138	3 1/2"	4 @ 7'-4"	4 @ 4'-10"	13 @ 3'- 1 1/2"	2 @ 2'-9"	6 @ 4'-7"	1 @ 4'-11 1/2"	1 @ 3'-9 1/2"
36"	4.417'	1.918	101	0.196	4"	4 @ 8'-6"	4 @ 5'-5"	16 @ 3'- 1 1/2"	2 @ 2'-9"	6 @ 5'-2"	1 @ 4'-11 1/2"	1 @ 3'-9 1/2"
42"	4.958'	2.292	112	0.263	4 1/2"	4 @ 9'-8"	4 @ 6'-0"	18 @ 3'- 1 1/2"	2 @ 2'-9"	6 @ 5'-9"	1 @ 4'-11 1/2"	1 @ 3'-9 1/2"
48"	5.500'	2.695	121	0.340	5"	4 @ 10'-10"	4 @ 6'-7"	19 @ 3'- 1 1/2"	2 @ 2'-9"	6 @ 6'-4"	1 @ 4'-11 1/2"	1 @ 3'-9 1/2"
54"	6.042'	3.128	132	0.427	5 1/2"	4 @ 12'-0"	4 @ 7'-2"	21 @ 3'- 1 1/2"	2 @ 2'-9"	6 @ 6'-11"	1 @ 4'-11 1/2"	1 @ 3'-9 1/2"
60"	6.583'	3.591	146	0.524	6"	4 @ 13'-2"	4 @ 7'-9"	24 @ 3'- 1 1/2"	2 @ 2'-9"	6 @ 7'-6"	1 @ 4'-11 1/2"	1 @ 3'-9 1/2"
66"	7.125'	4.082	159	0.630	6 1/2"	4 @ 14'-4"	4 @ 8'-4"	27 @ 3'- 1 1/2"	2 @ 2'-9"	6 @ 8'-1"	1 @ 4'-11 1/2"	1 @ 3'-9 1/2"
72"	7.667'	4.604	168	0.747	7"	4 @ 15'-6"	4 @ 8'-11"	28 @ 3'- 1 1/2"	2 @ 2'-9"	6 @ 8'-8"	1 @ 4'-11 1/2"	1 @ 3'-9 1/2"
22" X 13"	2.417'	0.991	67	0.053	2 1/2"	4 @ 4'-11 1/2"	4 @ 3'-3 1/2"	10 @ 3'- 1 1/2"	2 @ 2'-9"	6 @ 3'-9"	1 @ 4'-11 1/2"	1 @ 3'-9 1/2"
29" X 18"	2.833'	1.222	82	0.087	3"	4 @ 6'-1/2"	4 @ 3'-9"	13 @ 3'- 1 1/2"	2 @ 2'-9"	6 @ 4'-5"	1 @ 4'-11 1/2"	1 @ 3'-9 1/2"
36" X 23"	3.250'	1.537	90	0.129	3 1/2"	4 @ 7'-3"	4 @ 4'-2 1/2"	14 @ 3'- 1 1/2"	2 @ 2'-9"	6 @ 5'-1 1/2"	1 @ 4'-11 1/2"	1 @ 3'-9 1/2"
44" X 27"	3.667'	1.877	97	0.185	4"	4 @ 8'-5"	4 @ 4'-8"	14 @ 3'- 1 1/2"	2 @ 2'-9"	6 @ 5'-10"	1 @ 4'-11 1/2"	1 @ 3'-9 1/2"
51" X 31"	4.068'	2.237	110	0.245	4 1/2"	4 @ 9'-7"	4 @ 5'-1 1/2"	17 @ 3'- 1 1/2"	2 @ 2'-9"	6 @ 6'-6"	1 @ 4'-11 1/2"	1 @ 3'-9 1/2"
58" X 36"	4.500'	2.637	120	0.318	5"	4 @ 10'-8 1/2"	4 @ 5'-7"	18 @ 3'- 1 1/2"	2 @ 2'-9"	6 @ 7'-2 1/2"	1 @ 4'-11 1/2"	1 @ 3'-9 1/2"
65" X 40"	4.875'	3.020	132	0.394	5 1/2"	4 @ 11'-9"	4 @ 6'-0"	21 @ 3'- 1 1/2"	2 @ 2'-9"	6 @ 7'-10"	1 @ 4'-11 1/2"	1 @ 3'-9 1/2"
73" X 45"	5.333'	3.505	140	0.489	6"	4 @ 13'-0"	4 @ 6'-6"	21 @ 3'- 1 1/2"	2 @ 2'-9"	6 @ 8'-7"	1 @ 4'-11 1/2"	1 @ 3'-9 1/2"
88" X 54"	6.167'	4.504	163	0.688	7"	4 @ 15'-4"	4 @ 7'-5"	25 @ 3'- 1 1/2"	2 @ 2'-9"	6 @ 10'-0"	1 @ 4'-11 1/2"	1 @ 3'-9 1/2"

NOTES:
1. NO PIPE OPENINGS HAVE BEEN DEDUCTED FROM QUANTITY SHOWN.
2. FOR EACH ADDITIONAL FOOT OF INLET HEIGHT, ADD 0.238 yd³ CLASS "B" CONCRETE AND 13 lbs REINFORCING STEEL.
3. 3 BARS "C" AND 2 BARS "D" REQUIRED PER EACH ADDITIONAL FOOT OF INLET HEIGHT. LENGTH OF BARS "B" WILL INCREASE WITH ADDITIONAL HEIGHT.
4. WEIGHT OF FRAME CASTING = 244 lbs.
   WEIGHT OF GRATE = SEE SHEET IG-2.

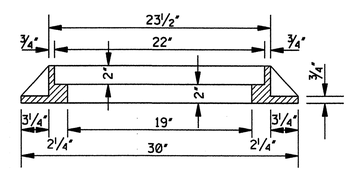

SECTION B–B
(FRAME)

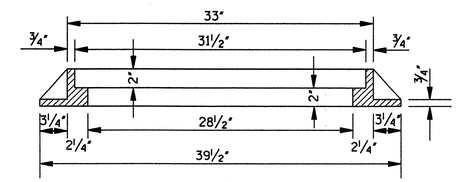

SECTION C–C
(FRAME)

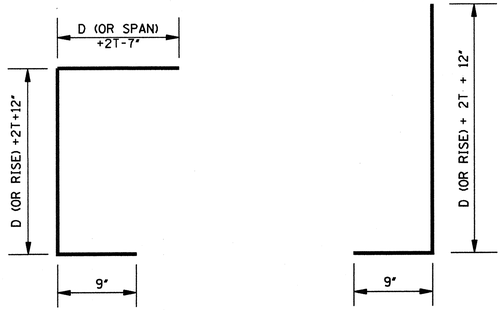

4 #4 BARS,
[D (OR RISE) +D (OR SPAN)+4T+14"] LONG

BARS "A"

4 #4 BARS,
[D (OR RISE)+2T+21"] LONG

BARS "B"

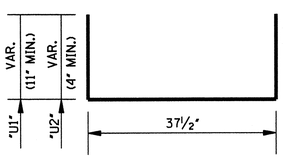

1 #4 BAR EACH, VAR. LENGTH

BARS "U1" & "U2"

"C", #4 BARS	37 1/2"
"D", #4 BARS	33"
"E", #4 BARS	D (OR SPAN) +2T+18"

BARS "C", "D" & "E"

BAR DETAILS

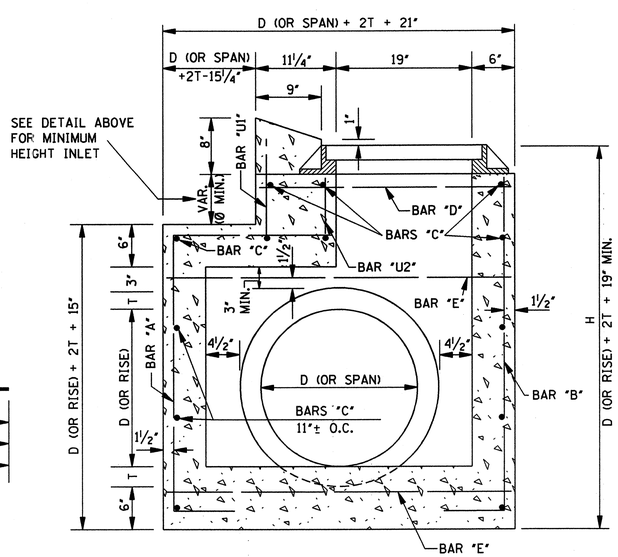

SECTION B–B

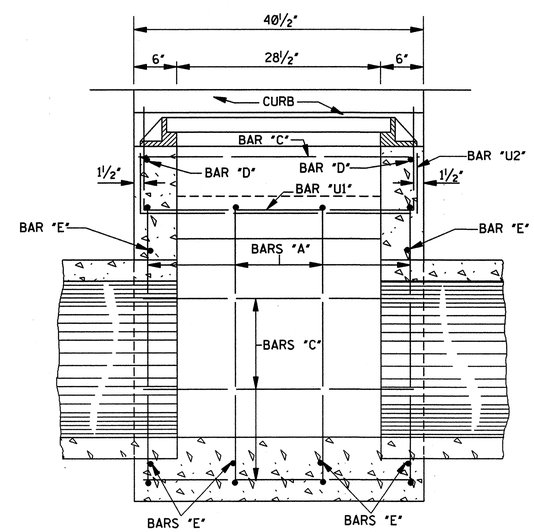

SECTION C–C

GENERAL NOTES:

1. QUANTITIES SHOWN WILL BE THE BASIS OF PAYMENT UNLESS AUTHORIZED MODIFICATIONS ARE MADE.
2. CONCRETE SHALL BE CLASS "B" CONCRETE AND REINFORCING STEEL SHALL BE DEFORMED BARS.
3. THE CONTRACTOR HAS THE OPTION TO PROVIDE GRATE NO. 1 OR GRATE NO. 2 AS SHOWN ON SHEET IG-2.
4. FRAME TO BE GRAY IRON CASTING, (AASHTO M 105, CLASS 30).

DATE	REVISION	BY

MISSISSIPPI DEPARTMENT OF TRANSPORTATION
ROADWAY DESIGN DIVISION
STANDARD PLAN

GUTTER INLET FOR TYPE 2 CURB STORM SEWER ALONG ROADWAY

ENGLISH

WORKING NUMBER
GI-1A

ISSUE DATE: OCTOBER 1, 1998

SHEET NUMBER
317

STATE	PROJECT NO.
MISS.	

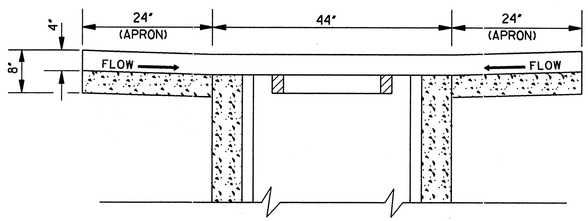

SECTION A–A

NOTE: APRON REINFORCEMENT & SOLID SOD NOT SHOWN (SEE SECTION C-C).

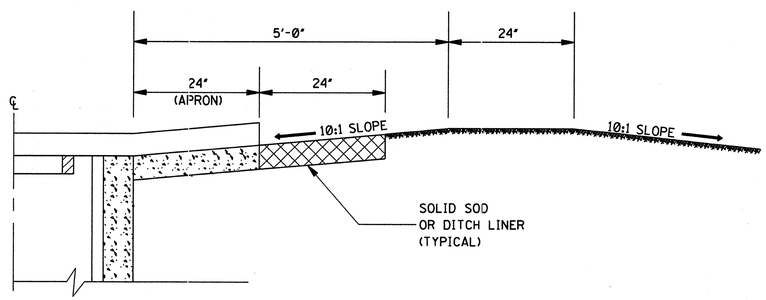

HALF SECTION A–A SHOWING DITCH PLUG

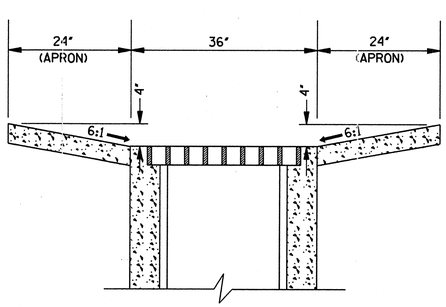

SECTION B–B

NOTE: APRON REINFORCEMENT & SOLID SOD NOT SHOWN (SEE SECTION C-C).

TYPICAL #4 BARS, 30" LONG, SPACED 18" ON CENTER (REQUIRED WHERE PAVED DITCH IS USED. NOT A PAY ITEM).

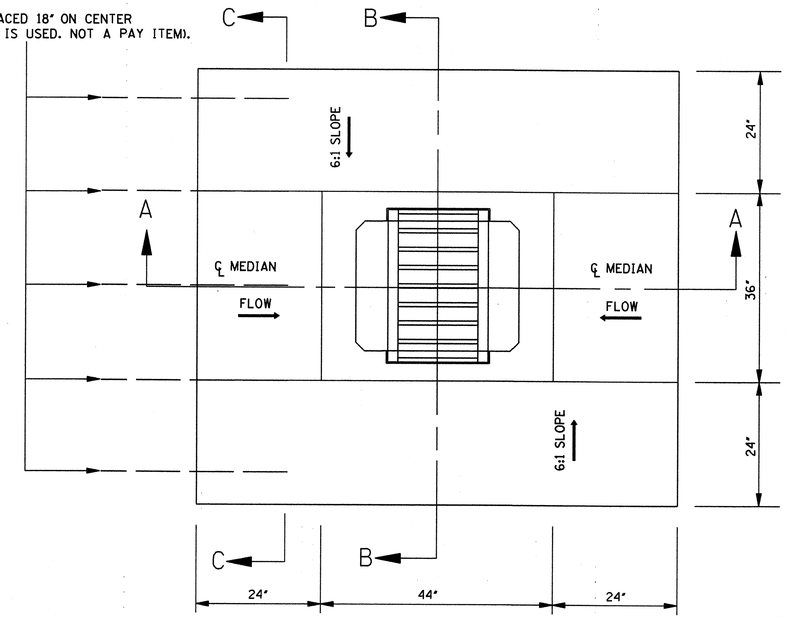

PLAN OF INLET & PAVED APRON

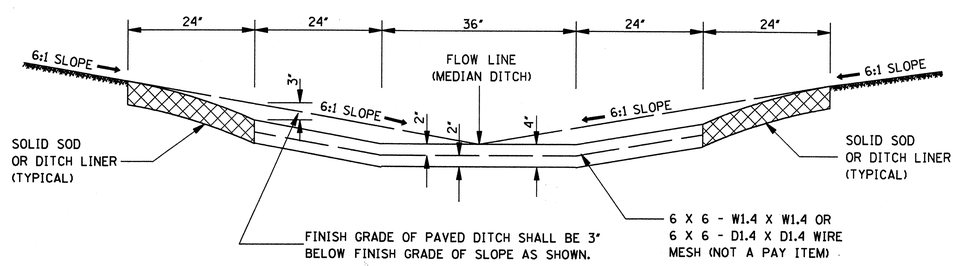

SECTION C–C

GENERAL NOTES:

1. CONSTRUCTION JOINTS TO BE TIED WITH 5 #4 BARS, 30" LONG, SPACED 18" ON CENTER. EXPANSION JOINT WILL NOT BE USED. CHAIR SUPPORTS FOR THE WIRE MESH WILL NOT BE REQUIRED. HOWEVER, THE CONTRACTOR SHALL PLACE THE WIRE MESH IN A SATISFACTORY AND WORKMANLIKE MANNER TO ENSURE THAT THE FINAL POSITION IS REASONABLY NEAR THE POSITION INDICATED.
2. PAVED APRON TO BE CONSTRUCTED AND PAID FOR IN ACCORDANCE WITH THE REQUIREMENTS FOR PAVED DITCHES.
3. 0.532 yd^3 CLASS "C" CONCRETE REQUIRED.
4. QUANTITY SHOWN WILL BE USED AS THE BASIS FOR FINAL PAYMENT UNLESS AUTHORIZED MODIFICATIONS ARE MADE.

DATE	REVISION	BY

MISSISSIPPI DEPARTMENT OF TRANSPORTATION
ROADWAY DESIGN DIVISION
STANDARD PLAN

PAVED INLET APRON AND MEDIAN DITCH PLUG

DEPARTMENT OF TRANSPORTATION ENGLISH MISSISSIPPI

WORKING NUMBER PA-1

ISSUE DATE: OCTOBER 1, 1998

SHEET NUMBER 318

STATE	PROJECT NO.
MISS.	

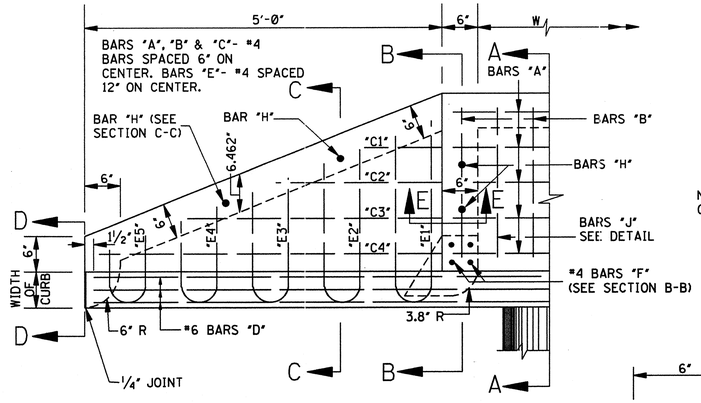

HALF PLAN

NOTE: SHOWS STEEL IN BOTH INLET & WING COVER. FOR METHOD OF ANCHORING INLET WINGS TO PAVEMENT, SEE SECTION C-C.

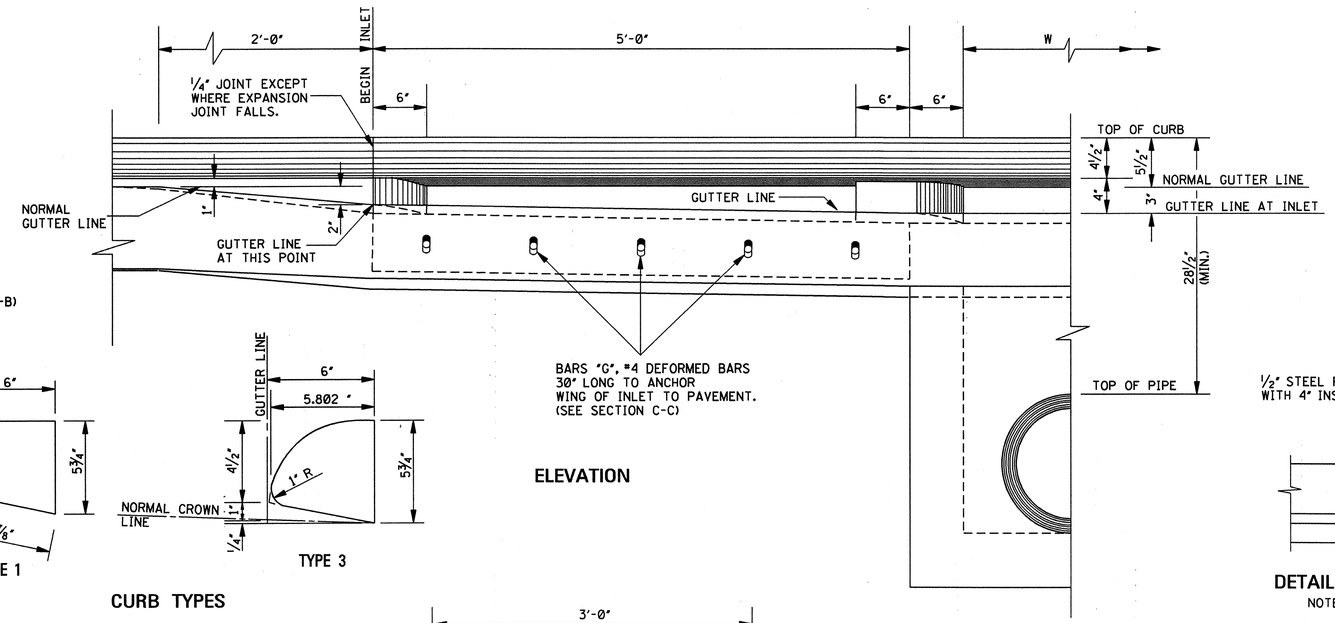

ELEVATION

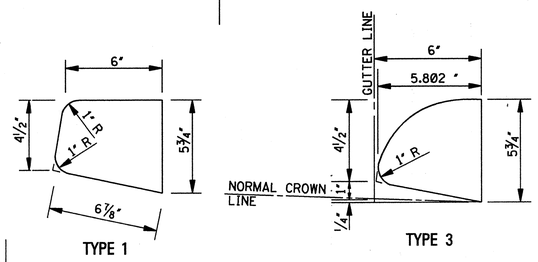

CURB TYPES

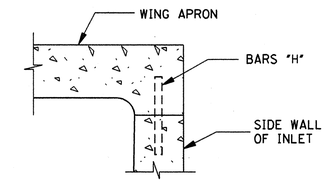

SECTION E–E

NOTE: SHOWS CONNECTION BETWEEN SIDE WALL OF INLET AND WING WALL.

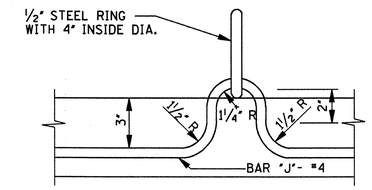

DETAIL OF HANDLE FOR INLET COVER

NOTE: TWO REQUIRED FOR INLET COVER.

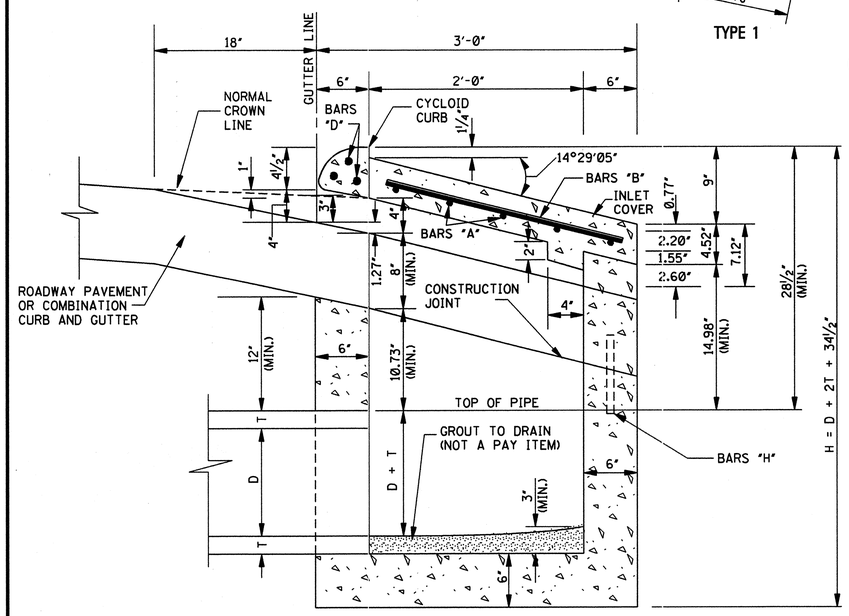

SECTION A–A

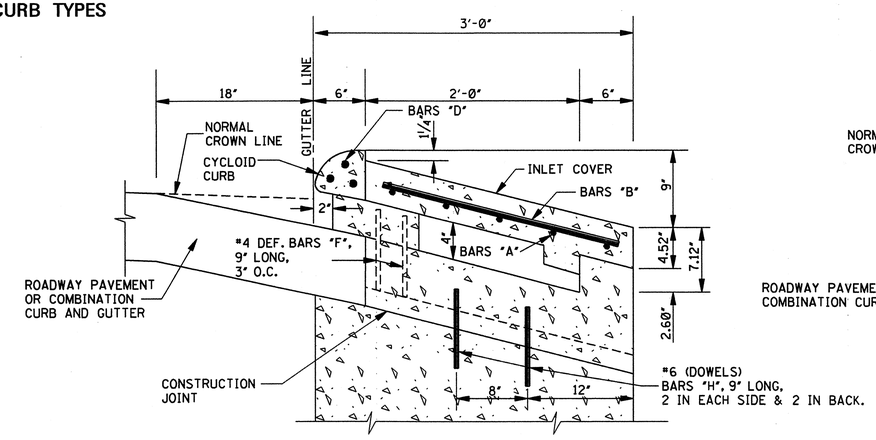

SECTION B–B

NOTE: SHOWS METHOD OF ANCHORING SUPPORTS FOR CURB AND INLET COVER TO WALL OF INLET.

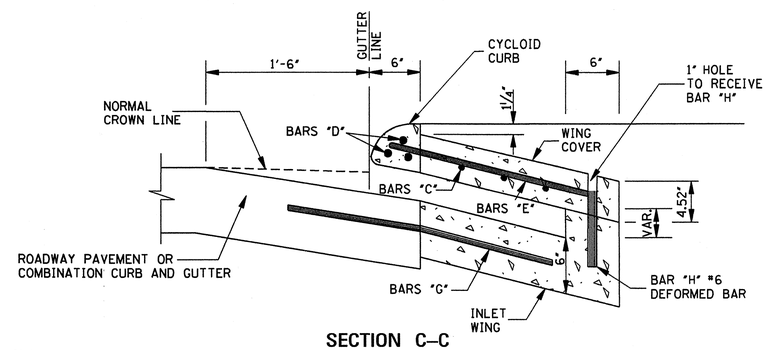

SECTION C–C

NOTE: WING COVERS MAY BE PRECAST.

GENERAL NOTES:

1. MATERIALS AND WORKMANSHIP SHALL BE IN ACCORDANCE WITH THE STANDARD SPECIFICATIONS OF THE MISSISSIPPI DEPARTMENT OF TRANSPORTATION.
2. THE QUANTITIES SHOWN WILL BE USED AS THE BASIS FOR FINAL PAYMENT UNLESS AUTHORIZED MODIFICATIONS ARE MADE.

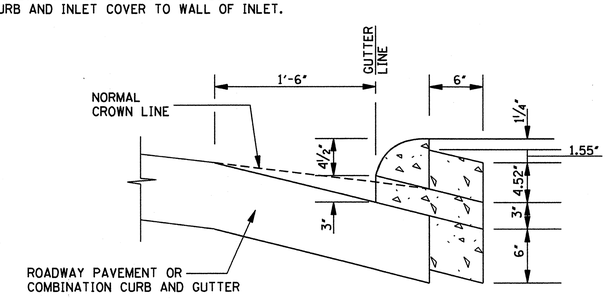

SECTION D–D

DIMENSIONS				QUANTITIES					STEEL IN INLET, CURB AND INLET COVER														STEEL IN BOTH WING COVERS		
MIN. HEIGHT H (ft)	WALL THICK T (in)	DIA. OF PIPE D (in)	W (ft-in)	MINIMUM DEPTH		EACH ADDED FOOT		DEDUCT FOR EACH OPENING (yd³)	BARS "A" #4		BARS "B" #4		BARS "D" #6		BARS "F" #4		BARS "G" #4		BARS "H" #6		BARS "J" #4				
				CONCRETE (yd³)	STEEL (lbs)	CONCRETE (yd³)	STEEL (lbs)		NO.	LGTH.	NO.	LGTH.	NO.	LGTH.	NO.	LGTH.	NO.	LGTH.	NO.	LGTH.	NO.	LGTH.	BAR	NO.	LGTH.
4.21'	2"	12"	2'-0"	1.40	151	0.185	NONE	0.026	5	2'-8"	4	2'-2"	3	12'-9"	8	0'-9"	10	2'-6"	10	0'-9"	2	2'-9"	C1	2	1'-3"
4.50'	2¼"	15"	2'-0"	1.45	151	0.185	NONE	0.038	5	2'-8"	4	2'-2"	3	12'-9"	8	0'-9"	10	2'-6"	10	0'-9"	2	2'-9"	C2	2	2'-6"
4.79'	2½"	18"	2'-3"	1.50	151	0.185	NONE	0.053	5	2'-11"	4	2'-2"	3	12'-9"	8	0'-9"	10	2'-6"	10	0'-9"	2	2'-9"	C3	2	3'-9"
5.08'	2¾"	21"	2'-6"	1.66	156	0.204	NONE	0.069	5	3'-2"	5	2'-2"	3	13'-3"	8	0'-9"	10	2'-6"	10	0'-9"	2	2'-9"	C4	2	4'-8"
5.38'	3"	24"	2'-10"	1.78	158	0.213	NONE	0.091	5	3'-6"	5	2'-2"	3	13'-6"	8	0'-9"	10	2'-6"	10	0'-9"	2	2'-9"	E1	2	5'-8"
5.67'	3¼"	27"	3'-1"	1.91	162	0.222	NONE	0.113	5	3'-9"	6	2'-2"	3	13'-9"	8	0'-9"	10	2'-6"	10	0'-9"	2	2'-9"	E2	2	4'-10"
5.96'	3½"	30"	3'-5"	2.04	163	0.231	NONE	0.138	5	4'-1"	6	2'-2"	3	14'-0"	8	0'-9"	10	2'-6"	10	0'-9"	2	2'-9"	E3	2	4'-0"
6.54'	4"	36"	4'-0"	2.32	169	0.253	NONE	0.196	5	4'-8"	7	2'-2"	3	14'-6"	8	0'-9"	10	2'-6"	10	0'-9"	2	2'-9"	E4	2	3'-2"
7.71'	5"	48"	5'-2"	2.99	183	0.296	NONE	0.340	5	5'-10"	10	2'-2"	3	15'-9"	8	0'-9"	10	2'-6"	10	0'-9"	2	2'-9"	E5	2	2'-4"

BY	REVISION	DATE

MISSISSIPPI DEPARTMENT OF TRANSPORTATION
ROADWAY DESIGN DIVISION
STANDARD PLAN

STORM SEWER INLET TYPE SS-1

ENGLISH

WORKING NUMBER SS-1

ISSUE DATE: OCTOBER 1, 1998

SHEET NUMBER 319

STATE	PROJECT NO.
MISS.	

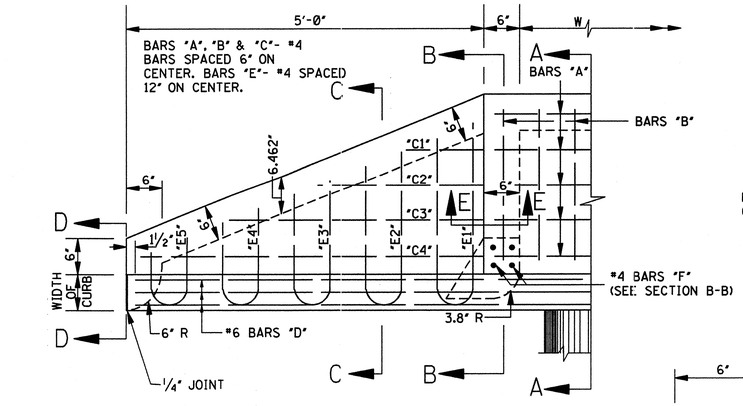

HALF PLAN

NOTE: SHOWS STEEL IN BOTH INLET & WING COVER. FOR METHOD OF ANCHORING INLET WINGS TO PAVEMENT, SEE SECTION C-C.

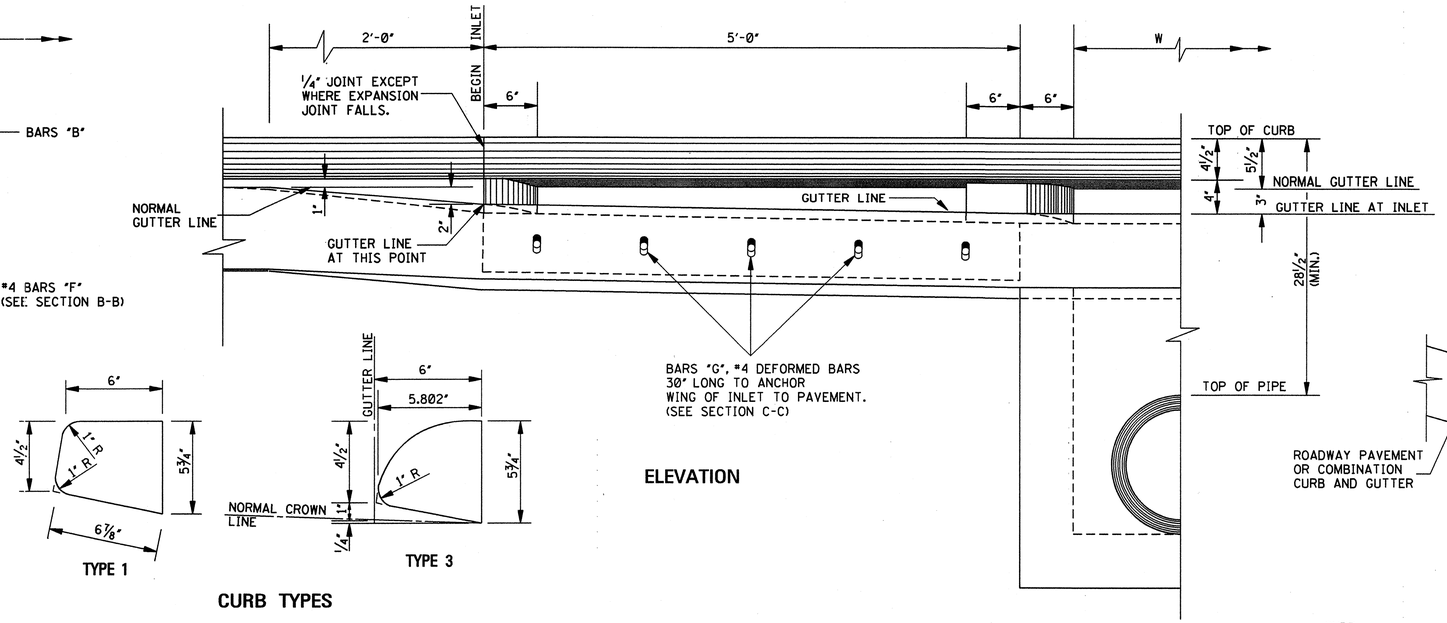

ELEVATION

TYPE 1

TYPE 3

CURB TYPES

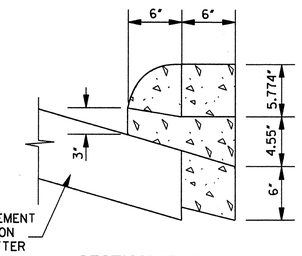

SECTION D–D

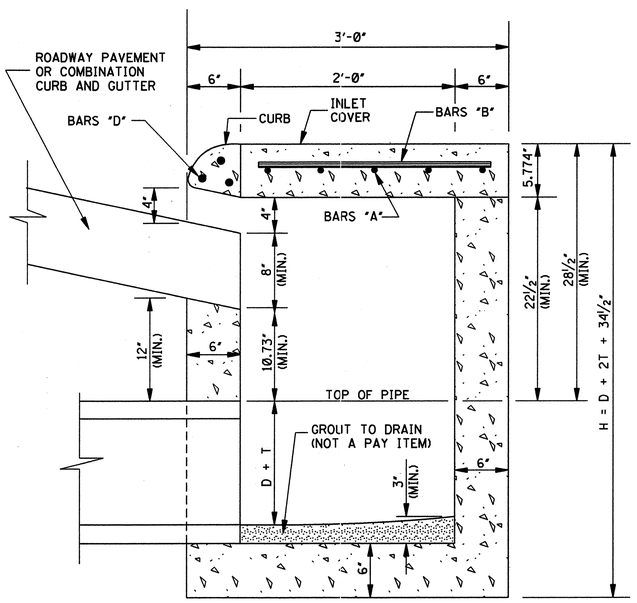

SECTION A–A

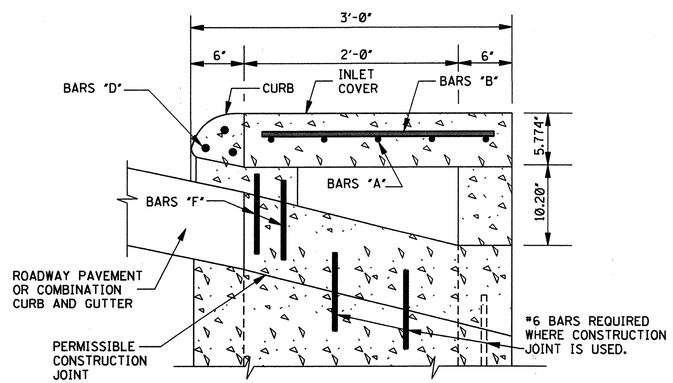

SECTION B–B

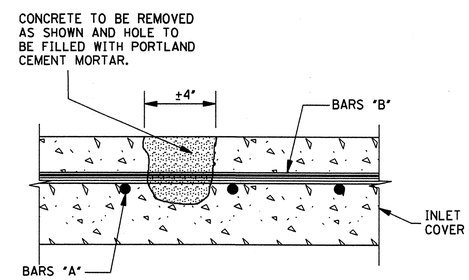

DETAIL SHOWING METHOD OF LIFTING INLET COVER

NOTE: CONCRETE TO BE REMOVED DEEPLY ENOUGH UNDER BAR "B" TO PERMIT ENTRANCE OF HOOK OR OTHER LIFTING DEVICE. (FOUR REQUIRED PER INLET COVER)

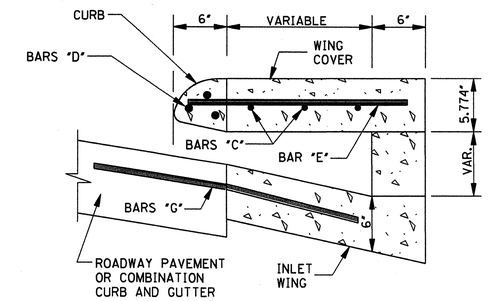

SECTION C–C

GENERAL NOTES:

1. MATERIALS AND WORKMANSHIP SHALL BE IN ACCORDANCE WITH THE STANDARD SPECIFICATIONS OF THE MISSISSIPPI DEPARTMENT OF TRANSPORTATION.
2. THE QUANTITIES SHOWN WILL BE USED AS THE BASIS FOR FINAL PAYMENT UNLESS AUTHORIZED MODIFICATIONS ARE MADE.

DIMENSIONS				QUANTITIES					STEEL IN INLET, CURB AND INLET COVER										STEEL IN BOTH WING COVERS		
MIN. HEIGHT H (ft)	WALL THICK T (in)	DIA. OF PIPE D (in)	W (ft-in)	MIN. DEPTH		EACH ADDED FOOT		DEDUCT FOR EACH OPENING (yd³)	BARS "A" #4		BARS "B" #4		BARS "D" #6		BARS "F" #4		BARS "G" #4				
				CONCRETE (yd³)	STEEL (lbs)	CONCRETE (yd³)	STEEL (lbs)		NO.	LGTH.	NO.	LGTH.	NO.	LGTH.	NO.	LGTH.	NO.	LGTH.	BAR	NO.	LGTH.
4.21'	2"	12"	2'-0"	1.531	139	0.185	NONE	0.026	5	2'-8"	6	2'-2"	3	12'-9"	8	0'-9"	10	2'-6"	C1	2	1'-3"
4.50'	2¼"	15"	2'-0"	1.549	139	0.185	NONE	0.038	5	2'-8"	6	2'-2"	3	12'-9"	8	0'-9"	10	2'-6"	C2	2	2'-6"
4.79'	2½"	18"	2'-3"	1.599	139	0.185	NONE	0.053	5	2'-11"	6	2'-2"	3	12'-9"	8	0'-9"	10	2'-6"	C3	2	3'-9"
																			C4	2	4'-8"
5.38'	3"	24"	2'-10"	1.744	146	0.213	NONE	0.091	5	3'-6"	7	2'-2"	3	13'-6"	8	0'-9"	10	2'-6"	E1	2	5'-8"
																			E2	2	4'-10"
5.96'	3½"	30"	3'-5"	1.863	151	0.231	NONE	0.138	5	4'-1"	8	2'-2"	3	14'-0"	8	0'-9"	10	2'-6"	E3	2	4'-0"
6.54'	4"	36"	4'-0"	1.999	157	0.253	NONE	0.196	5	4'-8"	9	2'-2"	3	14'-6"	8	0'-9"	10	2'-6"	E4	2	3'-2"
7.71'	5"	48"	5'-2"	2.258	171	0.296	NONE	0.340	5	5'-10"	12	2'-2"	3	15'-9"	8	0'-9"	10	2'-6"	E5	2	2'-4"

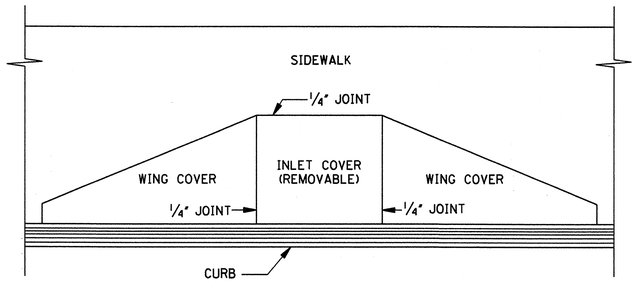

PLAN OF INLET AND ADJACENT SIDEWALK

MISSISSIPPI DEPARTMENT OF TRANSPORTATION
ROADWAY DESIGN DIVISION
STANDARD PLAN

STORM SEWER INLET TYPE SS-1A ADJACENT TO SIDEWALK

BY | REVISION | DATE

ISSUE DATE: OCTOBER 1, 1998

WORKING NUMBER SS-1A

SHEET NUMBER 320

STATE	PROJECT NO.
MISS.	

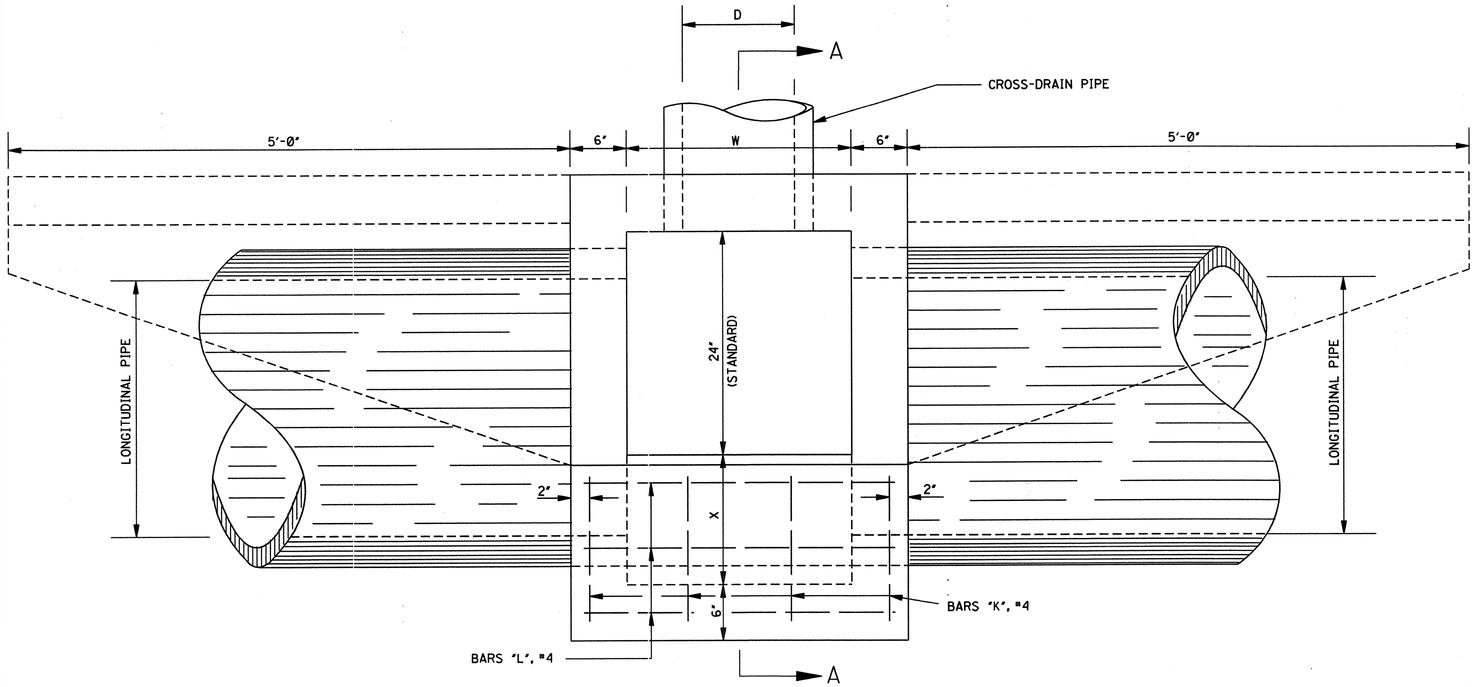

PLAN

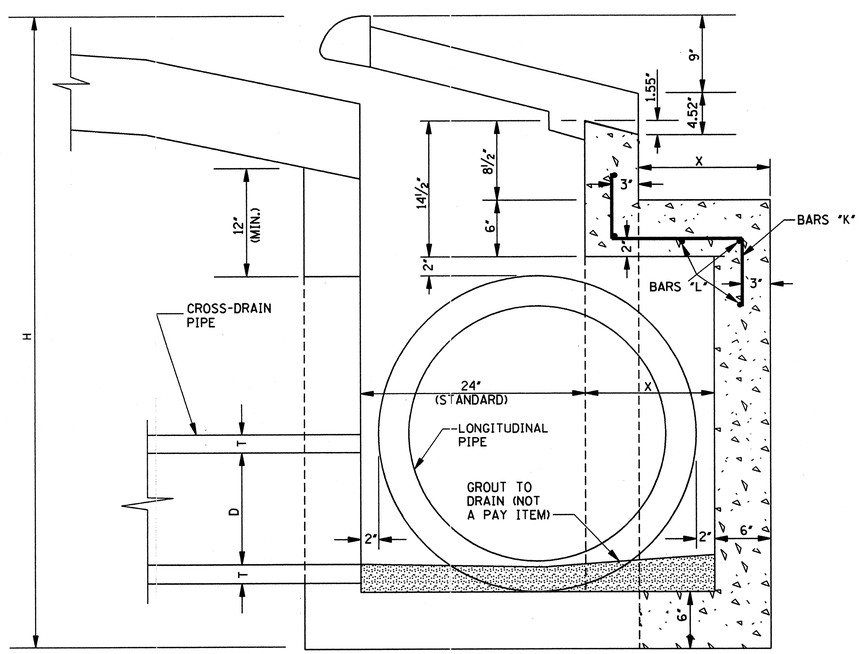

SECTION A–A

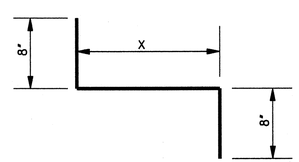

BARS "K", #4

DIMENSIONS					QUANTITIES					ADDITIONAL STEEL IN MODIFIED INLETS			
MIN. HEIGHT H (ft)	WALL THICK T (in)	DIA. OF PIPE D (in)	W (ft-in)	X (in)	MIN. DEPTH CONCRETE (yd^3)	MIN. DEPTH STEEL (lbs)	EACH ADDED FOOT OF DEPTH CONCRETE (yd^3)	EACH ADDED FOOT OF DEPTH STEEL (lbs)	DEDUCT FOR EACH PIPE OPENING (yd^3)	BARS "K" NO.	BARS "K" LENGTH	BARS "L" NO.	BARS "L" LENGTH
24" LONGITUDINAL DRAIN													
5.29'	2¼"	15"	2'-0"	9"	1.75	169	0.213	NONE	0.036	5	2'-1"	5	2'-8"
5.29'	2½"	18"	2'-0"	9"	1.75	169	0.213	NONE	0.049	5	2'-1"	5	2'-8"
5.29'	3"	24"	2'-9"	9"	1.94	180	0.241	NONE	0.085	6	2'-1"	5	3'-5"
5.92'	3½"	30"	3'-3"	9"	2.23	186	0.259	NONE	0.135	6	2'-1"	5	3'-11"
6.46'	4"	36"	3'-10"	9"	2.55	196	0.281	NONE	0.187	7	2'-1"	5	4'-6"
7.63'	5"	48"	5'-0"	9"	3.28	217	0.324	NONE	0.328	9	2'-1"	5	5'-8"
30" LONGITUDINAL DRAIN													
5.92'	2¼"	15"	2'-0"	16½"	2.02	171	0.236	NONE	0.036	5	2'-8½"	5	2'-8"
5.92'	2½"	18"	2'-0"	16½"	2.02	171	0.236	NONE	0.049	5	2'-8½"	5	2'-8"
5.92'	3"	24"	2'-9"	16½"	2.25	182	0.264	NONE	0.085	6	2'-8½"	5	3'-5"
5.92'	3½"	30"	3'-3"	16½"	2.40	189	0.283	NONE	0.135	6	2'-8½"	5	3'-11"
6.46'	4"	36"	3'-10"	16½"	2.75	199	0.304	NONE	0.187	7	2'-8½"	5	4'-6"
7.63'	5"	48"	5'-0"	16½"	3.53	221	0.347	NONE	0.328	9	2'-8½"	5	5'-8"
36" LONGITUDINAL DRAIN													
6.46'	2¼"	15"	2'-0"	23"	2.29	174	0.256	NONE	0.036	5	3'-3"	6	2'-8"
6.46'	2½"	18"	2'-0"	23"	2.29	174	0.256	NONE	0.049	5	3'-3"	6	2'-8"
6.46'	3"	24"	2'-9"	23"	2.55	187	0.284	NONE	0.085	6	3'-3"	6	3'-5"
6.46'	3½"	30"	3'-3"	23"	2.72	194	0.303	NONE	0.135	6	3'-3"	6	3'-11"
6.46'	4"	36"	3'-10"	23"	2.92	205	0.324	NONE	0.187	7	3'-3"	6	4'-6"
7.63'	5"	48"	5'-0"	23"	3.75	228	0.367	NONE	0.328	9	3'-3"	6	5'-8"
48" LONGITUDINAL DRAIN													
7.63'	2¼"	15"	2'-0"	37"	2.93	182	0.299	NONE	0.036	5	4'-5"	8	2'-8"
7.63'	2½"	18"	2'-0"	37"	2.93	182	0.299	NONE	0.049	5	4'-5"	8	2'-8"
7.63'	3"	24"	2'-9"	37"	3.25	196	0.327	NONE	0.085	6	4'-5"	8	3'-5"
7.63'	3½"	30"	3'-3"	37"	3.47	204	0.346	NONE	0.135	6	4'-5"	8	3'-11"
7.63'	4"	36"	3'-10"	37"	3.72	216	0.367	NONE	0.187	7	4'-5"	8	4'-6"
7.63'	5"	48"	5'-0"	37"	4.22	243	0.410	NONE	0.328	9	4'-5"	8	5'-8"

GENERAL NOTES:

1. PLAN SHOWN HEREON IS A MODIFICATION OF AND ADAPTABLE TO SPECIAL DESIGN INLET TYPE SS-1.
2. FOR INLET DETAILS NOT SHOWN HEREON REFER TO SHEET SS-1.
3. QUANTITIES SHOWN ARE FOR USE WITH 6", 8" OR 9" UNIFORM CONCRETE PAVEMENT. WHERE COMBINATION CONCRETE CURB AND GUTTER IS USED, THE CLASS "B" CONCRETE QUANTITIES SHALL BE INCREASED BY 0.040 yd^3/ft OF GUTTER LENGTH (10'-0" + W + 1'-0") IN FEET.
4. QUANTITIES SHOWN ARE TO BE REDUCED BY VOLUME DISPLACEMENT IN CONCRETE FOR EACH PIPE OPENING AND WILL BE USED AS BASIS FOR FINAL PAYMENT FOR INLETS CONSTRUCTED AS PER SCHEDULE OF PIPE SIZES IN ABOVE TABULATION.
5. THE STANDARD SPECIFICATIONS ADOPTED BY THE MISSISSIPPI DEPARTMENT OF TRANSPORTATION SHALL APPLY TO ALL ITEMS ON THIS SHEET.

MISSISSIPPI DEPARTMENT OF TRANSPORTATION
ROADWAY DESIGN DIVISION
STANDARD PLAN

STORM SEWER INLET
TYPE SS-1B
(LONGITUDINAL DRAINAGE)

ENGLISH

WORKING NUMBER SS-1B

SHEET NUMBER 321

DATE | REVISION | BY

ISSUE DATE: OCTOBER 1, 1998

STATE	PROJECT NO.
MISS.	

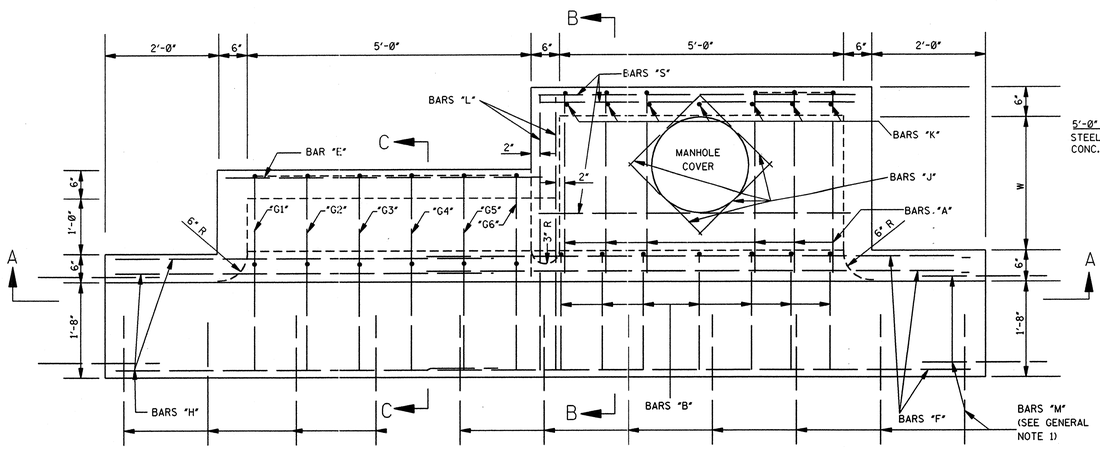

PLAN

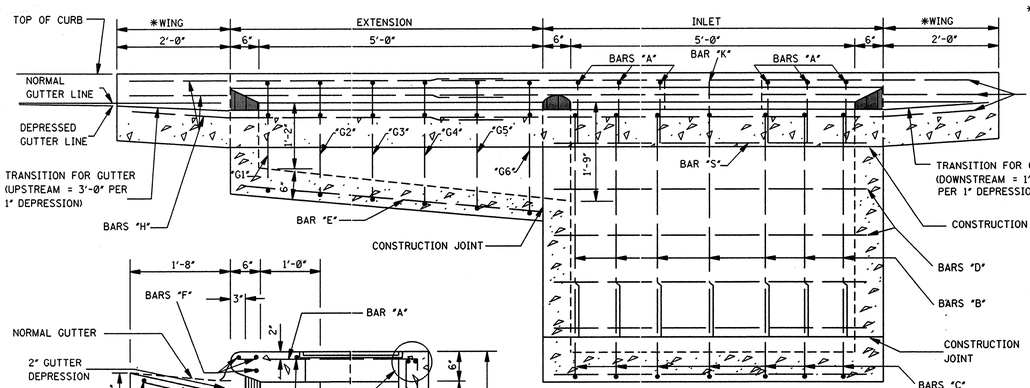

SECTION A–A

*NOTE: WING QUANTITIES ARE INCLUDED IN INLET QUANTITIES.

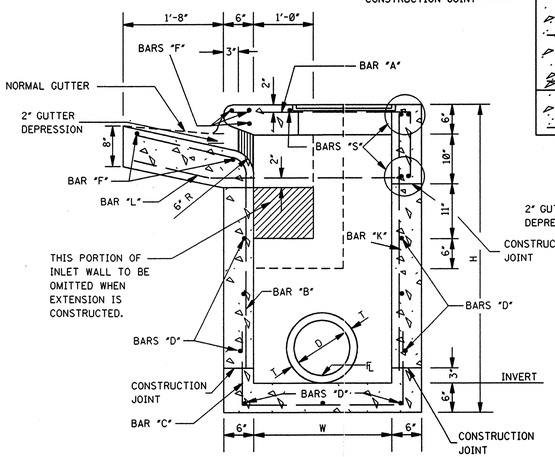

SECTION B–B

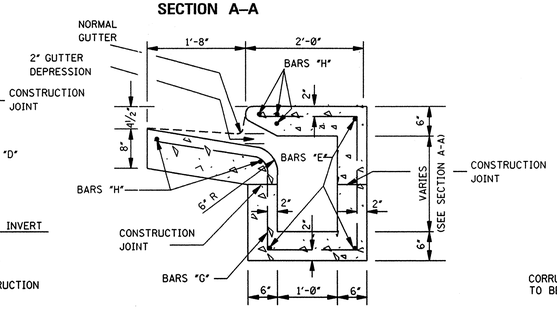

SECTION C–C

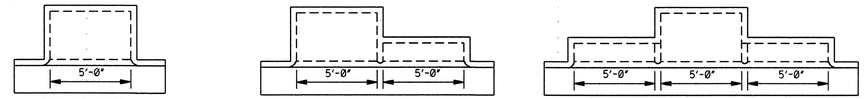

5'-0" INLET
STEEL = 8.68W + 9.35Y + 3.79W' + 7.57H' + 121
CONC. = (WY + 5.5W + 6Y + 14.611)/27

10'-0" INLET
STEEL = 8.68W + 9.35Y + 3.79W' + 7.57H' + 231
CONC. = (WY + 5.5W + 6Y + 38.641)/27

15'-0" INLET
STEEL = 8.68W + 9.35Y +3.79W' + 7.57H' +341
CONC = (WY + 5.5W + 6Y + 62.671)/27

PLAN OF INLET AND EXTENSIONS

NOTES:
1. W AND H ARE EXPRESSED IN DECIMAL FEET.
2. W' = W ROUNDED TO NEAREST WHOLE FOOT.
3. Y = (H-0.5).
4. H'= (H - 2.08) ROUNDED TO NEAREST WHOLE FOOT.
5. NO DEDUCTIONS ARE MADE FOR PIPE OPENINGS IN FORMULAS.

ADD. CONCRETE PER FOOT OF H		ADD. CONCRETE PER FOOT OF W	
W	yd³/ft	H	yd³/ft
2'-6"	0.315	3'-6"	0.315
3'-0"	0.333	4'-0"	0.333
3'-6"	0.352	4'-6"	0.352
4'-0"	0.371	5'-0"	0.370
4'-6"	0.389	5'-6"	0.389
5'-0"	0.408	6'-0"	0.408
5'-6"	0.426	6'-6"	0.426
6'-0"	0.445	7'-0"	0.445
6'-6"	0.463	7'-6"	0.463
7'-0"	0.481	8'-0"	0.482
		8'-6"	0.500

QUANTITIES FOR ONE EXTENSION					
BAR	SIZE	LENGTH	SPACING	NUMBER	†WEIGHT
"E"	#4	5'-8"	AS SHOWN	3	11
"G"	#4	SEE SCHEDULE	0'-11"	6	34
"H"	#6	6'-9"	AS SHOWN	5	51
"L"	#6	4'-9"	AS SHOWN	2	14
TOTAL STEEL FOR ONE EXTENSION = 110 lbs					
TOTAL CONCRETE FOR ONE EXTENSION = 0.89 yd³					

†NOTE: WHERE EXTENSION IS USED WITH CONCRETE PAVEMENT, ADD 27 lbs OF STEEL FOR BARS "M".

BAR "G" SCHEDULE	
BAR "G"	LENGTH
"G1"	7'-10"
"G2"	8'-0"
"G3"	8'-2"
"G4"	8'-5"
"G5"	8'-8"
"G6"	8'-10"

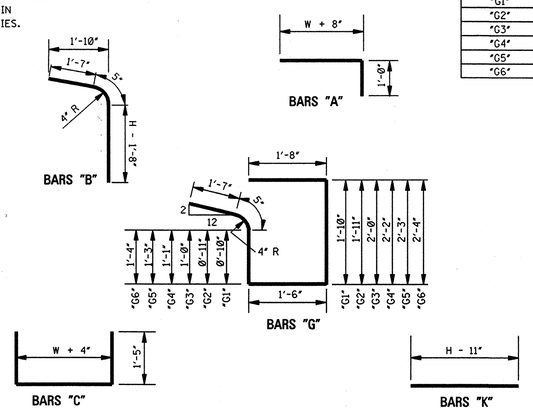

BAR DETAILS

W=2'-6"	BILL OF REINFORCING STEEL FOR 1-5'-0" INLET																	
H	BAR "A" L = 4'-2" #4 @ 9"		BAR "C" L = 5'-8" #4 @ 9"		BAR "S" L = 5'-8" #4 @ 12"		BAR "D" L = 5'-8" #4 @ 12"±		BAR "F" L=9'-8" #6		BAR "J" L=2'-3" #4		BAR "B" #4 @ 9"		BAR "K" #4 @ 9"±		*TOTAL STEEL	TOTAL CONC.
	NO.	lbs	NO.	lbs	NO.	lbs	NO.	lbs	NO.	lbs	NO.	lbs	LGTH.	NO.	LGTH.	NO.	lbs	lbs	yd³
3'-6"	6	17	7	27	5	19	5	19	5	73	4	6	3'-10"	7	18	2'-7"	7	12	190	1.99
4'-0"	6	17	7	27	5	19	7	26	5	73	4	6	4'-4"	7	20	3'-1"	7	14	202	2.15
4'-6"	6	17	7	27	5	19	7	26	5	73	4	6	4'-10"	7	23	3'-7"	7	17	207	2.31
5'-0"	6	17	7	27	5	19	9	34	5	73	4	6	5'-4"	7	25	4'-1"	7	19	219	2.47
5'-6"	6	17	7	27	5	19	9	34	5	73	4	6	5'-10"	7	27	4'-7"	7	21	224	2.62
6'-0"	6	17	7	27	5	19	11	42	5	73	4	6	6'-4"	7	30	5'-1"	7	24	238	2.78
6'-6"	6	17	7	27	5	19	11	42	5	73	4	6	6'-10"	7	32	5'-7"	7	26	240	2.94
7'-0"	6	17	7	27	5	19	13	49	5	73	4	6	7'-4"	7	34	6'-1"	7	28	253	3.10
7'-6"	6	17	7	27	5	19	13	49	5	73	4	6	7'-10"	7	37	6'-7"	7	31	257	3.25

W=3'-0"	BILL OF REINFORCING STEEL FOR 1-5'-0" INLET																	
H	BAR "A" L = 4'-8" #4 @ 9"		BAR "C" L = 6'-2" #4 @ 9"		BAR "S" L = 5'-8" #4 @ 12"		BAR "D" L = 5'-8" #4 @ 12"±		BAR "F" L=9'-8" #6		BAR "J" L=2'-3" #4		BAR "B" #4 @ 9"		BAR "K" #4 @ 9"±		*TOTAL STEEL	TOTAL CONC.
	NO.	lbs	NO.	lbs	NO.	lbs	NO.	lbs	NO.	lbs	NO.	lbs	LGTH.	NO.	LGTH.	NO.	lbs	lbs	yd³
3'-6"	6	19	7	29	5	19	5	19	5	73	4	6	3'-10"	7	18	2'-7"	7	12	194	2.15
4'-0"	6	19	7	29	5	19	7	26	5	73	4	6	4'-4"	7	20	3'-1"	7	14	206	2.32
4'-6"	6	19	7	29	5	19	7	26	5	73	4	6	4'-10"	7	23	3'-7"	7	17	211	2.49
5'-0"	6	19	7	29	5	19	9	34	5	73	4	6	5'-4"	7	25	4'-1"	7	19	223	2.65
5'-6"	6	19	7	29	5	19	9	34	5	73	4	6	5'-10"	7	27	4'-7"	7	21	228	2.82
6'-0"	6	19	7	29	5	19	11	42	5	73	4	6	6'-4"	7	30	5'-1"	7	24	240	2.99
6'-6"	6	19	7	29	5	19	11	42	5	73	4	6	6'-10"	7	32	5'-7"	7	26	245	3.15
7'-0"	6	19	7	29	5	19	13	49	5	73	4	6	7'-4"	7	34	6'-1"	7	28	257	3.32
7'-6"	6	19	7	29	5	19	13	49	5	73	4	6	7'-10"	7	37	6'-7"	7	31	262	3.49

W=3'-6"	BILL OF REINFORCING STEEL FOR 1-5'-0" INLET																	
H	BAR "A" L = 5'-2" #4 @ 9"		BAR "C" L = 6'-8" #4 @ 9"		BAR "S" L = 5'-8" #4 @ 12"		BAR "D" L = 5'-8" #4 @ 12"±		BAR "F" L=9'-8" #6		BAR "J" L=2'-3" #4		BAR "B" #4 @ 9"		BAR "K" #4 @ 9"±		*TOTAL STEEL	TOTAL CONC.
	NO.	lbs	NO.	lbs	NO.	lbs	NO.	lbs	NO.	lbs	NO.	lbs	LGTH.	NO.	LGTH.	NO.	lbs	lbs	yd³
3'-6"	6	21	7	31	5	19	6	23	5	73	4	6	3'-10"	7	18	2'-7"	7	12	202	2.31
4'-0"	6	21	7	31	5	19	8	30	5	73	4	6	4'-4"	7	20	3'-1"	7	14	214	2.49
4'-6"	6	21	7	31	5	19	8	30	5	73	4	6	4'-10"	7	23	3'-7"	7	17	219	2.66
5'-0"	6	21	7	31	5	19	10	38	5	73	4	6	5'-4"	7	25	4'-1"	7	19	231	2.84
5'-6"	6	21	7	31	5	19	10	38	5	73	4	6	5'-10"	7	27	4'-7"	7	21	236	3.01
6'-0"	6	21	7	31	5	19	12	45	5	73	4	6	6'-4"	7	30	5'-1"	7	24	248	3.19
6'-6"	6	21	7	31	5	19	12	45	5	73	4	6	6'-10"	7	32	5'-7"	7	26	253	3.37
7'-0"	6	21	7	31	5	19	14	53	5	73	4	6	7'-4"	7	34	6'-1"	7	28	265	3.54
7'-6"	6	21	7	31	5	19	14	53	5	73	4	6	7'-10"	7	37	6'-7"	7	31	270	3.72

* NOTE: WHERE INLET IS USED WITH CONCRETE PAVEMENT, ADD 73 lbs OF STEEL FOR BARS "M".

GENERAL NOTES:

1. WHERE INLET OR INLET WITH EXTENSION(S) IS USED WITH CONCRETE PAVEMENT WITH INTERGRAL CURB, THE PAVEMENT IS TO BE BLOCKED OUT TO THE DIMENSIONS AS SHOWN FOR THE GUTTER PORTION OF THE INLET OR INLET WITH EXTENSION(S). THE PORTION BLOCKED OUT SHALL BE PLACED INTEGRAL WITH THE TOP OF THE INLET OR INLET WITH EXTENSION(S). #8 DEFORMED BARS 30" LONG SHALL BE PLACED ON 18" CENTERS AT THE CENTER OF THE PAVEMENT. THESE BARS SHALL EXTEND INTO THE GUTTER PORTION OF THE INLET OR INLET WITH EXTENSION(S) 15". THE CONSTRUCTION JOINT BETWEEN THE CONCRETE PAVEMENT AND THE INLET OR INLET WITH EXTENSION(S) SHALL BE A KEYED JOINT AS SHOWN. A SMOOTH CONSTRUCTION JOINT WILL NOT BE PERMITTED. QUANTITIES FOR BLOCKED OUT AREA OF PAVEMENT SHALL BE INCLUDED IN QUANTITIES FOR INLET OR INLET WITH EXTENSION(S).
2. THE STANDARD SPECIFICATIONS ADOPTED BY THE MISSISSIPPI DEPARTMENT OF TRANSPORTATION SHALL APPLY TO ALL ITEMS ON THIS SHEET.
3. THE QUANTITIES SHOWN, MINUS VOLUMETRIC DISPLACEMENT OF CONCRETE BY PIPE CULVERTS THROUGH INLET WALLS, WILL BE USED AS THE BASIS OF FINAL PAYMENT UNLESS THIS PLAN IS MODIFIED.
4. FOR CONVENIENCE, DEPTHS OF INLETS SHOWN IN ABOVE TABLE ARE INCREMENTS OF 6". BUT ANY DEPTHS OTHER THAN THESE SHOWN MAY BE USED WHEREVER DEEMED NECESSARY. QUANTITIES FOR OTHER DEPTHS, FALLING WITHIN THE LIMITS OF THE TABLE, MAY BE FOUND BY INTERPOLATION.
5. FIELD CUT AND BEND BARS AS NECESSARY TO ACCOMMODATE STORM SEWER. NO DEDUCTIONS ARE TO BE MADE IN STEEL QUANTITIES.

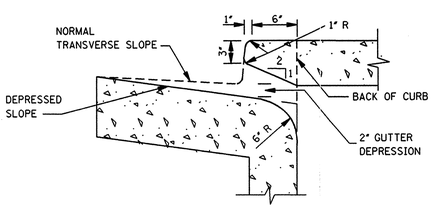

THROAT DETAIL OF BARRIER CURB

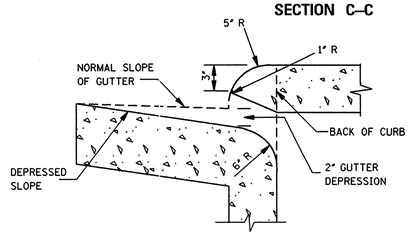

THROAT DETAIL OF ROLLED CURB

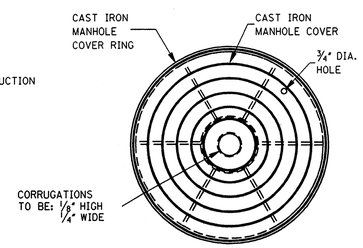

PLAN

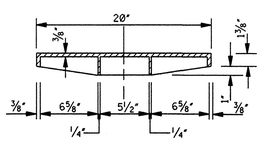

SECTION THRU MANHOLE COVER

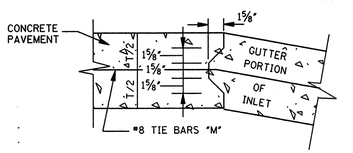

DETAIL OF KEYED CONSTRUCTION JOINTS
NOTE: FIELD BEND BARS "L" TO CENTER OF GUTTER SECTION

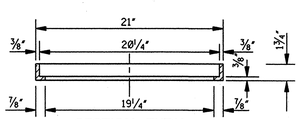

SECTION THRU MANHOLE COVER RING
NOTE: WEIGHT OF RING & COVER = 79 lbs

REVISION	BY
DATE	

MISSISSIPPI DEPARTMENT OF TRANSPORTATION
ROADWAY DESIGN DIVISION
STANDARD PLAN

STORM SEWER STRUCTURE TYPE SS-2

ENGLISH

WORKING NUMBER SS-2

ISSUE DATE: OCTOBER 1, 1998

SHEET NUMBER 322

STATE	PROJECT NO.
MISS.	

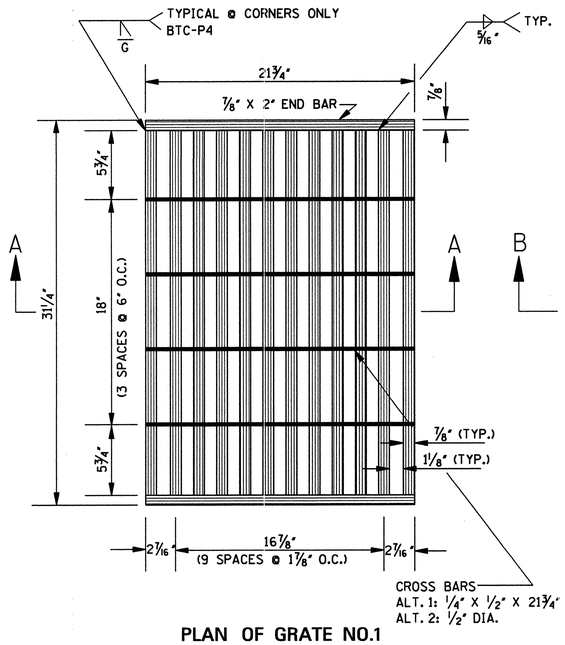

PLAN OF GRATE NO.1

NOTE: FOR OTHER GRATE DETAILS SEE SHEET IG-2.

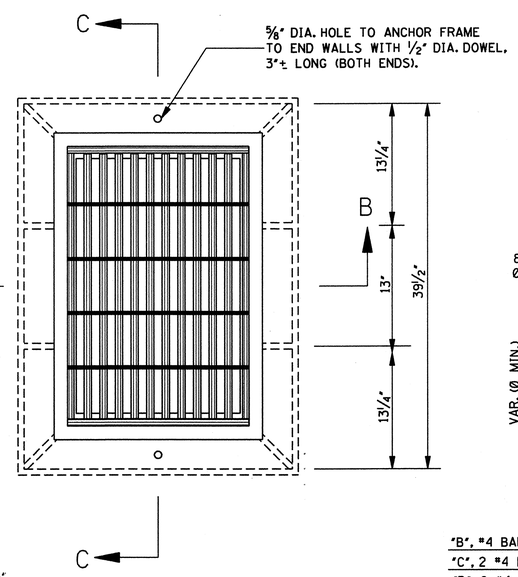

PLAN OF INLET

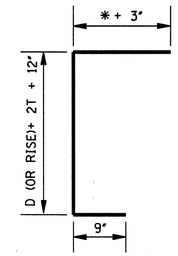

8 #4 BARS,
0.5[D(OR SPAN)+2D(OR RISE)+6T+38"] LONG

BARS "A"

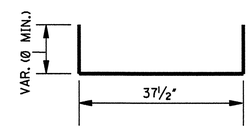

4 #4 BARS, VAR. LENGTH

BARS "U"

"B", #4 BARS	37 1/2"
"C", 2 #4 BARS	28"
"D", 6 #4 BARS	D (OR SPAN) + 2T + 18"

BARS "B", "C" & "D"

BAR DETAILS

*NOTE:

$$* \left[\frac{D\ (\text{OR SPAN}) + 2T - 10''}{2}\right]$$

QUANTITIES

PIPE SIZE	MIN. DEPTH TO F.L.	MIN. DEPTH INLET CONC. (yd³)	MIN. DEPTH INLET STEEL (lbs)	PIPE OPENING DEDUCTION (yd³)	T	BARS/SIZES "A" #4 NO. @ LGTH.	"B" #4 NO. @ LGTH.	"C" #4 NO. @ LGTH.	"D" #4 NO. @ LGTH.	"U" #4 NO. @ LGTH.
18"	2.792'	0.869	76	0.053	2 1/2"	8 @ 4'-5 1/2"	12 @ 3'- 1 1/2"	2 @ 2'-4"	6 @ 3'-5"	4 @ 3'-9 1/2"
24"	3.334'	1.117	87	0.091	3"	8 @ 5'-4"	14 @ 3'- 1 1/2"	2 @ 2'-4"	6 @ 4'-0"	4 @ 3'-9 1/2"
30"	3.875'	1.385	94	0.138	3 1/2"	8 @ 6'-2 1/2"	14 @ 3'- 1 1/2"	2 @ 2'-4"	6 @ 4'-7"	4 @ 3'-9 1/2"
36"	4.417'	1.671	105	0.196	4"	8 @ 7'-1"	16 @ 3'- 1 1/2"	2 @ 2'-4"	6 @ 5'-2"	4 @ 3'-9 1/2"
42"	4.959'	1.978	116	0.263	4 1/2"	8 @ 7'-11 1/2"	18 @ 3'- 1 1/2"	2 @ 2'-4"	6 @ 5'-9"	4 @ 3'-9 1/2"
48"	5.500'	2.305	123	0.340	5"	8 @ 8'-10"	18 @ 3'- 1 1/2"	2 @ 2'-4"	6 @ 6'-4"	4 @ 3'-9 1/2"
54"	6.042'	2.650	135	0.427	5 1/2"	8 @ 9'-8 1/2"	20 @ 3'- 1 1/2"	2 @ 2'-4"	6 @ 6'-11"	4 @ 3'-9 1/2"
60"	6.583'	3.016	146	0.524	6"	8 @ 10'-7"	22 @ 3'- 1 1/2"	2 @ 2'-4"	6 @ 7'-6"	4 @ 3'-9 1/2"
66"	7.125'	3.402	153	0.630	6 1/2"	8 @ 11'-5 1/2"	22 @ 3'- 1 1/2"	2 @ 2'-4"	6 @ 8'-1"	4 @ 3'-9 1/2"
72"	7.667'	3.806	164	0.747	7"	8 @ 12'-4"	24 @ 3'- 1 1/2"	2 @ 2'-4"	6 @ 8'-8"	4 @ 3'-9 1/2"
22" X 13"	2.417'	0.855	76	0.053	2 1/2"	8 @ 4'-3"	12 @ 3'- 1 1/2"	2 @ 2'-4"	6 @ 3'-9"	4 @ 3'-9 1/2"
29" X 18"	2.833'	1.085	83	0.087	3"	8 @ 5'-0 1/4"	12 @ 3'- 1 1/2"	2 @ 2'-4"	6 @ 4'-4 1/2"	4 @ 3'-9 1/2"
36" X 23"	3.250'	1.358	94	0.129	3 1/2"	8 @ 5'-10"	14 @ 3'- 1 1/2"	2 @ 2'-4"	6 @ 5'-1"	4 @ 3'-9 1/2"
44" X 27"	3.635'	1.631	101	0.185	4"	8 @ 6'-7 1/2"	14 @ 3'- 1 1/2"	2 @ 2'-4"	6 @ 5'-10"	4 @ 3'-9 1/2"
51" X 31"	4.068'	1.942	113	0.245	4 1/2"	8 @ 7'-5 1/2"	16 @ 3'- 1 1/2"	2 @ 2'-4"	6 @ 6'-6"	4 @ 3'-9 1/2"
58" X 36"	4.500'	2.269	120	0.318	5"	8 @ 8'-3"	16 @ 3'- 1 1/2"	2 @ 2'-4"	6 @ 7'-2 1/2"	4 @ 3'-9 1/2"
65" X 40"	4.875'	2.575	130	0.394	5 1/2"	8 @ 9'-0"	18 @ 3'- 1 1/2"	2 @ 2'-4"	6 @ 7'-10"	4 @ 3'-9 1/2"
73" X 45"	5.333'	2.966	139	0.489	6"	8 @ 9'-10 1/2"	18 @ 3'- 1 1/2"	2 @ 2'-4"	6 @ 8'-7"	4 @ 3'-9 1/2"
88" X 54"	6.167'	3.765	156	0.688	7"	8 @ 11'-6"	20 @ 3'- 1 1/2"	2 @ 2'-4"	6 @ 10'-0"	4 @ 3'-9 1/2"

NOTES:
1. ONE (1) PIPE OPENING HAS BEEN DEDUCTED FROM THE STRUCTURE.
2. FOR EACH ADDITIONAL FOOT OF INLET HEIGHT, ADD 0.184 yd³ CLASS "B" CONCRETE AND 17 lbs REINFORCING STEEL.
3. 4 BARS "B" AND 2 BARS "C" REQUIRED PER EACH ADDITIONAL FOOT OF INLET HEIGHT.
4. WEIGHT OF FRAME CASTING = 244 lbs.
   WEIGHT OF GRATE = SEE SHEET IG-2.

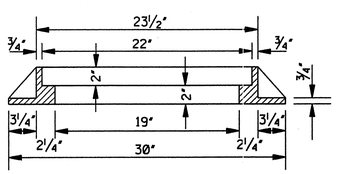

SECTION B–B
(FRAME)

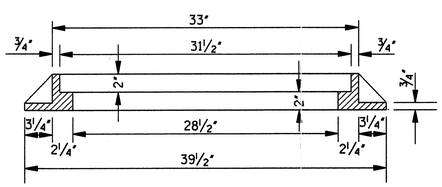

SECTION C–C
(FRAME)

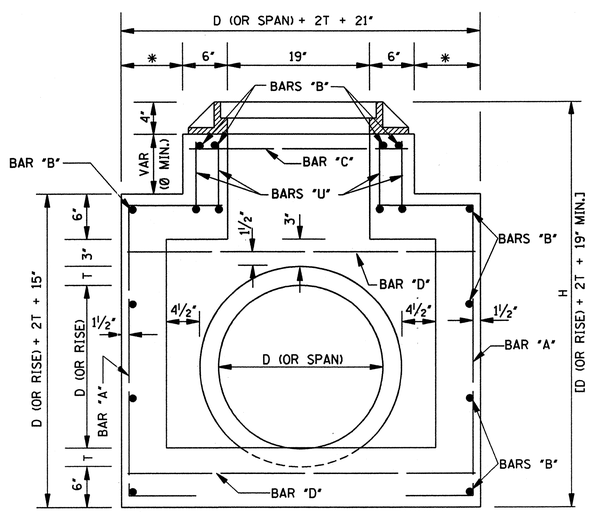

SECTION B–B

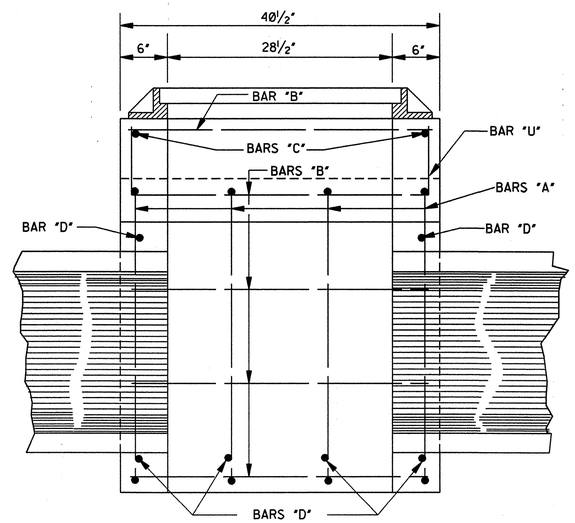

SECTION C–C

GENERAL NOTES:

1. QUANTITIES SHOWN WILL BE THE BASIS OF PAYMENT UNLESS AUTHORIZED MODIFICATIONS ARE MADE.
2. CONCRETE SHALL BE CLASS "B" CONCRETE AND REINFORCING STEEL SHALL BE DEFORMED BARS.
3. THE CONTRACTOR HAS THE OPTION TO PROVIDE GRATE NO. 1 OR GRATE NO. 2 AS SHOWN ON SHEET IG-2.
4. FRAME TO BE GRAY IRON CASTING, (AASHTO M 105, CLASS 30).

DATE	REVISION	BY

MISSISSIPPI DEPARTMENT OF TRANSPORTATION
ROADWAY DESIGN DIVISION
STANDARD PLAN

STORM SEWER INLET
TYPE SS–3

ENGLISH

WORKING NUMBER
SS-3

ISSUE DATE: OCTOBER 1, 1998

SHEET NUMBER
323

STATE	PROJECT NO.
MISS.	

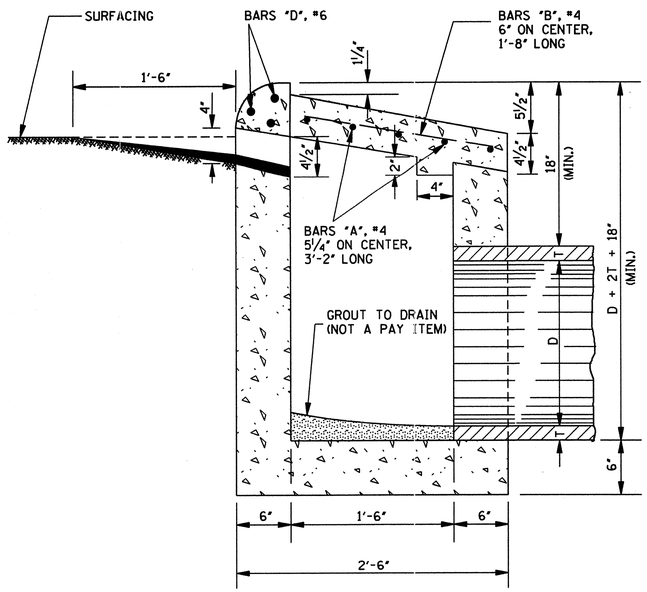

SECTION A–A

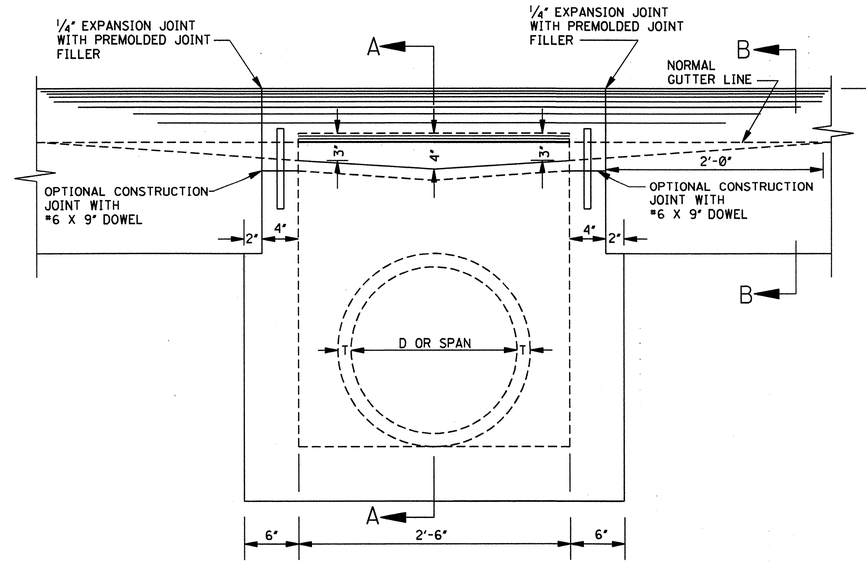

ELEVATION

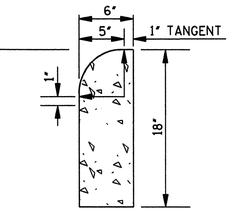

SECTION B–B

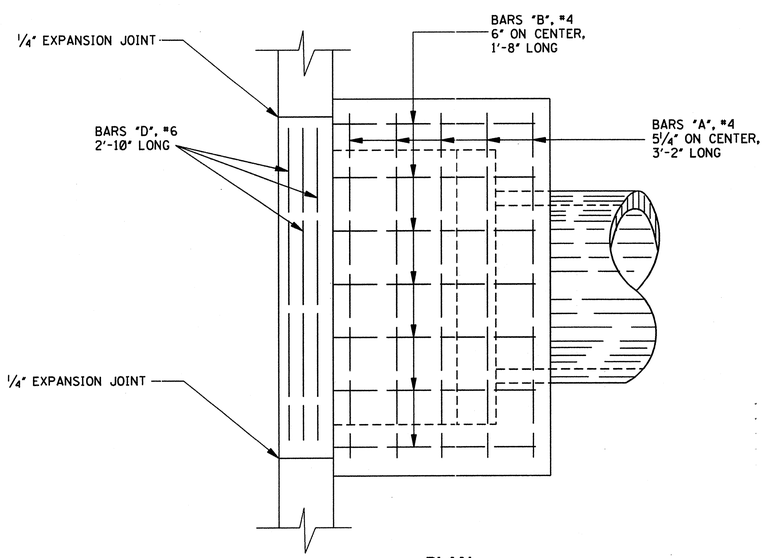

PLAN

PIPE SIZE	CLASS "B" CONCRETE (yd^3)	REINF. STEEL (lbs)	EXTRA CONC. EACH ADDED FOOT OF DEPTH (yd^3)
15"	0.64	31	0.185
18"	0.67	31	0.185
24"	0.74	31	0.185
22" X 13"	0.62	31	0.185

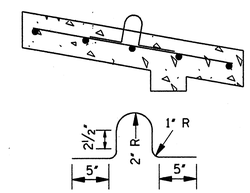

LIFT BAR - #4
OVERALL LENGTH = 26"
1 REQUIRED
COST OF LIFT BAR
TO BE ABSORBED

DETAIL SHOWING METHOD
OF LIFTING INLET COVER

GENERAL NOTES:

1. THE STANDARD SPECIFICATIONS ADOPTED BY THE MISSISSIPPI DEPARTMENT OF TRANSPORTATION, UNLESS OTHERWISE INDICATED HEREIN, SHALL APPLY TO ALL ITEMS INCLUDED ON THIS DRAWING.

2. QUANTITIES SHOWN SHALL BE THE BASIS FOR PAYMENT UNLESS AUTHORIZED MODIFICATIONS ARE MADE.

DATE	REVISION	BY

MISSISSIPPI DEPARTMENT OF TRANSPORTATION
ROADWAY DESIGN DIVISION
STANDARD PLAN

STORM SEWER STRUCTURE, TYPE SS–4 HEADER CURB

ENGLISH

WORKING NUMBER
SS-4

ISSUE DATE: OCTOBER 1, 1998

SHEET NUMBER
324

STATE	PROJECT NO.
MISS.	

"A", #4 BARS	AS PER TABLE
"B", #4 BARS	D (OR SPAN) +2T+9"
"C", #4 BARS	34"
"D", #4 BARS	D (OR RISE) +T+4"

BARS "A", "B", "C" & "D"

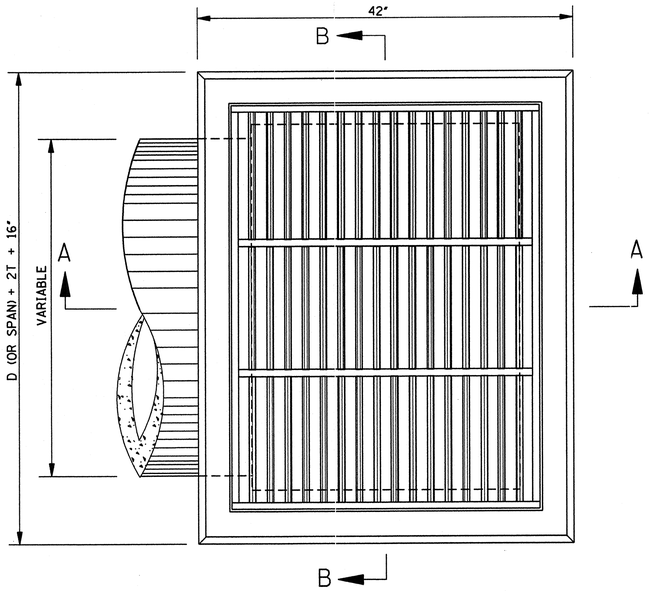

PLAN

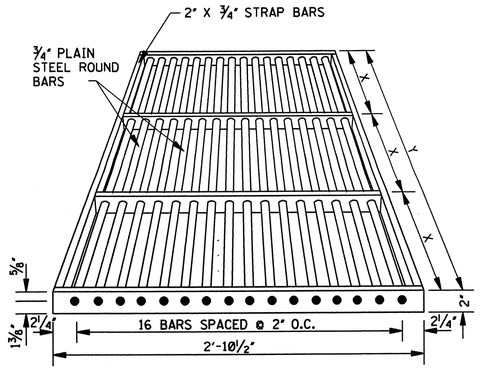

BAR GRATE DETAILS

NOTE: JUNCTIONS OF ROUND AND STRAP BARS SHALL BE WELDED. GRATE SHALL BE SHOP COATED WITH APPROVED COAL TAR PITCH VARNISH.

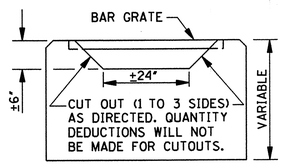

ELEVATION

MODIFIED PIPE OR BOX CULVERT INLET

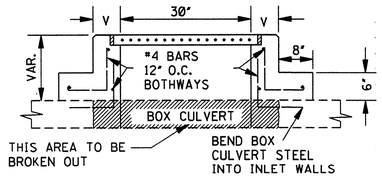

SECTION C–C

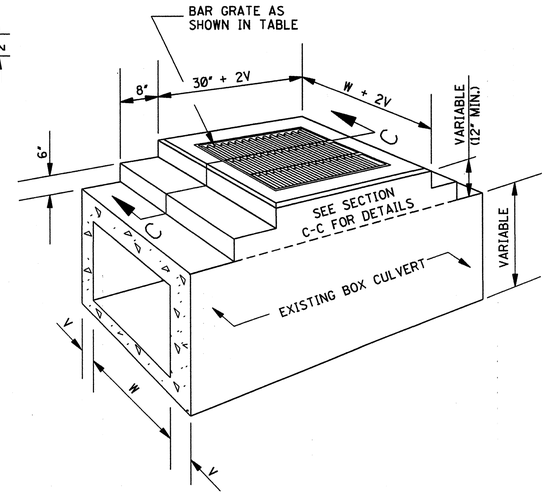

SECTIONAL PERSPECTIVE

INLET ON EXISTING BOX CULVERT

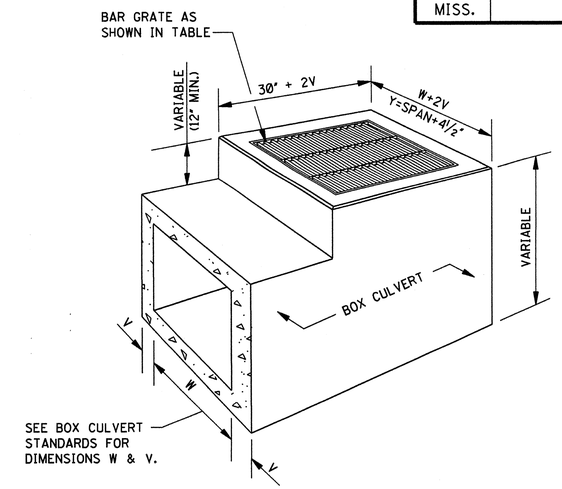

SECTIONAL PERSPECTIVE

INLET USED IN LIEU OF HEADWALLS

LENGTH AND WEIGHT OF GRATING

PIPE INLETS					BOX CULVERT INLETS				
PIPE SIZE	Y	X	NO. X-SPANS	WEIGHT (lbs)	BOX CULVERT SIZE	Y	X	NO. X-SPANS	WEIGHT (lbs)
18"	2'-7 1/2"	1'-3 3/4"	2	127	2' X 2'	2'-4 1/2"	1'-2 1/4"	2	119
22" X 13"	2'-11 1/2"	1'-5 3/4"	2	139	3' X 2'	3'-4 1/2"	1'-1 1/2"	3	166
24"	3'-2 1/2"	1'-7 1/4"	2	147	4' X 2'	4'-4 1/2"	1'-5 1/2"	3	200
29" X 18"	3'-7"	1'-2 11/32"	3	173	5' X 2'	5'-4 1/2"	1'-4 1/8"	4	247
30"	3'-9 1/2"	1'-3 5/32"	3	180	6' X 2'	6'-4 1/2"	1'-3 9/64"	5	293
36"	4'-4 1/2"	1'-5 1/2"	3	200	7' X 2'	7'-4 1/2"	1'-5 11/16"	5	328
42"	4'-11 1/2"	1'-2 1/8"	4	232	8' X 2'	8'-4 3/4"	1'-4 3/4"	6	374
48"	5'-6 1/2"	1'-4 5/8"	4	252	3' X 3'	3'-4 1/2"	1'-1 1/2"	3	166
54"	6'-1 1/2"	1'-6 3/8"	4	272	4' X 3'	4'-4 1/2"	1'-5 1/2"	3	200
60"	6'-8 1/2"	1'-4 7/32"	5	305	5' X 3'	5'-4 1/2"	1'-4 1/8"	4	247
					6' X 3'	6'-4 1/2"	1'-3 9/64"	5	293

QUANTITIES

PIPE SIZE	MIN. DEPTH TO F.L.	MIN. DEPTH INLET		EACH ADDED FOOT		PIPE OPENING DEDUCTION (yd^3)	T	BARS/SIZES			
		CONC* (yd^3)	STEEL (lbs)	CONC (yd^3)	STEEL (lbs)			"A" #4	"B" #4	"C" #4	"D" #4
								NO. @ LGTH.	NO. @ LGTH.	NO. @ LGTH.	NO. @ LGTH.
18"	2.209'	0.623	42	0.213	13	0.053	2 1/2"	2 @ 21"	8 @ 32"	7 @ 34"	9 @ 24 1/2"
22" X 13"	1.833'	0.586	42	0.225	14	0.053	2 1/2"	2 @ 25"	8 @ 36"	7 @ 34"	9 @ 20"
24"	2.750'	0.800	55	0.235	14	0.091	3"	2 @ 25"	9 @ 39"	9 @ 34"	9 @ 31"
29" X 18"	2.250'	0.742	57	0.248	16	0.087	3"	2 @ 30"	9 @ 43 1/2"	9 @ 34"	11 @ 25"
30"	3.292'	0.992	70	0.256	16	0.138	3 1/2"	2 @ 30"	9 @ 46"	11 @ 34"	11 @ 37 1/2"
36"	3.834'	1.198	85	0.278	17	0.196	4"	2 @ 33"	10 @ 53"	13 @ 34"	11 @ 44"
42"	4.375'	1.418	93	0.299	18	0.263	4 1/2"	2 @ 36"	10 @ 60"	13 @ 34"	11 @ 50 1/2"
48"	4.917'	1.653	109	0.321	19	0.340	5"	2 @ 39"	11 @ 67"	15 @ 34"	11 @ 57"
54"	5.458'	1.902	136	0.343	21	0.427	5 1/2"	2 @ 42"	12 @ 74"	19 @ 34"	13 @ 63 1/2"
60"	6.000'	2.165	146	0.364	21	0.524	6"	2 @ 47"	12 @ 81"	19 @ 34"	13 @ 70"

*NOTE: ONE (1) PIPE OPENING HAS BEEN DEDUCTED FROM THE STRUCTURE.

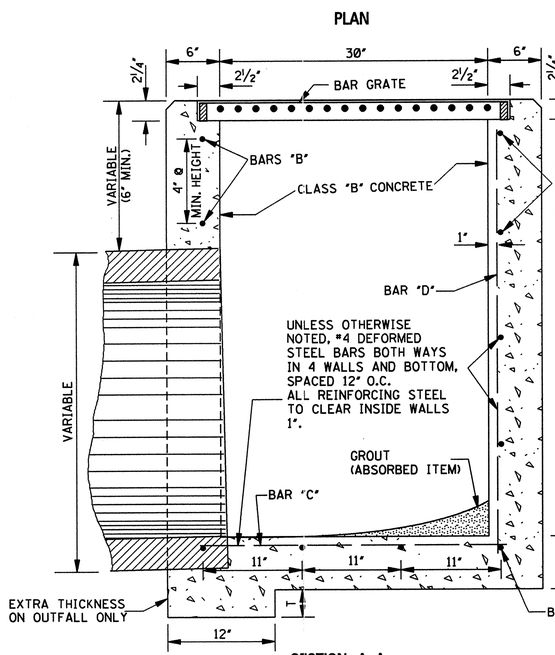

SECTION A–A

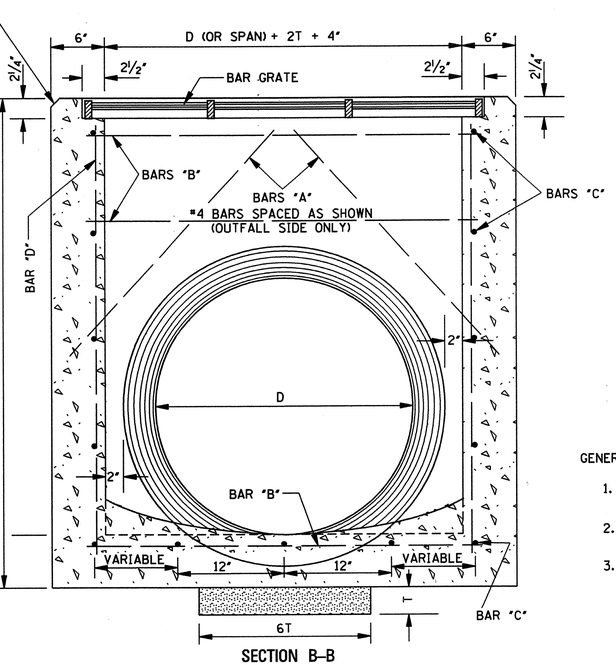

SECTION B–B

PIPE CULVERT INLET

GENERAL NOTES:

1. THE MDOT STANDARD SPECIFICATIONS SHALL APPLY TO ITEMS UNLESS OTHERWISE SPECIFIED.
2. QUANTITIES SHOWN WILL BE THE BASIS OF PAYMENT UNLESS AUTHORIZED MODIFICATIONS ARE MADE.
3. BOX CULVERTS:
   A. UNLESS OTHERWISE SHOWN, THE DETAILS OF THE BOX CULVERT INLETS SHALL CONFORM TO THOSE SHOWN FOR THE PIPE INLETS.
   B. BOX CULVERT REINFORCEMENT SHALL BE CONTINUED AND RESHAPED TO ACCOMMODATE THE INLET BOX. ADDITIONAL BARS SHALL BE THE SAME DIAMETER AS THOSE IN THE BOX CULVERT AND THE CONCRETE SHALL BE THE SAME. QUANTITIES ARE TO BE COMPUTED IN CONJUNCTION WITH QUANTITIES FOR BOX CULVERT.

DATE	REVISION	BY

MISSISSIPPI DEPARTMENT OF TRANSPORTATION
ROADWAY DESIGN DIVISION
STANDARD PLAN

DROP INLET AND GRATE DETAILS FOR PIPE AND BOX CULVERTS

ENGLISH

WORKING NUMBER B-9

ISSUE DATE: OCTOBER 1, 1998

SHEET NUMBER 325

STATE	PROJECT NO.
MISS.	

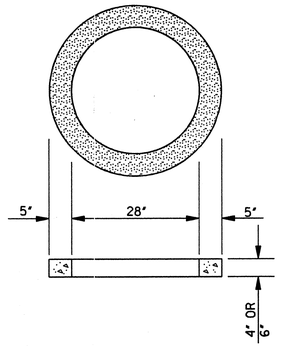

ADJUSTING RING

NOTE: ADJUSTING RING IS NOT A PAY ITEM. IF USED TO ADJUST MANHOLE HEIGHT, COST TO BE ABSORBED IN UNIT PRICE BID FOR ADJUSTMENT OF CASTING.

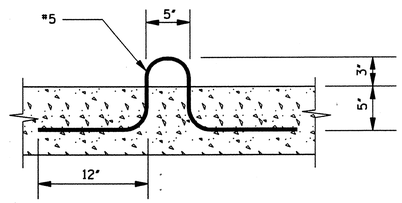

LIFT BAR DETAIL

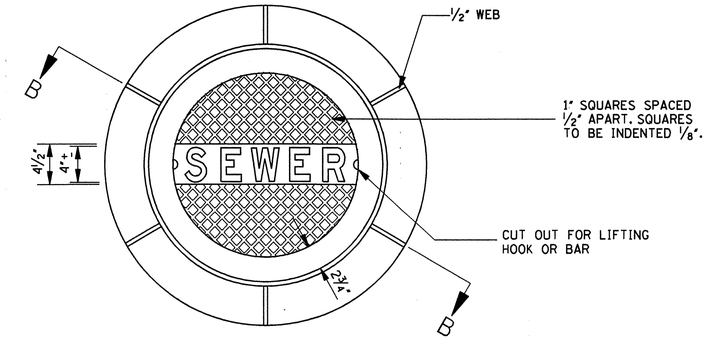

PLAN

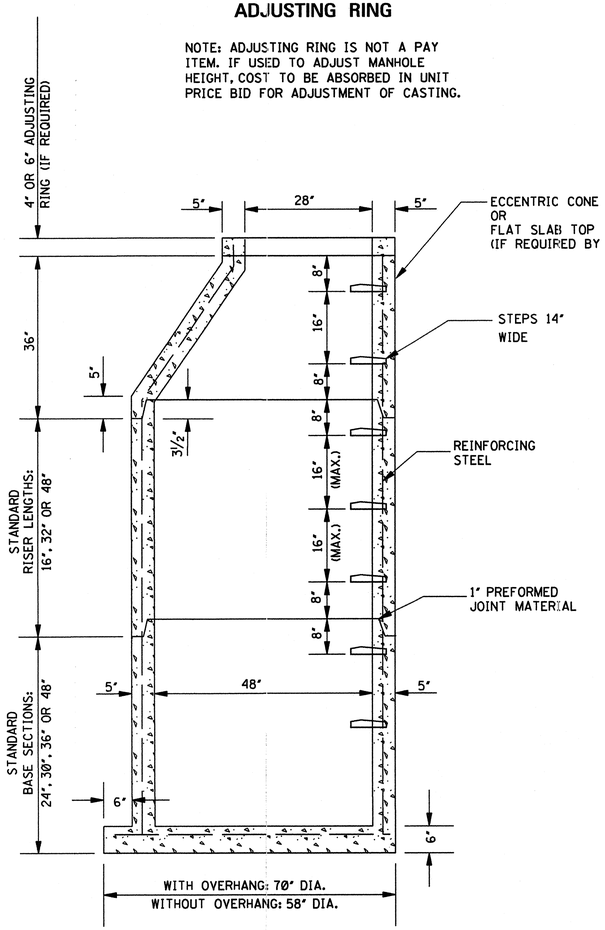

48" PRECAST CONCRETE MANHOLE

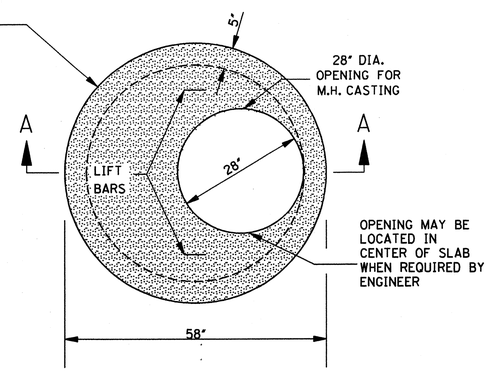

PLAN

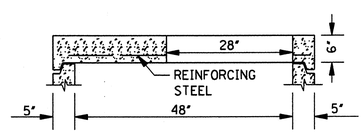

SECTION A–A

FLAT SLAB MANHOLE TOP

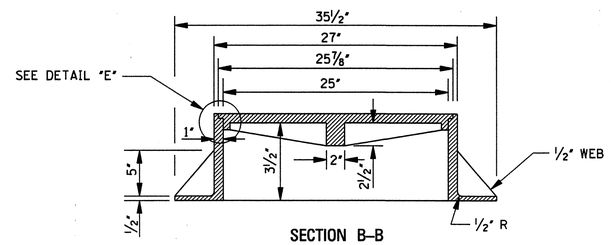

SECTION B–B

FRAME AND COVER CASTING

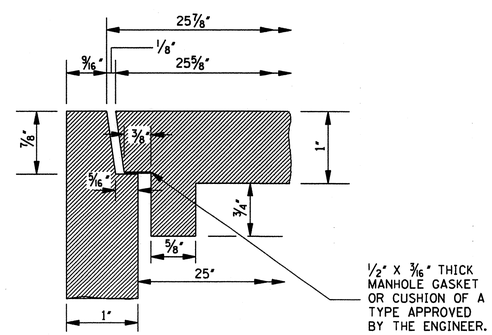

DETAIL "E"

GENERAL NOTES:

1. THE MISSISSIPPI DEPARTMENT OF TRANSPORTATION STANDARD SPECIFICATIONS SHALL APPLY TO ALL ITEMS INCLUDED ON SHEET UNLESS OTHERWISE SPECIFIED.
2. ALL CONCRETE MANHOLE COMPONENTS SHALL COMPLY WITH ASTM C-478.
3. CASTINGS SHALL BE PLACED ON A MORTAR SEAT THAT IS 1/2" THICK.
4. THE FOLLOWING TABLE DEPICTS THE WEIGHT OF INDIVIDUAL MANHOLE COMPONENTS:

WEIGHT OF MANHOLE COMPONENTS				
*FRAME AND COVER CASTING = 550 lbs				
ADJUSTING RING				
THICKNESS OF RING (in)	4"	6"		
WEIGHT (lbs)	180	270		
ECCENTRIC CONE SECTION = 2025 lbs				
FLAT SLAB TOP = 1057 lbs				
RISER SECTION = 888 lbs/ft				
BASE SECTION				
LENGTH OF BASE SECTION (in)	24"	32"	40"	48"
WEIGHT W/ OVERHANG (lbs)	3354	3946	4538	5130
WEIGHT W/O OVERHANG (lbs)	2726	3321	3910	4502

*NOTE: THIS WEIGHT IS THE COMPUTED WEIGHT OF THE CASTING PLUS THE 5% ALLOWED FOR FILLETS AND OVERRUNS AND SHALL BE THE BASIS FOR PAYMENT.

DATE	REVISION	BY

MISSISSIPPI DEPARTMENT OF TRANSPORTATION
ROADWAY DESIGN DIVISION
STANDARD PLAN

STORM SEWER STRUCTURE, MANHOLE
(PRECAST)

ENGLISH

WORKING NUMBER MH-1

ISSUE DATE: OCTOBER 1, 1998

SHEET NUMBER 326

STATE	PROJECT NO.
MISS.	

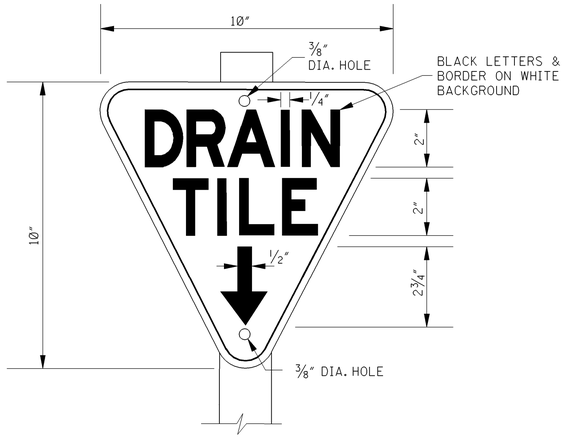

MARKER

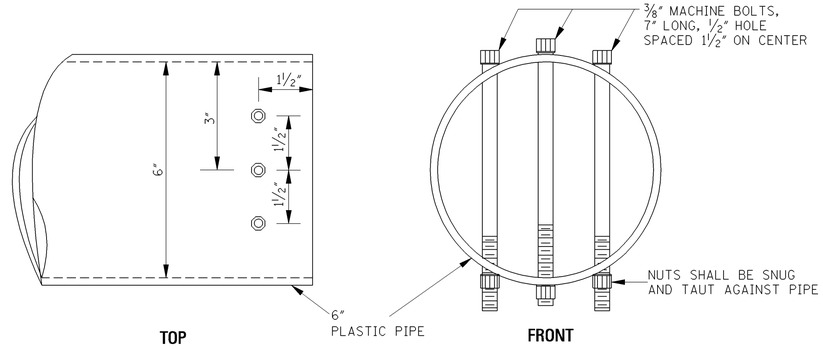

SMALL ANIMAL GUARD – ALTERNATE I

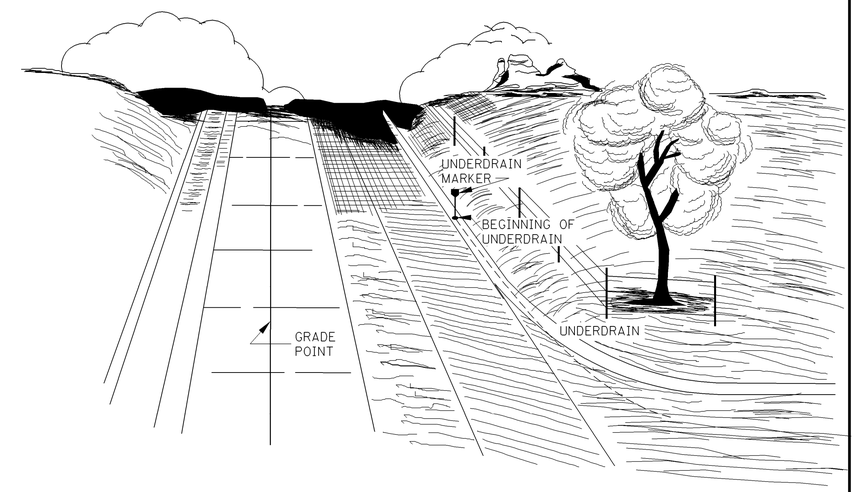

LOCATION OF UNDERDRAIN MARKER

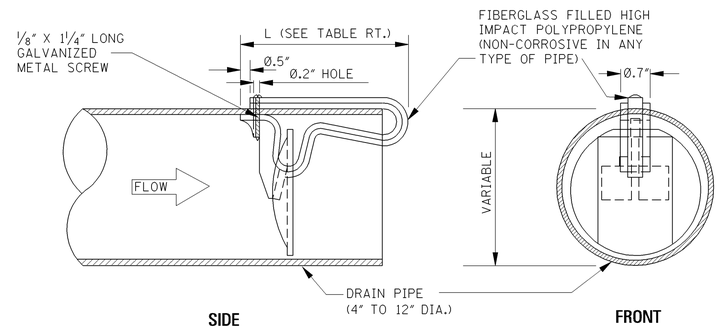

FOR UNDERDRAINS 4" TO 12" IN DIAMETER

DIA. OF UNDERDRAIN	L
4"	3"
5"	3"
6"	4.75"
8"	4.75"
10"	9.50"
12"	9.50"

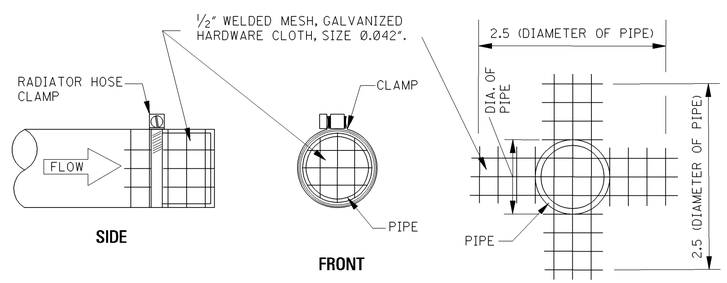

FOR UNDERDRAINS LESS THAN 4" IN DIAMETER

SMALL ANIMAL GUARD – ALTERNATE II

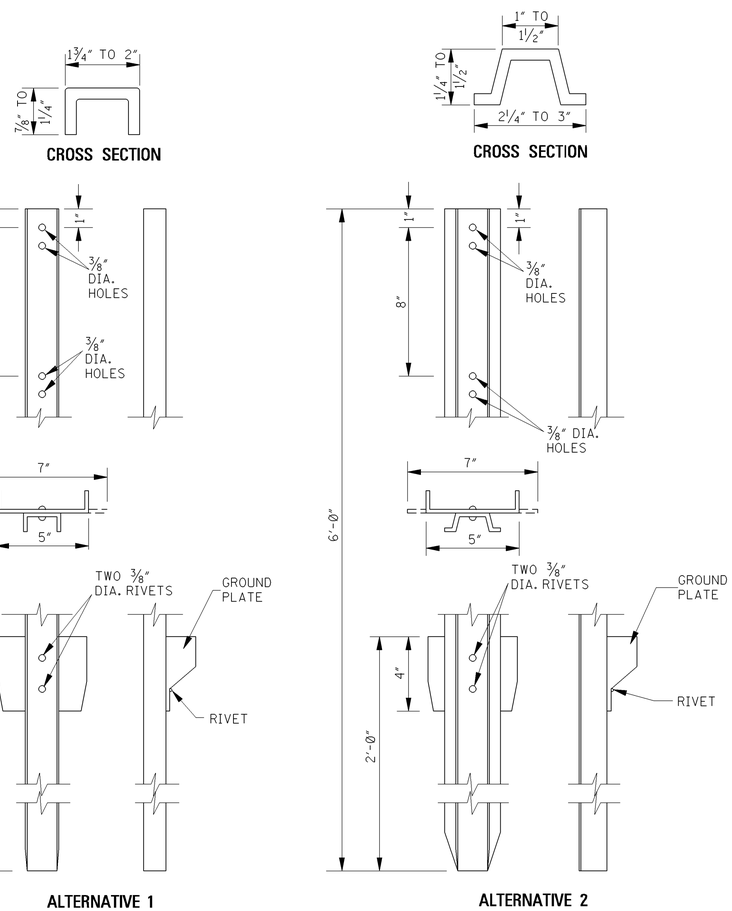

METAL POST

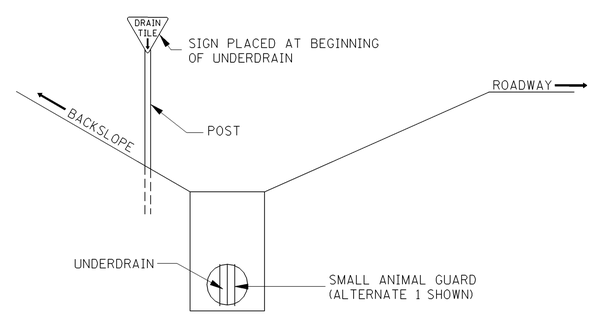

CROSS SECTION OF UNDERDRAIN

GENERAL NOTES:

1. MARKER IS TO BE FASTENED TO POST WITH 5/16" HUCK FASTENERS OR CHERRY RIVETS OF THE COLLAR TYPE OF OTHER APPROVED EQUAL.
2. MARKER FACE SHALL BE 0.080" ALUMINUM SHEET OR 14 GAGE SHEET STEEL WHICH IS GALVANIZED.
3. POSTS SHALL BE GALVANIZED AS SPECIFIED BY SECTION 630 OF THE MDOT STANDARD SPECIFICATIONS.
4. POSTS SHALL BE 2.0 lbs/ft TO 2.5 lbs/ft.
5. PAYMENT FOR INSTALLED DRAIN TILE MARKERS AND SMALL ANIMAL GUARDS ARE TO BE ABSORBED IN THE PRICE FOR PIPE UNDERDRAINS.
6. BOLTS, NUTS, WASHERS AND HARDWARE CLOTH SHALL BE ZINC COATED BY THE MECHANICAL OR HOT DIP GALVANIZING PROCESS.
7. ⚠ ANIMAL GUARD AND SIGN TO BE PLACED IMMEDIATELY AFTER PIPE INSTALLATION

DATE	REVISION	BY
3-01-02	ADDED NOTE	S.W.R.

MISSISSIPPI DEPARTMENT OF TRANSPORTATION
ROADWAY DESIGN DIVISION
STANDARD PLAN

SMALL ANIMAL GUARD AND UNDERDRAIN MARKER

ENGLISH

WORKING NUMBER SAG-1

ISSUE DATE: OCTOBER 1, 1998

SHEET NUMBER 327

STATE	PROJECT NO.
MISS.	

BELL AND SPIGOT END OPTION

NOTE: BELL-END ON DOWNSTREAM SECTION
SPIGOT-END ON UPSTREAM SECTION.

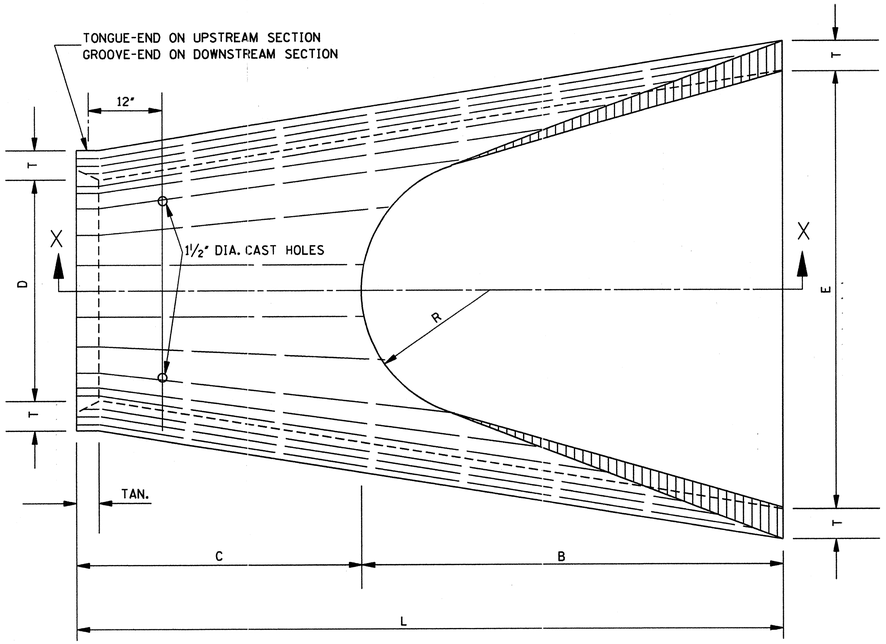

PLAN OF DOWNSTREAM END

TABLE OF DIMENSIONS								
	D	T	H:V	A	B	C	E	L
	15"	2¼"	3:1	6"	2'-3"	4'-1"	2'-8"	6'-1"
	18"	2½"	3:1	9"	2'-3"	3'-10"	3'-0"	6'-1"
	24"	3"	3:1	10"	3'-8"	2'-6"	4'-0"	6'-2"
	30"	3½"	3:1	1'-0"	4'-6"	1'-8"	5'-0"	6'-2"
	36"	4"	3:1	1'-3"	5'-3"	2'-11"	6'-0"	8'-2"
	42"	4½"	3:1	1'-9"	5'-3"	2'-11"	6'-6"	8'-2"
	48"	5"	3:1	2'-0"	6'-0"	2'-2"	7'-0"	8'-2"
	54"	5½"	3:1	2'-4"	6'-6"	1'-10"	7'-6"	8'-4"
*	60"	6"	3:1	2'-10"	6'-6"	1'-10"	8'-0"	8'-4"
*	66"	6½"	3:1	3'-4"	6'-6"	1'-10"	8'-6"	8'-4"
*	72"	7"	3:1	3'-10"	6'-6"	1'-10"	9'-0"	8'-4"

* NOTE: SEE GENERAL NOTE 2.

TOE WALL CONC. QUANTITY (yd^3)
0.056
0.063
0.083
0.102
0.123
0.134
0.145
0.156
0.167
0.177
0.188

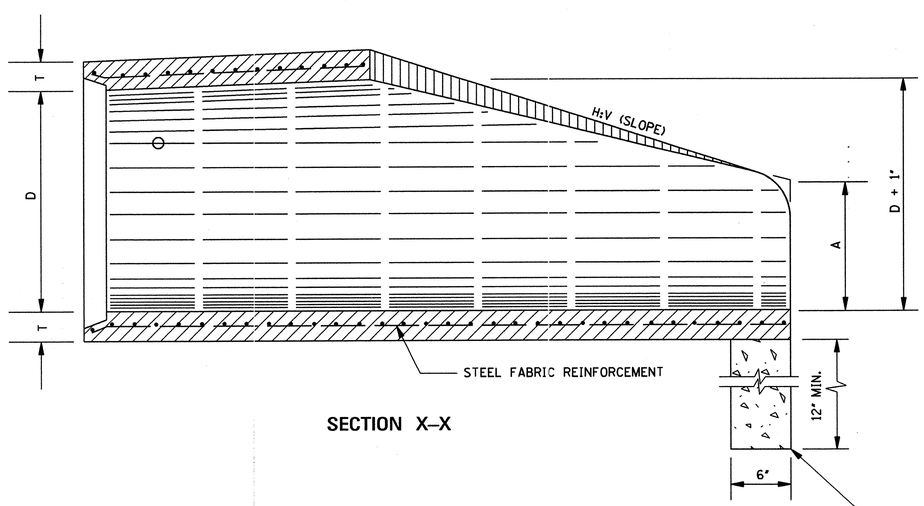

SECTION X–X

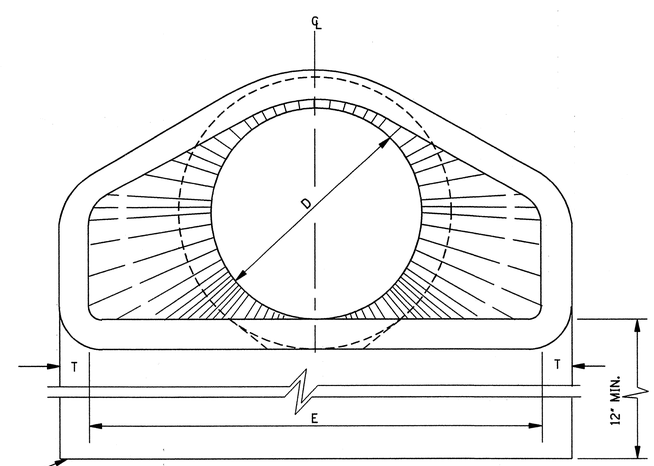

END ELEVATION

TOE WALL REQUIRED ON ALL DOWNSTREAM FLARED END SECTIONS. TOE WALL AT UPSTREAM END WILL BE CONSTRUCTED WHERE DIRECTED BY THE ENGINEER. TO BE PAID FOR AS CLASS "B" STRUCTURAL CONCRETE - MINOR STRUCTURES.

GENERAL NOTES:

1. REINFORCEMENT SHALL CONFORM TO THE REQUIREMENTS OF REINFORCED CONCRETE PIPE OF LIKE DIAMETER PER AASHTO M 170, TABLE 2, WALL B.
2. 2 - 1½" DIA. CAST HOLES REQUIRED AS SHOWN TO ACCOMMODATE 2 - 1" DIA. TIE BOLTS, USED IN TIEING SECTION TO PIPE CULVERT.
3. LENGTH (L) OF A BELL-END OPTION MAY VARY BY A NOMINAL EXTENSION ON THE BELL END.
4. FLARED END SECTIONS ARE NOT TO BE USED INSIDE THE CLEAR ZONE.
5. ALL SIZES OF FLARED END SECTIONS FOR CIRCULAR CONCRETE PIPE MAY BE FURNISHED WITH EITHER BELL AND SPIGOT OR TONGUE AND GROOVE ENDS.

DATE	REVISION	BY

MISSISSIPPI DEPARTMENT OF TRANSPORTATION
ROADWAY DESIGN DIVISION
STANDARD PLAN

FLARED END SECTION FOR CONCRETE PIPE

ENGLISH

WORKING NUMBER FE-1

ISSUE DATE: OCTOBER 1, 1998

SHEET NUMBER 328

BELL AND SPIGOT END OPTION TYPE I

NOTE: BELL-END ON DOWNSTREAM SECTION
SPIGOT-END ON UPSTREAM SECTION.

FLARED END SECTION FOR CONCRETE ARCH PIPE									
EQUIV. SIZE	R	S	T	H:V	A	B	C	E	L
18"	13½"	22"	2½"	3:1	7"	2'-3"	3'-9"	3'-0"	6'-0"
24"	18"	28½"	3"	3:1	8"	3'-3"	2'-9"	4'-0"	6'-0"
30"	22½"	36¼"	3½"	3:1	10"	4'-0"	2'-0"	5'-0"	6'-0"
36"	26⅝"	43¾"	4"	3:1	10⅝"	5'-0"	3'-0"	6'-0"	8'-0"
42"	31 5/16"	51⅛"	4½"	3:1	1'-3 11/16"	5'-0"	3'-0"	6'-6"	8'-0"
48"	36"	58½"	5"	3:1	1'-9"	5'-0"	3'-0"	7'-0"	8'-0"
54"	40"	65"	5½"	3:1	2'-1½"	5'-0"	3'-0"	7'-6"	8'-0"
60"	45"	73"	6"	3:1	2'-2"	6'-3"	1'-9"	8'-0"	8'-0"
72"	54"	88"	7"	3:1	2'-11"	6'-6"	1'-10"	10'-0"	8'-4"

TOE WALL CONC. QUANTITY (yd^3)
0.063
0.083
0.102
0.123
0.134
0.145
0.156
0.167
0.207

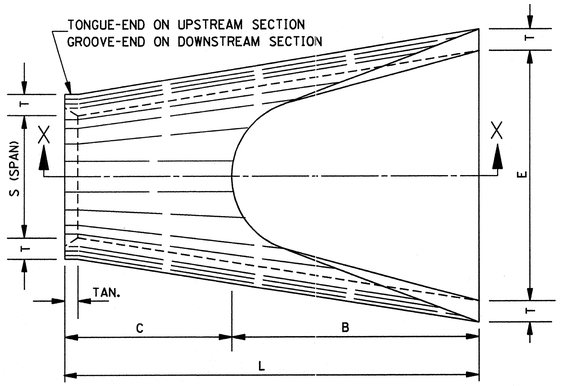

PLAN OF DOWNSTREAM END

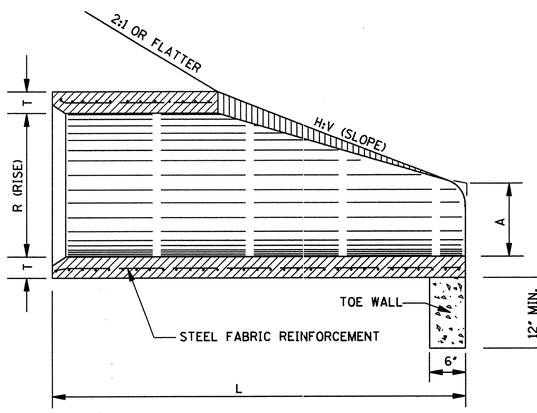

SECTION X–X

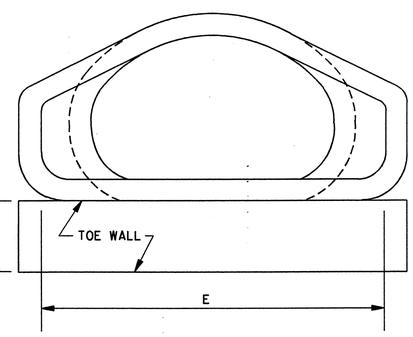

FRONT ELEVATION

BELL AND SPIGOT END OPTION TYPE II

STATE	PROJECT NO.
MISS.	

NOTE: BELL-END ON DOWNSTREAM SECTION
SPIGOT-END ON UPSTREAM SECTION.

FLARED END SECTION FOR CONC. ARCH PIPE-SHORT FLARE										
EQUIV. SIZE	R	S	T	H:V	A	B	C	E	L	GROOVE TONGUE
* 18"	13½"	22"	2½"	3:1	7"	2'-3"	3'-9"	3'-0"	6'-0"	2¼"
24"	18"	28½"	3½"	3.12:1	9"	3'-3"	2'-9½"	4'-0"	6'-0½"	3"
30"	22½"	36¼"	4"	2.94:1	9½"	4'-2"	3'-10½"	5'-0"	8'-0½"	3½"
36"	26⅝"	43¾"	4½"	3.08:1	11⅝"	5'-0"	3'-0½"	6'-0"	8'-0½"	4"
42"	31 5/16"	51⅛"	4½"	3.08:1	1'-4 5/16"	5'-0"	3'-0½"	6'-6"	8'-0½"	4"
48"	36"	58½"	5"	3.16:1	1'-10"	5'-0"	3'-0½"	7'-0"	8'-0½"	5"
54"	40"	65"	5½"	3.24:1	2'-3"	5'-0"	3'-0⅝"	7'-6"	8'-0⅝"	5"
60"	45"	73"	6"	3.33:1	2'-9"	5'-0"	3'-0⅝"	8'-0"	8'-0⅝"	5"

TOE WALL CONC. QUANTITY (yd^3)
0.063
0.083
0.102
0.123
0.134
0.145
0.156
0.167

NOTES: *1. EQUIVALENT 18" FLARED END SECTION SIMILAR TO TYPE I.
2. DIMENSIONS A, B, C, E AND L MAY VARY 1"±.

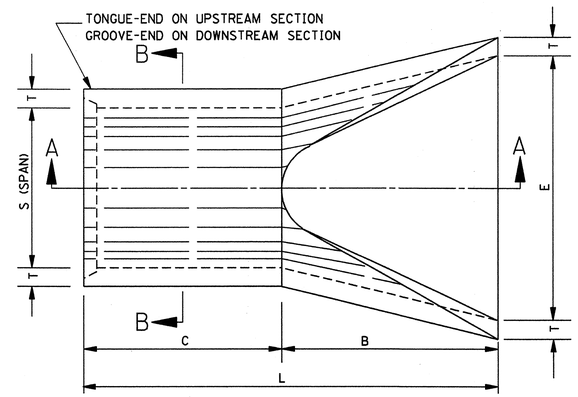

PLAN OF DOWNSTREAM END

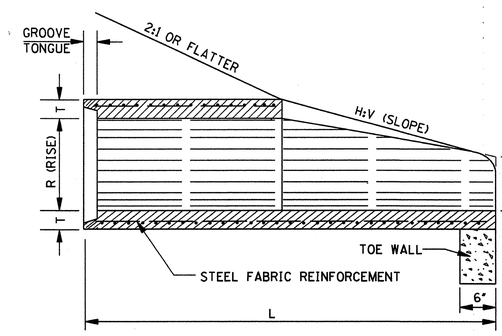

SECTION A–A

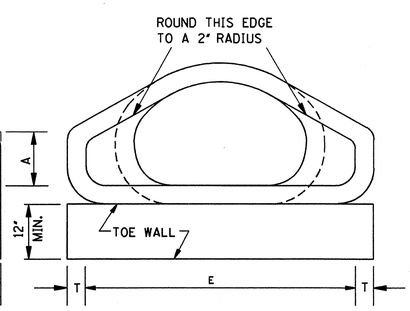

FRONT ELEVATION

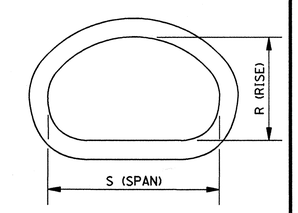

SECTION B–B

GENERAL NOTES:

1. FLARED END SECTIONS ARE NOT TO BE USED INSIDE THE CLEAR ZONE.
2. UNLESS OTHERWISE DESIGNATED, EITHER TYPE I OR TYPE II MAY BE USED, PROVIDED THE SELECTED TYPE IS COMPATIBLE WITH THE CONFIGURATION OF THE PIPE TO WHICH IT IS TO BE ATTACHED.
3. ALL SIZES OF TYPE I AND TYPE II FLARED END SECTIONS FOR CONCRETE ARCH PIPE MAY BE FURNISHED WITH EITHER BELL AND SPIGOT OR TONGUE AND GROOVE ENDS.
4. REINFORCEMENT (SINGLE LINE) FOR FLARED END SECTION SHALL CONFORM TO REQUIREMENTS OF AASHTO M 206 FOR CLASS II ARCH PIPE.
5. TOE WALL REQUIRED ON ALL DOWNSTREAM FLARED END SECTIONS. TOE WALL AT UPSTREAM END WILL BE CONSTRUCTED WHERE DIRECTED BY THE ENGINEER. TO BE PAID FOR AS CLASS "B" STRUCTURAL CONCRETE-MINOR STRUCTURES.
6. FLARED END SECTIONS MUST MEET THE REQUIREMENTS FOR ARCH PIPE OF EITHER AASHTO M 206 OR ASTM C 506.

DATE	REVISION	BY

MISSISSIPPI DEPARTMENT OF TRANSPORTATION
ROADWAY DESIGN DIVISION
STANDARD PLAN

FLARED END SECTION FOR CONCRETE ARCH PIPE

DEPARTMENT OF TRANSPORTATION ENGLISH MISSISSIPPI

WORKING NUMBER FE-1A

ISSUE DATE: OCTOBER 1, 1998

SHEET NUMBER 329

STATE	PROJECT NO.
MISS.	

METAL ARCH PIPE

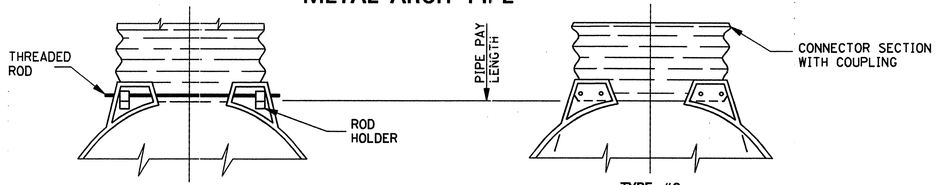

TYPE #2
NOTE: FOR 17" X 13" THROUGH 57" X 38" ONLY.

TYPE #3
NOTE: FOR 64" X 43" THROUGH 83" X 57".

STANDARD CONNECTIONS

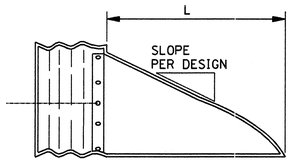

CROSS-SECTION
NOTE: TYPICAL CROSS SECTION WITH #3 CONNECTION.

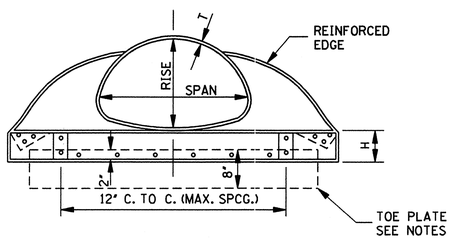

FRONT
TYPICAL ELEVATION

DESIGN I									
PIPE ARCH (In)		T GAGE	DIMENSIONS (In)					APPROX. SLOPE	BODY
SPAN	RISE		A±1"	B (MAX.)	H±1"	L±1½"	W±2"		
17"	13"	16	7"	9"	6"	19"	30"	2.50	1 PC.
21"	15"	16	7"	10"	6"	23"	36"	2.50	1 PC.
24"	18"	16	8"	12"	6"	28"	42"	2.50	1 PC.
28"	20"	16	9"	14"	6"	32"	48"	2.50	1 PC.
35"	24"	14	10"	16"	6"	39"	60"	2.50	1 PC.
42"	29"	14	12"	18"	8"	46"	75"	2.50	1 PC.
49"	33"	12	13"	21"	9"	53"	85"	2.50	2 PC.
57"	38"	12	18"	26"	12"	63"	90"	2.50	2 PC.
64"	43"	12	18"	30"	12"	70"	102"	2.25	2 PC.
71"	47"	12 *	18"	33"	12"	77"	114"	2.25	3 PC.
77"	52"	12 *	18"	36"	12"	77"	126"	2.00	3 PC.
83"	57"	12 *	18"	39"	12"	77"	138"	2.00	3 PC.

* NOTE: CENTER PANEL TO BE 10 GAGE.

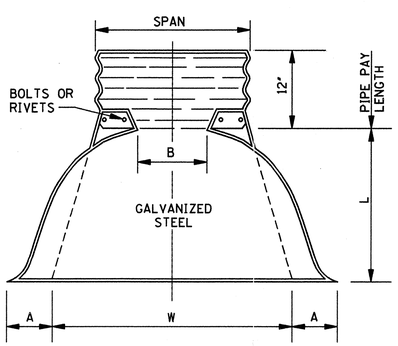

TYPICAL PLAN

DESIGN II								
PIPE ARCH (In)		T GAGE	DIMENSIONS (In)					APPROX. SLOPE
SPAN	RISE		A±1"	B(MAX.)	H±1"	L±1½"	W±2"	
17"	13"	16	4½"	9"	6"	19"	30"	2.50
21"	15"	16	5¼"	10"	6"	23"	36"	2.50
24"	18"	16	6¼"	11½"	6"	28"	42"	2.50
28"	20"	16	7"	14"	6"	31½"	48"	2.50
35"	24"	14	8¾"	16"	6"	38½"	60"	2.50
42"	29"	14	10¾"	17½"	7⅝"	47"	75"	2.50
49"	33"	12	12¼"	20"	9⅛"	54"	85"	2.50
57"	38"	12	14"	26"	10⅝"	63"	96"	2.50
64"	43"	12	15¾"	27"	10⅝"	70"	112"	2.50
71"	47"	12	17¼"	28"	12⅛"	77"	128"	2.50

METAL PIPE

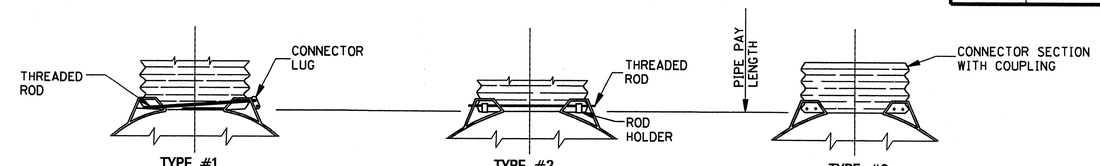

TYPE #1
NOTE: FOR 12" THROUGH 24" ONLY.

TYPE #2
NOTE: FOR 30" THROUGH 36" ONLY.

TYPE #3
NOTE: FOR 42" THROUGH 84" ONLY.

STANDARD CONNECTIONS

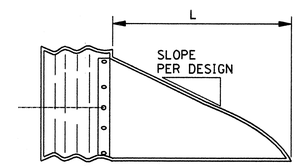

CROSS-SECTION
NOTE: TYPICAL CROSS SECTION WITH #3 CONNECTION.

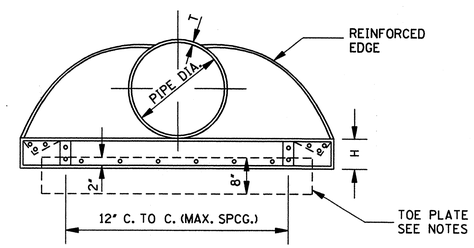

FRONT
TYPICAL ELEVATION

DESIGN I								
PIPE DIA. (In)	T GAGE	DIMENSIONS (In)					APPROX. SLOPE	BODY
		A±1"	B (MAX.)	H±1"	L±1½"	W±2"		
12"	16	6"	6"	6"	21"	24"	2.50	1 PC.
15"	16	7"	8"	6"	26"	30"	2.50	1 PC.
18"	16	8"	10"	6"	31"	36"	2.50	1 PC.
21"	16	9"	12"	6"	36"	42"	2.50	1 PC.
24"	16	10"	13"	6"	41"	48"	2.50	1 PC.
30"	14	12"	16"	8"	51"	60"	2.50	1 PC.
36"	14	14"	19"	9"	60"	72"	2.50	2 PC.
42"	12	16"	22"	11"	69"	84"	2.50	2 PC.
48"	12	18"	27"	12"	78"	90"	2.25	2 PC.
54"	12	18"	30"	12"	84"	102"	2.00	2 PC.
60"	12 *	18"	33"	12"	87"	114"	1.75	3 PC.
66"	12 *	18"	36"	12"	87"	120"	1.50	3 PC.
72"	12 *	18"	39"	12"	87"	126"	1.33	3 PC.
78"	12 *	18"	42"	12"	87"	132"	1.25	3 PC.
84"	12 *	18"	45"	12"	87"	138"	1.17	3 PC.

* NOTE: CENTER PANEL TO BE 10 GAGE.

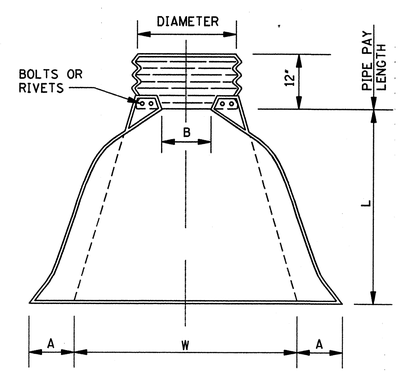

TYPICAL PLAN

DESIGN II							
PIPE DIA. (In)	T GAGE	DIMENSIONS (In)					APPROX. SLOPE
		A±1"	B(MAX.)	H±1"	L±1½"	W±2"	
12"	16	4¾"	6"	6"	21"	24"	2.50
15"	16	6"	8"	6"	26"	30"	2.50
18"	16	7"	9"	6"	31"	36"	2.50
21"	16	8¼"	11"	6"	36"	42"	2.50
24"	16	9½"	12"	6"	42"	48"	2.50
30"	14	12"	15"	7½"	52½"	60"	2.50
36"	14	14"	18"	9"	63"	72"	2.50
42"	12	16"	21"	10½"	73½"	84"	2.50
48"	12	18"	27"	12"	84"	90"	2.50

GENERAL NOTES:

1. ILLUSTRATION SHOWN FOR PIPE OR PIPE-ARCH END SECTION ARE DIAGRAMMATIC. END SECTIONS SHALL CONFORM TO DESIGN I, DESIGN II OR OTHER APPROVED DESIGN.
2. FLARED END SECTIONS ARE NOT TO BE USED INSIDE THE CLEAR ZONE.

DATE	REVISION	BY

MISSISSIPPI DEPARTMENT OF TRANSPORTATION
ROADWAY DESIGN DIVISION
STANDARD PLAN

FLARED END SECTION FOR METAL PIPE & ARCH PIPE

ENGLISH

WORKING NUMBER FE-1B

ISSUE DATE: OCTOBER 1, 1998

SHEET NUMBER 330

STATE	PROJECT NO.
MISS.	

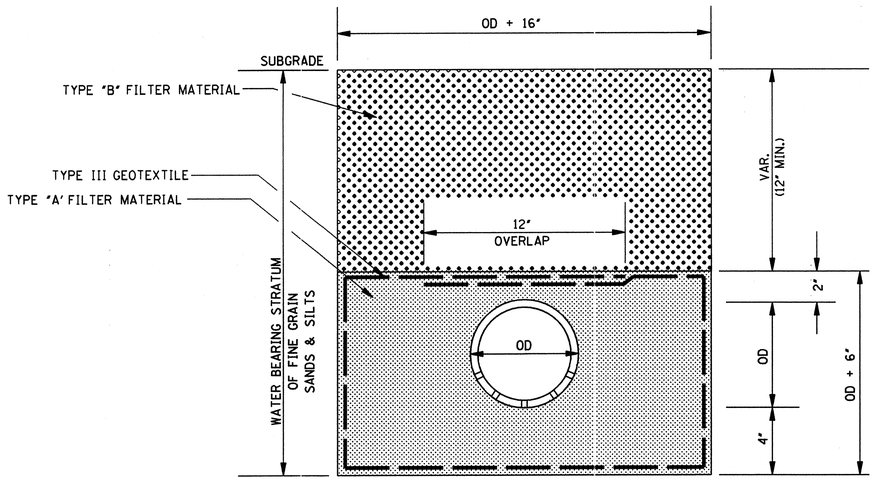

NORMAL UNDERDRAIN TYPE I

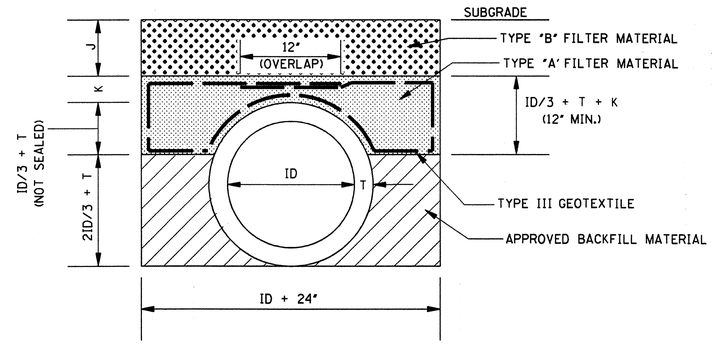

CIRCULAR STORM DRAIN USED AS UNDERDRAIN

PIPE SIZE	T	K	TYPE "A" MATERIAL (yd^3/ft)	TYPE "B" MATERIAL* ($yd^3/ft/ft$)	TYPE III GEOTEXTILE (yd^2/ft)	IMPERVIOUS MATERIAL (yd^3/ft)
6"	--	--	0.0638	0.0694	0.7593	0.0694
18"	2½"	4"	0.099	0.130	1.193	--
24"	3"	2"	0.100	0.148	1.334	--
30"	3½"	2"	0.124	0.167	1.513	--
36"	4"	2"	0.149	0.185	1.691	--
42"	4½"	2"	0.176	0.204	1.869	--
48"	5"	2"	0.204	0.222	2.048	--
54"	5½"	2"	0.233	0.241	2.226	--
60"	6"	2"	0.264	0.259	2.404	--
66"	6½"	2"	0.296	0.278	2.583	--
72"	7"	2"	0.330	0.296	2.761	--
84"	8"	2"	0.401	0.333	3.118	--
96"	9"	2"	0.477	0.370	3.474	--

*NOTE: $yd^3/ft/ft$ = CUBIC YARD PER FOOT DEPTH OF MATERIAL PER FOOT LENGTH OF PIPE.

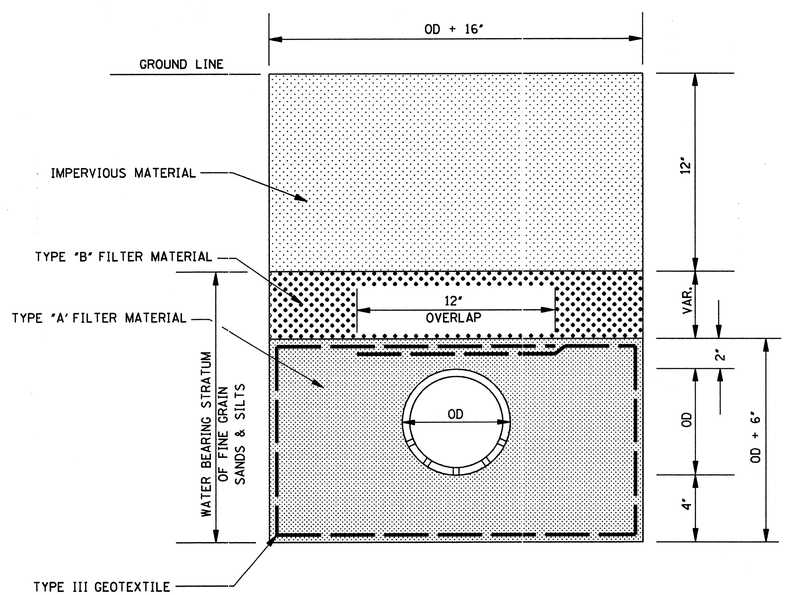

NORMAL UNDERDRAIN TYPE II

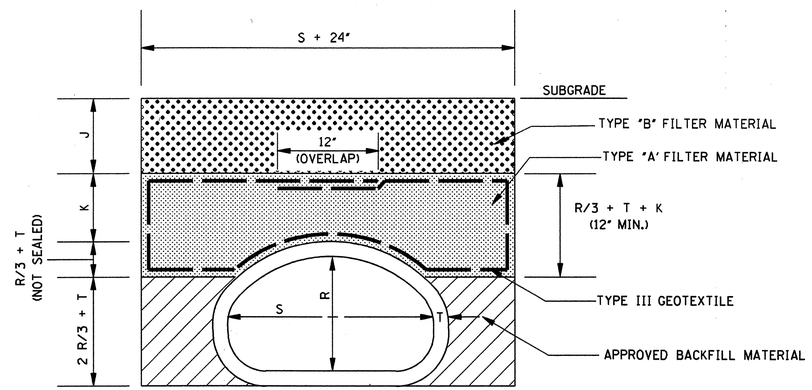

ARCH STORM DRAIN USED AS UNDERDRAIN

PIPE SIZE	T	K	TYPE "A" MATERIAL (yd^3/ft)	TYPE "B" MATERIAL* ($yd^3/ft/ft$)	TYPE III GEOTEXTILE (yd^2/ft)
22" X 13"	2½"	5"	0.109	0.142	1.231
29" X 18"	3"	2.92"	0.113	0.162	1.383
36" X 23"	3½"	2"	0.124	0.186	1.537
44" X 27"	4"	2"	0.154	0.209	1.734
51" X 31"	4½"	2"	0.184	0.232	1.913
58" X 36"	5"	2"	0.217	0.255	2.098
65" X 40"	5½"	2"	0.248	0.275	2.158
73" X 45"	6"	2"	0.289	0.299	2.471
88" X 54"	7"	2"	0.374	0.346	2.849

*NOTE: $yd^3/ft/ft$ = CUBIC YARD PER FOOT DEPTH OF MATERIAL PER FOOT LENGTH OF PIPE.

GENERAL NOTES:

1. QUANTITIES SHOWN WILL BE THE BASIS FOR PAYMENT UNLESS AUTHORIZED MODIFICATIONS ARE MADE.
2. TYPE I UNDERDRAIN IS GENERALLY USED WHEN UNDERDRAIN IS REQUIRED UNDER THE ROADWAY SUBGRADE.
3. TYPE II UNDERDRAIN IS USED AS REQUIRED OUTSIDE THE ROADWAY.
4. 6" OVERLAP SHALL BE REQUIRED AT THE END OF EACH ROLL OF TYPE III GEOTEXTILE. BOTH THE 6" AND 12" OVERLAP SHALL BE INCLUDED FOR PAYMENT UNDER PAY ITEM NO. 605-AA (GEOTEXTILE TYPE III FOR SUBSURFACE DRAINAGE PER SQUARE YARD).
5. (J + K) SHALL BE 12" MINIMUM OR VARIABLE DEPTH UNLESS SPECIFIED ELSEWHERE ON THE PLANS.

DATE	REVISION	BY

MISSISSIPPI DEPARTMENT OF TRANSPORTATION
ROADWAY DESIGN DIVISION
STANDARD PLAN

DETAILS OF NORMAL UNDERDRAIN AND STORM DRAIN USED AS UNDERDRAIN

DEPARTMENT OF TRANSPORTATION ENGLISH MISSISSIPPI

WORKING NUMBER
UD-1

ISSUE DATE: OCTOBER 1, 1998

SHEET NUMBER
331

STATE	PROJECT NO.
MISS.	

NORMAL UNDERDRAIN TYPE II

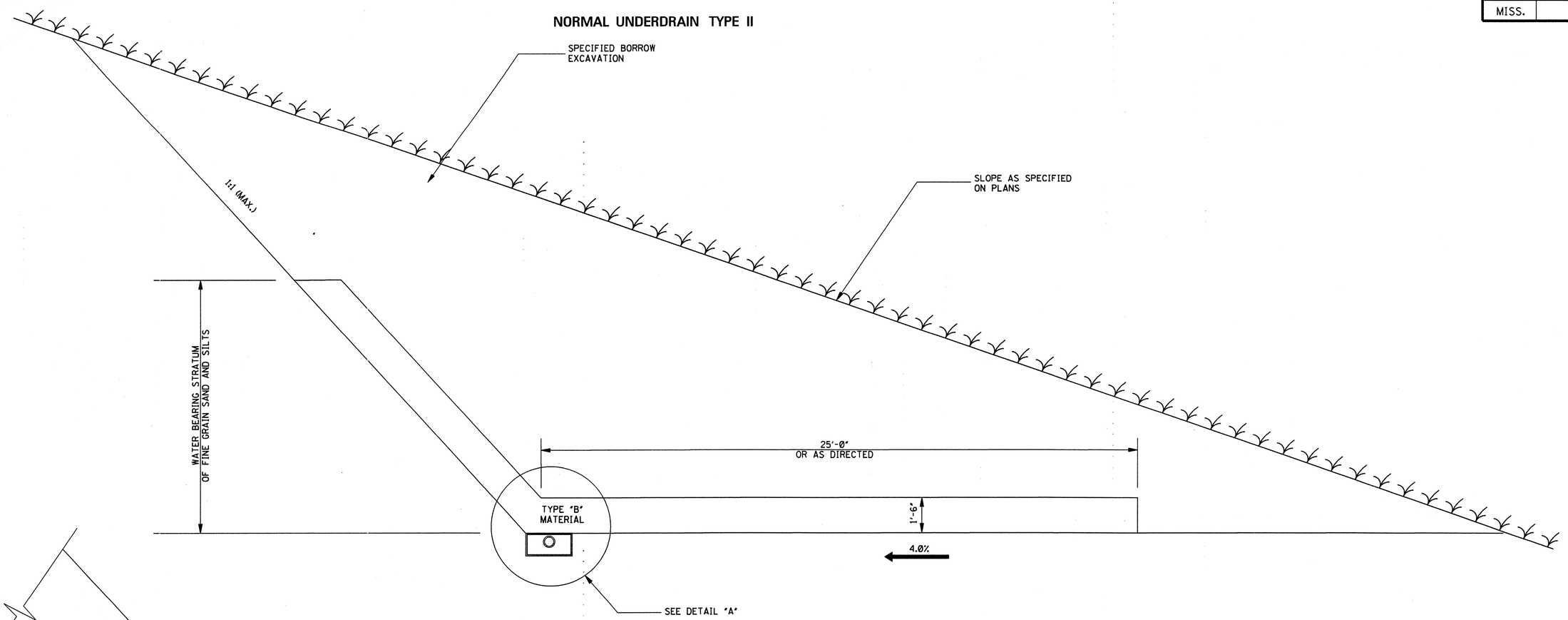

SAND BLANKET DETAIL

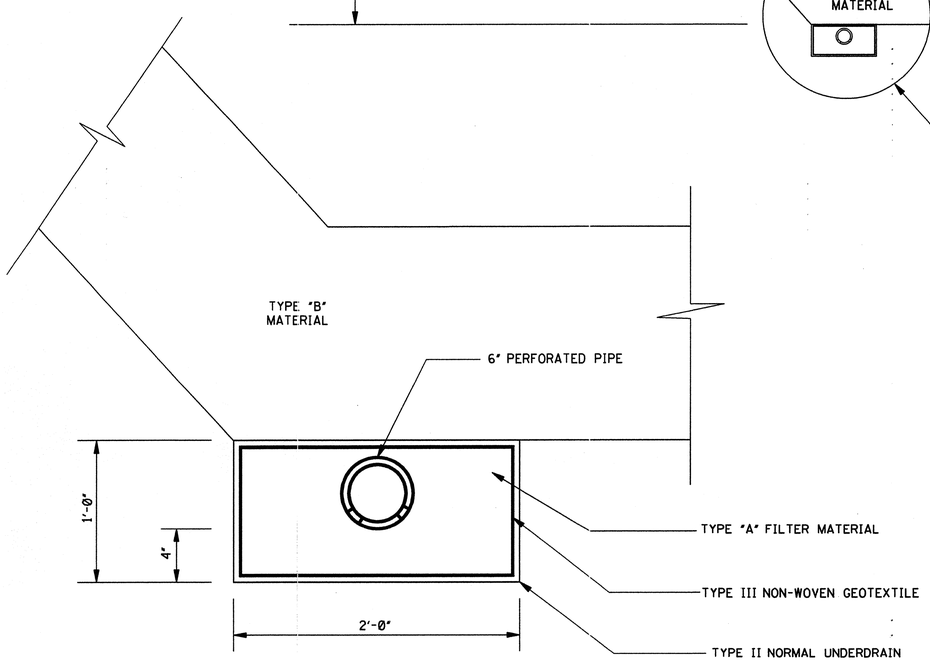

DETAIL "A"

GENERAL NOTE:

1. SEE SHEET UD-1 FOR OTHER DETAILS AND RATES.

DATE	REVISION	BY

MISSISSIPPI DEPARTMENT OF TRANSPORTATION
ROADWAY DESIGN DIVISION
STANDARD PLAN

NORMAL UNDERDRAIN TYPE II

ENGLISH

WORKING NUMBER UD-2

ISSUE DATE: OCTOBER 1, 1998

SHEET NUMBER 332

STATE	PROJECT NO.
MISS.	

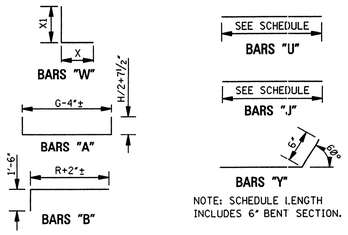

NOTE: SCHEDULE LENGTH INCLUDES 6" BENT SECTION.

BAR BENDING DETAILS

NOTE: WHENEVER THE COMPUTED LENGTH OF BAR EXCEEDS 30', THE SCHEDULED LENGTH INCLUDES A 12" LAP. ALL BARS ARE #4 EXCEPT BARS "W". SEE SCHEDULE FOR SIZE OF BARS "W".

DIMENSIONS AND REINFORCING COMMON TO FLARED HEADWALLS FOR SINGLE, DOUBLE AND TRIPLE LINE PIPE CULVERTS

PIPE DIA	MIN THK "T"	DIMENSIONS C	H	R	S1	S2	U	W	REINFORCING STEEL U NO	U LGTH	W1 NO	W1 SIZE	W1 X	W1 X1	W1 LGTH	W2 NO	W2 SIZE	W2 X	W2 X1	W2 LGTH	W3 NO	W3 SIZE	W3 X	W3 X1	W3 LGTH	W4 NO	W4 SIZE	W4 X	W4 X1	W4 LGTH	W5 NO	W5 SIZE	W5 X	W5 X1	W5 LGTH	W6 NO	W6 SIZE	W6 X	W6 X1	W6 LGTH	W7 NO	W7 SIZE	W7 X	W7 X1	W7 LGTH	W8 NO	W8 SIZE	W8 X	W8 X1	W8 LGTH	Y1 NO	Y1 LGTH	Y2 NO	Y2 LGTH	Y3 NO	Y3 LGTH	Y4 NO	Y4 LGTH	Y5 NO	Y5 LGTH	Y6 NO	Y6 LGTH	Y7 NO	Y7 LGTH	Y8 NO	Y8 LGTH
15	2¼	7	2-5	2-7	2-8¼	2-11¾	6	0-8	4	2-6	4	#4	1-1	1-8	2-9	4	#4	1-0	1-0	2-0																													2	2-7	2	3-8														
18	2½	7	2-9½	3-0	3-2⅛	3-5⅝	6	0-10	4	3-2	4	#4	1-3	2-0	3-3	4	#4	1-0	1-0	2-0																													2	2-7	2	4-2														
24	3	7	3-4½	3-10	4-1⅝	4-5⅛	6	1-0	4	4-2	4	#4	1-8	2-7	4-3	4	#4	1-4	1-7	2-11	2	#4	1-1	1-2	2-3																									2	2-7	2	4-7														
30	3½	7	3-11½	4-6	4-10⅛	5-2⅝	6	1-3	4	4-11	4	#4	2-1	3-2	5-3	4	#4	1-7	2-2	3-9	2	#4	1-1	1-2	2-3																									2	2-7	2	4-7	2	5-9												
36	4	7½	4-6½	5-3	5-9¼	6-0¾	6	1-5	4	5-10	4	#5	2-5	3-9	6-2	4	#4	2-0	2-9	4-9	6	#4	1-5	1-9	3-2																									2	2-7	2	4-7	4	6-7												
42	4½	7½	5-1½	5-11	6-6½	6-10	6	1-8	4	6-7	4	#5	2-11	4-4	7-3	4	#4	2-3	3-4	5-7	4	#4	1-7	2-4	3-11	4	#4	1-3	1-10	3-1																					2	2-7	2	4-7	2	6-7	2	7-7									
48	5	7½	5-8½	6-8	7-4⅞	7-8⅜	6	1-10½	4	7-5	4	#5	3-1	4-10	7-11	4	#5	2-8	3-10	6-6	4	#4	2-0	2-10	4-10	4	#4	1-3	1-10	3-1																					2	2-7	2	4-7	2	6-7	4	8-5									
54	5½	8	6-3½	7-4	8-2⅞	8-5⅝	6	2-1	4	8-3	4	#5	3-6	5-4	8-10	4	#5	3-0	4-4	7-4	4	#4	2-3	3-4	5-7	6	#4	1-8	2-4	4-0																					2	2-7	2	4-7	2	6-7	6	9-3									
60	6	8	6-10½	8-2	9-1¾	9-5⅞	6	2-3	4	9-2	4	#5	3-10	5-11	9-9	4	#5	3-3	4-11	8-2	4	#5	2-6	3-11	6-5	6	#4	1-10	2-11	4-9	2	#4	1-7	2-5	4-0																	2	2-7	2	4-7	2	6-7	2	9-7	4	10-5							
66	6½	8	7-7	9-2	10-3¼	10-7	6½	2-6½	4	10-3	4	#6	4-3	6-8	10-11	4	#5	3-8	5-8	9-4	4	#5	3-2	4-8	7-10	6	#5	2-7	3-8	6-3	4	#4	1-10	2-8	4-6																	2	2-7	2	4-7	2	6-7	2	9-7	6	11-4							
72	7	8	8-2	9-10	11-0¼	11-4¼	7	2-9	4	10-9	4	#6	4-9	7-5	12-2	4	#6	4-2	6-5	10-7	4	#5	3-6	5-5	8-11	6	#5	2-10	4-5	7-3	4	#4	2-0	3-5	5-5	2	#4	1-8	2-5	4-1													2	2-7	2	4-7	2	6-7	2	9-7	2	11-7	4	12-2					
84	8	8	9-4	11-2	12-6⅛	12-10¾	8	3-2	4	12-6	4	#6	5-5	8-7	14-0	4	#6	5-2	7-7	12-9	4	#6	4-6	6-7	11-1	6	#5	3-9	5-7	9-4	4	#5	3-2	4-7	7-9	4	#5	2-6	3-7	6-1													2	2-7	2	4-7	2	6-7	2	9-7	2	11-7	8	13-8					
96	9	8	10-5	12-7	14-1¾	14-6⅝	8	3-7	4	14-2	4	#7	5-7	9-6	15-1	4	#7	5-7	8-6	14-1	4	#6	5-0	7-6	12-6	6	#5	4-4	6-6	10-10	2	#5	3-8	5-6	9-2	4	#5	3-0	4-6	7-6	4	#5	2-5	3-6	5-11									2	2-7	2	4-7	2	6-7	2	9-7	2	11-7	2	13-4	6	15-2			
108	10	8	11-7	14-1	15-10	16-3⅛	9	4-0	4	15-10	4	#7	6-5	10-9	17-2	6	#7	6-5	9-9	16-2	4	#7	5-10	8-9	14-7	6	#6	5-2	7-9	12-11	4	#5	4-6	6-9	11-3	4	#5	3-10	5-9	9-7	2	#5	3-2	4-9	7-11	4	#5	2-8	3-9	6-5	2	2-4	2	4-7	2	6-7	2	9-7	2	11-7	2	14-1	2	15-4	6	16-10

GENERAL NOTES:

1. SPECIFICATIONS: MISSISSIPPI DEPARTMENT OF TRANSPORTATION, LATEST EDITION.
2. ALL CONCRETE SHALL BE CLASS "B".
3. ALL EXPOSED EDGES SHALL BE CHAMFERED ¾".
4. EXPOSED CONCRETE SURFACES SHALL BE FINISHED IN ACCORDANCE WITH THE APPLICABLE SECTION OF THE MDOT SPECIFICATIONS.
5. ALL LENGTHS AND QUANTITIES IN THE TABLES HEREON ARE BASED ON CONCRETE PIPE.
6. QUANTITIES SHOWN SHALL BE THE BASIS FOR FINAL PAYMENT UNLESS AUTHORIZED MODIFICATIONS ARE MADE.

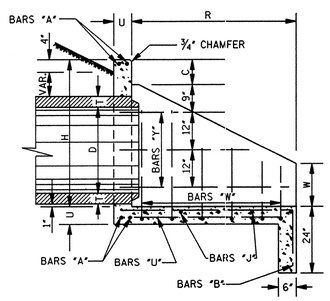

SECTION B–B

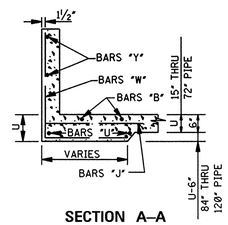

SECTION A–A

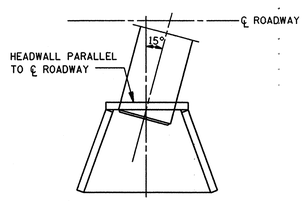

15° SKEW INSTALLATION
PLAN

DIMENSIONS AND REINFORCING FOR FLARED HEADWALL FOR SINGLE LINE PIPE CULVERT

PIPE DIA	DIMENSIONS A	B	E	G	X	Y	Z	REINFORCING STEEL A NO	A LGTH	B NO	B LGTH	C NO	C LGTH	D NO	D LGTH	J1 NO	J1 LGTH	J2 NO	J2 LGTH	J3 NO	J3 LGTH	J4 NO	J4 LGTH	J5 NO	J5 LGTH	J6 NO	J6 LGTH	J7 NO	J7 LGTH	J8 NO	J8 LGTH	J9 NO	J9 LGTH	J10 NO	J10 LGTH	J11 NO	J11 LGTH	J12 NO	J12 LGTH	J13 NO	J13 LGTH	J14 NO	J14 LGTH	PAY QTY 1-HEADWALL CONC CU YDS	STEEL LBS
15	-	-	-	3-4⅞	5-2¾	2-3	-	4	6-8	4	4-3	2	2-8	2	1-10	1	3-9	1	4-11	1	5-6																						0.67	73
18	-	-	-	3-7⅞	5-11⅝	2-6	-	4	7-3	5	4-8	2	3-0	2	2-0	1	3-11	1	5-1	1	6-3	1	6-3																				0.84	88
24	-	-	-	4-2⅞	7-6¼	3-1	-	4	8-5	5	5-6	2	3-7	2	2-3	1	4-6	1	5-8	1	6-10	1	8-0	1	7-9																		1.19	114
30	-	-	-	4-10⅜	8-10⅞	3-8½	-	4	9-8	6	6-2	2	4-2	2	2-6	1	5-2	1	6-4	1	7-6	1	8-8	1	9-0																		1.58	140
36	-	-	-	5-4⅞	10-3¾	4-3	-	4	10-9	7	6-11	2	4-9	2	2-9	1	5-8	1	6-10	1	8-0	1	9-2	1	10-4	1	10-6																2.02	181
42	-	-	-	5-11⅞	11-8	4-10	-	4	11-11	7	7-7	2	5-4	2	3-0	1	6-3	1	7-5	1	8-7	1	9-9	1	10-11	1	12-1	1	11-9														2.50	234
48	-	-	-	6-6⅞	13-1⅞	5-5	-	4	13-1	8	8-4	2	5-11	2	3-3	1	6-10	1	8-0	1	9-2	1	10-4	1	11-6	1	12-8	1	13-3														3.07	271
54	-	-	-	7-2⅞	14-6⅝	6-1	-	4	14-4	8	9-0	2	6-6	2	3-6	1	7-6	1	8-8	1	9-10	1	11-0	1	12-2	1	13-4	1	14-6	1	14-9												3.65	336
60	-	-	-	7-9⅞	16-1⅞	6-8	-	4	15-6	9	9-10	2	7-1	2	3-9	1	8-1	1	9-3	1	10-5	1	11-7	1	12-9	1	13-11	1	15-1	1	16-3	1	16-3										4.35	397
66	-	-	-	8-6	17-10	7-3	-	4	16-11	9	10-10	2	7-10	2	4-3	1	8-9	1	10-0	1	11-2	1	12-4	1	13-6	1	14-7	1	15-9	1	16-11	1	18-0	1	18-0								5.71	513
72	-	-	-	9-2⅛	19-2¼	7-10	-	4	18-2	10	11-6	2	8-6	2	4-7	1	9-5	1	10-7	1	11-9	1	12-11	1	14-1	1	15-3	1	16-5	1	17-7	1	18-8	1	19-6								7.01	594
84	4-0	17-0	2-0	10-6½	21-10¾	9-0	-	4	20-8	11	12-10	2	9-8	2	5-3	1	10-9	1	11-11	1	13-1	1	14-3	1	15-5	1	16-7	1	17-9	1	18-11	1	20-1	1	21-3	2	22-4						9.82	801
96	4-3	18-2	2-0	11-7	24-8⅜	10-2	-	4	22-11	12	14-3	2	10-9	2	5-9	1	12-0	1	13-2	1	14-4	1	15-6	1	16-8	1	17-10	1	19-0	1	20-2	1	21-4	1	22-6	1	23-8	1	24-10	1	24-11		12.16	980
108	4-10	20-10	2-0	12-11⅛	27-7⅛	11-4	-	4	25-5	14	15-9	2	12-0	2	6-4	1	13-2	1	14-4	1	15-6	1	16-8	1	17-10	1	19-0	1	20-2	1	21-4	1	22-6	1	23-8	1	24-10	1	26-0	1	27-2	1	27-10	16.66	1333

DIMENSIONS AND REINFORCING FOR FLARED HEADWALL FOR DOUBLE LINE PIPE CULVERT

PIPE DIA	DIMENSIONS A	B	E	G	X	Y	Z	REINFORCING STEEL A NO	A LGTH	B NO	B LGTH	C NO	C LGTH	D NO	D LGTH	J1 NO	J1 LGTH	J2 NO	J2 LGTH	J3 NO	J3 LGTH	J4 NO	J4 LGTH	J5 NO	J5 LGTH	J6 NO	J6 LGTH	J7 NO	J7 LGTH	J8 NO	J8 LGTH	J9 NO	J9 LGTH	J10 NO	J10 LGTH	J11 NO	J11 LGTH	J12 NO	J12 LGTH	J13 NO	J13 LGTH	J14 NO	J14 LGTH	PAY QTY 1-HEADWALL CONC CU YDS	STEEL LBS
15	-	-	-	5-11⅞	7-9¾	4-10	1-0	4	9-3	7	4-3	3	2-8	4	1-10	1	6-3	1	7-5	1	8-1																						0.97	98
18	-	-	-	6-5⅞	8-9⅞	5-4	1-0	4	10-1	8	4-8	3	3-0	4	2-0	1	6-9	1	7-11	1	9-1	1	9-1																				1.20	117
24	-	-	-	7-7⅞	10-11⅞	6-6	1-0	4	11-10	9	5-6	3	3-7	4	2-3	1	7-11	1	9-1	1	10-3	1	11-5	1	11-2																		1.69	155
30	-	-	-	9-1⅞	13-2⅞	8-0	1-3	4	13-11	10	6-2	4	4-2	4	2-6	1	9-6	1	10-8	1	11-9	1	12-11	1	13-3																		2.28	191
36	-	-	-	10-5⅞	15-4¾	9-4	1-6	4	15-10	12	6-11	4	4-9	4	2-9	1	10-9	1	11-11	1	13-1	1	14-3	1	15-5	1	15-7																2.94	249
42	-	-	-	11-10⅞	17-7	10-9	1-9	4	17-10	13	7-7	4	5-4	4	3-0	1	12-2	1	13-4	1	14-6	1	15-8	1	16-10	1	18-0	1	17-8														3.68	319
48	-	-	-	13-3⅞	19-10⅞	12-2	2-0	4	19-10	15	8-4	4	5-11	4	3-3	1	13-7	1	14-9	1	15-11	1	17-1	1	18-3	1	19-5	1	20-0														4.54	372
54	-	-	-	14-10⅞	22-2⅝	13-9	2-3	4	22-0	16	9-0	5	6-6	4	3-6	1	15-2	1	16-4	1	17-6	1	18-8	1	19-10	1	21-0	1	22-2	1	22-5												5.44	464
60	-	-	-	16-3⅞	24-7⅛	15-2	2-6	4	24-0	17	9-10	5	7-1	4	3-9	1	16-7	1	17-9	1	18-11	1	20-1	1	21-3	1	22-5	1	23-7	1	24-9	1	24-9										6.51	543
66	-	-	-	17-10	27-2	16-7	2-9	4	26-3	18	10-10	5	7-10	4	4-3	1	18-1	1	19-3	1	20-4	1	21-6	1	22-8	1	23-10	1	25-0	1	26-2	2	27-4										8.52	685
72	-	-	-	19-4⅞	29-4¼	18-0	3-0	4	28-4	20	11-6	5	8-6	4	4-7	1	19-7	1	20-9	1	21-11	1	23-1	1	24-3	1	25-5	1	26-7	1	27-9	1	28-10	1	29-8								10.49	789
84	3-0	28-10	13-10	22-4½	33-8¾	21-10	3-6	4	33-6	23	12-10	6	9-8	4	5-3	1	22-7	1	23-9	1	24-11	1	26-1	1	27-3	1	28-5	1	29-7	1	31-9	1	32-11	1	34-1	2	35-2						14.34	1070
96	3-0	31-8	15-6	25-1	38-2⅞	23-8	4-0	4	37-5	26	14-3	7	10-9	4	5-9	1	25-6	1	26-8	1	27-10	1	29-0	1	31-2	1	32-4	1	33-6	1	34-8	1	35-10	1	37-0	1	38-2	1	39-4	1	39-5		17.79	1319
108	3-0	36-0	17-2	28-11⅛	42-9⅞	26-6	4-6	4	41-7	29	15-9	7	12-0	4	6-4	1	28-4	1	29-6	1	31-8	1	32-10	1	34-0	1	35-2	1	36-4	1	37-6	1	38-8	1	39-10	1	41-0	1	42-2	1	43-4	1	44-0	24.00	1733

DIMENSIONS AND REINFORCING FOR FLARED HEADWALL FOR TRIPLE LINE PIPE CULVERT

PIPE DIA	DIMENSIONS A	B	E	G	X	Y	Z	REINFORCING STEEL A NO	A LGTH	B NO	B LGTH	C NO	C LGTH	D NO	D LGTH	J1 NO	J1 LGTH	J2 NO	J2 LGTH	J3 NO	J3 LGTH	J4 NO	J4 LGTH	J5 NO	J5 LGTH	J6 NO	J6 LGTH	J7 NO	J7 LGTH	J8 NO	J8 LGTH	J9 NO	J9 LGTH	J10 NO	J10 LGTH	J11 NO	J11 LGTH	J12 NO	J12 LGTH	J13 NO	J13 LGTH	J14 NO	J14 LGTH	PAY QTY 1-HEADWALL CONC CU YDS	STEEL LBS
15	-	-	-	8-6⅞	10-4¾	7-5	1-0	4	11-10	10	4-3	4	2-8	6	1-10	1	8-9	1	9-11	1	10-6																						1.27	122
18	-	-	-	9-3⅞	11-7⅝	8-2	1-0	4	12-11	11	4-8	4	3-0	6	2-0	1	9-7	1	10-9	1	11-11	1	11-11																				1.56	146
24	-	-	-	11-0⅞	14-4⅛	9-11	1-0	4	15-3	13	5-6	4	3-7	6	2-3	1	11-4	1	12-6	1	13-8	1	14-10	1	14-7																		2.19	195
30	-	-	-	13-5⅞	17-5⅞	12-3½	1-3	4	18-3	14	6-2	6	4-2	6	2-6	1	13-9	1	14-11	1	16-1	1	17-2	1	17-4																		2.98	242
36	-	-	-	15-6⅞	20-5¾	14-5	1-6	4	20-11	17	6-11	6	4-9	6	2-9	1	15-10	1	17-0	1	18-2	1	19-4	1	20-6	1	20-8																3.86	312
42	-	-	-	17-9⅞	23-6	16-8	1-9	4	23-9	19	7-7	6	5-4	6	3-0	1	18-1	1	19-3	1	20-5	1	21-7	1	22-9	1	23-11	1	23-7														4.86	404
48	-	-	-	20-0⅞	26-7⅝	18-11	2-0	4	26-7	22	8-4	6	5-11	6	3-3	1	20-4	1	21-6	1	22-8	1	23-10	1	25-0	1	26-2	1	26-9														6.01	473
54	-	-	-	22-6⅞	29-10⅝	21-5	2-3	4	29-8	24	9-0	8	6-6	6	3-6	1	22-10	1	24-0	1	25-2	1	26-4	1	27-6	1	28-8	1	29-10	1	31-1												7.23	592
60	-	-	-	24-9⅞	33-1⅞	23-8	2-6	4	33-6	25	9-10	8	7-1	6	3-9	1	25-1	1	26-3	1	27-5	1	28-7	1	29-9	1	31-11	1	33-1	1	34-3												8.67	691
66	-	-	-	27-2	36-6	25-11	2-9	4	36-7	27	10-10	8	7-10	6	4-3	1	27-7	1	28-9	1	29-11	1	32-2	1	33-4	1	34-6	1	35-8	1	36-10	2	37-8										11.33	853
72	-	-	-	29-6⅞	39-6¼	28-2	3-0	4	39-6	30	11-6	8	8-6	6	4-7	1	29-9	1	31-11	1	33-1	1	34-3	1	35-5	1	36-7	1	37-9	1	38-11	1	40-0	1	40-10								13.97	993
84	3-0	40-8	25-8	34-2½	45-6¾	32-8	3-6	4	45-4	35	12-10	10	9-9	6	5-3	1	35-5	1	36-7	1	37-9	1	38-11	1	40-1	1	41-3	1	42-5	1	43-7	1	44-9	1	45-11	2	47-0						18.92	1337
96	3-0	45-2	29-0	38-7	51-8⅜	37-2	4-0	4	50-11	39	14-3	12	10-9	6	5-9	1	40-0	1	41-2	1	42-4	1	43-6	1	44-8	1	45-10	1	47-0	1	48-2	1	49-4	1	50-6	1	51-8	1	52-10	1	52-11		23.51	1642
108	3-0	51-2	32-4	43-3⅞	57-11⅛	41-8	4-6	4	56-9	44	15-9	12	12-0	6	6-4	1	44-6	1	45-8	1	46-10	1	48-0	1	49-2	1	50-4	1	51-6	1	52-8	1	53-10	1	55-0	1	56-2	1	57-4	1	58-6	1	59-2	31.54	2123

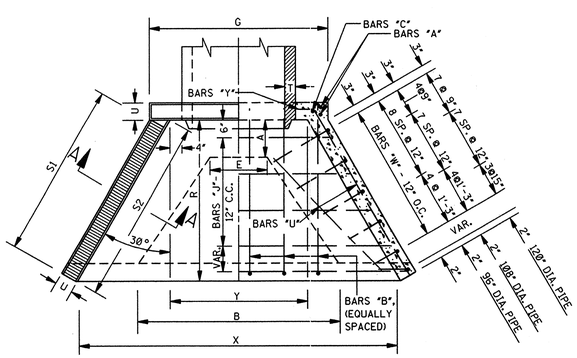

PLAN

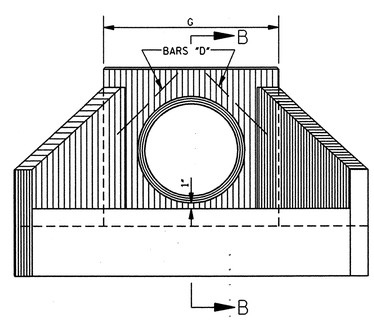

FRONT ELEVATION

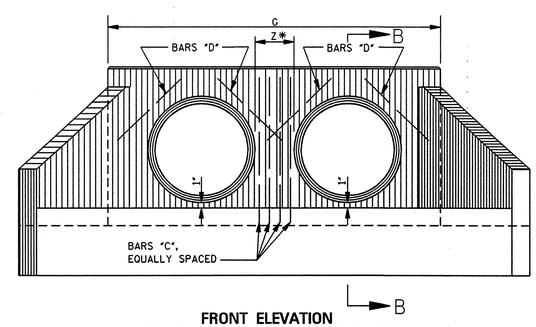

FRONT ELEVATION

*NOTE: MEASURE NORMAL (PERPENDICULAR) TO PIPE.

BY	REVISION	DATE

MISSISSIPPI DEPARTMENT OF TRANSPORTATION
ROADWAY DESIGN DIVISION
STANDARD PLAN

HEADWALLS FOR CONCRETE PIPE 2:1 SLOPE - 0°- 15°SKEW

ENGLISH

WORKING NUMBER HW-2100

ISSUE DATE: OCTOBER 1, 1998

SHEET NUMBER 340

STATE	PROJECT NO.
MISS.	

DIMENSIONS AND REINFORCING COMMON TO FLARED HEADWALLS FOR SINGLE, DOUBLE AND TRIPLE LINE PIPE CULVERTS

PIPE DIA	MIN THK "T"	DIMENSIONS C	H	R	S1	S2	U	W
15	2¼	7	2-5	2-7	3-1⅞	3-7⅞	6	0-8
18	2½	7	2-9½	3-0	3-8⅞	4-2⅞	6	0-10
24	3	7	3-4½	3-10	4-11	5-5	6	1-0
30	3½	7	3-11½	4-6	5-10⅞	6-4⅞	6	1-3
36	4	7½	4-6½	5-3	6-11⅞	7-5⅞	6	1-5
42	4½	7½	5-1½	5-11	7-10⅞	8-4⅞	6	1-8
48	5	7½	5-8½	6-8	8-11⅞	9-5⅞	6	1-10½
54	5½	8	6-3½	7-4	9-10½	10-4½	6	2-1
60	6	8	6-10½	8-2	11-8⅝	11-6⅝	6	2-3
66	6½	8	7-7	9-2	12-5⅛	12-11⅞	6½	2-6½
72	7	8	8-2	9-10	13-3⅞	13-10⅛	7	2-9
84	8	8	9-4	11-2	15-1½	15-9½	8	3-2
96	9	8	10-5	12-7	17-1½	17-9½	8	3-6
108	10	8	11-7	14-1	19-2	19-11	9	4-0

PIPE DIA	REINFORCING STEEL US NO	US LGTH	UL NO	UL LGTH	W1 S NO	W1 L NO	W1 SIZE	W1 X	W1 X1	W1 LGTH	W2 S NO	W2 L NO	W2 SIZE	W2 X	W2 X1	W2 LGTH	W3 S NO	W3 L NO	W3 SIZE	W3 X	W3 X1	W3 LGTH	W4 S NO	W4 L NO	W4 SIZE	W4 X	W4 X1	W4 LGTH	W5 S NO	W5 L NO	W5 SIZE	W5 X	W5 X1	W5 LGTH	W6 S NO	W6 L NO	W6 SIZE	W6 X	W6 X1	W6 LGTH	W7 S NO	W7 L NO	W7 SIZE	W7 X	W7 X1	W7 LGTH	W8 S NO	W8 L NO	W8 SIZE	W8 X	W8 X1	W8 LGTH
15	2	2-7	2	3-0	2	2	#4	1-1	1-8	2-9	2	2	#4	1-0	1-0	2-0																																				
18	2	3-0	2	3-7	2	2	#4	1-3	2-0	3-3	2	2	#4	1-0	1-0	2-0																																				
24	3	2	3-10	2	4-9	2	2	#4	1-8	2-7	4-3	2	3	#4	1-4	1-7	2-11	1	1	#4	1-0	1-2	2-2																														
30	3	2	4-6	2	5-9	2	2	#4	2-1	3-2	5-3	2	3	#4	1-7	2-2	3-9	2	2	#4	1-0	1-5	2-5																														
36	4	2	5-3	2	6-9	2	2	#5	2-5	3-9	6-2	2	3	#4	2-0	2-9	4-9	2	3	#4	1-0	1-7	2-7																														
42	4	2	5-11	2	7-9	2	2	#5	2-11	4-4	7-3	2	3	#4	2-3	3-4	5-7	2	3	#4	1-7	2-4	3-11	1	1	#4	1-2	1-10	3-0																								
48	5	2	6-8	2	8-9	2	2	#6	3-1	4-10	7-11	2	3	#5	2-8	3-10	6-6	2	3	#4	1-10	2-10	4-8	2	2	#4	1-3	2-0	3-3																								
54	5	2	7-4	2	9-9	2	2	#5	3-6	5-4	8-10	2	3	#5	3-0	4-4	7-4	2	3	#4	2-3	3-4	5-7	2	3	#4	1-7	2-4	3-11																								
60	6	2	8-2	2	10-10	2	2	#5	3-10	5-11	9-9	2	3	#5	3-3	4-11	8-2	2	3	#5	2-6	3-11	6-5	2	2	#4	1-10	2-11	4-9	1	2	#4	1-8	2-5	4-1																		
66	6	2	9-2	2	12-3	2	2	#6	4-3	6-8	10-11	2	3	#5	3-8	5-8	9-4	2	3	#5	3-2	4-8	7-10	2	2	#5	2-7	3-8	6-3	2	3	#4	1-10	2-8	4-6																		
72	7	2	9-10	2	13-2	2	2	#6	4-9	7-5	12-2	2	3	#6	4-2	6-5	10-7	2	3	#5	3-6	5-5	8-11	2	2	#5	2-10	4-5	7-3	2	3	#4	2-0	3-5	5-5	1	1	#4	1-9	3-0	4-9												
84	8	2	11-2	2	15-0	2	2	#6	5-5	8-7	14-0	2	3	#6	5-2	7-7	12-9	2	3	#6	4-6	6-7	11-1	2	2	#5	3-9	5-7	9-4	2	3	#5	3-2	4-7	7-9	2	3	#5	2-6	3-7	6-1												
96	9	2	12-7	2	17-0	2	2	#7	5-7	9-6	15-1	1	3	#7	5-7	8-6	14-1	3	3	#6	5-0	7-6	12-6	2	2	#5	4-4	6-6	10-10	1	2	#5	3-8	5-6	9-2	2	2	#5	3-0	4-6	7-6	2	2	#5	2-3	3-4	5-7						
108	10	2	14-1	2	19-0	2	2	#7	6-5	10-9	17-2	2	4	#7	6-5	9-9	16-2	2	3	#7	5-10	8-9	14-7	2	3	#6	5-2	7-9	12-11	2	2	#5	4-6	6-9	11-3	1	2	#5	3-10	5-9	9-7	2	2	#5	3-2	4-9	7-11	1	2	#5	2-10	4-5	7-3

PIPE DIA	YS1 LGTH	YS2 LGTH	YS3 LGTH	YS4 LGTH	YS5 LGTH	YS6 LGTH	YS7 LGTH	YS8 LGTH	YL1 LGTH	YL2 LGTH	YL3 LGTH	YL4 LGTH	YL5 LGTH	YL6 LGTH	YL7 LGTH	YL8 LGTH
15	2-4	3-5							2-7	4-3						
18	2-4	3-10							2-7	4-10						
24	2-4	4-4	4-8						2-7	5-7	6-0					
30	2-4	4-4	5-4						2-7	5-7	6-11					
36	2-4	4-4	6-1						2-7	5-7	8-0					
42	2-4	4-4	6-4	6-9					2-7	5-7	8-7	8-11				
48	2-4	4-4	6-4	7-6					2-7	5-7	8-7	10-0				
54	2-4	4-4	6-4	8-2					2-7	5-7	8-7	10-11				
60	2-4	4-4	6-4	8-4	9-0				2-7	5-7	8-7	10-7	12-1			
66	2-4	4-4	6-4	8-4	10-0				2-7	5-7	8-7	10-7	13-7			
72	2-4	4-4	6-4	8-4	10-4	2-10-8			2-7	5-7	8-7	10-7	13-7	14-6		
84	2-4	4-4	6-4	8-4	10-4	3-12-0			2-7	5-7	8-7	10-7	13-7	16-5		
96	2-4	3-4	6-4	8-4	9-7	1-12-1	3-13-5		2-8	5-8	8-8	10-8	13-2	15-8	3-18-3	
108	2-3	3-9	5-9	7-9	10-3	1-11-6	1-14-0	4-15-0	2-6	5-6	8-6	11-6	14-0	16-6	1-19-0	4-20-4

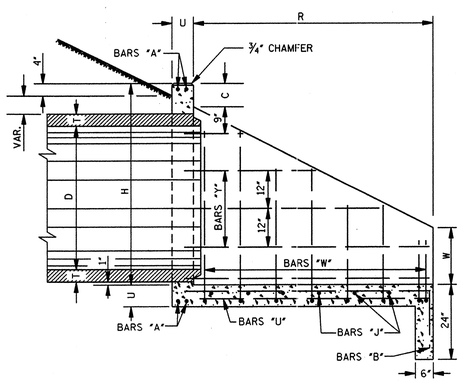

SECTION B–B

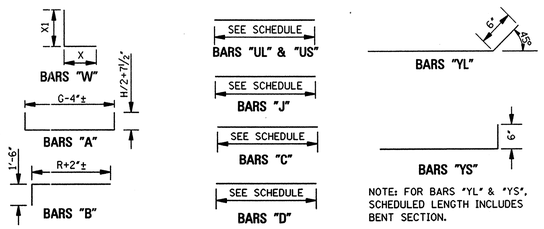

NOTE: FOR BARS "YL" & "YS", SCHEDULED LENGTH INCLUDES BENT SECTION.

BAR BENDING DETAILS

NOTE: WHENEVER THE COMPUTED LENGTH OF BAR EXCEEDS 30', THE SCHEDULED LENGTH INCLUDES A 12" LAP. ALL BARS ARE #4 EXCEPT BARS "W". SEE SCHEDULE FOR SIZE OF BARS "W". IN BAR DESIGNATIONS (e.g. "YS" & "YL"), S DENOTES SHORT WING AND L DENOTES LONG WING.

GENERAL NOTES:

1. SPECIFICATIONS: MISSISSIPPI DEPARTMENT OF TRANSPORTATION, LATEST EDITION.
2. ALL CONCRETE SHALL BE CLASS "B".
3. ALL EXPOSED EDGES SHALL BE CHAMFERED ¾".
4. EXPOSED CONCRETE SURFACES SHALL BE FINISHED IN ACCORDANCE WITH THE APPLICABLE SECTION OF THE MDOT SPECIFICATIONS.
5. ALL LENGTHS AND QUANTITIES IN THE TABLES HEREON ARE BASED ON CONCRETE PIPE.
6. QUANTITIES SHOWN SHALL BE THE BASIS FOR FINAL PAYMENT UNLESS AUTHORIZED MODIFICATIONS ARE MADE.

DIMENSIONS AND REINFORCING FOR FLARED HEADWALL FOR SINGLE LINE PIPE CULVERT

PIPE DIA	DIMENSIONS A	B	E	G	X	Y	Z	REINFORCING STEEL A NO	A LGTH	B NO	B LGTH	C NO	C LGTH	D NO	D LGTH	J1 NO	J1 LGTH	J2 NO	J2 LGTH	J3 NO	J3 LGTH	J4 NO	J4 LGTH	J5 NO	J5 LGTH	J6 NO	J6 LGTH	J7 NO	J7 LGTH	J8 NO	J8 LGTH	J9 NO	J9 LGTH	J10 NO	J10 LGTH	J11 NO	J11 LGTH	J12 NO	J12 LGTH	J13 NO	J13 LGTH	J14 NO	J14 LGTH	PAY QTY 1-HEADWALL CONC CU YDS	STEEL LBS
15	-	-	-	3-8½	5-1	2-6	-	4	7-0	5	4-3	2	2-8	2	1-10	1	3-10	1	4-10	1	5-7																							0.68	77
18	-	-	-	4-0	5-9⅞	2-9⅞	-	4	7-8	5	4-8	2	3-0	2	2-0	1	4-2	1	5-2	1	6-2	1	6-4																						0.87	89
24	-	-	-	4-8	7-3½	3-5½	-	4	8-11	6	5-6	2	3-7	2	2-3	1	4-10	1	5-10	1	6-10	1	7-10																						1.24	123
30	-	-	-	5-4⅞	8-8⅛	4-2⅛	-	4	10-3	7	6-2	2	4-2	2	2-6	1	5-7	1	6-7	1	7-7	1	8-7	1	9-2																				1.63	155
36	-	-	-	6-0⅛	10-0⅞	4-9⅞	-	4	11-5	7	6-11	2	4-9	2	2-9	1	6-2	1	7-2	1	8-2	1	9-2	1	10-2	1	10-7																		2.10	202
42	-	-	-	6-8¼	11-4¾	5-5¾	-	4	12-8	8	7-7	2	5-4	2	3-0	1	6-10	1	7-10	1	8-10	1	9-10	1	10-10	1	11-10																		2.60	237
48	-	-	-	7-4¼	12-9⅞	6-1⅞	-	4	13-11	9	8-4	2	5-11	2	3-3	1	7-6	1	8-6	1	9-6	1	10-6	1	11-6	1	12-6	1	13-4																3.19	304
54	-	-	-	8-1½	14-3	6-11	-	4	15-4	9	9-0	2	6-6	2	3-6	1	8-4	1	9-4	1	10-4	1	11-4	1	12-4	1	13-4	1	14-4	1	14-9														3.80	352
60	-	-	-	8-9⅝	15-9⅞	7-7⅞	-	4	16-7	10	9-10	2	7-1	2	3-9	1	9-0	1	10-0	1	11-0	1	12-0	1	13-0	1	14-0	1	15-0	1	16-0	1	16-3												4.54	426
66	-	-	-	9-7	17-5¼	8-3¼	-	4	18-1	11	10-10	2	7-10	2	4-3	1	9-9	1	10-9	1	11-9	1	12-9	1	13-9	1	14-9	1	15-9	1	16-9	1	17-9	1	18-0										5.95	543
72	-	-	-	10-4¼	18-9⅜	8-11⅜	-	4	19-5	11	11-6	2	8-6	2	4-7	1	10-6	1	11-6	1	12-6	1	13-6	1	14-6	1	15-6	1	16-6	1	17-6	1	18-6	1	19-4										7.32	618
84	3-2	11-2	2-0	11-10¾	21-5½	10-3½	-	4	22-2	13	12-10	2	9-8	2	5-3	1	12-0	1	13-0	1	14-0	1	15-0	1	16-0	1	17-0	1	18-0	1	19-0	1	20-0	1	21-0	1	22-0	1	22-2						10.39	845
96	3-6	12-7	2-0	13-3	24-2⅝	11-7⅝	-	4	24-7	15	14-3	2	10-9	2	5-9	1	13-5	1	14-5	1	15-5	1	16-5	1	17-5	1	18-5	1	19-5	1	20-5	1	21-5	1	22-5	1	23-5	1	24-5	1	24-11				12.85	1047
108	4-0	14-1	2-0	14-9½	27-0⅞	12-11⅞	-	4	27-4	16	15-9	2	12-0	2	6-4	1	15-0	1	16-0	1	17-0	1	18-0	1	19-0	1	20-0	1	21-0	1	22-0	1	23-0	1	24-0	1	25-0	1	26-0	1	27-0	1	27-10		17.71	1411

DIMENSIONS AND REINFORCING FOR FLARED HEADWALL FOR DOUBLE LINE PIPE CULVERT

PIPE DIA	DIMENSIONS A	B	E	G	X	Y	Z	REINFORCING STEEL A NO	A LGTH	B NO	B LGTH	C NO	C LGTH	D NO	D LGTH	J1 NO	J1 LGTH	J2 NO	J2 LGTH	J3 NO	J3 LGTH	J4 NO	J4 LGTH	J5 NO	J5 LGTH	J6 NO	J6 LGTH	J7 NO	J7 LGTH	J8 NO	J8 LGTH	J9 NO	J9 LGTH	J10 NO	J10 LGTH	J11 NO	J11 LGTH	J12 NO	J12 LGTH	J13 NO	J13 LGTH	J14 NO	J14 LGTH	PAY QTY 1-HEADWALL CONC CU YDS	STEEL LBS
15	-	-	-	6-8¼	8-0¾	5-5¾	1-0	4	10-0	8	4-3	3	2-8	4	1-10	1	6-10	1	7-10	1	8-6																							1.01	104
18	-	-	-	7-3¼	9-0⅝	6-0⅝	1-0	4	11-0	8	4-8	3	3-0	4	2-0	1	7-5	1	8-5	1	9-5	1	9-7																						1.29	121
24	-	-	-	8-7⅞	11-2⅞	7-4⅞	1-0	4	12-11	10	5-6	3	3-7	4	2-3	1	8-9	1	9-9	1	10-9	1	11-9																						1.82	164
30	-	-	-	10-4⅛	13-7⅝	9-1⅝	1-3	4	15-3	11	6-2	4	4-2	4	2-6	1	10-6	1	11-6	1	12-6	1	13-6	1	14-2																				2.45	210
36	-	-	-	11-10½	16-1	10-8	1-6	4	17-4	13	6-11	4	4-9	4	2-9	1	12-0	1	13-0	1	14-0	1	15-0	1	16-0	1	16-7																		3.17	279
42	-	-	-	13-6¼	18-2¾	12-3¾	1-9	4	19-6	15	7-7	4	5-4	4	3-0	1	13-8	1	14-8	1	15-8	1	16-8	1	17-8	1	18-8	1	18-9																3.96	342
48	-	-	-	15-1¾	20-7⅞	13-11⅜	2-0	4	21-9	16	8-4	4	5-11	4	3-3	1	15-4	1	16-4	1	17-4	1	18-4	1	19-4	1	20-4	1	21-1																4.86	412
54	-	-	-	16-11¾	23-1¼	15-9¼	2-3	4	24-2	18	9-0	5	6-6	4	3-6	1	17-2	1	18-2	1	19-2	1	20-2	1	21-2	1	22-2	1	23-2	1	23-7														5.87	494
60	-	-	-	18-7⅞	25-6⅞	17-4⅞	2-6	4	26-5	20	9-10	5	7-1	4	3-9	1	18-9	1	19-9	1	20-9	1	21-9	1	22-9	1	23-9	1	24-9	1	25-9	1	26-1												7.03	596
66	-	-	-	20-4¼	28-2⅝	19-0⅝	2-9	4	28-10	21	10-10	5	7-10	4	4-3	1	20-6	1	21-6	1	22-6	1	23-6	1	24-6	1	25-6	1	26-6	1	27-6	1	28-6	1	28-9										9.19	738
72	-	-	-	22-1⅛	30-6¼	20-8¼	3-0	4	32-2	23	11-6	6	8-6	4	4-7	1	22-3	1	23-3	1	24-3	1	25-3	1	26-3	1	27-3	1	28-3	1	29-3	1	31-3	1	32-1										11.33	855
84	3-2	24-10	15-8	25-6¾	35-1½	23-11½	3-6	4	36-10	27	12-10	6	9-8	4	5-3	1	25-9	1	26-9	1	27-9	1	28-9	1	29-9	1	31-9	1	32-9	1	33-9	1	34-9	1	35-9	1	36-9	1	36-10						15.69	1152
96	3-6	28-2	17-7	28-10	39-9⅝	27-2⅝	4-0	4	41-2	30	14-3	7	10-9	4	5-9	1	29-0	1	30-0	1	32-0	1	33-0	1	34-0	1	35-0	1	36-0	1	37-0	1	38-0	1	39-0	1	40-0	1	41-0	1	41-6				19.51	1421
108	4-0	31-7	19-6	32-3⅝	44-7	30-6	4-6	4	45-10	34	15-9	7	12-0	4	6-4	1	33-6	1	34-6	1	35-6	1	36-6	1	37-6	1	38-6	1	39-6	1	40-6	1	41-6	1	42-6	1	43-6	1	44-6	1	45-6	1	46-4		26.56	1866

DIMENSIONS AND REINFORCING FOR FLARED HEADWALL FOR TRIPLE LINE PIPE CULVERT

PIPE DIA	DIMENSIONS A	B	E	G	X	Y	Z	REINFORCING STEEL A NO	A LGTH	B NO	B LGTH	C NO	C LGTH	D NO	D LGTH	J1 NO	J1 LGTH	J2 NO	J2 LGTH	J3 NO	J3 LGTH	J4 NO	J4 LGTH	J5 NO	J5 LGTH	J6 NO	J6 LGTH	J7 NO	J7 LGTH	J8 NO	J8 LGTH	J9 NO	J9 LGTH	J10 NO	J10 LGTH	J11 NO	J11 LGTH	J12 NO	J12 LGTH	J13 NO	J13 LGTH	J14 NO	J14 LGTH	PAY QTY 1-HEADWALL CONC CU YDS	STEEL LBS
15	-	-	-	9-8	11-0½	8-5½	1-0	4	13-0	11	4-3	4	2-8	6	1-10	1	9-10	1	10-10	1	11-7																							1.33	131
18	-	-	-	10-6⅞	12-4	9-4	1-0	4	14-3	12	4-8	4	3-0	6	2-0	1	10-8	1	11-8	1	12-8	1	12-10																						1.70	155
24	-	-	-	12-6⅞	15-2¼	11-4¼	1-0	4	16-10	14	5-6	4	3-7	6	2-3	1	12-9	1	13-9	1	14-9	1	15-8																						2.39	206
30	-	-	-	15-3½	18-7	14-1	1-3	4	20-2	16	6-2	6	4-2	6	2-6	1	15-6	1	16-6	1	17-6	1	18-6	1	19-1																				3.25	269
36	-	-	-	17-9	21-9½	16-6½	1-6	4	23-2	19	6-11	6	4-9	6	2-9	1	17-11	1	18-11	1	19-11	1	20-11	1	21-11	1	22-3																		4.23	356
42	-	-	-	20-4¼	25-8¾	19-1¾	1-9	4	26-4	21	7-7	6	5-4	6	3-0	1	20-6	1	21-6	1	22-6	1	23-6	1	24-6	1	25-6																		5.32	417
48	-	-	-	22-11⅞	28-4⅞	21-8⅞	2-0	4	29-7	24	8-4	6	5-11	6	3-3	1	23-2	1	24-2	1	25-2	1	26-2	1	27-2	1	28-2	1	28-11																6.58	527
54	-	-	-	25-10	31-11½	24-7½	2-3	4	34-0	27	9-0	8	6-6	6	3-6	1	26-0	1	27-0	1	28-0	1	29-0	1	30-0	1	32-0	1	33-0	1	33-6														7.94	642
60	-	-	-	28-5¼	35-4¾	27-2¾	2-6	4	37-3	29	9-10	8	7-1	6	3-9	1	28-7	1	29-7	1	31-7	1	32-7	1	33-7	1	34-7	1	35-7	1	36-7	1	36-11												9.53	767
66	-	-	-	31-1⅝	38-11⅛	29-9⅛	2-9	4	40-8	32	10-10	8	7-10	6	4-3	1	32-4	1	33-4	1	34-4	1	35-4	1	36-4	1	37-4	1	38-4	1	39-4	1	40-4	1	40-6										12.44	936
72	-	-	-	33-10	42-3	32-5	3-0	4	43-11	35	11-6	10	8-6	6	4-7	1	35-0	1	36-0	1	37-0	1	38-0	1	39-0	1	40-0	1	41-0	1	42-0	1	43-0	1	43-10										15.35	1092
84	3-2	38-6	29-4	39-2¾	48-9⅞	37-7⅞	3-6	4	50-6	40	12-10	10	9-8	6	5-3	1	40-5	1	41-5	1	42-5	1	43-5	1	44-5	1	45-5	1	46-5	1	47-5	1	48-5	1	49-5	1	50-5								20.99	1412
96	3-6	43-9	33-2	44-5⅞	55-4¾	42-9¾	4-0	4	56-9	45	14-3	14	10-9	6	5-9	1	45-7	1	46-7	1	47-7	1	48-7	1	49-7	1	50-7	1	51-7	1	52-7	1	53-7	1	54-7	1	55-7	1	56-7	1	57-1				26.17	1800
108	4-0	49-1	37-0	49-9⅞	62-1	48-0	4-6	4	64-4	50	15-9	14	12-0	6	6-4	1	51-0	1	52-0	1	53-0	1	54-0	1	55-0	1	56-0	1	57-0	1	58-0	1	59-0	1	60-0	1	62-0	1	63-0	1	64-0	1	64-10		35.42	2320

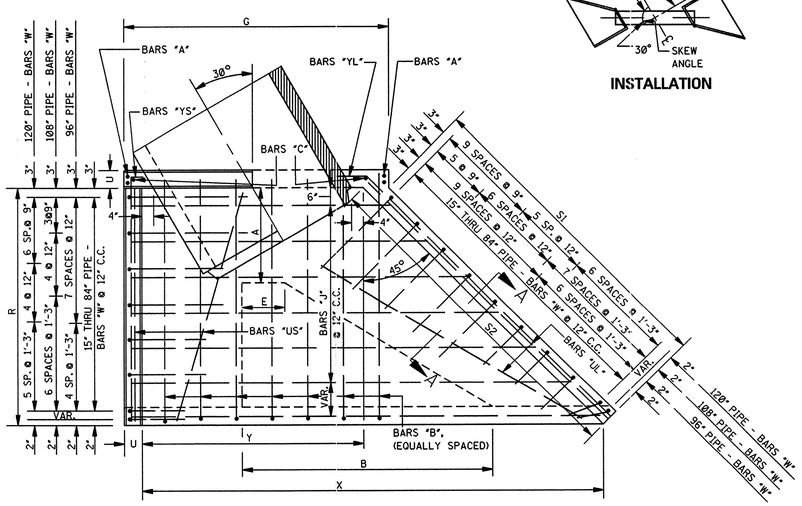

PLAN

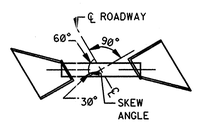

INSTALLATION

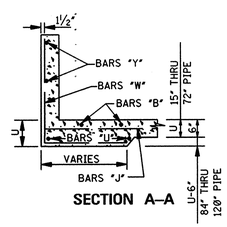

SECTION A–A

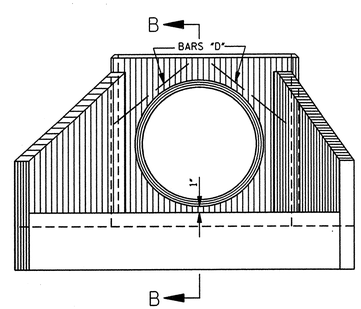

FRONT ELEVATION

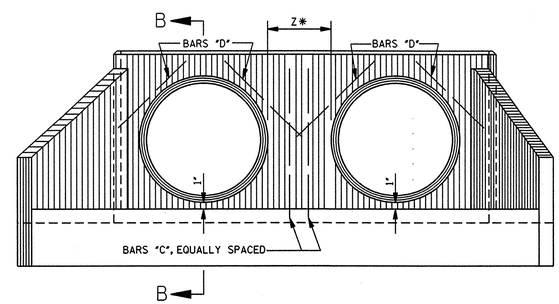

FRONT ELEVATION

*NOTE: MEASURE NORMAL (PERPENDICULAR) TO PIPE.

| DAT

STATE	PROJECT NO.
MISS.	

DIMENSIONS AND REINFORCING COMMON TO FLARED HEADWALLS FOR SINGLE, DOUBLE AND TRIPLE LINE PIPE CULVERTS

Dimensions, Reinforcing Steel: US, UL, W1, W2

PIPE DIA	MIN THK "T"	C	H	R	S1	S2	U	W	US NO	US LGTH	UL NO	UL LGTH	W1 S NO	W1 L NO	W1 SIZE	W1 X	W1 X1	W1 LGTH	W2 S NO	W2 L NO	W2 SIZE	W2 X	W2 X1	W2 LGTH
15	2¼	7	2-5	2-7	4-3⅝	5-2	6	0-8	2	2-7	2	4-2	2	3	#4	1-1	1-8	2-9	2	2	#4	1-0	1-0	2-0
18	2½	7	2-9½	3-0	5-1⅝	6-0	6	0-10	2	3-0	2	5-0	2	3	#4	1-3	2-0	3-3	2	3	#4	1-0	1-0	2-0
24	3	7	3-4½	3-10	6-9⅝	7-8	6	1-0	2	3-10	2	6-7	2	3	#4	1-8	2-7	4-3	2	4	#4	1-4	1-7	2-11
30	3½	7	3-11½	4-6	8-1⅝	9-0	6	1-3	2	4-6	2	8-0	2	3	#4	2-1	3-2	5-3	2	4	#4	1-7	2-2	3-9
36	4	7½	4-6½	5-3	9-7⅝	10-6	6	1-5	2	5-3	2	9-6	2	3	#5	2-5	3-9	6-2	2	4	#4	2-0	2-9	4-9
42	4½	7½	5-1½	5-11	10-11⅝	11-10	6	1-8	2	5-11	2	10-9	2	3	#5	2-11	4-4	7-3	2	4	#4	2-3	3-4	5-7
48	5	7½	5-8½	6-8	12-5⅝	13-4	6	1-10½	2	6-8	2	12-4	2	3	#5	3-1	4-10	7-11	2	4	#5	2-8	3-10	6-6
54	5½	8	6-3½	7-4	13-9⅝	14-8	6	2-1	2	7-4	2	13-8	2	3	#5	3-6	5-4	8-10	2	4	#5	3-0	4-4	7-4
60	6	8	6-10½	8-2	15-5⅝	16-4	6	2-3	2	8-2	2	15-4	2	3	#5	3-10	5-11	9-9	2	4	#5	3-3	4-11	8-2
66	6½	8	7-7	9-2	17-4¾	18-4	6½	2-6½	2	9-2	2	17-3	2	3	#6	4-3	6-8	10-11	2	4	#5	3-8	5-8	9-4
72	7	8	8-2	9-10	18-8	19-8	7	2-9	2	9-10	2	18-6	2	3	#6	4-9	7-5	12-2	2	4	#6	4-2	6-5	10-7
84	8	8	9-4	11-2	21-2⅛	22-4	8	3-2	2	11-2	2	21-0	2	3	#6	5-5	8-7	14-0	2	4	#6	5-2	7-7	12-9
96	9	8	10-5	12-7	24-0⅛	25-2	8	3-6	2	12-7	2	23-10	2	3	#7	5-7	9-6	15-1	1	4	#7	5-7	8-6	14-1
108	10	8	11-7	14-1	26-10⅜	28-2	9	4-0	2	14-1	2	26-8	2	4	#7	6-5	10-9	17-2	2	5	#7	6-5	9-9	16-2

Reinforcing Steel: W3, W4, W5

PIPE DIA	W3 S NO	W3 L NO	W3 SIZE	W3 X	W3 X1	W3 LGTH	W4 S NO	W4 L NO	W4 SIZE	W4 X	W4 X1	W4 LGTH	W5 S NO	W5 L NO	W5 SIZE	W5 X	W5 X1	W5 LGTH
15																		
18																		
24	1	1	#4	1-0	1-2	2-2												
30	2	2	#4	1-1	1-3	2-4												
36	2	3	#4	1-2	1-9	2-11												
42	2	4	#4	1-7	2-4	3-11	1	1	#4	1-2	1-10	3-0						
48	2	4	#4	1-10	2-10	4-8	2	2	#4	1-3	2-0	3-3						
54	2	4	#4	2-3	3-4	5-7	2	3	#4	1-7	2-4	3-11						
60	2	4	#5	2-6	3-11	6-5	2	3	#4	1-10	2-11	4-9	1	2	#4	1-8	2-5	4-1
66	2	4	#5	3-2	4-8	7-10	2	3	#5	2-7	3-8	6-3	2	4	#4	1-10	2-8	4-6
72	2	4	#5	3-6	5-5	8-11	2	3	#5	2-10	4-5	7-3	2	4	#4	2-0	3-5	5-5
84	2	4	#6	4-6	6-7	11-1	2	3	#5	3-9	5-7	9-4	2	4	#5	3-2	4-7	7-9
96	3	4	#6	5-0	7-6	12-6	2	3	#5	4-4	6-6	10-10	1	3	#5	3-8	5-6	9-2
108	2	4	#7	5-10	8-9	14-7	2	3	#6	5-2	7-9	12-11	2	3	#5	4-6	6-9	11-3

Reinforcing Steel: W6, W7, W8

PIPE DIA	W6 S NO	W6 L NO	W6 SIZE	W6 X	W6 X1	W6 LGTH	W7 S NO	W7 L NO	W7 SIZE	W7 X	W7 X1	W7 LGTH	W8 S NO	W8 L NO	W8 SIZE	W8 X	W8 X1	W8 LGTH
15																		
18																		
24																		
30																		
36																		
42																		
48																		
54																		
60																		
66																		
72	1	1	#4	1-9	3-0	4-9												
84	2	4	#5	2-6	3-7	6-1												
96	2	3	#5	3-0	4-6	7-6	2	3	#5	2-3	3-4	5-7						
108	1	3	#5	3-10	5-9	9-7	2	4	#5	3-2	4-9	7-11	1	1	#5	2-10	4-5	7-3

Reinforcing Steel: YS1 – YS8

PIPE DIA	YS1 NO	YS1 LGTH	YS2 NO	YS2 LGTH	YS3 NO	YS3 LGTH	YS4 NO	YS4 LGTH	YS5 NO	YS5 LGTH	YS6 NO	YS6 LGTH	YS7 NO	YS7 LGTH	YS8 NO	YS8 LGTH
15	1	2-4	1	3-5												
18	1	2-4	1	3-10												
24	1	2-4	1	4-4	1	4-8										
30	1	2-4	1	4-4	1	5-4										
36	1	2-4	1	4-4	2	6-1										
42	1	2-4	1	4-4	1	6-4	1	6-9								
48	1	2-4	1	4-4	1	6-4	2	7-6								
54	1	2-4	1	4-4	1	6-4	3	8-2								
60	1	2-4	1	4-4	1	6-4	1	8-4	2	9-0						
66	1	2-4	1	4-4	1	6-4	1	8-4	3	10-0						
72	1	2-4	1	4-4	1	6-4	1	8-4	1	10-4	2	10-8				
84	1	2-4	1	4-4	1	6-4	1	8-4	1	10-4	3	12-0				
96	1	2-4	1	3-4	1	6-4	1	8-4	1	9-7	1	12-1	3	13-5		
108	1	2-3	1	3-9	1	5-9	1	7-9	1	10-3	1	11-6	1	14-0	4	15-0

Reinforcing Steel: YL1 – YL8

PIPE DIA	YL1 NO	YL1 LGTH	YL2 NO	YL2 LGTH	YL3 NO	YL3 LGTH	YL4 NO	YL4 LGTH	YL5 NO	YL5 LGTH	YL6 NO	YL6 LGTH	YL7 NO	YL7 LGTH	YL8 NO	YL8 LGTH
15	1	3-9	1	5-5												
18	1	3-9	1	6-3												
24	1	3-9	1	7-9	1	7-11										
30	1	3-9	1	7-9	1	9-3										
36	1	3-9	1	7-9	2	10-9										
42	1	3-9	1	7-9	1	11-9	1	12-1								
48	1	3-9	1	7-9	1	11-9	2	13-7								
54	1	3-9	1	7-9	1	11-9	1	14-9	1	14-11						
60	1	3-9	1	7-9	1	11-9	1	14-9	2	16-7						
66	1	3-11	1	7-11	1	11-11	1	14-11	3	18-9						
72	1	3-11	1	7-11	1	11-11	1	14-11	1	18-11	2	20-0				
84	1	4-1	1	8-1	1	12-1	1	15-1	1	19-1	3	22-8				
96	1	4-1	1	8-1	1	12-1	1	15-1	1	18-10	1	19-7	3	25-6		
108	1	4-3	1	8-0	1	12-0	1	15-0	1	18-9	1	22-6	1	27-6	4	29-6

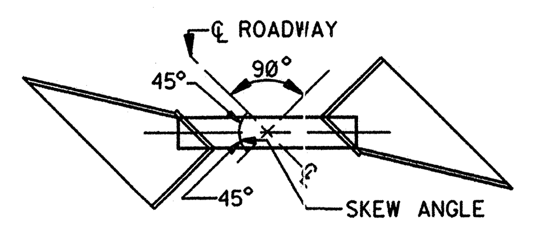

INSTALLATION

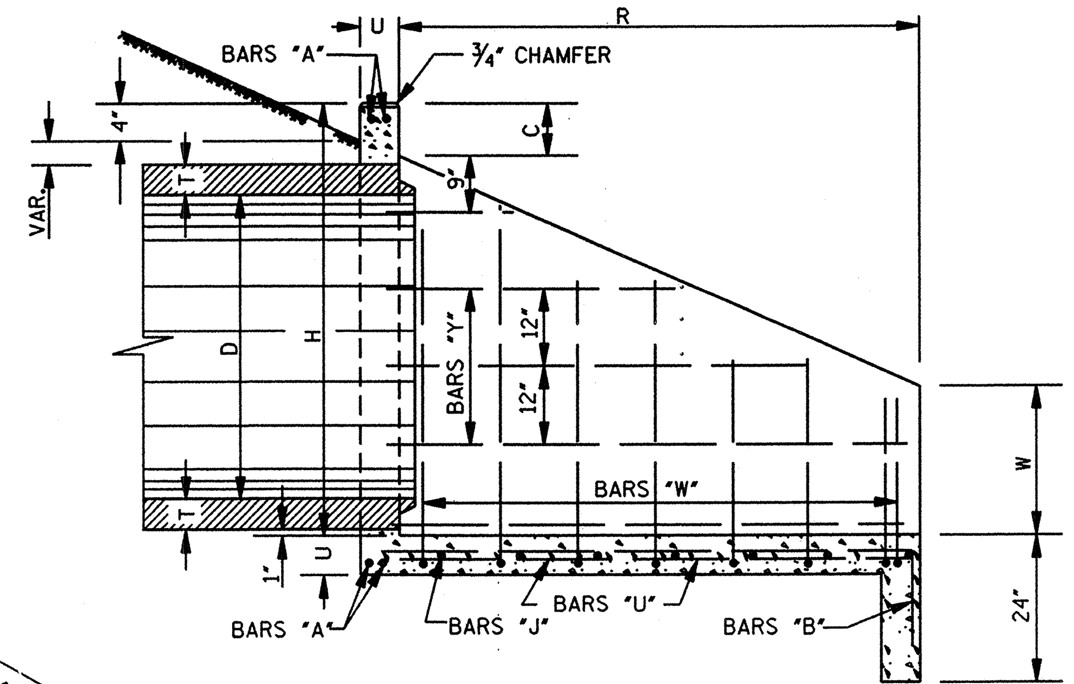

SECTION B–B

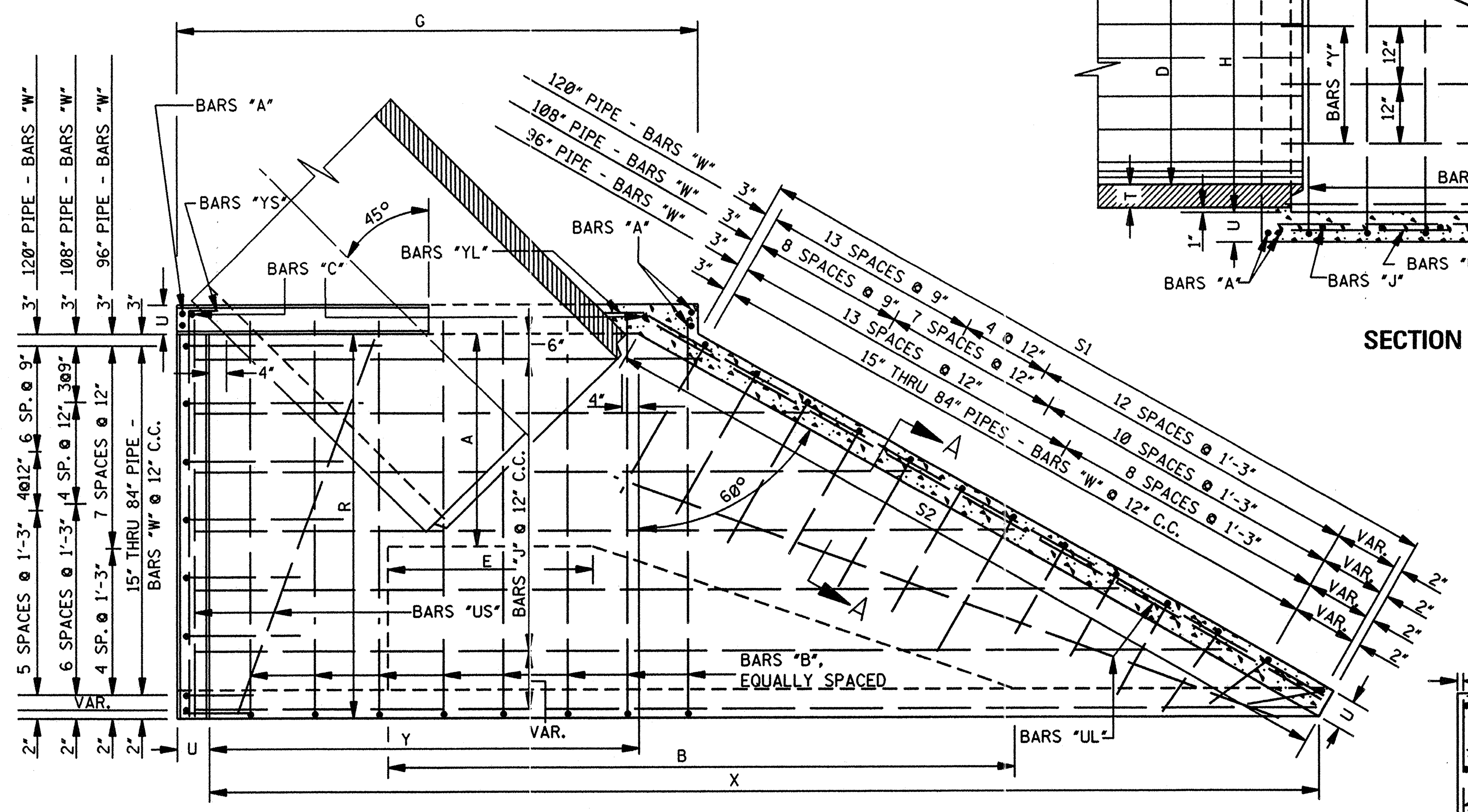

PLAN

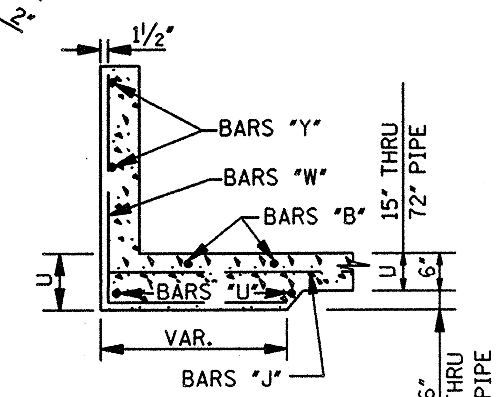

SECTION A–A

DIMENSIONS AND REINFORCING FOR FLARED HEADWALL FOR SINGLE LINE PIPE CULVERT

PIPE DIA	A	B	E	G	X	Y	Z	A NO	A LGTH	B NO	B LGTH	C NO	C LGTH	D NO	D LGTH
15	-	-	-	4-4⅞	7-4⅝	2-10⅞	-	4	7-9	5	4-3	2	2-8	2	1-10
18	-	-	-	4-9⅛	8-5½	3-3⅛	-	4	8-6	5	4-8	2	3-0	2	2-0
24	-	-	-	5-7	10-8⅝	4-1	-	4	9-10	6	5-6	2	3-7	2	2-3
30	-	-	-	6-5⅝	12-9⅛	4-11½	-	4	11-4	7	6-2	2	4-2	2	2-6
36	-	-	-	7-2¾	14-10	5-8⅞	-	4	12-8	8	6-11	2	4-9	2	2-9
42	-	-	-	8-0¾	16-9⅝	6-6¾	-	4	14-2	8	7-7	2	5-4	2	3-0
48	-	-	-	8-10⅝	18-11¼	7-4⅝	-	4	15-6	9	8-4	2	5-11	2	3-3
54	-	-	-	9-9⅞	21-0¼	8-3⅞	-	4	17-0	10	9-0	2	6-6	2	3-6
60	-	-	-	10-7¾	23-3½	9-1⅞	-	4	18-6	11	9-10	2	7-1	2	3-9
66	-	-	-	11-7¼	25-10¼	9-11⅝	-	4	20-1	12	10-10	2	7-10	2	4-3
72	-	-	-	12-6⅝	27-10	10-9⅝	-	4	21-8	13	11-6	2	8-6	2	4-7
84	3-2	19-4	3-0	14-5½	31-9½	12-5½	-	4	24-9	15	12-10	2	9-8	2	5-3
96	3-6	21-10	3-0	16-1⅛	35-10¾	14-1¼	-	4	27-5	17	14-3	2	10-9	2	5-9
108	4-0	24-5	3-0	18-0	40-1¾	15-9	-	4	31-6	19	15-9	2	12-0	2	6-4

PIPE DIA	J1 NO	J1 LGTH	J2 NO	J2 LGTH	J3 NO	J3 LGTH	J4 NO	J4 LGTH	J5 NO	J5 LGTH	J6 NO	J6 LGTH	J7 NO	J7 LGTH	J8 NO	J8 LGTH	J9 NO	J9 LGTH	J10 NO	J10 LGTH	J11 NO	J11 LGTH	J12 NO	J12 LGTH	J13 NO	J13 LGTH	J14 NO	J14 LGTH	PAY QTY 1-HEADWALL CONC CU YDS	STEEL LBS
15	1	4-11	1	6-8	1	8-0																							0.89	87
18	1	5-3	1	7-0	1	8-9	1	9-0																					1.14	104
24	1	6-1	1	7-10	1	9-6	1	11-3																					1.63	142
30	1	7-0	1	8-9	1	10-5	1	12-2	1	13-4																			2.15	180
36	1	7-9	1	9-6	1	11-2	1	12-11	1	14-8	1	15-5																	2.76	244
42	1	8-7	1	10-4	1	12-0	1	13-9	1	15-6	1	17-3	1	17-5															3.42	292
48	1	9-5	1	11-2	1	12-10	1	14-8	1	16-4	1	18-1	1	19-6															4.19	359
54	1	10-4	1	12-1	1	13-9	1	15-6	1	17-3	1	19-0	1	20-9	1	21-7													4.99	422
60	1	11-2	1	12-10	1	14-8	1	16-4	1	18-1	1	19-10	1	21-7	1	23-3	1	23-10											5.97	515
66	1	12-1	1	13-10	1	15-6	1	17-3	1	19-0	1	20-9	1	22-6	1	24-3	1	25-11	1	26-6									7.82	662
72	1	13-1	1	14-10	1	16-6	1	18-3	1	20-0	1	21-9	1	23-6	1	25-3	1	26-11	1	28-6									9.61	761
84	1	15-0	1	16-9	1	18-5	1	20-2	1	21-11	1	23-8	1	25-5	1	27-1	1	28-10	1	31-7	1	33-4	1	33-6					13.46	1040
96	1	16-7	1	18-4	1	20-0	1	21-9	1	23-6	1	25-3	1	27-0	1	28-8	1	31-5	1	33-2	1	34-11	1	36-8	1	37-7			16.69	1293
108	1	18-6	1	20-3	1	22-0	1	23-8	1	25-5	1	27-2	1	28-10	1	31-8	1	33-4	1	35-1	1	36-10	1	38-7	1	40-3	1	42-0	22.88	1755

DIMENSIONS AND REINFORCING FOR FLARED HEADWALL FOR DOUBLE LINE PIPE CULVERT

PIPE DIA	A	B	E	G	X	Y	Z	A NO	A LGTH	B NO	B LGTH	C NO	C LGTH	D NO	D LGTH
15	-	-	-	8-0¾	11-0½	6-6¾	1-0	4	11-5	8	4-3	4	2-8	4	1-10
18	-	-	-	8-9¼	12-5⅝	7-3¼	1-0	4	12-6	9	4-8	4	3-0	4	2-0
24	-	-	-	10-5	15-6⅝	8-11	1-0	4	14-9	11	5-6	4	3-7	4	2-3
30	-	-	-	12-6⅜	18-9⅞	11-0¼	1-3	4	17-5	13	6-2	5	4-2	4	2-6
36	-	-	-	14-5	22-0¼	12-11⅛	1-6	4	19-11	15	6-11	5	4-9	4	2-9
42	-	-	-	16-5¼	25-2⅛	14-11¼	1-9	4	22-5	17	7-7	5	5-4	4	3-0
48	-	-	-	18-5⅛	28-5¾	16-11⅛	2-0	4	25-1	19	8-4	6	5-11	4	3-3
54	-	-	-	20-8	31-10⅜	19-2	2-3	4	27-11	21	9-0	6	6-6	4	3-6
60	-	-	-	22-8	35-3¾	21-2⅛	2-6	4	31-6	23	9-10	7	7-1	4	3-9
66	-	-	-	24-9⅝	39-0⅝	23-2	2-9	4	34-3	25	10-10	8	7-10	4	4-3
72	-	-	-	26-11⅛	42-2½	25-2⅛	3-0	4	37-0	28	11-6	8	8-6	4	4-7
84	3-2	36-1	19-9	31-2¼	48-6¼	29-2¼	3-6	4	42-5	32	12-10	9	9-8	4	5-3
96	3-6	40-11	22-1	35-2¼	54-11⅛	33-2⅜	4-0	4	47-6	36	14-3	10	10-9	4	5-9
108	4-0	45-10	24-5	39-5⅜	61-7⅛	37-2⅜	4-6	4	52-11	40	15-9	11	12-0	4	6-4

PIPE DIA	J1 NO	J1 LGTH	J2 NO	J2 LGTH	J3 NO	J3 LGTH	J4 NO	J4 LGTH	J5 NO	J5 LGTH	J6 NO	J6 LGTH	J7 NO	J7 LGTH	J8 NO	J8 LGTH	J9 NO	J9 LGTH	J10 NO	J10 LGTH	J11 NO	J11 LGTH	J12 NO	J12 LGTH	J13 NO	J13 LGTH	J14 NO	J14 LGTH	PAY QTY 1-HEADWALL CONC CU YDS	STEEL LBS
15	1	8-7	1	10-4	1	11-8																							1.31	119
18	1	9-3	1	11-0	1	12-9	1	13-1																					1.65	145
24	1	10-11	1	12-8	1	14-5	1	16-1																					2.33	195
30	1	13-0	1	14-9	1	16-5	1	18-2	1	19-5																			3.14	253
36	1	14-11	1	16-8	1	18-4	1	20-1	1	21-10	1	22-7																	4.07	337
42	1	16-11	1	18-8	1	20-4	1	22-1	1	23-10	1	25-7	1	25-9															5.08	413
48	1	18-11	1	20-8	1	22-4	1	24-1	1	25-10	1	27-7	1	29-1															6.27	505
54	1	21-2	1	22-11	1	24-8	1	26-4	1	28-1	1	29-10	1	32-7	1	33-5													7.53	598
60	1	23-2	1	24-11	1	26-8	1	28-4	1	31-1	1	32-10	1	34-7	1	36-4	1	36-11											9.02	733
66	1	25-3	1	27-0	1	28-9	1	31-5	1	33-2	1	34-11	1	36-8	1	38-5	1	40-1	1	40-8									11.79	923
72	1	27-5	1	29-2	1	31-11	1	33-7	1	35-4	1	37-1	1	38-10	1	40-6	1	42-3	1	43-9									14.52	1059
84	1	32-8	1	34-5	1	36-2	1	37-10	1	39-7	1	41-4	1	43-1	1	44-9	1	46-6	1	48-3	1	50-0	1	50-2					19.95	1425
96	1	36-8	1	38-5	1	40-2	1	41-10	1	43-7	1	45-4	1	47-1	1	48-9	1	50-6	1	52-3	1	54-0	1	55-9	1	56-8			24.85	1761
108	1	40-11	1	42-8	1	44-5	1	46-1	1	47-10	1	49-7	1	51-4	1	53-0	1	54-9	1	56-6	1	58-3	1	60-0	1	62-9	1	63-6	33.73	2319

DIMENSIONS AND REINFORCING FOR FLARED HEADWALL FOR TRIPLE LINE PIPE CULVERT

PIPE DIA	A	B	E	G	X	Y	Z	A NO	A LGTH	B NO	B LGTH	C NO	C LGTH	D NO	D LGTH
15	-	-	-	11-8⅝	14-8⅜	10-2⅝	1-0	4	15-1	12	4-3	6	2-8	6	1-10
18	-	-	-	12-9⅜	16-5¾	11-3⅜	1-0	4	16-6	13	4-8	6	3-0	6	2-0
24	-	-	-	15-3	20-4⅝	13-9	1-0	4	19-7	16	5-6	6	3-7	6	2-3
30	-	-	-	18-7⅛	24-10⅝	17-1	1-3	4	23-6	19	6-2	8	4-2	6	2-6
36	-	-	-	21-7¼	29-2½	20-1⅜	1-6	4	27-1	22	6-11	8	4-9	6	2-9
42	-	-	-	24-9¾	33-6⅝	23-3¾	1-9	4	31-10	25	7-7	8	5-4	6	3-0
48	-	-	-	27-11⅝	38-0¼	26-5⅝	2-0	4	35-7	29	8-4	10	5-11	6	3-3
54	-	-	-	31-6⅛	42-8½	30-0⅛	2-3	4	39-9	32	9-0	10	6-6	6	3-6
60	-	-	-	34-8¼	47-4	33-2⅜	2-6	4	43-6	35	9-10	12	7-1	6	3-9
66	-	-	-	38-0	52-3	36-4⅜	2-9	4	47-6	39	10-10	14	7-10	6	4-3
72	-	-	-	41-3⅝	56-7	39-6⅝	3-0	4	51-5	42	11-6	14	8-6	6	4-7
84	3-2	52-10	36-6	47-11	65-3	45-11	3-6	4	59-2	48	12-10	16	9-8	6	5-3
96	3-6	60-0	41-2	54-3⅜	74-1	52-3½	4-0	4	67-8	55	14-3	18	10-9	6	5-9
108	4-0	67-30	45-10	60-10¾	83-0½	58-7¾	4-6	4	75-5	62	15-9	20	12-0	6	6-4

PIPE DIA	J1 NO	J1 LGTH	J2 NO	J2 LGTH	J3 NO	J3 LGTH	J4 NO	J4 LGTH	J5 NO	J5 LGTH	J6 NO	J6 LGTH	J7 NO	J7 LGTH	J8 NO	J8 LGTH	J9 NO	J9 LGTH	J10 NO	J10 LGTH	J11 NO	J11 LGTH	J12 NO	J12 LGTH	J13 NO	J13 LGTH	J14 NO	J14 LGTH	PAY QTY 1-HEADWALL CONC CU YDS	STEEL LBS
15	1	12-3	1	14-0	1	15-4																							1.74	154
18	1	13-3	1	15-0	1	16-9	1	17-1																					2.15	185
24	1	15-9	1	17-6	1	19-3	1	20-11																					3.04	247
30	1	19-1	1	20-10	1	22-6	1	24-3	1	25-6																			4.13	326
36	1	22-1	1	23-10	1	25-6	1	27-3	1	29-0	1	29-9																	5.37	431
42	1	25-4	1	27-1	1	28-9	1	31-6	1	33-3	1	35-0	1	35-2															6.75	536
48	1	28-6	1	31-3	1	33-0	1	34-8	1	36-5	1	38-2	1	39-8															8.35	658
54	1	33-0	1	34-9	1	36-5	1	38-2	1	39-11	1	41-8	1	43-5	1	44-3													10.06	780
60	1	36-2	1	37-11	1	39-8	1	41-4	1	43-1	1	44-10	1	46-7	1	48-3	1	48-10											12.07	948
66	1	39-6	1	41-3	1	43-0	1	44-8	1	46-5	1	48-2	1	49-11	1	51-8	1	53-4	1	53-11									15.76	1188
72	1	42-10	1	44-7	1	46-3	1	48-0	1	49-9	1	51-6	1	53-3	1	55-0	1	56-8	1	58-3									19.44	1343
84	1	49-5	1	51-2	1	52-10	1	54-8	1	56-4	1	58-1	1	59-10	1	62-6	1	64-3	1	66-0	1	67-9	1	67-11					26.44	1797
96	1	55-10	1	57-7	1	59-3	1	62-0	1	63-9	1	65-6	1	67-3	1	69-0	1	70-8	1	72-5	1	74-2	1	75-10	1	76-9			33.00	2237
108	1	63-5	1	65-2	1	66-11	1	68-7	1	70-4	1	72-1	1	73-10	1	75-7	1	77-3	1	79-0	1	80-9	1	82-6	1	84-2	1	85-11	44.58	2901

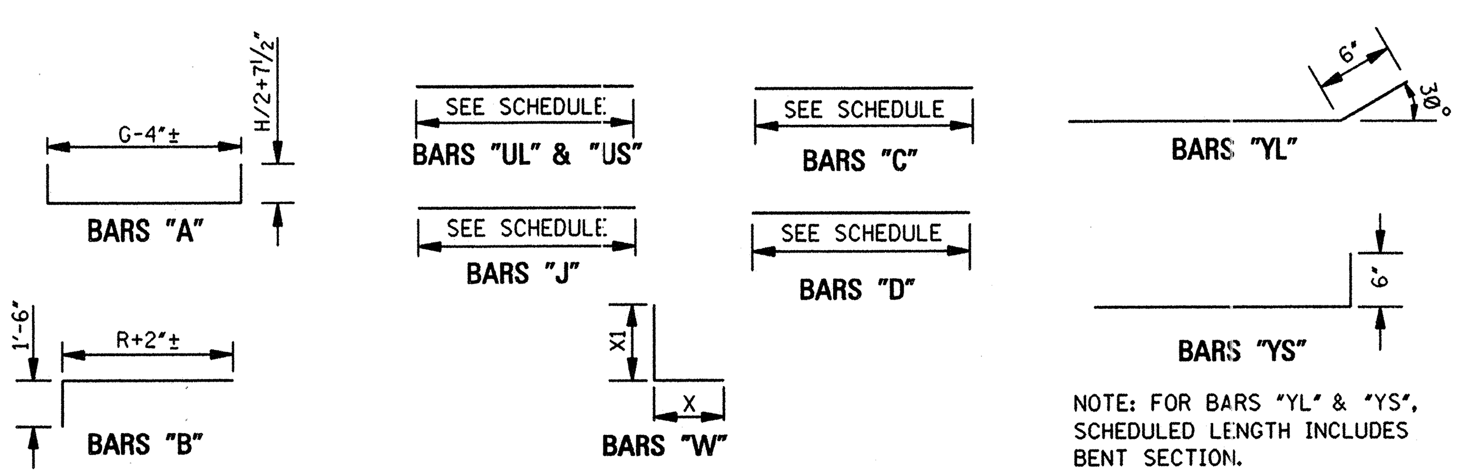

BAR BENDING DETAILS

NOTE: WHENEVER THE COMPUTED LENGTH OF BAR EXCEEDS 30', THE SCHEDULED LENGTH INCLUDES A 12" LAP. ALL BARS ARE #4 EXCEPT BARS "W". SEE SCHEDULE FOR SIZE OF BARS "W". IN BAR DESIGNATIONS (e.g. "YS" & "YL"), S DENOTES SHORT WING AND L DENOTES LONG WING.

GENERAL NOTES:

1. SPECIFICATIONS: MISSISSIPPI DEPARTMENT OF TRANSPORTATION, LATEST EDITION.
2. ALL CONCRETE SHALL BE CLASS "B".
3. ALL EXPOSED EDGES SHALL BE CHAMFERED ¾".
4. EXPOSED CONCRETE SURFACES SHALL BE FINISHED IN ACCORDANCE WITH THE APPLICABLE SECTION OF THE MDOT SPECIFICATIONS.
5. ALL LENGTHS AND QUANTITIES IN THE TABLES HEREON ARE BASED ON CONCRETE PIPE.
6. QUANTITIES SHOWN SHALL BE THE BASIS FOR FINAL PAYMENT UNLESS AUTHORIZED MODIFICATIONS ARE MADE.

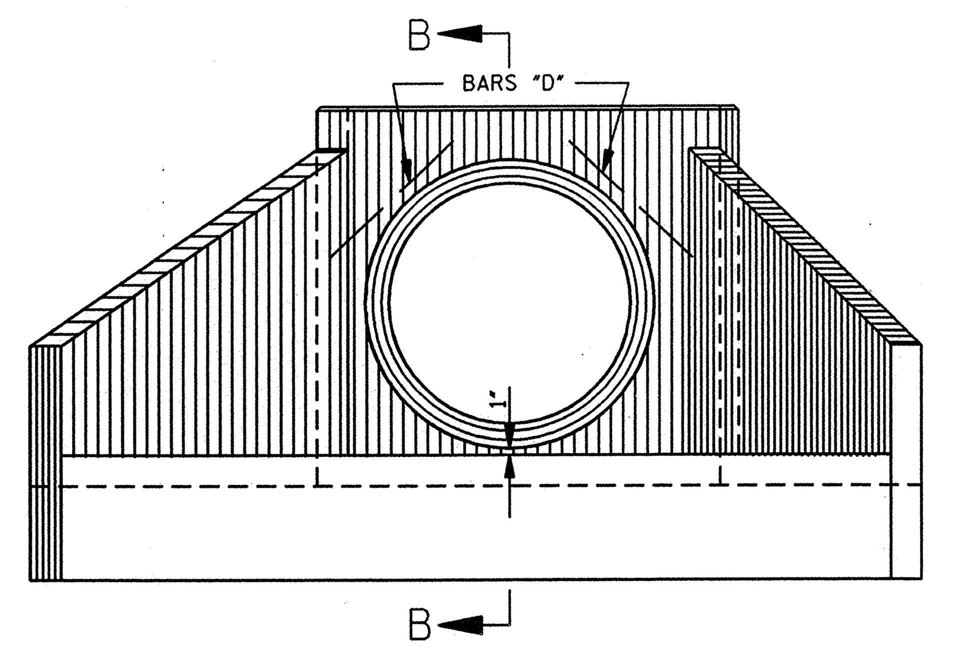

FRONT ELEVATION

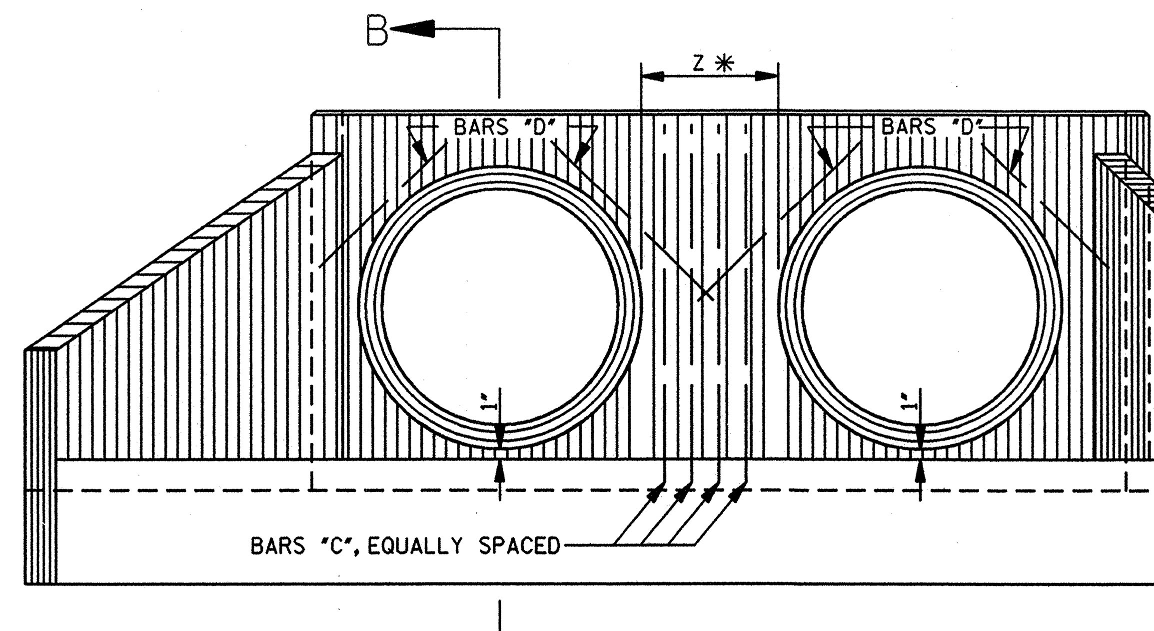

FRONT ELEVATION

✱NOTE: MEASURE NORMAL (PERPENDICULAR) TO PIPE.

BY	
REVISION	
DATE	

MISSISSIPPI DEPARTMENT OF TRANSPORTATION
ROADWAY DESIGN DIVISION
STANDARD PLAN

HEADWALLS FOR CONCRETE PIPE 2:1 SLOPE – 45° SKEW

DEPARTMENT OF TRANSPORTATION MISSISSIPPI — ENGLISH

WORKING NUMBER HW-2145

ISSUE DATE: OCTOBER 1, 1998

SHEET NUMBER 342

STATE	PROJECT NO.
MISS.	

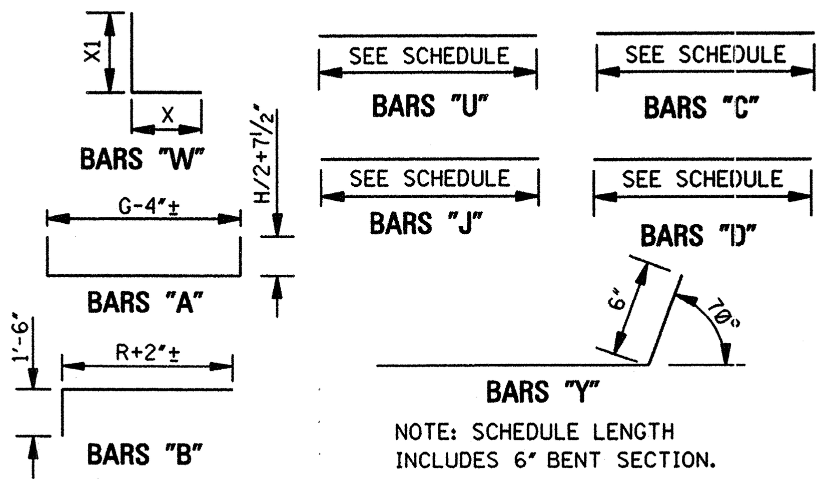

BAR BENDING DETAILS

NOTE: WHENEVER THE COMPUTED LENGTH OF BAR EXCEEDS 30', THE SCHEDULED LENGTH INCLUDES A 12" LAP. ALL BARS ARE #4 EXCEPT BARS "W". SEE SCHEDULE FOR SIZE OF BARS "W".

GENERAL NOTES:

1. SPECIFICATIONS: MISSISSIPPI DEPARTMENT OF TRANSPORTATION, LATEST EDITION.
2. ALL CONCRETE SHALL BE CLASS "B".
3. ALL EXPOSED EDGES SHALL BE CHAMFERED ¾".
4. EXPOSED CONCRETE SURFACES SHALL BE FINISHED IN ACCORDANCE WITH THE APPLICABLE SECTION OF THE MDOT SPECIFICATIONS.
5. ALL LENGTHS AND QUANTITIES IN THE TABLES HEREON ARE BASED ON CONCRETE PIPE.
6. QUANTITIES SHOWN SHALL BE THE BASIS FOR FINAL PAYMENT UNLESS AUTHORIZED MODIFICATIONS ARE MADE.

DIMENSIONS AND REINFORCING COMMON TO FLARED HEADWALLS FOR SINGLE, DOUBLE AND TRIPLE LINE PIPE CULVERTS

DIMENSIONS; REINFORCING STEEL U, W1, W2

PIPE DIA	MIN THK "T"	C	H	R	S1	S2	U	W	U NO	U LGTH	W1 NO	W1 SIZE	W1 X	W1 X1	W1 LGTH	W2 NO	W2 SIZE	W2 X	W2 X1	W2 LGTH
15	2¼	7	2-5	3-10½	3-11⅜	4-1½	6	0-8	4	3-10	4	#4	1-1	1-8	2-9	6	#4	1-0	0-10	1-10
18	2½	7	2-9½	4-6	4-7⅜	4-9½	6	0-10	4	4-5	4	#4	1-3	2-0	3-3	8	#4	1-0	1-0	2-0
24	3	7	3-4½	5-9	5-11¼	6-1⅜	6	1-0	4	5-9	4	#4	1-8	2-7	4-3	6	#4	1-4	1-7	2-11
30	3½	7	3-11½	6-9	7-0⅛	7-2¼	6	1-3	4	6-9	4	#4	2-1	3-2	5-3	6	#4	1-7	2-2	3-9
36	4	7½	4-6½	7-10½	8-2½	8-4⅝	6	1-5	4	8-1	4	#5	2-5	3-9	6-2	6	#4	2-0	2-9	4-9
42	4½	7½	5-1½	8-10½	9-3¼	9-5⅜	6	1-8	4	9-2	4	#5	2-11	4-4	7-3	6	#4	2-3	3-4	5-7
48	5	7½	5-8½	10-0	10-5⅝	10-7¾	6	1-10½	4	10-5	4	#5	3-1	4-10	7-11	6	#5	2-8	3-10	6-6
54	5½	8	6-3½	11-0	11-6⅜	11-8½	6	2-1	4	11-5	4	#5	3-6	5-4	8-10	6	#5	3-0	4-4	7-4
60	6	8	6-10½	12-3	12-10¼	13-0⅜	6	2-3	4	12-10	4	#5	3-10	5-11	9-9	6	#5	3-3	4-11	8-2
66	6½	8	7-7	13-9	14-5¼	14-7⅝	6½	2-6½	4	14-3	4	#6	4-3	6-8	10-11	6	#5	3-8	5-8	9-4
72	7	8	8-2	14-9	15-5⅞	15-8⅜	7	2-9	4	15-4	4	#6	4-9	7-5	12-2	6	#6	4-2	6-5	10-7
84	8	8	9-4	16-9	17-7	17-9⅞	8	3-2	4	17-7	2	#6	5-5	8-7	14-0	6	#6	5-2	7-7	12-9
96	9	8	10-5	19-3	20-3	20-5⅞	8	3-6	4	20-3	4	#7	5-7	9-6	15-1	6	#7	5-7	8-6	14-1
108	10	8	11-7	21-4	22-5¼	22-8½	9	4-0	4	22-5	6	#7	6-5	10-9	17-2	8	#7	6-5	9-9	16-2

REINFORCING STEEL W3, W4, W5

PIPE DIA	W3 NO	W3 SIZE	W3 X	W3 X1	W3 LGTH	W4 NO	W4 SIZE	W4 X	W4 X1	W4 LGTH	W5 NO	W5 SIZE	W5 X	W5 X1	W5 LGTH
15															
18															
24	2	#4	1-0	1-2	2-2										
30	6	#4	1-1	1-5	2-6										
36	8	#4	1-5	1-9	3-2										
42	8	#4	1-7	2-4	3-11	4	#4	1-3	1-8	2-11					
48	8	#4	2-0	2-10	4-10	4	#4	1-3	1-10	3-1					
54	8	#4	2-3	3-4	5-7	8	#4	1-8	2-4	4-0					
60	8	#5	2-6	3-11	6-5	6	#4	1-10	2-11	4-9	4	#4	1-4	1-11	3-3
66	8	#5	3-2	4-8	7-10	6	#5	2-7	3-8	6-3	6	#4	1-10	2-8	4-6
72	8	#5	3-6	5-5	8-11	6	#5	2-10	4-5	7-3	6	#4	2-0	3-5	5-5
84	8	#6	4-6	6-7	11-1	6	#5	3-9	5-7	9-4	6	#5	3-2	4-7	7-9
96	8	#6	5-0	7-6	12-6	6	#6	4-4	6-6	10-10	4	#5	3-8	5-6	9-2
108	6	#7	5-10	8-9	14-7	6	#7	5-2	7-9	12-11	6	#6	4-6	6-9	11-3

REINFORCING STEEL W6, W7, W8

PIPE DIA	W6 NO	W6 SIZE	W6 X	W6 X1	W6 LGTH	W7 NO	W7 SIZE	W7 X	W7 X1	W7 LGTH	W8 NO	W8 SIZE	W8 X	W8 X1	W8 LGTH
15															
18															
24															
30															
36															
42															
48															
54															
60															
66															
72	2	#4	2-0	3-0	5-0										
84	8	#5	2-6	3-7	6-1										
96	6	#5	3-0	4-6	7-6	4	#5	2-2	3-10	6-0					
108	6	#5	3-10	5-9	9-7	4	#5	3-2	4-9	7-11	2	#5	3-1	4-6	7-7

REINFORCING STEEL Y1–Y8

PIPE DIA	Y1 NO	Y1 LGTH	Y2 NO	Y2 LGTH	Y3 NO	Y3 LGTH	Y4 NO	Y4 LGTH	Y5 NO	Y5 LGTH	Y6 NO	Y6 LGTH	Y7 NO	Y7 LGTH	Y8 NO	Y8 LGTH
15	2	2-8	2	5-0												
18	2	2-8	2	5-8												
24	2	2-8	2	7-0												
30	2	2-8	2	6-3	2	8-1										
36	2	2-8	2	5-9	2	9-3										
42	2	2-8	2	5-9	2	9-9	2	10-4								
48	2	2-8	2	5-9	2	9-9	4	11-7								
54	2	2-8	2	5-9	2	9-9	4	12-7								
60	2	2-8	2	5-9	2	9-9	2	12-9	4	14-1						
66	2	2-9	2	5-9	2	9-9	2	12-9	6	15-8						
72	2	2-9	2	5-9	2	9-9	2	12-9	2	15-9	4	16-8				
84	2	2-9	2	6-0	2	9-1	2	12-5	2	15-7	6	18-5				
96	2	2-6	2	5-6	2	9-6	2	12-6	2	15-0	2	18-9	6	21-2		
108	2	3-0	2	6-0	2	9-0	2	12-0	2	15-9	2	19-6	2	22-0	8	23-4

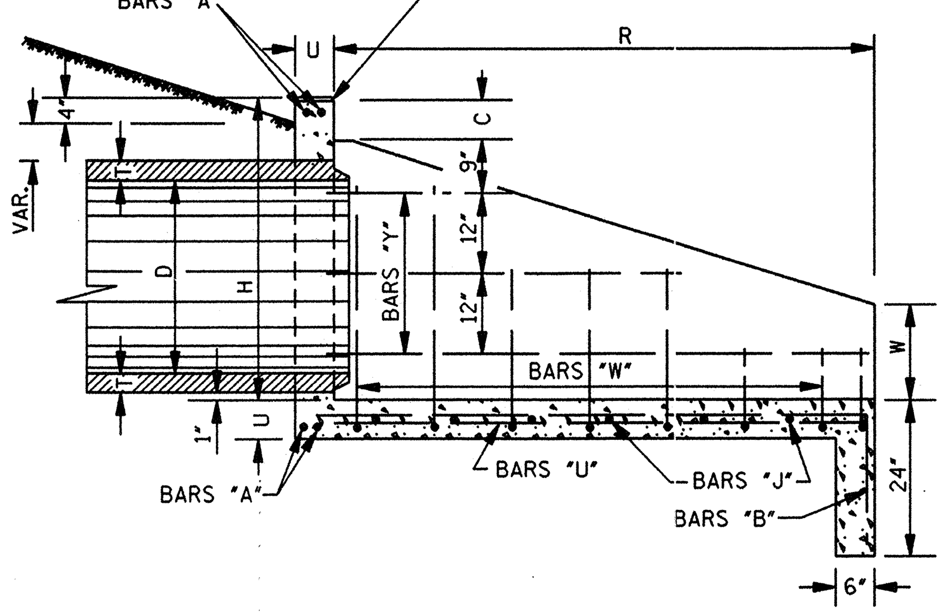

SECTION B–B

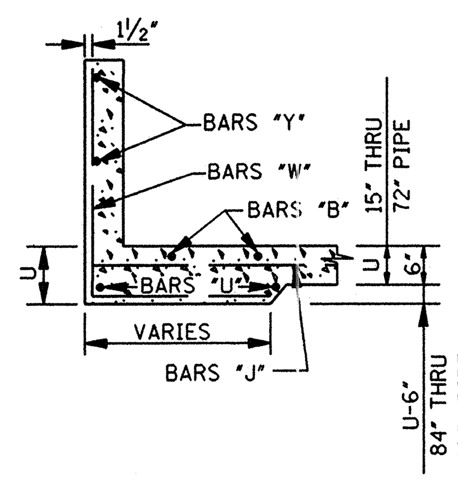

SECTION A–A

DIMENSIONS AND REINFORCING FOR FLARED HEADWALL FOR SINGLE LINE PIPE CULVERT

DIMENSIONS

PIPE DIA	A	B	E	G	X	Y	Z
15	-	-	-	3-3¾	5-0⅛	2-3	-
18	-	-	-	3-6¾	5-9¼	2-6	-
24	-	-	-	4-1¾	7-3¼	3-1	-
30	-	-	-	4-9¼	8-7½	3-8½	-
36	-	-	-	5-3¾	9-11¾	4-3	-
42	-	-	-	5-10¾	11-3½	4-10	-
48	-	-	-	6-5¾	12-8¼	5-5	-
54	-	-	-	7-1¾	14-1⅛	6-1	-
60	-	-	-	7-8¾	15-7	6-8	-
66	-	-	-	8-4⅞	17-3⅛	7-3	-
72	-	-	-	9-0⅞	18-6⅞	7-10	-
84	3-6	15-9	2-0	10-5	21-2⅜	9-0	-
96	4-0	18-0	2-0	11-7	24-2⅛	10-2	-
108	4-6	20-3	2-0	12-11⅛	26-10⅜	11-4	-

REINFORCING STEEL A–D, J1–J8

PIPE DIA	A NO	A LGTH	B NO	B LGTH	C NO	C LGTH	D NO	D LGTH	J1 NO	J1 LGTH	J2 NO	J2 LGTH	J3 NO	J3 LGTH	J4 NO	J4 LGTH	J5 NO	J5 LGTH	J6 NO	J6 LGTH	J7 NO	J7 LGTH	J8 NO	J8 LGTH
15	4	6-8	4	5-6	2	2-8	2	1-10	1	3-2	1	3-10	1	4-7	1	5-4	1	5-5						
18	4	7-3	5	6-2	2	3-0	2	2-0	1	3-5	1	4-2	1	4-10	1	5-7	1	6-2						
24	4	8-5	5	7-5	2	3-7	2	2-3	1	3-11	1	4-8	1	5-4	1	6-1	1	6-10	1	7-7				
30	4	9-8	6	8-5	2	4-2	2	2-6	1	4-9	1	5-5	1	6-2	1	6-10	1	7-7	1	8-3	1	9-0		
36	4	10-9	7	9-6	2	4-9	2	2-9	1	5-2	1	5-11	1	6-8	1	7-4	1	8-1	1	8-10	1	9-6	1	10-3
42	4	11-11	7	10-6	2	5-4	2	3-0	1	5-9	1	6-6	1	7-2	1	7-11	1	8-8	1	9-4	1	10-1	1	10-10
48	4	13-1	8	11-8	2	5-11	2	3-3	1	6-4	1	7-0	1	7-9	1	8-6	1	9-3	1	9-11	1	10-8	1	11-5
54	4	14-4	8	12-8	2	6-6	2	3-6	1	7-0	1	7-8	1	8-5	1	9-2	1	9-11	1	10-7	1	11-4	1	12-1
60	4	15-6	9	13-11	2	7-1	2	3-9	1	7-6	1	8-3	1	9-0	1	9-9	1	10-6	1	11-2	1	11-11	1	12-8
66	4	16-11	9	15-5	2	7-10	2	4-3	1	8-3	1	8-11	1	9-8	1	10-4	1	11-1	1	11-10	1	12-7	1	13-4
72	4	18-2	10	16-5	2	8-6	2	4-7	1	8-9	1	9-6	1	10-3	1	11-0	1	11-9	1	12-6	1	13-3	1	13-11
84	4	20-8	11	18-5	2	9-8	2	5-3	1	10-2	1	10-10	1	11-7	1	12-4	1	13-0	1	13-9	1	14-5	1	15-2
96	4	22-11	12	20-11	2	10-9	2	5-9	1	11-7	1	12-4	1	13-1	1	13-9	1	14-6	1	15-3	1	16-0	1	16-8
108	4	25-5	14	23-0	2	12-0	2	6-4	1	12-11	1	13-8	1	14-4	1	15-1	1	15-10	1	16-7	1	17-3	1	18-0

REINFORCING STEEL J9–J22; PAY QTY 1-HEADWALL

PIPE DIA	J9 NO	J9 LGTH	J10 NO	J10 LGTH	J11 NO	J11 LGTH	J12 NO	J12 LGTH	J13 NO	J13 LGTH	J14 NO	J14 LGTH	J15 NO	J15 LGTH	J16 NO	J16 LGTH	J17 NO	J17 LGTH	J18 NO	J18 LGTH	J19 NO	J19 LGTH	J20 NO	J20 LGTH	J21 NO	J21 LGTH	J22 NO	J22 LGTH	CONC CU YDS	STEEL LBS
15																													0.83	88
18																													1.04	105
24																													1.52	131
30																													2.03	180
36	1	10-4																											2.62	236
42	1	11-7	1	11-8																									3.26	295
48	1	12-2	1	12-10	1	13-0																							4.02	375
54	1	12-10	1	13-6	1	14-3	1	14-5																					4.81	430
60	1	13-5	1	14-2	1	14-10	1	15-7	1	16-0																			5.78	530
66	1	14-1	1	14-9	1	15-6	1	16-3	1	16-11	1	17-8																	7.63	662
72	1	14-8	1	15-5	1	16-2	1	16-11	1	17-7	1	18-4	1	19-1															9.41	778
84	1	15-11	1	16-7	1	17-4	1	18-1	1	18-10	1	19-7	1	20-4	1	21-0	1	21-9											13.06	1009
96	1	17-5	1	18-2	1	18-10	1	19-7	1	20-4	1	21-1	1	21-10	1	22-6	1	23-3	1	24-0	1	24-8	1	25-2					16.67	1377
108	1	18-9	1	19-5	1	20-2	1	20-11	1	21-8	1	22-4	1	23-1	1	23-10	1	24-7	1	25-3	1	26-0	1	26-9	1	27-5	1	28-0	22.75	1940

DIMENSIONS AND REINFORCING FOR FLARED HEADWALL FOR DOUBLE LINE PIPE CULVERT

DIMENSIONS

PIPE DIA	A	B	E	G	X	Y	Z
15	-	-	-	5-10¾	7-7⅞	4-10	1-0
18	-	-	-	6-4¾	8-7¼	5-4	1-0
24	-	-	-	7-6¾	10-8¼	6-6	1-0
30	-	-	-	9-0¾	12-11	8-0	1-3
36	-	-	-	10-4¾	15-0¾	9-4	1-6
42	-	-	-	11-9¾	17-2½	10-9	1-9
48	-	-	-	13-2¾	19-5¼	12-2	2-0
54	-	-	-	14-9¾	21-9⅛	13-9	2-3
60	-	-	-	16-2¾	24-1	15-2	2-6
66	-	-	-	17-8⅞	26-7⅛	16-7	2-9
72	-	-	-	19-2⅞	28-8⅞	18-0	3-0
84	3-0	27-7	13-10	22-3	33-0¾	20-10	3-6
96	3-0	31-6	15-6	25-1	37-8⅛	23-8	4-0
108	3-0	35-5	17-2	28-1⅛	42-0⅜	26-6	4-6

REINFORCING STEEL A–D, J1–J8

PIPE DIA	A NO	A LGTH	B NO	B LGTH	C NO	C LGTH	D NO	D LGTH	J1 NO	J1 LGTH	J2 NO	J2 LGTH	J3 NO	J3 LGTH	J4 NO	J4 LGTH	J5 NO	J5 LGTH	J6 NO	J6 LGTH	J7 NO	J7 LGTH	J8 NO	J8 LGTH
15	4	9-3	7	5-6	3	2-8	4	1-10	1	5-9	1	6-5	1	7-2	1	7-11	1	8-0						
18	4	10-1	8	6-2	3	3-0	4	2-0	1	6-3	1	7-0	1	7-8	1	8-5	1	9-0						
24	4	11-10	9	7-5	3	3-7	4	2-3	1	7-4	1	8-1	1	8-9	1	9-6	1	10-3	1	11-0				
30	4	13-11	10	8-5	4	4-2	4	2-6	1	9-0	1	9-8	1	10-5	1	11-1	1	11-10	1	12-6	1	13-3		
36	4	15-10	12	9-6	4	4-9	4	2-9	1	10-3	1	11-0	1	11-9	1	12-5	1	13-2	1	13-11	1	14-7	1	15-4
42	4	17-10	13	10-6	4	5-4	4	3-0	1	11-8	1	12-5	1	13-1	1	13-10	1	14-7	1	15-3	1	16-0	1	16-9
48	4	19-10	15	11-8	4	5-11	4	3-3	1	13-1	1	13-9	1	14-6	1	15-3	1	16-0	1	16-8	1	17-5	1	18-2
54	4	22-0	16	12-8	5	6-6	4	3-6	1	14-8	1	15-4	1	16-1	1	16-10	1	17-7	1	18-3	1	19-0	1	19-9
60	4	24-0	17	13-11	5	7-1	4	3-9	1	16-0	1	16-9	1	17-6	1	18-3	1	19-0	1	19-8	1	20-5	1	21-2
66	4	26-3	18	15-5	5	7-10	4	4-3	1	17-7	1	18-3	1	19-0	1	19-8	1	20-5	1	21-2	1	21-11	1	22-8
72	4	28-4	20	16-5	5	8-6	4	4-7	1	18-11	1	19-8	1	20-5	1	21-2	1	21-11	1	22-8	1	23-5	1	24-1
84	4	33-6	23	18-5	6	9-8	4	5-3	1	22-0	1	22-8	1	23-5	1	24-2	1	24-10	1	25-7	1	26-3	1	27-0
96	4	37-5	26	20-11	7	10-9	4	5-9	1	25-1	1	25-10	1	26-6	1	27-3	1	28-0	1	28-9	1	29-5	1	31-2
108	4	41-7	29	23-0	7	12-0	4	6-4	1	28-1	1	28-10	1	29-6	1	31-3	1	32-0	1	32-9	1	33-5	1	34-2

REINFORCING STEEL J9–J22; PAY QTY 1-HEADWALL

PIPE DIA	J9 NO	J9 LGTH	J10 NO	J10 LGTH	J11 NO	J11 LGTH	J12 NO	J12 LGTH	J13 NO	J13 LGTH	J14 NO	J14 LGTH	J15 NO	J15 LGTH	J16 NO	J16 LGTH	J17 NO	J17 LGTH	J18 NO	J18 LGTH	J19 NO	J19 LGTH	J20 NO	J20 LGTH	J21 NO	J21 LGTH	J22 NO	J22 LGTH	CONC CU YDS	STEEL LBS
15																													1.15	119
18																													1.43	139
24																													2.05	179
30																													2.77	243
36	1	15-5																											3.60	322
42	1	17-6	1	17-7																									4.51	403
48	1	18-11	1	19-7	1	19-9																							5.58	509
54	1	20-6	1	21-2	1	21-11	1	22-1																					6.70	597
60	1	21-11	1	22-8	1	23-4	1	24-1	1	24-6																			8.06	718
66	1	23-5	1	24-2	1	24-10	1	25-7	1	26-3	1	27-0																	10.72	889
72	1	24-10	1	25-7	1	26-4	1	27-1	1	27-9	1	28-6	1	29-3															13.34	1040
84	1	27-9	1	28-5	1	29-2	1	29-11	1	31-8	1	32-5	1	33-2	1	33-10	1	34-7											18.19	1361
96	1	31-11	1	32-7	1	33-4	1	34-1	1	34-10	1	35-6	1	36-3	1	37-0	1	37-9	1	38-5	1	39-2	1	39-10					24.00	1844
108	1	34-11	1	35-7	1	36-4	1	37-1	1	37-10	1	38-6	1	39-3	1	40-0	1	40-9	1	41-5	1	42-2	1	42-10	1	43-8	1	44-2	32.44	2498

DIMENSIONS AND REINFORCING FOR FLARED HEADWALL FOR TRIPLE LINE PIPE CULVERT

DIMENSIONS

PIPE DIA	A	B	E	G	X	Y	Z
15	-	-	-	8-5¾	10-2⅞	7-5	1-0
18	-	-	-	9-2¾	11-5¼	8-2	1-0
24	-	-	-	10-11¾	14-1¼	9-11	1-0
30	-	-	-	13-4¼	17-2½	12-3½	1-3
36	-	-	-	15-5¾	20-1¾	14-5	1-6
42	-	-	-	17-8¾	23-1½	16-8	1-9
48	-	-	-	19-11¾	26-2¼	18-11	2-0
54	-	-	-	22-5¾	29-5⅛	21-5	2-3
60	-	-	-	24-8¾	32-7	23-8	2-6
66	-	-	-	27-0⅞	35-11⅛	25-11	2-9
72	-	-	-	29-4⅞	38-10⅞	28-2	3-0
84	3-0	39-5	25-8	34-1	44-10⅜	32-8	3-6
96	3-0	45-0	29-0	38-7	51-2⅛	37-2	4-0
108	3-0	50-7	32-4	43-3⅛	57-2⅜	41-8	4-6

REINFORCING STEEL A–D, J1–J8

PIPE DIA	A NO	A LGTH	B NO	B LGTH	C NO	C LGTH	D NO	D LGTH	J1 NO	J1 LGTH	J2 NO	J2 LGTH	J3 NO	J3 LGTH	J4 NO	J4 LGTH	J5 NO	J5 LGTH	J6 NO	J6 LGTH	J7 NO	J7 LGTH	J8 NO	J8 LGTH
15	4	11-10	10	5-6	4	2-8	6	1-10	1	8-4	1	9-0	1	9-9	1	10-6	1	10-7						
18	4	12-11	11	6-2	4	3-0	6	2-0	1	9-1	1	9-10	1	10-6	1	11-3	1	11-10						
24	4	15-3	13	7-5	4	3-7	6	2-3	1	10-9	1	11-6	1	12-2	1	12-11	1	13-8	1	14-5				
30	4	18-3	14	8-5	6	4-2	6	2-6	1	13-3	1	13-11	1	14-8	1	15-4	1	16-1	1	16-9	1	17-6		
36	4	20-11	17	9-6	6	4-9	6	2-9	1	15-4	1	16-1	1	16-10	1	17-6	1	18-3	1	19-0	1	19-8	1	20-5
42	4	23-9	19	10-6	6	5-4	6	3-0	1	17-7	1	18-4	1	19-0	1	19-9	1	20-6	1	21-2	1	21-11	1	22-8
48	4	26-7	22	11-8	6	5-11	6	3-3	1	19-10	1	20-6	1	21-3	1	22-0	1	22-9	1	23-5	1	24-2	1	24-11
54	4	29-8	24	12-8	8	6-6	6	3-6	1	22-4	1	23-0	1	23-9	1	24-6	1	25-3	1	25-11	1	26-8	1	27-5
60	4	33-6	25	13-11	8	7-1	6	3-9	1	24-6	1	25-3	1	26-0	1	26-9	1	27-6	1	28-2	1	28-11	1	29-8
66	4	36-7	27	15-5	8	7-10	6	4-3	1	26-11	1	27-7	1	28-4	1	29-0	1	29-9	1	31-6	1	32-3	1	33-0
72	4	39-6	30	16-5	8	8-6	6	4-7	1	29-1	1	29-10	1	31-7	1	32-4	1	33-1	1	33-10	1	34-7	1	35-3
84	4	45-4	35	18-5	10	9-9	6	5-3	1	34-10	1	35-6	1	36-3	1	37-0	1	37-8	1	38-5	1	39-1	1	39-10
96	4	50-11	39	20-11	12	10-9	6	5-9	1	39-7	1	40-4	1	41-0	1	41-9	1	42-6	1	43-3	1	43-11	1	44-8
108	4	56-9	44	23-0	12	12-0	6	6-4	1	44-3	1	45-0	1	45-8	1	46-5	1	47-2	1	47-10	1	48-7	1	49-4

REINFORCING STEEL J9–J22; PAY QTY 1-HEADWALL

PIPE DIA	J9 NO	J9 LGTH	J10 NO	J10 LGTH	J11 NO	J11 LGTH	J12 NO	J12 LGTH	J13 NO	J13 LGTH	J14 NO	J14 LGTH	J15 NO	J15 LGTH	J16 NO	J16 LGTH	J17 NO	J17 LGTH	J18 NO	J18 LGTH	J19 NO	J19 LGTH	J20 NO	J20 LGTH	J21 NO	J21 LGTH	J22 NO	J22 LGTH	CONC CU YDS	STEEL LBS
15																													1.47	150
18																													1.82	173
24																													2.58	227
30																													3.51	305
36	1	20-6																											4.58	408
42	1	23-5	1	23-6																									5.76	512
48	1	25-8	1	26-4	1	26-6																							7.14	644
54	1	28-2	1	28-10	1	29-7	1	29-9																					8.59	765
60	1	31-5	1	32-2	1	32-10	1	33-7	1	34-0																			10.34	917
66	1	33-9	1	34-6	1	35-2	1	35-11	1	36-7	1	37-4																	13.81	1124
72	1	36-0	1	36-9	1	37-6	1	38-3	1	38-11	1	39-8	1	40-5															17.27	1313
84	1	40-7	1	41-3	1	42-0	1	42-9	1	43-6	1	44-3	1	45-0	1	45-8	1	46-5											23.32	1716
96	1	45-5	1	46-2	1	46-10	1	47-7	1	48-4	1	49-0	1	49-9	1	50-6	1	51-3	1	51-11	1	52-8	1	53-1					31.39	2290
108	1	50-1	1	50-10	1	51-6	1	52-3	1	53-0	1	53-9	1	54-5	1	55-2	1	55-10	1	56-7	1	57-4	1	58-1	1	58-10	1	59-4	42.21	3043

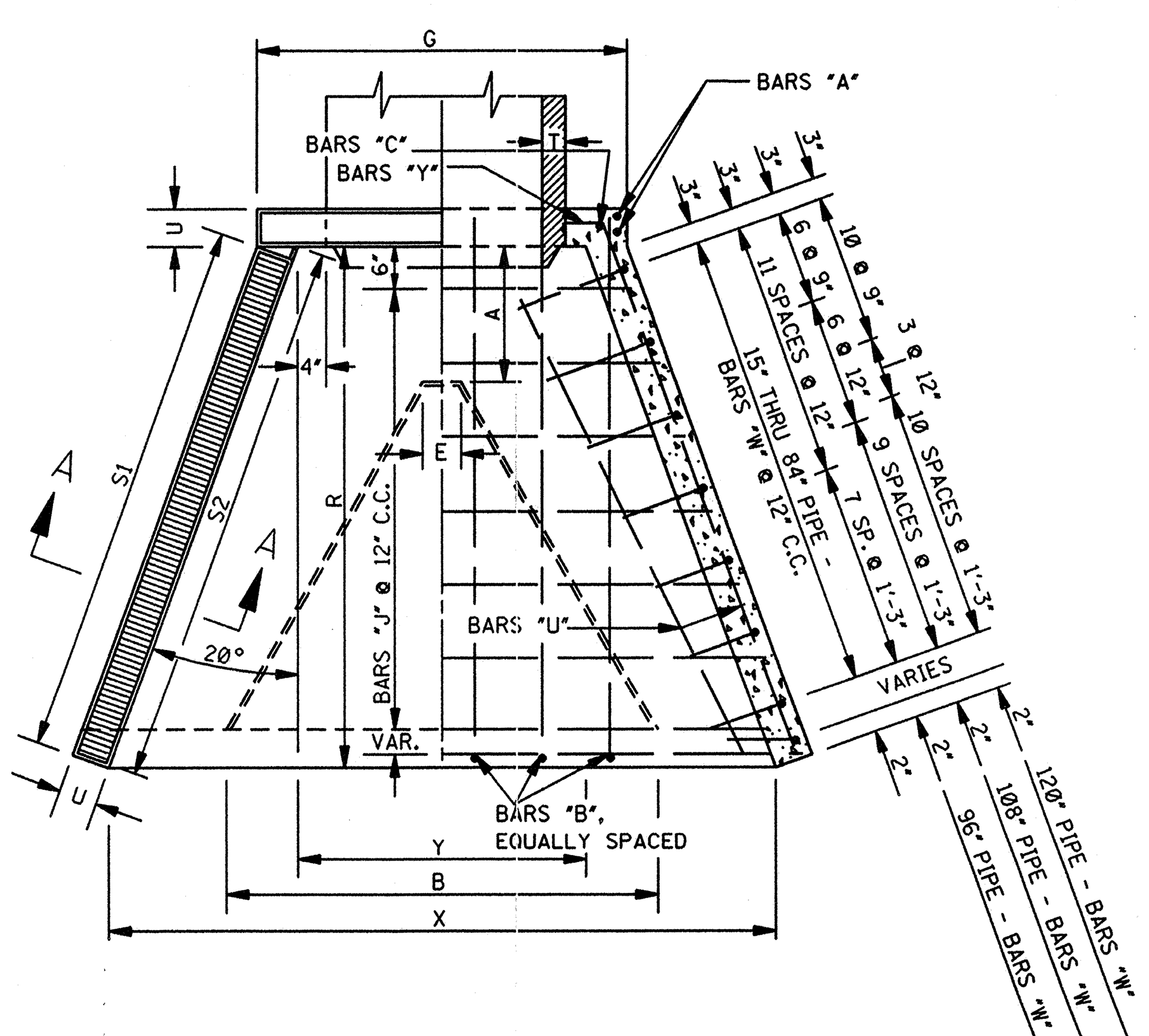

PLAN

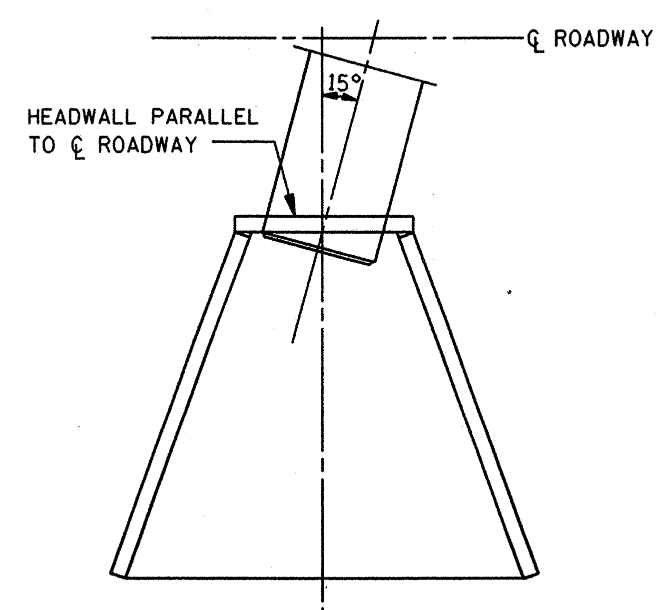

15° SKEW INSTALLATION PLAN

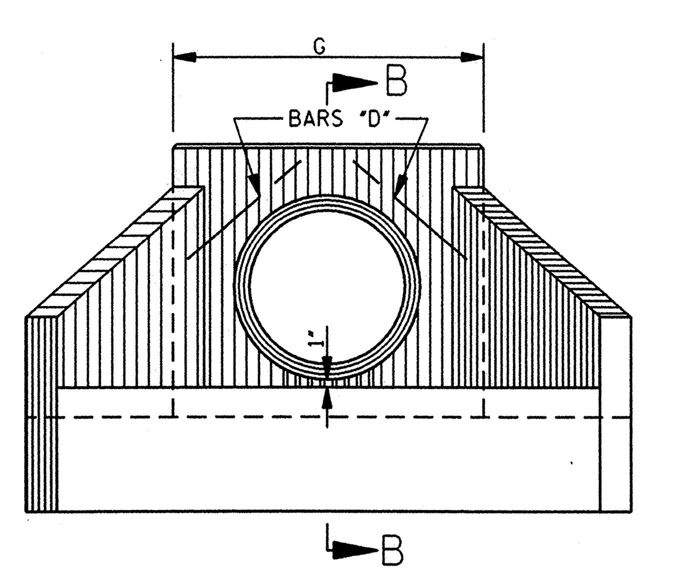

FRONT ELEVATION

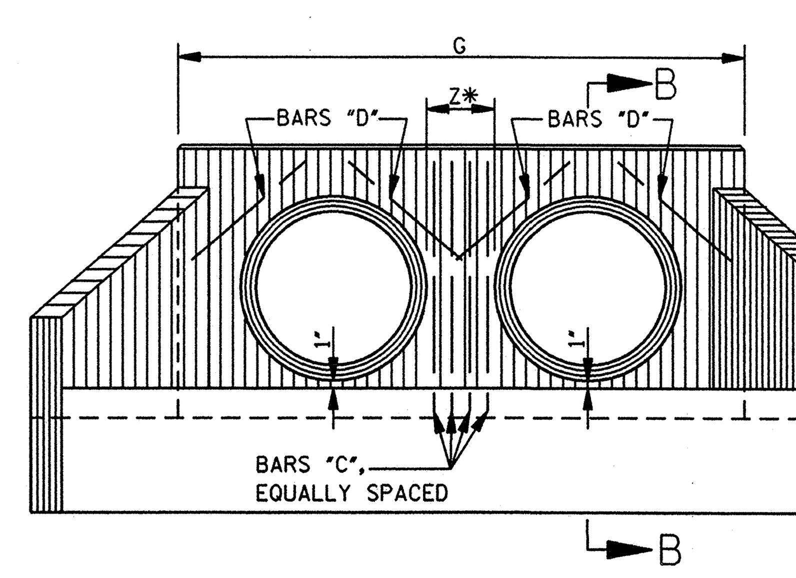

FRONT ELEVATION

*NOTE: MEASURE NORMAL (PERPENDICULAR) TO PIPE.

BY	
REVISION	
DATE	

MISSISSIPPI DEPARTMENT OF TRANSPORTATION
ROADWAY DESIGN DIVISION
STANDARD PLAN

HEADWALLS FOR CONCRETE PIPE 3:1 SLOPE – 0°– 15° SKEW

ENGLISH

WORKING NUMBER HW-3100

ISSUE DATE: OCTOBER 1, 1998

SHEET NUMBER 343

STATE	PROJECT NO.
MISS.	

DIMENSIONS AND REINFORCING COMMON TO FLARED HEADWALLS FOR SINGLE, DOUBLE AND TRIPLE LINE PIPE CULVERTS

PIPE DIA	MIN THK "T"	DIMENSIONS C	H	R	S1	S2	U	W
15	2¼	7	2-5	3-10½	4-11¾	5-5¾	6	0-8
18	2½	7	2-9½	4-6	5-10⅝	6-4⅜	6	0-10
24	3	7	3-4½	5-9	7-7⅝	8-1⅝	6	1-0
30	3½	7	3-11½	6-9	9-0½	9-6½	6	1-3
36	4	7½	4-6½	7-10½	10-7⅝	11-1⅝	6	1-5
42	4½	7½	5-1½	8-10½	12-0⅝	12-6⅝	6	1-8
48	5	7½	5-8½	10-0	13-7¾	14-1⅜	6	1-10½
54	5½	8	6-3½	11-0	15-0⅝	15-6⅝	6	2-1
60	6	8	6-10½	12-3	16-9⅞	17-3⅞	6	2-3
66	6½	8	7-7	13-9	18-10⅛	19-5⅞	6½	2-6½
72	7	8	8-2	14-9	20-3⅞	20-10⅞	7	2-9
84	8	8	9-4	16-9	23-0¼	23-8¼	8	3-2
96	9	8	10-5	19-3	26-6⅝	27-2⅝	8	3-6
108	10	8	11-7	21-4	29-5	30-2	9	4-0

PIPE DIA	REINFORCING STEEL US NO	US LGTH	UL NO	UL LGTH	W1 S NO	W1 L NO	W1 SIZE	W1 X	W1 X1	W1 LGTH	W2 S NO	W2 L NO	W2 SIZE	W2 X	W2 X1	W2 LGTH	W3 S NO	W3 L NO	W3 SIZE	W3 X	W3 X1	W3 LGTH
15	2	3-11	2	4-10	2	3	#4	1-1	1-8	2-9	3	3	#4	1-0	1-0	2-0						
18	2	4-6	2	5-8	2	3	#4	1-3	2-0	3-3	3	4	#4	1-0	1-0	2-0						
24	2	5-9	2	7-6	2	3	#4	1-8	2-7	4-3	3	4	#4	1-4	1-7	2-11	2	1	#4	1-0	1-2	2-2
30	2	6-9	2	8-11	2	3	#4	2-1	3-2	5-3	3	4	#4	1-7	2-2	3-9	3	3	#4	1-0	1-5	2-5
36	2	7-11	2	10-6	2	3	#5	2-5	3-9	6-2	3	4	#4	2-0	2-9	4-9	3	4	#4	1-2	1-9	2-11
42	2	8-11	2	11-11	2	3	#5	2-11	4-4	7-3	3	4	#4	2-3	3-4	5-7	3	5	#4	1-7	2-4	3-11
48	2	10-0	2	13-6	2	3	#5	3-1	4-10	7-11	3	4	#5	2-8	3-10	6-6	3	5	#4	1-10	2-10	4-8
54	2	11-0	2	14-11	2	3	#5	3-6	5-4	8-10	3	4	#5	3-0	4-4	7-4	3	5	#4	2-3	3-4	5-7
60	2	12-3	2	16-8	2	3	#5	3-10	5-11	9-9	3	4	#5	3-3	4-11	8-2	3	5	#5	2-6	3-11	6-5
66	2	13-9	2	18-9	2	3	#6	4-3	6-8	10-11	3	4	#5	3-8	5-8	9-4	3	5	#5	3-2	4-8	7-10
72	2	14-9	2	20-1	2	3	#6	4-9	7-5	12-2	3	4	#6	4-2	6-5	10-7	3	5	#5	3-6	5-5	8-11
84	2	16-9	2	22-10	2	3	#6	5-5	8-7	14-0	3	4	#6	5-2	7-7	12-9	3	5	#6	4-6	6-7	11-1
96	2	19-3	2	26-5	2	3	#7	5-7	9-6	15-1	3	4	#7	5-7	8-6	14-1	3	5	#6	5-0	7-6	12-6
108	2	21-4	2	29-3	3	4	#7	6-5	10-9	17-2	4	5	#7	6-5	9-9	16-2	3	5	#7	5-10	8-9	14-7

PIPE DIA	W4 S NO	W4 L NO	W4 SIZE	W4 X	W4 X1	W4 LGTH	W5 S NO	W5 L NO	W5 SIZE	W5 X	W5 X1	W5 LGTH	W6 S NO	W6 L NO	W6 SIZE	W6 X	W6 X1	W6 LGTH	W7 S NO	W7 L NO	W7 SIZE	W7 X	W7 X1	W7 LGTH
15																								
18																								
24																								
30																								
36																								
42																								
48																								
54																								
60	1	2	#4	1-8	2-5	4-1																		
66	1	2	#4	1-10	2-11	4-9	2	4	#4	2-0	3-5	5-5	1	1	#4	1-9	3-0	4-9						
72	2	4	#4	2-0	3-5	5-5	1	1	#4	1-9	3-0	4-9												
84	2	4	#5	3-2	4-7	7-9	2	4	#5	2-6	3-7	6-1												
96	2	4	#5	3-8	5-6	9-2	2	4	#5	3-0	4-6	7-6	3	2	#5	2-8	3-10	6-6						
108	3	4	#6	4-6	6-9	11-3	2	4	#5	3-10	5-9	9-7	3	3	#5	3-2	4-9	7-11	1	2	#5	2-10	4-5	7-3

PIPE DIA	W8 S NO	W8 L NO	W8 SIZE	W8 X	W8 X1	W8 LGTH	YS1 NO	YS1 LGTH	YS2 NO	YS2 LGTH	YS3 NO	YS3 LGTH	YS4 NO	YS4 LGTH	YS5 NO	YS5 LGTH	YS6 NO	YS6 LGTH	YS7 NO	YS7 LGTH	YS8 NO	YS8 LGTH	YL1 NO	YL1 LGTH	YL2 NO	YL2 LGTH	YL3 NO	YL3 LGTH	YL4 NO	YL4 LGTH	YL5 NO	YL5 LGTH	YL6 NO	YL6 LGTH	YL7 NO	YL7 LGTH	YL8 NO	YL8 LGTH
15							1	2-3	1	4-6													1	3-7	1	6-10												
18							1	2-3	1	5-2													1	3-7	1	6-10												
24							1	2-3	1	5-3	1	6-5											1	3-7	1	7-7	1	8-7										
30							1	2-3	1	5-3	1	7-5											1	3-7	1	7-7	1	10-0										
36							1	2-3	1	5-3	1	8-3	1	8-6									1	3-7	1	7-7	2	11-8										
42							1	2-3	1	5-3	1	8-3	1	9-6									1	3-7	1	7-7	1	12-7	1	13-1								
48							1	2-3	1	5-3	1	8-3	1	10-8									1	3-7	1	7-7	1	12-7	2	14-8								
54							1	2-3	1	5-3	1	8-3	2	11-8									1	3-7	1	7-7	1	12-7	2	16-1								
60							1	2-3	1	5-3	1	8-3	1	12-3	2	12-11							1	3-7	1	7-7	1	12-7	1	16-7	2	17-10						
66							1	2-3	1	5-3	1	8-3	1	12-3	3	14-5							1	3-7	1	7-7	1	12-7	1	16-7	3	19-11						
72							1	2-4	1	5-4	1	8-4	1	12-4	1	15-4	2	16-6					1	3-8	1	7-8	1	12-8	1	16-8	1	20-8	2	21-4					
84							1	2-5	1	5-5	1	8-5	1	12-5	1	15-5	1	17-11	2	18-6			1	3-9	1	7-9	1	12-9	1	16-9	1	20-9	3	24-2					
96							1	2-5	1	5-5	1	8-5	1	12-5	1	15-5	1	17-11	3	20-0			1	3-9	1	7-9	1	12-9	1	16-9	1	20-9	1	24-9	3	27-9		
108	1	2	#5	2-10	4-5	7-3	1	2-6	1	5-6	1	8-6	1	12-6	1	15-6	1	18-0	1	21-9	3	22-2	1	4-1	1	7-10	1	12-10	1	16-10	1	20-7	1	25-7	1	29-4	3	31-8

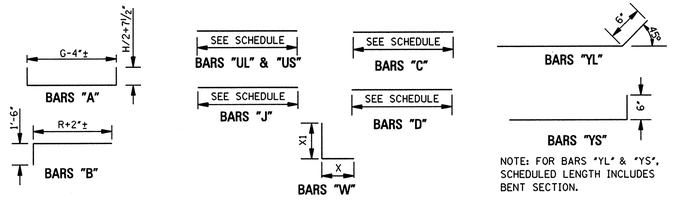

NOTE: FOR BARS "YL" & "YS", SCHEDULED LENGTH INCLUDES BENT SECTION.

BAR BENDING DETAILS

NOTE: WHENEVER THE COMPUTED LENGTH OF BAR EXCEEDS 30', THE SCHEDULED LENGTH INCLUDES A 12" LAP.
ALL BARS ARE #4 EXCEPT BARS "W". SEE SCHEDULE FOR SIZE OF BARS "W". IN BAR DESIGNATIONS (e.g. "YS" & "YL"), S DENOTES SHORT WING AND L DENOTES LONG WING.

GENERAL NOTES:

1. SPECIFICATIONS: MISSISSIPPI DEPARTMENT OF TRANSPORTATION, LATEST EDITION.
2. ALL CONCRETE SHALL BE CLASS "B".
3. ALL EXPOSED EDGES SHALL BE CHAMFERED ¾".
4. EXPOSED CONCRETE SURFACES SHALL BE FINISHED IN ACCORDANCE WITH THE APPLICABLE SECTION OF THE MDOT SPECIFICATIONS.
5. ALL LENGTHS AND QUANTITIES IN THE TABLES HEREON ARE BASED ON CONCRETE PIPE.
6. QUANTITIES SHOWN SHALL BE THE BASIS FOR FINAL PAYMENT UNLESS AUTHORIZED MODIFICATIONS ARE MADE.

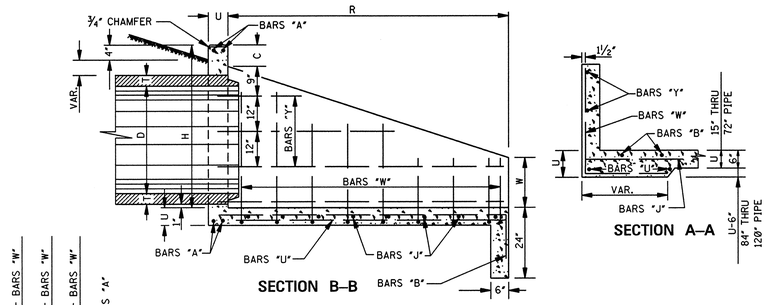

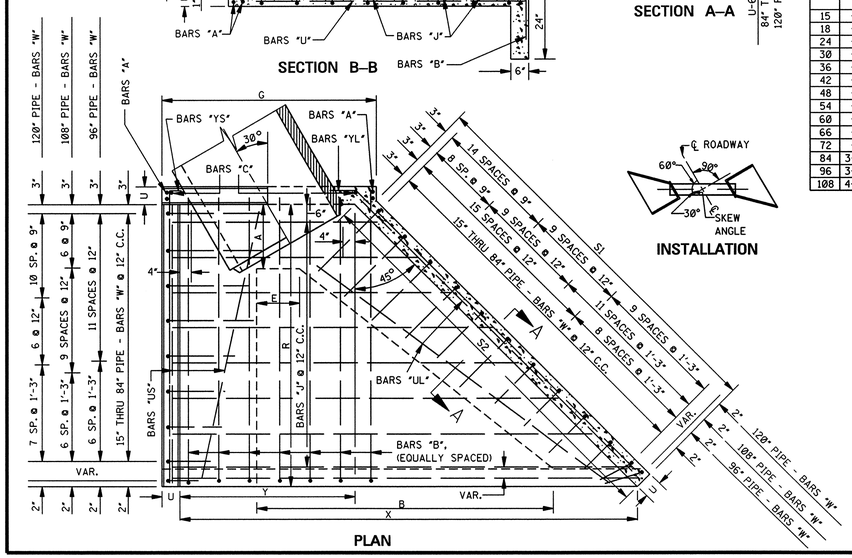

PLAN

INSTALLATION

DIMENSIONS AND REINFORCING FOR FLARED HEADWALL FOR SINGLE LINE PIPE CULVERT

PIPE DIA	DIMENSIONS A	B	E	G	X	Y	Z
15	-	-	-	3-8½	6-4½	2-6	-
18	-	-	-	4-0	7-3⅜	2-9⅜	-
24	-	-	-	4-8	9-2½	3-5½	-
30	-	-	-	5-4⅝	10-11⅛	4-2⅛	-
36	-	-	-	6-0⅛	12-8⅛	4-9⅝	-
42	-	-	-	6-8¼	14-4¼	5-5¾	-
48	-	-	-	7-4¼	16-1⅛	6-1⅞	-
54	-	-	-	8-1½	17-11	6-11	-
60	-	-	-	8-9⅝	19-10⅛	7-7⅛	-
66	-	-	-	9-7	22-0¼	8-3¼	-
72	-	-	-	10-4¼	23-8⅝	8-11⅞	-
84	3-2	16-9	2-0	11-10¾	27-0¼	10-3½	-
96	3-6	19-3	2-0	13-3	30-10⅞	11-7⅝	-
108	4-0	21-4	2-0	14-9½	34-3⅞	12-11⅞	-

PIPE DIA	REINFORCING STEEL A NO	A LGTH	B NO	B LGTH	C NO	C LGTH	D NO	D LGTH	J1 NO	J1 LGTH	J2 NO	J2 LGTH	J3 NO	J3 LGTH	J4 NO	J4 LGTH	J5 NO	J5 LGTH	J6 NO	J6 LGTH	J7 NO	J7 LGTH	J8 NO	J8 LGTH	J9 NO	J9 LGTH	J10 NO	J10 LGTH	J11 NO	J11 LGTH	J12 NO	J12 LGTH	J13 NO	J13 LGTH	J14 NO	J14 LGTH	J15 NO	J15 LGTH	J16 NO	J16 LGTH	J17 NO	J17 LGTH	J18 NO	J18 LGTH	J19 NO	J19 LGTH	J20 NO	J20 LGTH	J21 NO	J21 LGTH	J22 NO	J22 LGTH
15	4	7-0	5	5-6	2	2-8	2	1-10	1	3-10	1	4-10	1	5-10	1	6-10																																				
18	4	7-8	5	6-2	2	3-0	2	2-0	1	4-2	1	5-2	1	6-2	1	7-2	1	7-9																																		
24	4	8-11	6	7-5	2	3-7	2	2-3	1	4-10	1	5-10	1	6-10	1	7-10	1	8-10	1	9-9																																
30	4	10-3	7	8-5	2	4-2	2	2-6	1	5-7	1	6-7	1	7-7	1	8-7	1	9-7	1	10-7	1	11-5																														
36	4	11-5	7	9-6	2	4-9	2	2-9	1	6-2	1	7-2	1	8-2	1	9-2	1	10-2	1	11-2	1	12-2	1	13-2																												
42	4	12-8	8	10-6	2	5-4	2	3-0	1	6-10	1	7-10	1	8-10	1	9-10	1	10-10	1	11-10	1	12-10	1	13-10	1	14-10																										
48	4	13-11	9	11-8	2	5-11	2	3-3	1	7-6	1	8-6	1	9-6	1	10-6	1	11-6	1	12-6	1	13-6	1	14-6	1	15-6	1	16-6	1	16-8																						
54	4	15-4	9	12-8	2	6-6	2	3-6	1	8-3	1	9-3	1	10-3	1	11-3	1	12-3	1	13-3	1	14-3	1	15-3	1	16-3	1	17-3	1	18-3	1	18-5																				
60	4	16-7	10	13-11	2	7-1	2	3-9	1	9-0	1	10-0	1	11-0	1	12-0	1	13-0	1	14-0	1	15-0	1	16-0	1	17-0	1	18-0	1	19-0	1	20-0	1	20-4																		
66	4	18-1	11	15-5	2	7-10	2	4-3	1	9-9	1	10-9	1	11-9	1	12-9	1	13-9	1	14-9	1	15-9	1	16-9	1	17-9	1	18-9	1	19-9	1	20-9	1	21-9	1	22-7																
72	4	19-5	11	16-5	2	8-6	2	4-7	1	10-6	1	11-6	1	12-6	1	13-6	1	14-6	1	15-6	1	16-6	1	17-6	1	18-6	1	19-6	1	20-6	1	21-6	1	22-6	1	23-6	1	24-3														
84	4	22-12	13	18-5	2	9-8	2	5-3	1	12-0	1	13-0	1	14-0	1	15-0	1	16-0	1	17-0	1	18-0	1	19-0	1	20-0	1	21-0	1	22-0	1	23-0	1	24-0	1	25-0	1	26-0	1	27-0	1	27-9										
96	4	24-7	15	20-11	2	10-9	2	5-9	1	13-5	1	14-5	1	15-5	1	16-5	1	17-5	1	18-5	1	19-5	1	20-5	1	21-5	1	22-5	1	23-5	1	24-5	1	25-6	1	26-5	1	27-5	1	28-5	1	29-5	1	31-5	1	32-5	1	32-7				
108	4	27-4	16	23-0	2	12-0	2	6-4	1	15-0	1	16-0	1	17-0	1	18-0	1	19-0	1	20-0	1	21-0	1	22-0	1	23-0	1	24-0	1	25-0	1	26-0	1	27-0	1	28-0	1	29-0	1	30-0	1	32-0	1	33-0	1	34-0	1	35-0	1	36-0	1	36-1

PIPE DIA	PAY QTY 1-HEADWALL CONC CU YDS	STEEL LBS
15	0.97	97
18	1.23	114
24	1.80	163
30	2.40	205
36	3.10	253
42	3.86	326
48	4.77	420
54	5.71	489
60	6.86	605
66	9.06	771
72	11.17	898
84	15.59	1212
96	19.85	1586
108	26.96	2151

DIMENSIONS AND REINFORCING FOR FLARED HEADWALL FOR DOUBLE LINE PIPE CULVERT

PIPE DIA	DIMENSIONS A	B	E	G	X	Y	Z
15	-	-	-	6-8¼	9-4¼	5-5¾	1-0
18	-	-	-	7-3¼	10-6⅞	6-0⅞	1-0
24	-	-	-	8-7⅞	13-1⅞	7-4⅞	1-0
30	-	-	-	10-4⅞	15-10⅞	9-1⅞	1-3
36	-	-	-	11-10½	18-6½	10-8	1-6
42	-	-	-	13-6¼	21-2¼	12-3¾	1-9
48	-	-	-	15-1¾	23-11⅞	13-11⅞	2-0
54	-	-	-	16-11¾	26-9¼	15-9¼	2-3
60	-	-	-	18-7⅞	29-7⅛	17-4⅛	2-6
66	-	-	-	20-4¼	32-9⅝	19-0⅝	2-9
72	-	-	-	22-1⅛	35-5¼	20-8¼	3-0
84	3-2	30-5	15-8	25-6¾	40-8½	23-11½	3-6
96	3-6	34-10	17-7	28-10	46-5⅞	27-2⅞	4-0
108	4-0	38-10	19-6	32-3⅞	51-10	30-6	4-6

PIPE DIA	REINFORCING STEEL A NO	A LGTH	B NO	B LGTH	C NO	C LGTH	D NO	D LGTH	J1 NO	J1 LGTH	J2 NO	J2 LGTH	J3 NO	J3 LGTH	J4 NO	J4 LGTH	J5 NO	J5 LGTH	J6 NO	J6 LGTH	J7 NO	J7 LGTH	J8 NO	J8 LGTH	J9 NO	J9 LGTH	J10 NO	J10 LGTH	J11 NO	J11 LGTH	J12 NO	J12 LGTH	J13 NO	J13 LGTH	J14 NO	J14 LGTH	J15 NO	J15 LGTH	J16 NO	J16 LGTH	J17 NO	J17 LGTH	J18 NO	J18 LGTH	J19 NO	J19 LGTH	J20 NO	J20 LGTH	J21 NO	J21 LGTH	J22 NO	J22 LGTH
15	4	10-0	8	5-6	3	2-8	4	1-10	1	6-10	1	7-10	1	8-10	1	9-10																																				
18	4	11-0	8	6-2	3	3-0	4	2-0	1	7-5	1	8-5	1	9-5	1	10-5	1	11-1																																		
24	4	12-11	10	7-5	3	3-7	4	2-3	1	8-9	1	9-9	1	10-9	1	11-9	1	12-9	1	13-8																																
30	4	15-3	11	8-5	4	4-2	4	2-6	1	10-6	1	11-6	1	12-6	1	13-6	1	14-6	1	15-6	1	16-5																														
36	4	17-4	13	9-6	4	4-9	4	2-9	1	12-0	1	13-0	1	14-0	1	15-0	1	16-0	1	17-0	1	18-0	1	19-0																												
42	4	19-6	15	10-6	4	5-4	4	3-0	1	13-8	1	14-8	1	15-8	1	16-8	1	17-8	1	18-8	1	19-8	1	20-8	1	21-8																										
48	4	21-9	16	11-8	4	5-11	4	3-3	1	15-4	1	16-4	1	17-4	1	18-4	1	19-4	1	20-4	1	21-4	1	22-4	1	23-4	1	24-4	1	24-6																						
54	4	24-2	18	12-8	5	6-6	4	3-6	1	17-2	1	18-2	1	19-2	1	20-2	1	21-2	1	22-2	1	23-2	1	24-2	1	25-2	1	26-2	1	27-2	1	27-3																				
60	4	26-5	20	13-11	5	7-1	4	3-9	1	18-9	1	19-9	1	20-9	1	21-9	1	22-9	1	23-9	1	24-9	1	25-9	1	26-9	1	27-9	1	28-9	1	29-9	1	31-2																		
66	4	28-10	21	15-5	5	7-10	4	4-3	1	20-6	1	21-6	1	22-6	1	23-6	1	24-6	1	25-6	1	26-6	1	27-6	1	28-6	1	29-6	1	31-6	1	32-6	1	33-6	1	34-4																
72	4	32-2	23	16-5	6	8-6	4	4-7	1	22-3	1	23-3	1	24-3	1	25-3	1	26-3	1	27-3	1	28-3	1	29-3	1	31-3	1	32-3	1	33-3	1	34-3	1	35-3	1	36-3	1	36-11														
84	4	36-10	27	18-5	6	9-8	4	5-3	1	25-9	1	26-9	1	27-9	1	28-9	1	29-9	1	31-9	1	32-9	1	33-9	1	34-9	1	35-9	1	36-9	1	37-9	1	38-9	1	39-9	1	40-9	1	41-9	1	42-4										
96	4	41-2	30	20-11	7	10-9	4	5-9	1	29-0	1	30-0	1	32-0	1	33-0	1	34-0	1	35-0	1	36-0	1	37-0	1	38-0	1	39-0	1	40-0	1	41-0	1	42-0	1	43-0	1	44-0	1	45-0	1	46-0	1	47-0	1	48-0	1	48-2				
108	4	45-10	34	23-0	7	12-0	4	6-4	1	33-6	1	34-6	1	35-6	1	36-6	1	37-6	1	38-6	1	39-6	1	40-6	1	41-6	1	42-6	1	43-6	1	44-6	1	45-6	1	46-6	1	47-6	1	48-6	1	49-6	1	50-6	1	51-6	1	52-6	1	53-6	1	53-7

PIPE DIA	PAY QTY 1-HEADWALL CONC CU YDS	STEEL LBS
15	1.39	128
18	1.74	151
24	2.51	215
30	3.41	273
36	4.45	348
42	5.60	446
48	6.95	565
54	8.38	677
60	10.09	828
66	13.29	1017
72	16.43	1215
84	22.31	1620
96	28.43	2101
108	38.17	2794

DIMENSIONS AND REINFORCING FOR FLARED HEADWALL FOR TRIPLE LINE PIPE CULVERT

PIPE DIA	DIMENSIONS A	B	E	G	X	Y	Z
15	-	-	-	9-8	12-4	8-5½	1-0
18	-	-	-	10-6⅞	13-10	9-4	1-0
24	-	-	-	12-6⅞	17-1¼	11-4¼	1-0
30	-	-	-	15-3½	20-10	14-1	1-3
36	-	-	-	17-9	24-5	16-6½	1-6
42	-	-	-	20-4¼	28-0¼	19-1¾	1-9
48	-	-	-	22-11⅞	31-8⅛	21-8⅛	2-0
54	-	-	-	25-10	35-7½	24-7½	2-

STATE	PROJECT NO.
MISS.	

DIMENSIONS AND REINFORCING COMMON TO FLARED HEADWALLS FOR SINGLE, DOUBLE AND TRIPLE LINE PIPE CULVERTS

DIMENSIONS

PIPE DIA	MIN THK "T"	C	H	R	S1	S2	U	W
15	2 1/4	7	2-5	3-10 1/2	6-10 5/8	7-9	6	0-8
18	2 1/2	7	2-9 1/2	4-6	8-1 5/8	9-0	6	0-10
24	3	7	3-4 1/2	5-9	10-7 5/8	11-6	6	1-0
30	3 1/2	7	3-11 1/2	6-9	12-7 5/8	13-6	6	1-3
36	4	7 1/2	4-6 1/2	7-10 1/2	14-10 5/8	15-9	6	1-5
42	4 1/2	7 1/2	5-1 1/2	8-10 1/2	16-10 5/8	17-9	6	1-8
48	5	7 1/2	5-8 1/2	10-0	19-1 5/8	20-0	6	1-10 1/2
54	5 1/2	8	6-3 1/2	11-0	21-1 5/8	22-0	6	2-1
60	6	8	6-10 1/2	12-3	23-7 5/8	24-6	6	2-3
66	6 1/2	8	7-7	13-9	26-6 3/4	27-6	6 1/2	2-6 1/2
72	7	8	8-2	14-9	28-6	29-6	7	2-9
84	8	8	9-4	16-9	32-4 1/8	33-6	8	3-2
96	9	8	10-5	19-3	37-4 1/8	38-6	8	3-6
108	10	8	11-7	21-4	41-4 3/8	42-8	9	4-0

REINFORCING STEEL

PIPE DIA	US NO	US LGTH	UL NO	UL LGTH	W1 S NO	W1 L NO	W1 SIZE	W1 X	W1 X1	W1 LGTH	W2 S NO	W2 L NO	W2 SIZE	W2 X	W2 X1	W2 LGTH
15	2	3-11	2	6-9	2	4	#4	1-1	1-8	2-9	3	4	#4	1-0	1-0	2-0
18	2	4-6	2	8-0	2	4	#4	1-3	2-0	3-3	3	5	#4	1-0	1-0	2-0
24	2	5-9	2	10-6	2	4	#4	1-8	2-7	4-3	3	6	#4	1-4	1-7	2-11
30	2	6-9	2	12-6	2	4	#4	2-1	3-2	5-3	3	6	#4	1-7	2-2	3-9
36	2	7-11	2	14-9	2	4	#5	2-5	3-9	6-2	3	6	#4	2-0	2-9	4-9
42	2	8-11	2	16-9	2	4	#5	2-11	4-4	7-3	3	6	#4	2-3	3-4	5-7
48	2	10-0	2	19-0	2	4	#5	3-1	4-10	7-11	3	6	#5	2-8	3-10	6-6
54	2	11-0	2	21-0	2	4	#5	3-6	5-4	8-10	3	6	#5	3-0	4-4	7-4
60	2	12-3	2	23-6	2	4	#5	3-10	5-11	9-9	3	6	#5	3-3	4-11	8-2
66	2	13-9	2	26-5	2	4	#6	4-3	6-8	10-11	3	6	#5	3-8	5-8	9-4
72	2	14-9	2	28-4	2	4	#6	4-9	7-5	12-2	3	6	#6	4-2	6-5	10-7
84	2	16-9	2	33-2	2	4	#6	5-5	8-7	14-0	3	6	#6	5-2	7-7	12-9
96	2	19-3	2	38-2	2	4	#7	5-7	9-6	15-1	3	6	#7	5-7	8-6	14-1
108	2	21-4	2	42-2	3	5	#7	6-5	10-9	17-2	4	8	#7	6-5	9-9	16-2

PIPE DIA	W3 S NO	W3 L NO	W3 SIZE	W3 X	W3 X1	W3 LGTH	W4 S NO	W4 L NO	W4 SIZE	W4 X	W4 X1	W4 LGTH
15												
18												
24	2	1	#4	1-0	1-2	2-2						
30	3	3	#4	1-1	1-3	2-4						
36	3	5	#4	1-2	1-9	2-11	1	1	#4	1-1	1-7	2-8
42	3	5	#4	1-7	2-4	3-11	2	3	#4	1-2	1-10	3-0
48	3	5	#4	1-10	2-10	4-8	3	5	#4	1-3	2-0	3-3
54	3	5	#4	2-3	3-4	5-7	4	7	#4	1-7	2-4	3-11
60	3	5	#5	2-6	3-11	6-5	4	7	#4	1-10	2-11	4-9
66	3	5	#5	3-2	4-8	7-10	4	7	#5	2-7	3-8	6-3
72	3	5	#5	3-6	5-5	8-11	4	7	#5	2-10	4-5	7-3
84	3	5	#6	4-6	6-7	11-1	4	7	#5	3-9	5-7	9-4
96	3	5	#6	5-0	7-6	12-6	4	7	#5	4-4	6-6	10-10
108	3	5	#7	5-10	8-9	14-7	3	7	#6	5-2	7-9	12-11

PIPE DIA	W5 S NO	W5 L NO	W5 SIZE	W5 X	W5 X1	W5 LGTH	W6 S NO	W6 L NO	W6 SIZE	W6 X	W6 X1	W6 LGTH
15												
18												
24												
30												
36												
42												
48												
54												
60	1	2	#4	1-8	2-5	4-1						
66	2	5	#4	1-10	2-8	4-6						
72	2	5	#4	2-0	3-5	5-5	1	2	#4	1-9	3-0	4-9
84	2	5	#5	3-2	4-7	7-9	2	6	#5	2-6	3-7	6-1
96	2	4	#5	3-8	5-6	9-2	2	5	#5	3-0	4-6	7-6
108	3	5	#5	4-6	6-9	11-3	2	5	#5	3-10	5-9	9-7

PIPE DIA	W7 S NO	W7 L NO	W7 SIZE	W7 X	W7 X1	W7 LGTH	W8 S NO	W8 L NO	W8 SIZE	W8 X	W8 X1	W8 LGTH
15												
18												
24												
30												
36												
42												
48												
54												
60												
66												
72												
84												
96	3	4	#5	2-8	3-10	6-6						
108	3	5	#5	3-2	4-9	7-11	1	2	#5	2-10	4-5	7-3

PIPE DIA	YS1 NO	YS1 LGTH	YS2 NO	YS2 LGTH	YS3 NO	YS3 LGTH	YS4 NO	YS4 LGTH	YS5 NO	YS5 LGTH	YS6 NO	YS6 LGTH	YS7 NO	YS7 LGTH	YS8 NO	YS8 LGTH
15	1	2-3	1	4-6												
18	1	2-3	1	5-2												
24	1	2-3	1	5-3	1	6-5										
30	1	2-3	1	5-3	1	7-5										
36	1	2-3	1	5-3	1	8-3	1	8-6								
42	1	2-3	1	5-3	1	8-3	1	9-6								
48	1	2-3	1	5-3	1	8-3	1	10-8								
54	1	2-3	1	5-3	1	8-3	2	11-8								
60	1	2-3	1	5-3	1	8-3	1	12-3	2	12-11						
66	1	2-3	1	5-3	1	8-3	1	12-3	3	14-5						
72	1	2-4	1	5-4	1	8-4	1	12-4	1	15-4	2	16-6				
84	1	2-5	1	5-5	1	8-5	1	12-5	1	15-5	1	17-11	2	18-6		
96	1	2-5	1	5-5	1	8-5	1	12-5	1	15-5	1	17-11	3	20-0		
108	1	2-6	1	5-6	1	8-6	1	12-6	1	15-6	1	18-0	1	21-9	3	22-2

PIPE DIA	YL1 NO	YL1 LGTH	YL2 NO	YL2 LGTH	YL3 NO	YL3 LGTH	YL4 NO	YL4 LGTH	YL5 NO	YL5 LGTH	YL6 NO	YL6 LGTH	YL7 NO	YL7 LGTH	YL8 NO	YL8 LGTH
15	1	4-9	1	8-1												
18	1	4-9	1	9-4												
24	1	4-9	1	10-9	1	11-10										
30	1	4-9	1	10-9	1	13-2										
36	1	4-9	1	10-9	1	15-9	1	16-1								
42	1	4-9	1	10-9	1	15-9	1	18-1								
48	1	4-9	1	10-9	1	15-9	2	20-4								
54	1	4-9	1	10-9	1	15-9	2	22-4								
60	1	4-9	1	10-9	1	15-9	1	22-9	2	24-10						
66	1	4-11	1	10-11	1	15-11	1	22-11	3	27-11						
72	1	4-11	1	10-11	1	15-11	1	22-11	1	27-11	2	31-10				
84	1	5-1	1	11-1	1	16-1	1	23-1	1	28-1	3	34-10				
96	1	5-1	1	11-1	1	16-1	1	23-1	1	28-1	1	35-4	3	39-10		
108	1	5-3	1	11-3	1	16-3	1	22-3	1	27-3	1	34-6	1	40-9	4	44-0

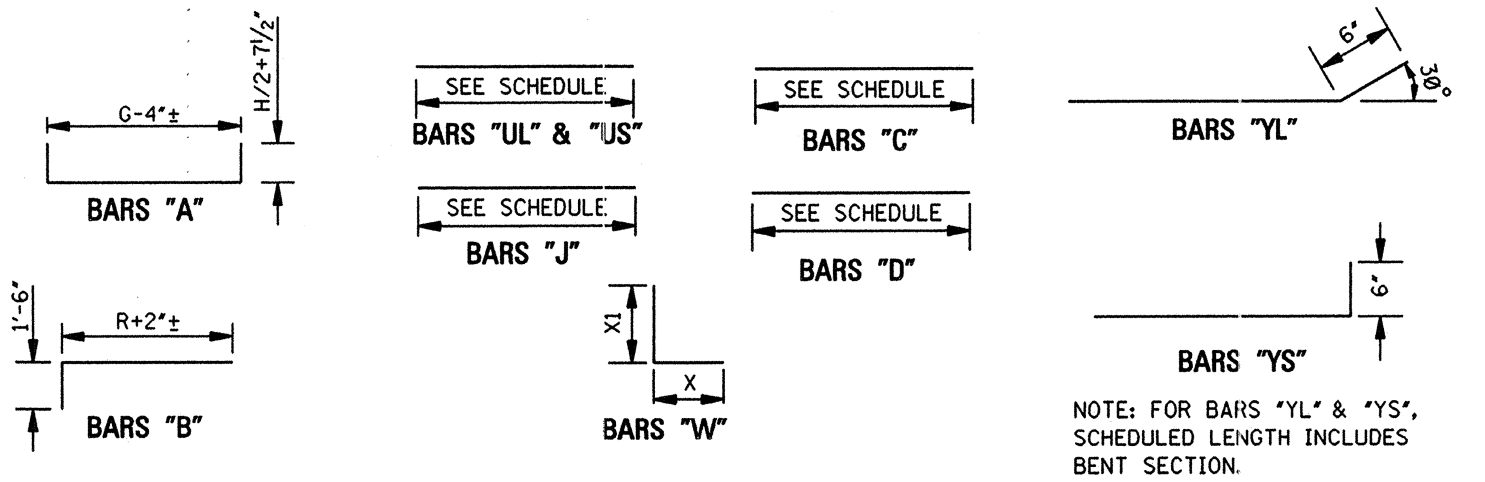

BAR BENDING DETAILS

NOTE: WHENEVER THE COMPUTED LENGTH OF BAR EXCEEDS 30', THE SCHEDULED LENGTH INCLUDES A 12" LAP. ALL BARS ARE #4 EXCEPT BARS "W". SEE SCHEDULE FOR SIZE OF BARS "W". IN BAR DESIGNATIONS (e.g. "YS" & "YL"), S DENOTES SHORT WING AND L DENOTES LONG WING.

GENERAL NOTES:

1. SPECIFICATIONS: MISSISSIPPI DEPARTMENT OF TRANSPORTATION, LATEST EDITION.
2. ALL CONCRETE SHALL BE CLASS "B".
3. ALL EXPOSED EDGES SHALL BE CHAMFERED 3/4".
4. EXPOSED CONCRETE SURFACES SHALL BE FINISHED IN ACCORDANCE WITH THE APPLICABLE SECTION OF THE MDOT SPECIFICATIONS.
5. ALL LENGTHS AND QUANTITIES IN THE TABLES HEREON ARE BASED ON CONCRETE PIPE.
6. QUANTITIES SHOWN SHALL BE THE BASIS FOR FINAL PAYMENT UNLESS AUTHORIZED MODIFICATIONS ARE MADE.

DIMENSIONS AND REINFORCING FOR FLARED HEADWALL FOR SINGLE LINE PIPE CULVERT

PIPE DIA	A	B	E	G	X	Y	Z	A NO	A LGTH	B NO	B LGTH	C NO	C LGTH	D NO	D LGTH
15	-	-	-	4-4 7/8	9-7 3/8	2-10 7/8	-	4	7-9	5	5-6	2	2-8	2	1-10
18	-	-	-	4-9 1/8	11-0 5/8	3-3 1/8	-	4	8-6	5	6-2	2	3-0	2	2-0
24	-	-	-	5-7	14-0 1/2	4-1	-	4	9-10	6	7-5	2	3-7	2	2-3
30	-	-	-	6-5 5/8	16-8	4-11 1/2	-	4	11-4	7	8-5	2	4-2	2	2-6
36	-	-	-	7-2 3/4	19-4 1/2	5-8 7/8	-	4	12-8	8	9-6	2	4-9	2	2-9
42	-	-	-	8-0 3/4	21-11 1/4	6-6 3/4	-	4	14-2	8	10-6	2	5-4	2	3-0
48	-	-	-	8-10 5/8	24-8 1/2	7-4 5/8	-	4	15-6	9	11-8	2	5-11	2	3-3
54	-	-	-	9-9 7/8	27-4 1/2	8-3 7/8	-	4	17-0	10	12-8	2	6-6	2	3-6
60	-	-	-	10-7 3/4	30-4 3/8	9-1 7/8	-	4	18-6	11	13-11	2	7-1	2	3-9
66	-	-	-	11-7 1/4	33-9 1/2	9-11 5/8	-	4	20-1	12	15-5	2	7-10	2	4-3
72	-	-	-	12-6 5/8	36-4 1/8	10-9 5/8	-	4	21-8	13	16-5	2	8-6	2	4-7
84	3-2	29-0	3-0	14-5 1/2	41-5 5/8	12-5 1/2	-	4	24-9	15	18-5	2	9-8	2	5-3
96	3-6	33-4	3-0	16-1 1/8	47-5 3/8	14-1 1/4	-	4	27-5	17	20-11	2	10-9	2	5-9
108	4-0	37-0	3-0	18-0	52-8 1/2	15-9	-	4	31-6	19	23-0	2	12-0	2	6-4

PIPE DIA	J1 NO	J1 LGTH	J2 NO	J2 LGTH	J3 NO	J3 LGTH	J4 NO	J4 LGTH	J5 NO	J5 LGTH	J6 NO	J6 LGTH	J7 NO	J7 LGTH	J8 NO	J8 LGTH	J9 NO	J9 LGTH	J10 NO	J10 LGTH	J11 NO	J11 LGTH
15	1	4-11	1	6-8	1	8-5	1	10-1	1	10-4												
18	1	5-3	1	7-0	1	8-9	1	10-5	1	11-7												
24	1	6-1	1	7-10	1	9-6	1	11-3	1	13-0	1	14-8										
30	1	7-0	1	8-9	1	10-5	1	12-2	1	13-11	1	15-8	1	17-3								
36	1	7-9	1	9-6	1	11-2	1	12-11	1	14-8	1	16-5	1	18-2	1	19-10	1	20-0				
42	1	8-7	1	10-4	1	12-0	1	13-9	1	15-6	1	17-3	1	19-0	1	20-8	1	22-5	1	22-6		
48	1	9-5	1	11-2	1	12-10	1	14-8	1	16-4	1	18-1	1	19-10	1	21-6	1	23-3	1	25-0	1	25-3
54	1	10-4	1	12-1	1	13-9	1	15-6	1	17-3	1	19-0	1	20-9	1	22-5	1	24-2	1	25-11	1	27-8
60	1	11-2	1	12-10	1	14-8	1	16-4	1	18-1	1	19-10	1	21-7	1	23-3	1	25-0	1	26-9	1	28-6
66	1	12-1	1	13-10	1	15-6	1	17-3	1	19-0	1	20-9	1	22-6	1	24-3	1	25-11	1	27-8	1	29-5
72	1	13-1	1	14-10	1	16-6	1	18-3	1	20-0	1	21-9	1	23-6	1	25-3	1	26-11	1	28-8	1	31-5
84	1	15-0	1	16-9	1	18-5	1	20-2	1	21-11	1	23-8	1	25-5	1	27-1	1	28-10	1	31-7	1	33-4
96	1	16-7	1	18-4	1	20-0	1	21-9	1	23-6	1	25-3	1	27-0	1	28-8	1	31-5	1	33-2	1	34-11
108	1	18-6	1	20-3	1	22-0	1	23-8	1	25-5	1	27-2	1	28-10	1	31-8	1	33-4	1	35-1	1	36-10

PIPE DIA	J12 NO	J12 LGTH	J13 NO	J13 LGTH	J14 NO	J14 LGTH	J15 NO	J15 LGTH	J16 NO	J16 LGTH	J17 NO	J17 LGTH	J18 NO	J18 LGTH	J19 NO	J19 LGTH	J20 NO	J20 LGTH	J21 NO	J21 LGTH	J22 NO	J22 LGTH	PAY QTY 1-HEADWALL CONC CU YDS	STEEL LBS
15																							1.30	120
18																							1.65	133
24																							2.42	194
30																							3.23	243
36																							4.18	346
42																							5.21	407
48																							6.44	513
54	1	28-0																					7.70	604
60	1	31-3	1	32-0																			9.26	741
66	1	32-2	1	33-10	1	35-7																	12.23	952
72	1	33-2	1	34-10	1	36-7	1	38-0															15.06	1125
84	1	35-1	1	36-9	1	38-6	1	40-3	1	42-0	1	43-3											20.69	1508
96	1	36-8	1	38-4	1	40-1	1	41-10	1	43-7	1	45-3	1	47-0	1	48-9	1	49-2					26.38	1977
108	1	38-7	1	40-3	1	42-0	1	43-9	1	45-6	1	47-3	1	48-11	1	50-8	1	52-5	1	54-2	1	54-6	36.67	2719

DIMENSIONS AND REINFORCING FOR FLARED HEADWALL FOR DOUBLE LINE PIPE CULVERT

PIPE DIA	A	B	E	G	X	Y	Z	A NO	A LGTH	B NO	B LGTH	C NO	C LGTH	D NO	D LGTH
15	-	-	-	8-0 3/4	13-3 1/4	6-6 3/4	1-0	4	11-5	8	5-6	4	2-8	4	1-10
18	-	-	-	8-9 1/4	15-0 3/4	7-3 1/4	1-0	4	12-6	9	6-2	4	3-0	4	2-0
24	-	-	-	10-5	18-10 1/2	8-11	1-0	4	14-9	11	7-5	4	3-7	4	2-3
30	-	-	-	12-6 3/8	22-8 3/4	11-0 1/4	1-3	4	17-5	13	8-5	5	4-2	4	2-6
36	-	-	-	14-5	26-6 3/4	12-11 1/8	1-6	4	19-11	15	9-6	5	4-9	4	2-9
42	-	-	-	16-5 1/4	30-3 3/4	14-11 1/4	1-9	4	22-5	17	10-6	5	5-4	4	3-0
48	-	-	-	18-5 1/8	34-3	16-11 1/8	2-0	4	25-1	19	11-8	6	5-11	4	3-3
54	-	-	-	20-8	38-2 5/8	19-2	2-3	4	27-11	21	12-8	6	6-6	4	3-6
60	-	-	-	22-8	42-4 5/8	21-2 1/8	2-6	4	31-6	23	13-11	7	7-1	4	3-9
66	-	-	-	24-9 5/8	46-11 7/8	23-2	2-9	4	34-3	25	15-5	8	7-10	4	4-3
72	-	-	-	26-11 1/8	50-8 5/8	25-2 1/8	3-0	4	37-0	28	16-5	8	8-6	4	4-7
84	3-2	45-9	19-9	31-2 1/4	58-2 3/8	29-2 1/4	3-6	4	42-5	32	18-5	9	9-8	4	5-3
96	3-6	52-5	22-1	35-2 1/4	66-6 1/2	33-2 3/8	4-0	4	47-6	36	20-11	10	10-9	4	5-9
108	4-0	58-5	24-5	39-5 3/8	74-1 7/8	37-2 3/8	4-6	4	52-11	40	23-0	11	12-0	4	6-4

PIPE DIA	J1 NO	J1 LGTH	J2 NO	J2 LGTH	J3 NO	J3 LGTH	J4 NO	J4 LGTH	J5 NO	J5 LGTH	J6 NO	J6 LGTH	J7 NO	J7 LGTH	J8 NO	J8 LGTH	J9 NO	J9 LGTH	J10 NO	J10 LGTH	J11 NO	J11 LGTH
15	1	8-7	1	10-4	1	12-0	1	13-9	1	13-10												
18	1	9-3	1	11-0	1	12-9	1	14-5	1	15-8												
24	1	10-11	1	12-8	1	14-5	1	16-1	1	17-10	1	19-6										
30	1	13-0	1	14-9	1	16-5	1	18-2	1	19-11	1	21-8	1	23-4								
36	1	14-11	1	16-8	1	18-4	1	20-1	1	21-10	1	23-7	1	25-4	1	27-0	1	27-2				
42	1	16-11	1	18-8	1	20-4	1	22-1	1	23-10	1	25-7	1	27-4	1	29-0	1	31-9	1	31-11		
48	1	18-11	1	20-8	1	22-4	1	24-1	1	25-10	1	27-7	1	29-4	1	32-0	1	33-9	1	35-6	1	35-10
54	1	21-2	1	22-11	1	24-8	1	26-4	1	28-1	1	29-10	1	32-7	1	34-4	1	36-0	1	37-9	1	39-5
60	1	23-2	1	24-11	1	26-8	1	28-4	1	31-1	1	32-10	1	34-7	1	36-4	1	38-0	1	39-9	1	41-6
66	1	25-3	1	27-0	1	28-9	1	31-5	1	33-2	1	34-11	1	36-8	1	38-5	1	40-1	1	41-10	1	43-7
72	1	27-5	1	29-2	1	31-11	1	33-7	1	35-4	1	37-1	1	38-10	1	40-6	1	42-3	1	44-0	1	45-9
84	1	32-8	1	34-5	1	36-2	1	37-10	1	39-7	1	41-4	1	43-1	1	44-9	1	46-6	1	48-3	1	50-0
96	1	36-8	1	38-5	1	40-2	1	41-10	1	43-7	1	45-4	1	47-1	1	48-9	1	50-6	1	52-3	1	54-0
108	1	40-11	1	42-8	1	44-5	1	46-1	1	47-10	1	49-7	1	51-4	1	53-0	1	54-9	1	56-6	1	58-3

PIPE DIA	J12 NO	J12 LGTH	J13 NO	J13 LGTH	J14 NO	J14 LGTH	J15 NO	J15 LGTH	J16 NO	J16 LGTH	J17 NO	J17 LGTH	J18 NO	J18 LGTH	J19 NO	J19 LGTH	J20 NO	J20 LGTH	J21 NO	J21 LGTH	J22 NO	J22 LGTH	PAY QTY 1-HEADWALL CONC CU YDS	STEEL LBS
15																							1.81	159
18																							2.27	181
24																							3.29	259
30																							4.47	333
36																							5.83	466
42																							7.33	564
48																							9.10	709
54	1	39-10																					10.97	839
60	1	43-3	1	44-0																			13.23	1025
66	1	45-4	1	47-0	1	48-8																	17.42	1289
72	1	47-6	1	49-2	1	50-11	1	52-4															21.50	1520
84	1	51-9	1	53-5	1	55-2	1	56-11	1	58-8	1	59-11											28.91	2012
96	1	55-9	1	57-5	1	59-2	1	61-11	1	63-8	1	65-5	1	67-1	1	68-10	1	69-3					36.89	2625
108	1	60-0	1	62-9	1	64-5	1	66-2	1	67-11	1	69-7	1	71-4	1	73-1	1	74-10	1	76-7	1	77-0	49.28	3506

DIMENSIONS AND REINFORCING FOR FLARED HEADWALL FOR TRIPLE LINE PIPE CULVERT

PIPE DIA	A	B	E	G	X	Y	Z	A NO	A LGTH	B NO	B LGTH	C NO	C LGTH	D NO	D LGTH
15	-	-	-	11-8 5/8	16-11 1/8	10-2 5/8	1-0	4	15-1	12	5-6	6	2-8	6	1-10
18	-	-	-	12-9 3/8	19-0 7/8	11-3 3/8	1-0	4	16-6	13	6-2	6	3-0	6	2-0
24	-	-	-	15-3	23-8 1/2	13-9	1-0	4	19-7	16	7-5	6	3-7	6	2-3
30	-	-	-	18-7 1/8	28-9 1/2	17-1	1-3	4	23-6	19	8-5	8	4-2	6	2-6
36	-	-	-	21-7 1/4	33-9	20-1 3/8	1-6	4	27-1	22	9-6	8	4-9	6	2-9
42	-	-	-	24-9 3/4	38-8 1/4	23-3 3/4	1-9	4	31-10	25	10-6	8	5-4	6	3-0
48	-	-	-	27-11 5/8	43-9 1/2	26-5 5/8	2-0	4	35-7	29	11-8	10	5-11	6	3-3
54	-	-	-	31-6 1/8	49-0 3/4	30-0 1/8	2-3	4	39-9	32	12-8	10	6-6	6	3-6
60	-	-	-	34-8 1/4	54-4 7/8	33-2 3/8	2-6	4	43-6	35	13-11	12	7-1	6	3-9
66	-	-	-	38-0	60-2 1/4	36-4 3/8	2-9	4	47-6	39	15-5	14	7-10	6	4-3
72	-	-	-	41-3 5/8	65-1 1/8	39-6 5/8	3-0	4	51-5	42	16-5	14	8-6	6	4-7
84	3-2	62-6	36-6	47-11	74-11 1/8	45-11	3-6	4	59-2	48	18-5	16	9-8	6	5-3
96	3-6	71-6	41-2	54-3 3/8	85-7 5/8	52-3 1/2	4-0	4	67-8	55	20-11	18	10-9	6	5-9
108	4-0	79-10	45-10	60-10 3/4	95-7 1/4	58-7 3/4	4-6	4	75-5	62	23-0	20	12-0	6	6-4

PIPE DIA	J1 NO	J1 LGTH	J2 NO	J2 LGTH	J3 NO	J3 LGTH	J4 NO	J4 LGTH	J5 NO	J5 LGTH	J6 NO	J6 LGTH	J7 NO	J7 LGTH	J8 NO	J8 LGTH	J9 NO	J9 LGTH	J10 NO	J10 LGTH	J11 NO	J11 LGTH
15	1	12-3	1	14-0	1	15-9	1	17-5	1	17-6												
18	1	13-3	1	15-0	1	16-9	1	18-5	1	19-8												
24	1	15-9	1	17-6	1	19-3	1	20-11	1	22-8	1	24-3										
30	1	19-1	1	20-10	1	22-6	1	24-3	1	26-0	1	27-9	1	29-4								
36	1	22-1	1	23-10	1	25-6	1	27-3	1	29-0	1	31-9	1	33-6	1	35-2	1	35-4				
42	1	25-4	1	27-1	1	28-9	1	31-6	1	33-3	1	35-0	1	36-9	1	38-5	1	40-2	1	40-4		
48	1	28-6	1	31-3	1	33-0	1	34-8	1	36-5	1	38-2	1	39-11	1	41-8	1	43-4	1	45-1	1	45-4
54	1	33-0	1	34-9	1	36-5	1	38-2	1	39-11	1	41-8	1	43-5	1	45-2	1	46-10	1	48-7	1	50-4
60	1	36-2	1	37-11	1	39-8	1	41-4	1	43-1	1	44-10	1	46-7	1	48-3	1	50-0	1	51-9	1	53-6
66	1	39-6	1	41-3	1	43-0	1	44-8	1	46-5	1	48-2	1	49-11	1	51-8	1	53-4	1	55-1	1	56-10
72	1	42-10	1	44-7	1	46-3	1	48-0	1	49-9	1	51-6	1	53-3	1	55-0	1	56-8	1	58-5	1	61-2
84	1	49-5	1	51-2	1	52-10	1	54-8	1	56-4	1	58-1	1	59-10	1	62-6	1	64-3	1	66-0	1	67-9
96	1	55-10	1	57-7	1	59-3	1	62-0	1	63-9	1	65-6	1	67-3	1	69-0	1	70-8	1	72-5	1	74-2
108	1	63-5	1	65-2	1	66-11	1	68-7	1	70-4	1	72-1	1	73-10	1	75-7	1	77-3	1	79-0	1	80-9

PIPE DIA	J12 NO	J12 LGTH	J13 NO	J13 LGTH	J14 NO	J14 LGTH	J15 NO	J15 LGTH	J16 NO	J16 LGTH	J17 NO	J17 LGTH	J18 NO	J18 LGTH	J19 NO	J19 LGTH	J20 NO	J20 LGTH	J21 NO	J21 LGTH	J22 NO	J22 LGTH	PAY QTY 1-HEADWALL CONC CU YDS	STEEL LBS
15																							2.32	201
18																							2.89	228
24																							4.17	324
30																							5.70	423
36																							7.49	589
42																							9.46	720
48																							11.77	910
54	1	50-9																					14.24	1077
60	1	55-3	1	56-0																			17.19	1304
66	1	58-7	1	61-3	1	62-9																	22.60	1633
72	1	62-10	1	64-7	1	66-4	1	67-9															27.95	1901
84	1	69-5	1	71-3	1	72-11	1	74-8	1	76-5	1	77-8											37.13	2502
96	1	75-10	1	77-7	1	79-4	1	81-1	1	82-10	1	84-7	1	86-3	1	88-0	1	88-5					47.40	3273
108	1	82-6	1	84-2	1	85-11	1	87-8	1	89-5	1	92-2	1	93-10	1	95-7	1	97-4	1	99-1	1	99-6	63.00	4313

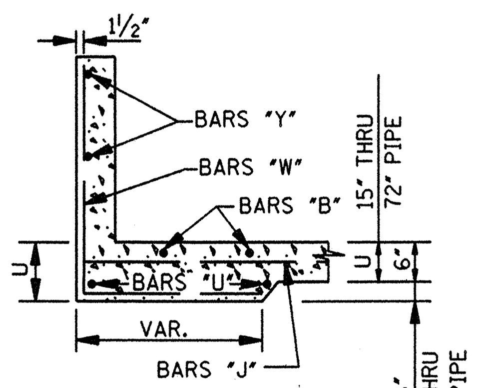

SECTION A–A

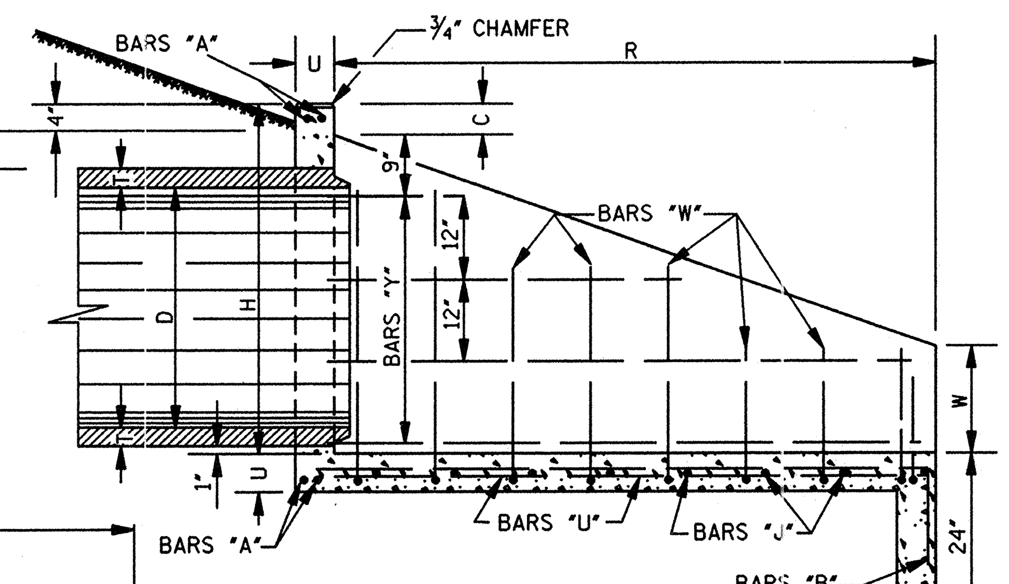

SECTION B–B

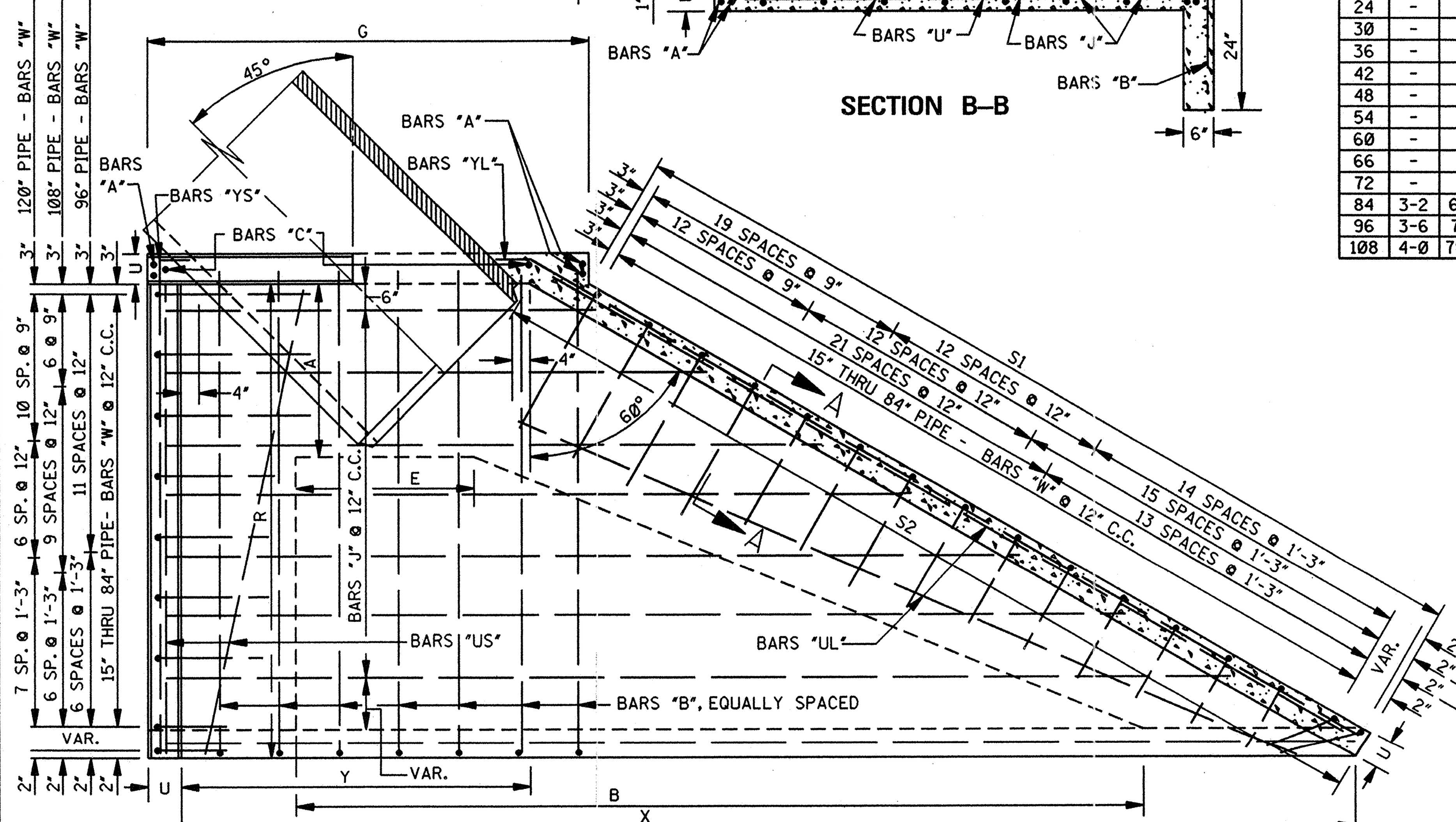

PLAN

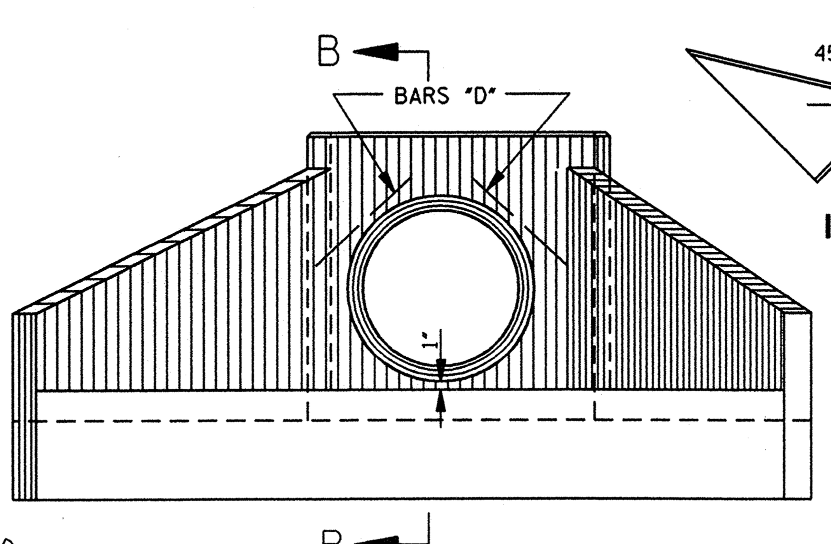

FRONT ELEVATION

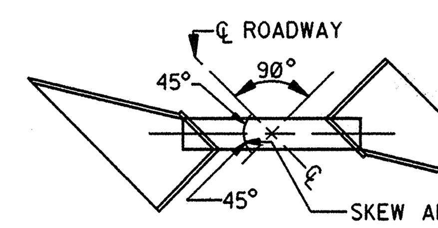

INSTALLATION

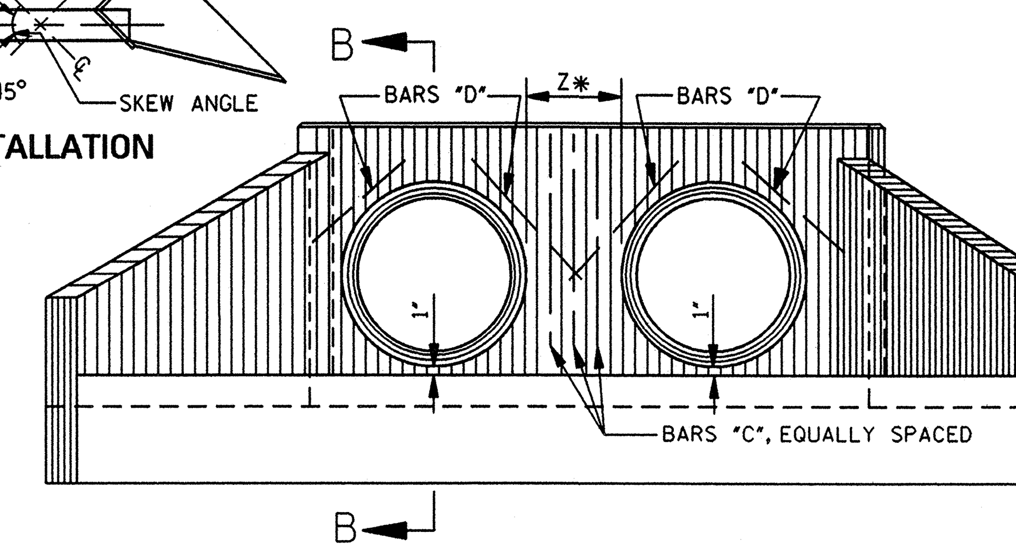

FRONT ELEVATION

*NOTE: MEASURE NORMAL (PERPENDICULAR) TO PIPE.

BY	
REVISION	
DATE	

MISSISSIPPI DEPARTMENT OF TRANSPORTATION
ROADWAY DESIGN DIVISION
STANDARD PLAN

HEADWALLS FOR CONCRETE PIPE 3:1 SLOPE – 45° SKEW

DEPARTMENT OF TRANSPORTATION ENGLISH MISSISSIPPI

WORKING NUMBER HW-3145

ISSUE DATE: OCTOBER 1, 1998

SHEET NUMBER 345

STATE	PROJECT NO.
MISS.	

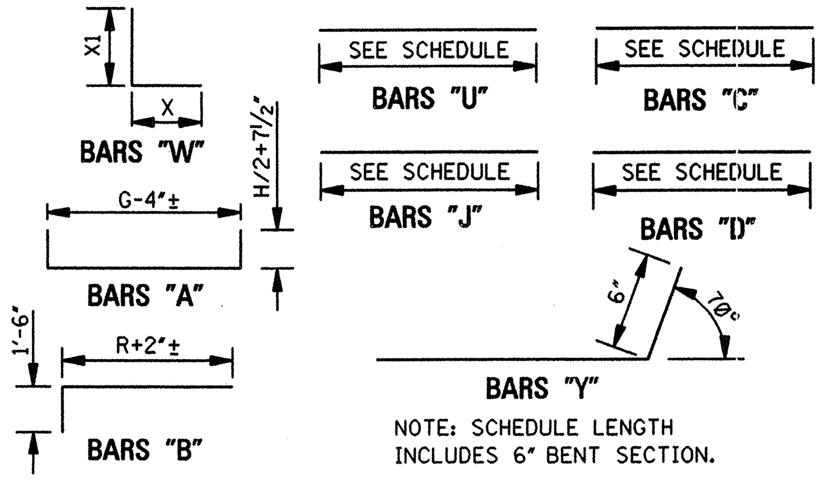

BAR BENDING DETAILS

NOTE: WHENEVER THE COMPUTED LENGTH OF BAR EXCEEDS 30', THE SCHEDULED LENGTH INCLUDES A 12" LAP. ALL BARS ARE #4 EXCEPT BARS "W". SEE SCHEDULE FOR SIZE OF BARS "W".

GENERAL NOTES:

1. SPECIFICATIONS: MISSISSIPPI DEPARTMENT OF TRANSPORTATION, LATEST EDITION.
2. ALL CONCRETE SHALL BE CLASS "B".
3. ALL EXPOSED EDGES SHALL BE CHAMFERED ¾".
4. EXPOSED CONCRETE SURFACES SHALL BE FINISHED IN ACCORDANCE WITH THE APPLICABLE SECTION OF THE MDOT SPECIFICATIONS.
5. ALL LENGTHS AND QUANTITIES IN THE TABLES HEREON ARE BASED ON CONCRETE PIPE.
6. QUANTITIES SHOWN SHALL BE THE BASIS FOR FINAL PAYMENT UNLESS AUTHORIZED MODIFICATIONS ARE MADE.

DIMENSIONS AND REINFORCING COMMON TO FLARED HEADWALLS FOR SINGLE, DOUBLE AND TRIPLE LINE PIPE CULVERTS

PIPE DIA	MIN THK "T"	DIMENSIONS C	H	R	S1	S2	U	W	REINFORCING STEEL U NO	U LGTH
15	2¼	7	2-5	5-2	5-3⅞	5-6	6	0-8	4	5-1
18	2½	7	2-9½	6-0	6-2½	6-4⅝	6	0-10	4	5-11
24	3	7	3-4½	7-8	7-11¾	8-1⅛	6	1-0	4	7-9
30	3½	7	3-11½	9-0	9-4¾	9-6⅞	6	1-3	4	9-2
36	4	7½	4-6½	10-6	11-0	11-2⅞	6	1-5	4	10-9
42	4½	7½	5-1½	11-10	12-5	12-7⅛	6	1-8	4	12-2
48	5	7½	5-8½	13-4	14-0⅛	14-2¼	6	1-10½	4	13-10
54	5½	8	6-3½	14-8	15-5⅛	15-7¼	6	2-1	4	15-3
60	6	8	6-10½	16-4	17-2½	17-4⅝	6	2-3	4	16-11
66	6½	8	7-7	18-4	19-3¾	19-6⅛	6½	2-6½	4	19-1
72	7	8	8-2	19-8	20-8⅝	20-11⅛	7	2-9	4	20-6
84	8	8	9-4	22-4	23-6⅜	23-9¼	8	3-2	4	23-3
96	9	8	10-5	25-0	26-4⅝	26-7¼	8	3-6	4	26-4
108	10	8	11-7	27-8	29-2⅛	29-8⅜	9	4-0	4	29-2

PIPE DIA	W1 NO	W1 SIZE	W1 X	W1 X1	W1 LGTH	W2 NO	W2 SIZE	W2 X	W2 X1	W2 LGTH	W3 NO	W3 SIZE	W3 X	W3 X1	W3 LGTH	W4 NO	W4 SIZE	W4 X	W4 X1	W4 LGTH
15	4	#4	1-1	1-8	2-9	6	#4	1-0	1-0	2-0	2	#4	1-0	0-10	1-10					
18	4	#4	1-3	2-0	3-3	2	#4	1-3	1-10	3-1	8	#4	1-1	1-0	2-1					
24	4	#4	1-8	2-7	4-3	8	#4	1-4	1-7	2-11	6	#4	1-0	1-0	2-0					
30	4	#4	2-1	3-2	5-3	8	#4	1-7	2-2	3-9	8	#4	1-1	1-2	2-3					
36	4	#5	2-5	3-9	6-2	8	#4	2-0	2-9	4-9	8	#4	1-5	1-9	3-2	4	#4	1-1	1-7	2-8
42	4	#5	2-11	4-4	7-3	8	#5	2-3	3-4	5-7	10	#4	1-7	2-4	4-1	4	#4	1-0	1-4	2-4
48	4	#5	3-1	4-10	7-11	8	#5	2-8	3-10	6-6	10	#4	2-0	2-10	4-10	8	#4	1-3	1-10	3-1
54	4	#5	3-6	5-4	8-10	10	#5	3-0	4-4	7-4	8	#5	2-3	3-4	5-7	10	#4	1-8	2-4	4-0
60	4	#5	3-10	5-11	9-9	10	#5	3-3	4-11	8-2	8	#5	2-6	3-11	6-5	10	#4	1-10	2-11	4-9
66	4	#6	4-3	6-8	10-11	10	#5	3-8	5-8	9-4	8	#5	3-2	4-8	7-10	8	#5	2-7	3-8	6-3
72	6	#6	4-9	7-5	12-2	8	#6	4-2	6-5	10-7	8	#5	3-6	5-5	8-11	10	#5	2-10	4-5	7-3
84	6	#6	5-5	8-7	14-0	6	#6	5-2	7-7	12-9	10	#6	4-6	6-7	11-1	8	#5	3-9	5-7	9-4
96	6	#7	5-7	9-6	15-1	8	#7	5-7	8-6	14-1	10	#6	5-0	7-6	12-6	8	#5	4-4	6-6	10-10
108	8	#7	6-5	10-9	17-2	10	#7	6-5	9-9	16-2	8	#7	5-10	8-9	14-7	8	#6	5-2	7-9	12-11

PIPE DIA	W5 NO	W5 SIZE	W5 X	W5 X1	W5 LGTH	W6 NO	W6 SIZE	W6 X	W6 X1	W6 LGTH	W7 NO	W7 SIZE	W7 X	W7 X1	W7 LGTH	W8 NO	W8 SIZE	W8 X	W8 X1	W8 LGTH
15																				
18																				
24																				
30																				
36																				
42																				
48																				
54																				
60	4	#4	1-4	2-0	3-4															
66	10	#4	1-10	2-8	4-6															
72	8	#4	2-0	3-5	5-5	4	#4	1-8	2-5	4-1										
84	8	#5	3-2	4-7	7-9	10	#5	2-6	3-7	6-1										
96	6	#5	3-8	5-6	9-2	6	#5	3-0	4-6	7-6	6	#5	2-2	3-10	6-0					
108	6	#5	4-6	6-9	11-3	8	#5	3-10	5-9	9-7	6	#5	3-2	4-9	7-11	4	#5	3-1	4-6	7-7

PIPE DIA	Y1 NO	Y1 LGTH	Y2 NO	Y2 LGTH	Y3 NO	Y3 LGTH	Y4 NO	Y4 LGTH	Y5 NO	Y5 LGTH	Y6 NO	Y6 LGTH	Y7 NO	Y7 LGTH	Y8 NO	Y8 LGTH
15	2	3-5	2	6-2												
18	2	3-5	2	7-0												
24	2	3-5	2	7-8												
30	2	3-5	2	7-5	2	10-2										
36	2	3-5	2	7-9	4	11-10										
42	2	3-5	2	7-5	2	12-4	2	13-3								
48	2	3-5	2	7-8	2	11-8	4	14-10								
54	2	3-5	2	7-8	2	12-3	4	16-3								
60	2	3-5	2	7-8	2	11-8	2	16-5	4	18-1						
66	2	3-5	2	7-8	2	12-4	2	16-5	6	20-3						
72	2	3-5	2	7-8	2	11-9	2	16-5	2	20-9	4	21-8				
84	2	3-5	2	7-8	2	11-7	2	16-5	2	20-9	6	24-6				
96	2	3-6	2	7-6	2	12-6	2	16-6	2	20-3	2	25-3	6	27-4		
108	2	3-9	2	7-6	2	11-6	2	16-0	2	19-9	2	24-9	2	29-9	8	31-8

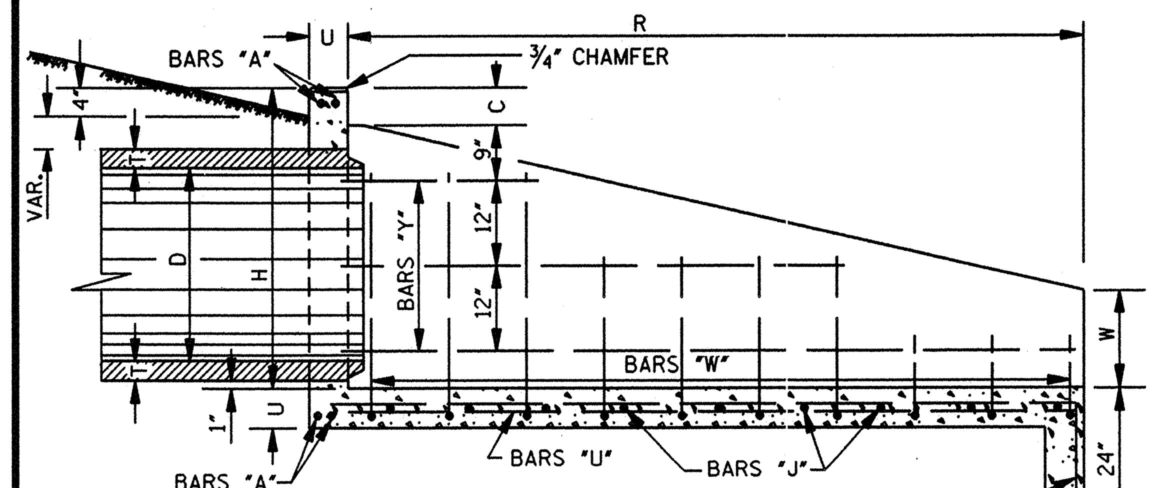

SECTION B–B

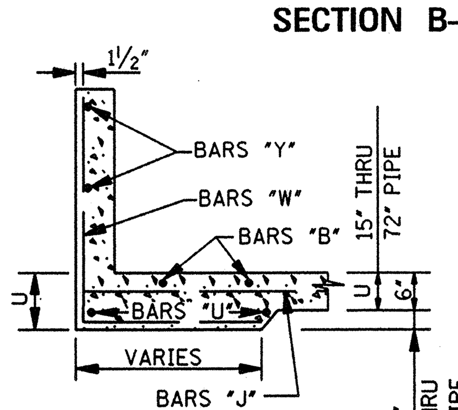

SECTION A–A

DIMENSIONS AND REINFORCING FOR FLARED HEADWALL FOR SINGLE LINE PIPE CULVERT

PIPE DIA	DIMENSIONS A	B	E	G	X	Y	Z	REINFORCING STEEL A NO	A LGTH	B NO	B LGTH	C NO	C LGTH	D NO	D LGTH
15	-	-	-	3-3¾	6-0⅛	2-3	-	4	6-8	4	6-10	2	2-8	2	1-10
18	-	-	-	3-6¾	6-10⅜	2-6	-	4	7-3	5	7-8	2	3-0	2	2-0
24	-	-	-	4-1¾	8-8	3-1	-	4	8-5	5	9-4	2	3-7	2	2-3
30	-	-	-	4-9¼	10-3⅛	3-8½	-	4	9-8	6	10-8	2	4-2	2	2-6
36	-	-	-	5-3¾	11-10¾	4-3	-	4	10-9	7	12-2	2	4-9	2	2-9
42	-	-	-	5-10¾	13-5⅜	4-10	-	4	11-11	7	13-6	2	5-4	2	3-0
48	-	-	-	6-5¾	15-1½	5-5	-	4	13-1	8	15-0	2	5-11	2	3-3
54	-	-	-	7-1¾	16-9⅛	6-1	-	4	14-4	8	16-4	2	6-6	2	3-6
60	-	-	-	7-8¾	18-6⅝	6-8	-	4	15-6	9	18-0	2	7-1	2	3-9
66	-	-	-	8-4⅛	20-7⅛	7-3	-	4	16-11	9	20-0	2	7-10	2	4-3
72	-	-	-	9-0⅛	22-1¾	7-10	-	4	18-2	10	21-4	2	8-6	2	4-7
84	5-0	20-0	2-0	10-5	25-3⅛	9-0	-	4	20-8	11	24-0	2	9-8	2	5-3
96	5-8	22-4	2-0	11-7	28-4⅜	10-2	-	4	22-11	12	26-8	2	10-9	2	5-9
108	6-4	25-0	2-0	12-11⅛	31-5¾	11-4	-	4	25-5	14	29-4	2	12-0	2	6-4

PIPE DIA	J1 NO	J1 LGTH	J2 NO	J2 LGTH	J3 NO	J3 LGTH	J4 NO	J4 LGTH	J5 NO	J5 LGTH	J6 NO	J6 LGTH	J7 NO	J7 LGTH	J8 NO	J8 LGTH	J9 NO	J9 LGTH	J10 NO	J10 LGTH	J11 NO	J11 LGTH	J12 NO	J12 LGTH	J13 NO	J13 LGTH	J14 NO	J14 LGTH
15	1	3-1	1	3-10	1	4-7	1	5-4	1	6-1	1	6-5																
18	1	3-4	1	4-1	1	4-10	1	5-7	1	6-4	1	7-0	1	7-3														
24	1	4-0	1	4-8	1	5-5	1	6-2	1	6-11	1	7-8	1	8-4	1	9-0												
30	1	4-7	1	5-4	1	6-1	1	6-10	1	7-6	1	8-3	1	9-0	1	9-9	1	10-5	1	10-8								
36	1	5-2	1	5-11	1	6-8	1	7-4	1	8-1	1	8-10	1	9-7	1	10-4	1	11-0	1	11-9	1	12-4						
42	1	5-8	1	6-5	1	7-2	1	7-11	1	8-7	1	9-4	1	10-1	1	10-10	1	11-7	1	12-4	1	13-0	1	13-10				
48	1	6-4	1	7-0	1	7-9	1	8-6	1	9-3	1	9-11	1	10-8	1	11-5	1	12-1	1	12-10	1	13-7	1	14-4	1	15-0	1	15-6
54	1	7-1	1	7-9	1	8-6	1	9-3	1	9-11	1	10-8	1	11-5	1	12-1	1	12-10	1	13-7	1	14-4	1	15-0	1	15-9	1	16-6
60	1	7-7	1	8-4	1	9-1	1	9-9	1	10-6	1	11-3	1	12-0	1	12-8	1	13-5	1	14-2	1	14-11	1	15-7	1	16-4	1	17-1
66	1	8-3	1	8-11	1	9-8	1	10-5	1	11-2	1	11-10	1	12-7	1	13-4	1	14-1	1	14-9	1	15-6	1	16-3	1	17-0	1	17-9
72	1	8-10	1	9-7	1	10-3	1	11-0	1	11-9	1	12-6	1	13-2	1	13-11	1	14-8	1	15-5	1	16-1	1	16-10	1	17-7	1	18-3
84	1	10-1	1	10-10	1	11-7	1	12-3	1	13-0	1	13-9	1	14-6	1	15-3	1	15-11	1	16-8	1	17-5	1	18-2	1	18-10	1	19-7
96	1	11-7	1	12-4	1	13-1	1	13-9	1	14-6	1	15-3	1	16-0	1	16-9	1	17-5	1	18-2	1	18-11	1	19-8	1	20-4	1	21-1
108	1	12-11	1	13-8	1	14-5	1	15-2	1	15-10	1	16-7	1	17-4	1	18-1	1	18-9	1	19-6	1	20-3	1	21-0	1	21-8	1	22-5

PIPE DIA	J15 NO	J15 LGTH	J16 NO	J16 LGTH	J17 NO	J17 LGTH	J18 NO	J18 LGTH	J19 NO	J19 LGTH	J20 NO	J20 LGTH	J21 NO	J21 LGTH	J22 NO	J22 LGTH	J23 NO	J23 LGTH	J24 NO	J24 LGTH	J25 NO	J25 LGTH	J26 NO	J26 LGTH	J27 NO	J27 LGTH	J28 NO	J28 LGTH	PAY QTY 1-HEADWALL CONC CU YDS	STEEL LBS
15																													1.07	106
18																													1.37	131
24																													2.02	166
30																													2.72	229
36																													3.53	310
42																													4.42	376
48																													5.47	473
54	1	17-2																											6.56	562
60	1	17-9	1	18-6	1	18-11																							7.91	682
66	1	18-5	1	19-2	1	19-11	1	20-8	1	21-0																			10.49	865
72	1	19-0	1	19-9	1	20-6	1	21-2	1	21-11	1	22-7																	12.95	1039
84	1	20-4	1	21-0	1	21-9	1	22-6	1	23-3	1	23-11	1	24-8	1	25-5	1	25-9											17.89	1384
96	1	21-10	1	22-6	1	23-3	1	24-0	1	24-9	1	25-5	1	26-2	1	26-11	1	27-8	1	28-4	1	28-11							22.20	1766
108	1	23-2	1	23-10	1	24-7	1	25-4	1	26-1	1	26-9	1	27-6	1	28-3	1	29-0	1	29-8	1	31-5	1	32-2	1	32-11	1	33-1	30.00	2430

DIMENSIONS AND REINFORCING FOR FLARED HEADWALL FOR DOUBLE LINE PIPE CULVERT

PIPE DIA	DIMENSIONS A	B	E	G	X	Y	Z	REINFORCING STEEL A NO	A LGTH	B NO	B LGTH	C NO	C LGTH	D NO	D LGTH
15	-	-	-	5-10¾	8-7⅛	4-10	1-0	4	9-3	7	6-10	3	2-8	4	1-10
18	-	-	-	6-4¾	9-8⅜	5-4	1-0	4	10-1	8	7-8	3	3-0	4	2-0
24	-	-	-	7-6¾	12-1	6-6	1-0	4	11-10	9	9-4	3	3-7	4	2-3
30	-	-	-	9-0¾	14-6⅝	8-0	1-3	4	13-11	10	10-8	4	4-2	4	2-6
36	-	-	-	10-4¾	16-11¾	9-4	1-6	4	15-10	12	12-2	4	4-9	4	2-9
42	-	-	-	11-9¾	19-4⅜	10-9	1-9	4	17-10	13	13-6	4	5-4	4	3-0
48	-	-	-	13-2¾	21-10½	12-2	2-0	4	19-10	15	15-0	4	5-11	4	3-3
54	-	-	-	14-9¾	24-5⅛	13-9	2-3	4	22-0	16	16-4	5	6-6	4	3-6
60	-	-	-	16-2¾	27-0⅝	15-2	2-6	4	24-0	17	18-0	5	7-1	4	3-9
66	-	-	-	17-8⅞	29-11⅛	16-7	2-9	4	26-3	18	20-0	5	7-10	4	4-3
72	-	-	-	19-2⅞	32-3¾	18-0	3-0	4	28-4	20	21-4	5	8-6	4	4-7
84	3-0	31-10	13-10	22-3	37-1⅛	20-10	3-6	4	33-6	23	24-0	6	9-9	4	5-3
96	3-0	35-10	15-6	25-1	41-10⅜	23-8	4-0	4	37-5	26	26-9	7	10-9	4	5-9
108	3-0	40-2	17-2	28-1⅛	46-7¾	26-6	4-6	4	41-7	29	29-5	7	12-0	4	6-4

PIPE DIA	J1 NO	J1 LGTH	J2 NO	J2 LGTH	J3 NO	J3 LGTH	J4 NO	J4 LGTH	J5 NO	J5 LGTH	J6 NO	J6 LGTH	J7 NO	J7 LGTH	J8 NO	J8 LGTH	J9 NO	J9 LGTH	J10 NO	J10 LGTH	J11 NO	J11 LGTH	J12 NO	J12 LGTH	J13 NO	J13 LGTH	J14 NO	J14 LGTH
15	1	5-8	1	6-5	1	7-2	1	7-11	1	8-8	1	9-0																
18	1	6-2	1	6-11	1	7-8	1	8-5	1	9-2	1	9-10	1	10-1														
24	1	7-5	1	8-1	1	8-10	1	9-7	1	10-4	1	11-1	1	11-9	1	12-5												
30	1	8-10	1	9-7	1	10-4	1	11-1	1	11-9	1	12-6	1	13-3	1	14-0	1	14-8	1	15-1								
36	1	10-3	1	11-0	1	11-9	1	12-5	1	13-2	1	13-11	1	14-8	1	15-5	1	16-1	1	16-10	1	17-5						
42	1	11-7	1	12-4	1	13-1	1	13-9	1	14-6	1	15-3	1	16-0	1	16-9	1	17-6	1	18-3	1	18-11	1	19-9				
48	1	13-1	1	13-9	1	14-6	1	15-3	1	16-0	1	16-8	1	17-5	1	18-2	1	18-10	1	19-7	1	20-4	1	21-1	1	21-9	1	22-3
54	1	14-9	1	15-5	1	16-2	1	16-11	1	17-7	1	18-4	1	19-1	1	19-9	1	20-6	1	21-3	1	22-0	1	22-8	1	23-5	1	24-2
60	1	16-1	1	16-10	1	17-7	1	18-3	1	19-0	1	19-9	1	20-6	1	21-2	1	21-11	1	22-8	1	23-5	1	24-1	1	24-10	1	25-7
66	1	17-7	1	18-3	1	19-0	1	19-9	1	20-6	1	21-2	1	21-11	1	22-8	1	23-5	1	24-1	1	24-10	1	25-7	1	26-4	1	27-1
72	1	19-0	1	19-9	1	20-5	1	21-2	1	21-11	1	22-8	1	23-4	1	24-1	1	24-10	1	25-7	1	26-3	1	27-0	1	27-9	1	28-5
84	1	21-11	1	22-8	1	23-5	1	24-1	1	24-10	1	25-7	1	26-4	1	27-1	1	27-9	1	28-6	1	29-3	1	31-0	1	31-8	1	32-5
96	1	25-1	1	25-10	1	26-7	1	27-3	1	28-0	1	28-9	1	29-6	1	31-3	1	31-11	1	32-8	1	33-5	1	34-2	1	34-10	1	35-7
108	1	28-1	1	28-10	1	29-7	1	31-4	1	32-0	1	32-9	1	33-6	1	34-3	1	34-11	1	35-8	1	36-5	1	37-2	1	37-10	1	38-7

PIPE DIA	J15 NO	J15 LGTH	J16 NO	J16 LGTH	J17 NO	J17 LGTH	J18 NO	J18 LGTH	J19 NO	J19 LGTH	J20 NO	J20 LGTH	J21 NO	J21 LGTH	J22 NO	J22 LGTH	J23 NO	J23 LGTH	J24 NO	J24 LGTH	J25 NO	J25 LGTH	J26 NO	J26 LGTH	J27 NO	J27 LGTH	J28 NO	J28 LGTH	PAY QTY 1-HEADWALL CONC CU YDS	STEEL LBS
15																													1.46	141
18																													1.84	172
24																													2.68	224
30																													3.64	306
36																													4.76	412
42																													5.99	505
48																													7.44	637
54	1	24-10																											8.97	765
60	1	26-3	1	27-0	1	27-5																							10.83	917
66	1	27-9	1	28-6	1	29-3	1	30-0	1	30-4																			14.44	1150
72	1	29-2	1	29-11	1	31-8	1	32-4	1	33-1	1	33-9																	17.96	1370
84	1	33-2	1	33-10	1	34-7	1	35-4	1	36-1	1	36-9	1	37-6	1	38-3	1	38-7											22.99	1833
96	1	36-4	1	37-0	1	37-9	1	38-6	1	39-3	1	39-11	1	40-8	1	41-5	1	42-2	1	42-10	1	43-7							30.83	2337
108	1	39-4	1	40-0	1	40-9	1	41-6	1	42-3	1	42-11	1	43-8	1	44-5	1	45-2	1	45-10	1	46-7	1	47-4	1	48-0	1	48-9	40.94	3115

DIMENSIONS AND REINFORCING FOR FLARED HEADWALL FOR TRIPLE LINE PIPE CULVERT

PIPE DIA	DIMENSIONS A	B	E	G	X	Y	Z	REINFORCING STEEL A NO	A LGTH	B NO	B LGTH	C NO	C LGTH	D NO	D LGTH
15	-	-	-	8-5¾	11-2⅛	7-5	1-0	4	11-10	10	6-10	4	2-8	6	1-10
18	-	-	-	9-2¾	12-6⅜	8-2	1-0	4	12-11	11	7-8	4	3-0	6	2-0
24	-	-	-	10-11¾	15-6	9-11	1-0	4	15-3	13	9-4	4	3-7	6	2-3
30	-	-	-	13-4¼	18-10⅛	12-3½	1-3	4	18-3	14	10-8	6	4-2	6	2-6
36	-	-	-	15-5¾	22-0¾	14-5	1-6	4	20-11	17	12-2	6	4-9	6	2-9
42	-	-	-	17-8¾	25-3⅜	16-8	1-9	4	23-9	19	13-6	6	5-4	6	3-0
48	-	-	-	19-11¾	28-7½	18-11	2-0	4	26-7	22	15-0	6	5-11	6	3-3
54	-	-	-	22-5¾	32-1⅛	21-5	2-3	4	29-8	24	16-4	8	6-6	6	3-6
60	-	-	-	24-8¾	35-6⅝	23-8	2-6	4	33-6	25	18-0	8	7-1	6	3-9
66	-	-	-	27-0⅞	39-3⅛	25-11	2-9	4	36-7	27	20-0	8	7-10	6	4-3
72	-	-	-	29-4⅞	42-5¾	28-2	3-0	4	39-6	30	21-4	8	8-6	6	4-7
84	3-0	43-8	25-8	34-1	48-11⅛	32-8	3-6	4	45-4	35	24-0	10	9-9	6	5-3
96	3-0	49-4	29-0	38-7	55-4⅜	37-2	4-0	4	50-11	39	26-9	12	10-9	6	5-9
108	3-0	55-4	32-4	43-3⅛	61-9¾	41-8	4-6	4	56-9	44	29-5	12	12-0	6	6-4

PIPE DIA	J1 NO	J1 LGTH	J2 NO	J2 LGTH	J3 NO	J3 LGTH	J4 NO	J4 LGTH	J5 NO	J5 LGTH	J6 NO	J6 LGTH	J7 NO	J7 LGTH	J8 NO	J8 LGTH	J9 NO	J9 LGTH	J10 NO	J10 LGTH	J11 NO	J11 LGTH	J12 NO	J12 LGTH	J13 NO	J13 LGTH	J14 NO	J14 LGTH
15	1	8-3	1	9-0	1	9-9	1	10-6	1	11-3	1	11-7																
18	1	9-0	1	9-9	1	10-6	1	11-3	1	12-0	1	12-8	1	12-11														
24	1	10-10	1	11-6	1	12-3	1	13-0	1	13-9	1	14-6	1	15-2	1	15-10												
30	1	13-1	1	13-10	1	14-7	1	15-4	1	16-0	1	16-9	1	17-6	1	18-3	1	18-11	1	19-4								
36	1	15-4	1	16-1	1	16-10	1	17-6	1	18-3	1	19-0	1	19-9	1	20-6	1	21-2	1	21-11	1	22-6						
42	1	17-6	1	18-3	1	19-0	1	19-8	1	20-5	1	21-2	1	21-11	1	22-8	1	23-5	1	24-2	1	24-10	1	25-8				
48	1	19-10	1	20-6	1	21-3	1	22-0	1	22-9	1	23-5	1	24-2	1	24-11	1	25-7	1	26-4	1	27-1	1	27-10	1	28-6	1	29-0
54	1	22-5	1	23-1	1	23-10	1	24-7	1	25-3	1	26-0	1	26-9	1	27-5	1	28-2	1	28-11	1	29-8	1	31-4	1	32-1	1	32-10
60	1	24-7	1	25-4	1	26-1	1	26-9	1	27-6	1	28-3	1	29-0	1	29-8	1	31-5	1	32-2	1	32-11	1	33-7	1	34-4	1	35-1
66	1	26-11	1	27-7	1	28-4	1	29-1	1	29-10	1	31-6	1	32-3	1	33-0	1	33-9	1	34-5	1	35-2	1	35-11	1	36-8	1	37-5
72	1	29-2	1	29-11	1	31-7	1	32-4	1	33-1	1	33-10	1	34-6	1	35-3	1	36-0	1	36-9	1	37-5	1	38-2	1	38-11	1	39-7
84	1	34-9	1	35-6	1	36-3	1	36-11	1	37-8	1	38-5	1	39-2	1	39-11	1	40-7	1	41-4	1	42-1	1	42-10	1	43-6	1	44-3
96	1	39-7	1	40-4	1	41-1	1	41-9	1	42-6	1	43-3	1	44-0	1	44-9	1	45-5	1	46-2	1	46-11	1	47-8	1	48-4	1	49-1
108	1	44-3	1	45-0	1	45-9	1	46-6	1	47-2	1	47-11	1	48-8	1	49-5	1	50-1	1	50-10	1	51-7	1	52-4	1	53-0	1	53-9

PIPE DIA	J15 NO	J15 LGTH	J16 NO	J16 LGTH	J17 NO	J17 LGTH	J18 NO	J18 LGTH	J19 NO	J19 LGTH	J20 NO	J20 LGTH	J21 NO	J21 LGTH	J22 NO	J22 LGTH	J23 NO	J23 LGTH	J24 NO	J24 LGTH	J25 NO	J25 LGTH	J26 NO	J26 LGTH	J27 NO	J27 LGTH	J28 NO	J28 LGTH	PAY QTY 1-HEADWALL CONC CU YDS	STEEL LBS
15																													1.85	176
18																													2.31	213
24																													3.34	282
30																													4.56	384
36																													5.99	514
42																													7.56	633
48																													9.41	800
54	1	33-6																											11.38	970
60	1	35-9	1	36-6	1	36-11																							13.75	1160
66	1	38-1	1	38-10	1	39-7	1	40-4	1	40-8																			18.39	1447
72	1	40-4	1	41-1	1	41-10	1	42-6	1	43-3	1	43-11																	22.97	1711
84	1	45-0	1	45-8	1	46-5	1	47-2	1	47-11	1	48-7	1	49-4	1	50-1	1	50-5											26.72	2280
96	1	49-10	1	50-6	1	51-3	1	52-0	1	52-9	1	53-5	1	54-2	1	54-11	1	55-8	1	56-4	1	57-1							39.66	2879
108	1	54-6	1	55-2	1	55-11	1	56-8	1	57-5	1	58-1	1	58-10	1	59-7	1	61-4	1	62-0	1	62-9	1	63-6	1	64-2	1	64-11	52.28	3788

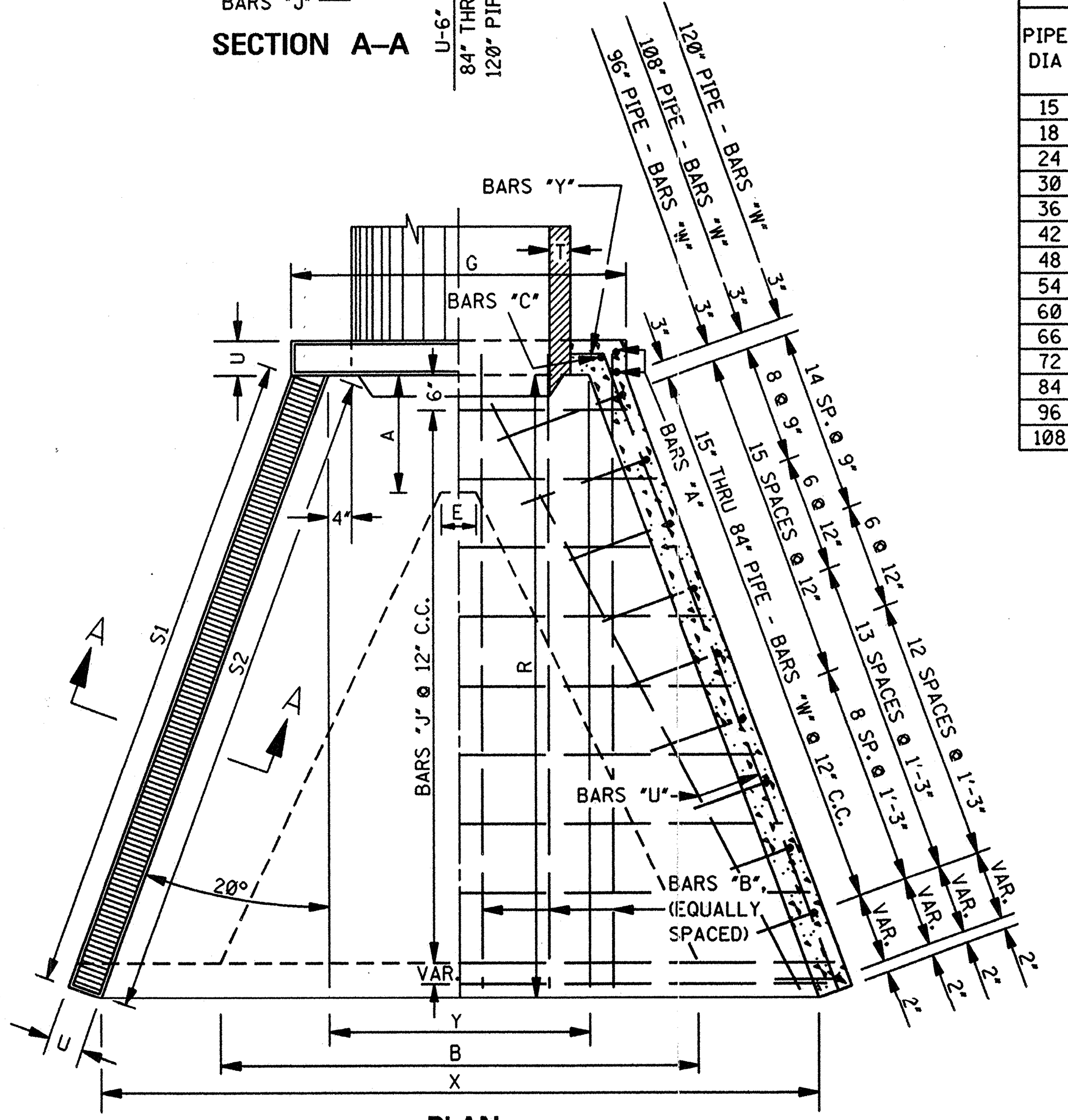

PLAN

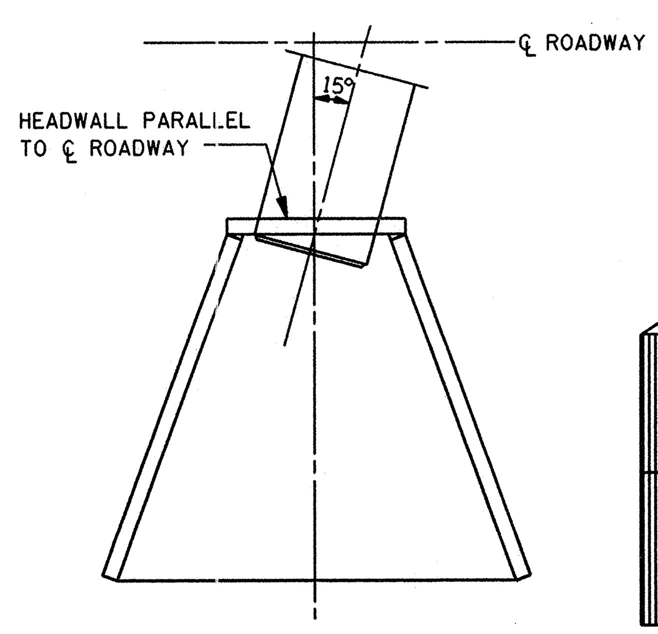

15° SKEW INSTALLATION PLAN

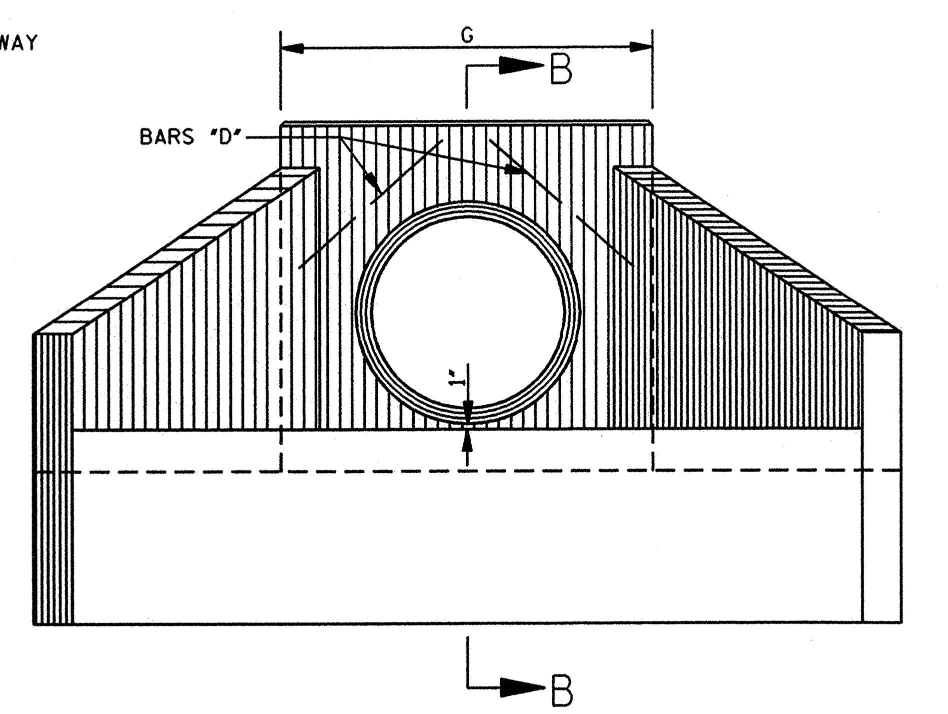

FRONT ELEVATION

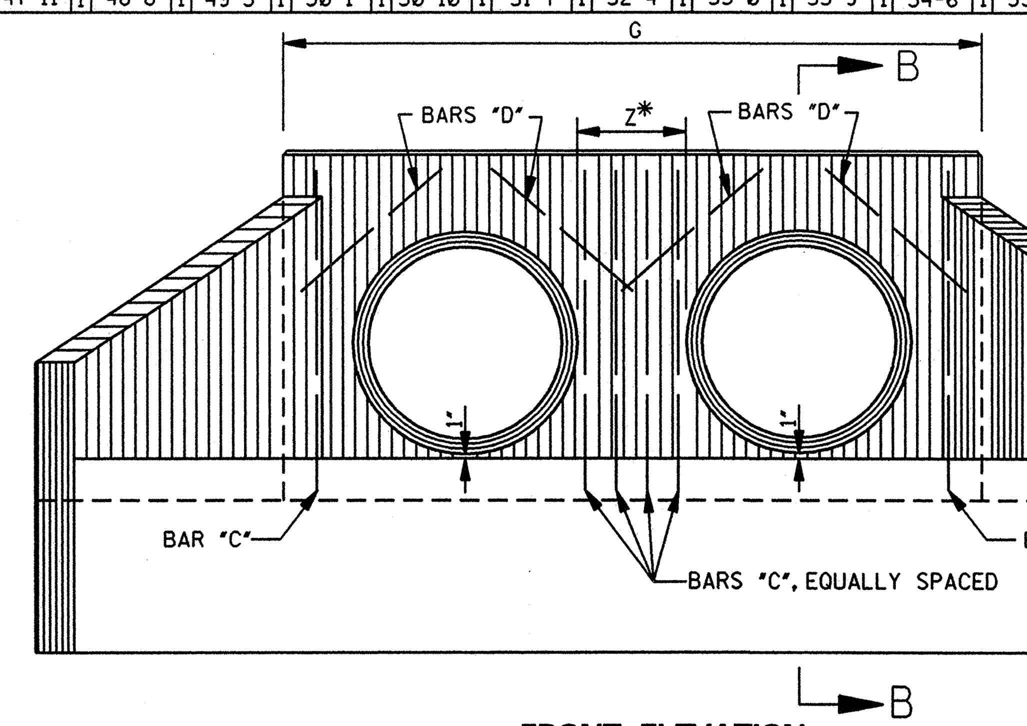

FRONT ELEVATION

*NOTE: MEASURE NORMAL (PERPENDICULAR) TO PIPE.

BY	MISSISSIPPI DEPARTMENT OF TRANSPORTATION ROADWAY DESIGN DIVISION STANDARD PLAN
REVISION	**HEADWALLS FOR CONCRETE PIPE 4:1 SLOPE – 0°– 15°SKEW** DEPARTMENT OF TRANSPORTATION – ENGLISH – MISSISSIPPI WORKING NUMBER HW-4100
DATE	ISSUE DATE: OCTOBER 1, 1998 — SHEET NUMBER 346

STATE	PROJECT NO.
MISS.	

DIMENSIONS AND REINFORCING COMMON TO FLARED HEADWALLS FOR SINGLE, DOUBLE AND TRIPLE LINE PIPE CULVERTS

PIPE DIA	MIN THK "T"	C	H	R	S1	S2	U	W	US NO	US LGTH	UL NO	UL LGTH
		DIMENSIONS							REINFORCING STEEL			
15	2¼	7	2-5	5-2	6-9⅝	7-3⅝	6	0-8	2	5-2	2	6-7
18	2½	7	2-9½	6-0	7-11⅞	8-5⅞	6	0-10	2	6-0	2	7-9
24	3	7	3-4½	7-8	10-4⅛	10-10⅛	6	1-0	2	7-8	2	10-2
30	3½	7	3-11½	9-0	12-2¾	12-8¾	6	1-3	2	9-0	2	12-0
36	4	7½	4-6½	10-6	14-4⅛	14-10⅛	6	1-5	2	10-6	2	14-2
42	4½	7½	5-1½	11-10	16-2⅞	16-8⅞	6	1-8	2	11-10	2	16-0
48	5	7½	5-8½	13-4	18-4¼	18-10¼	6	1-10½	2	13-4	2	18-2
54	5½	8	6-3½	14-8	20-2⅞	20-8⅞	6	2-1	2	14-8	2	20-0
60	6	8	6-10½	16-4	22-7⅞	23-1⅛	6	2-3	2	16-4	2	22-3
66	6½	8	7-7	18-4	25-4⅝	25-11⅛	6½	2-6½	2	18-4	2	25-2
72	7	8	8-2	19-8	27-2¾	27-9¾	7	2-9	2	19-8	2	27-0
84	8	8	9-4	22-4	30-11	31-7	8	3-2	2	22-4	2	31-9
96	9	8	10-5	25-0	34-8¼	35-4¼	8	3-6	2	25-0	2	35-6
108	10	8	11-7	27-8	38-4½	39-1½	9	4-0	2	27-8	2	39-2

PIPE DIA	W1 S NO	W1 L NO	W1 SIZE	W1 X	W1 X1	W1 LGTH	W2 S NO	W2 L NO	W2 SIZE	W2 X	W2 X1	W2 LGTH	W3 S NO	W3 L NO	W3 SIZE	W3 X	W3 X1	W3 LGTH	W4 S NO	W4 L NO	W4 SIZE	W4 X	W4 X1	W4 LGTH
15	3	4	#4	1-1	1-8	2-9	3	4	#4	1-0	1-0	2-0												
18	3	4	#4	1-3	2-0	3-3	4	6	#4	1-0	1-0	2-0												
24	3	4	#4	1-8	2-7	4-3	4	5	#4	1-4	1-7	2-11	2	2	#4	1-0	1-2	2-2						
30	3	4	#4	2-1	3-2	5-3	4	5	#4	1-7	2-2	3-9	3	4	#4	1-1	1-3	2-4						
36	3	4	#5	2-5	3-9	6-2	4	5	#4	2-0	2-9	4-9	4	6	#4	1-2	1-9	2-11						
42	3	4	#5	2-11	4-4	7-3	4	5	#4	2-3	3-4	5-7	4	6	#4	1-7	2-4	3-11	2	2	#4	1-2	1-10	3-0
48	3	4	#5	3-1	4-10	7-11	4	5	#5	2-8	3-10	6-6	4	6	#4	1-10	2-10	4-8	3	4	#4	1-3	2-0	3-3
54	3	4	#5	3-6	5-4	8-10	4	5	#5	3-0	4-4	7-4	4	6	#4	2-3	3-4	5-7	4	5	#4	1-7	2-4	3-11
60	3	4	#5	3-10	5-11	9-9	4	5	#5	3-3	4-11	8-2	4	6	#5	2-6	3-11	6-5	4	5	#4	1-10	2-11	4-9
66	3	4	#6	4-3	6-8	10-11	4	5	#5	3-8	5-8	9-4	4	6	#5	3-2	4-8	7-10	4	5	#5	2-7	3-8	6-3
72	3	4	#6	4-9	7-5	12-2	4	5	#6	4-2	6-5	10-7	4	6	#5	3-6	5-5	8-11	4	5	#5	2-10	4-5	7-3
84	3	4	#6	5-5	8-7	14-0	4	5	#6	5-2	7-7	12-9	4	6	#6	4-6	6-7	11-1	4	5	#5	3-9	5-7	9-4
96	3	4	#7	5-7	9-6	15-1	6	8	#7	5-7	8-6	14-1	4	5	#6	5-0	7-6	12-6	3	4	#5	4-4	6-6	10-10
108	3	4	#7	6-5	10-9	17-2	6	8	#7	6-5	9-9	16-2	4	5	#7	5-10	8-9	14-7	3	5	#6	5-2	7-9	12-11

PIPE DIA	W5 S NO	W5 L NO	W5 SIZE	W5 X	W5 X1	W5 LGTH	W6 S NO	W6 L NO	W6 SIZE	W6 X	W6 X1	W6 LGTH	W7 S NO	W7 L NO	W7 SIZE	W7 X	W7 X1	W7 LGTH	W8 S NO	W8 L NO	W8 SIZE	W8 X	W8 X1	W8 LGTH
15																								
18																								
24																								
30																								
36																								
42																								
48																								
54		1	#4	1-6	2-3	3-9																		
60	2	4	#4	1-8	2-4	4-0																		
66	4	6	#4	1-10	2-8	4-6																		
72	4	6	#4	2-0	3-5	5-5	2	2	#4	1-11	3-0	4-11												
84	4	6	#5	3-2	4-7	7-9	4	6	#5	2-6	3-7	6-1												
96	3	5	#5	3-8	5-6	9-2	3	4	#5	3-0	4-6	7-6	2	4	#5	2-2	3-10	6-0						
108	4	4	#5	4-6	6-9	11-3	3	5	#5	3-10	5-9	9-7	3	4	#5	3-2	4-9	7-11	2	3	#5	2-10	4-5	7-3

PIPE DIA	YS1 NO	YS1 LGTH	YS2 NO	YS2 LGTH	YS3 NO	YS3 LGTH	YS4 NO	YS4 LGTH	YS5 NO	YS5 LGTH	YS6 NO	YS6 LGTH	YS7 NO	YS7 LGTH	YS8 NO	YS8 LGTH
15	1	3-3	1	5-10												
18	1	3-3	1	6-8												
24	1	3-3	1	7-3	1	8-4										
30	1	3-3	1	7-3	1	9-8										
36	1	3-3	1	7-3	2	11-2										
42	1	3-3	1	7-3	1	11-3	1	12-6								
48	1	3-3	1	7-3	1	11-3	2	14-0								
54	1	3-3	1	7-3	1	11-3	1	15-3	1	15-4						
60	1	3-3	1	7-3	1	11-3	1	15-3	2	17-0						
66	1	3-3	1	7-3	1	11-3	1	15-3	3	19-0						
72	1	3-4	1	7-4	1	11-4	1	15-4	1	19-4	2	20-6				
84	1	3-5	1	7-5	1	11-5	1	15-5	1	19-5	3	23-3				
96	1	3-4	1	7-10	1	11-10	1	15-7	1	19-4	1	23-1	3	26-3		
108	1	3-0	1	7-6	1	11-6	1	14-6	1	19-6	1	23-3	1	27-0	3	28-7

PIPE DIA	YL1 NO	YL1 LGTH	YL2 NO	YL2 LGTH	YL3 NO	YL3 LGTH	YL4 NO	YL4 LGTH	YL5 NO	YL5 LGTH	YL6 NO	YL6 LGTH	YL7 NO	YL7 LGTH	YL8 NO	YL8 LGTH
15	1	4-10	1	8-1												
18	1	4-10	1	9-3												
24	1	4-10	1	9-10	1	11-7										
30	1	4-10	1	9-10	1	13-6										
36	1	4-10	1	9-10	2	15-7										
42	1	4-10	1	9-10	1	15-10	1	17-6								
48	1	4-10	1	9-10	1	15-10	2	19-7								
54	1	4-10	1	9-10	1	15-10	1	20-10	1	21-6						
60	1	4-10	1	9-10	1	15-10	1	20-10	2	23-10						
66	1	4-11	1	9-11	1	15-11	1	20-11	2	26-9						
72	1	4-11	1	9-11	1	15-11	1	20-11	1	26-11	2	28-7				
84	1	4-11	1	9-11	1	15-11	1	20-11	1	26-11	3	33-4				
96	1	4-2	1	10-2	1	15-2	1	20-2	1	26-5	1	32-5	3	37-0		
108	1	4-4	1	10-4	1	15-4	1	20-4	1	25-4	1	31-4	1	36-4	4	40-10

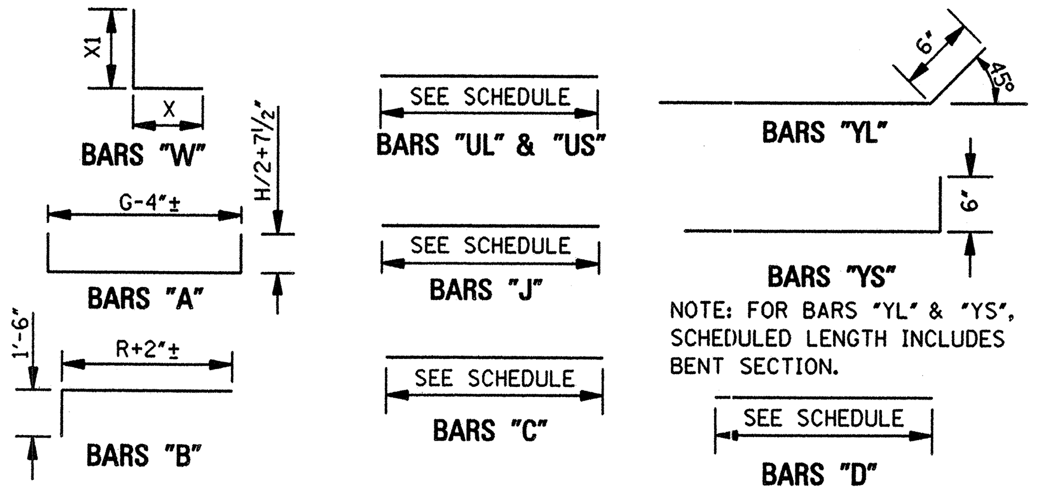

NOTE: FOR BARS "YL" & "YS", SCHEDULED LENGTH INCLUDES BENT SECTION.

BAR BENDING DETAILS

NOTE: WHENEVER THE COMPUTED LENGTH OF BAR EXCEEDS 30', THE SCHEDULED LENGTH INCLUDES A 12" LAP. ALL BARS ARE #4 EXCEPT BARS "W". SEE SCHEDULE FOR SIZE OF BARS "W". IN BAR DESIGNATIONS (e.g. "YS" & "YL"), S DENOTES SHORT WING AND L DENOTES LONG WING.

GENERAL NOTES:

1. SPECIFICATIONS: MISSISSIPPI DEPARTMENT OF TRANSPORTATION, LATEST EDITION.
2. ALL CONCRETE SHALL BE CLASS "B".
3. ALL EXPOSED EDGES SHALL BE CHAMFERED ¾".
4. EXPOSED CONCRETE SURFACES SHALL BE FINISHED IN ACCORDANCE WITH THE APPLICABLE SECTION OF THE MDOT SPECIFICATIONS.
5. ALL LENGTHS AND QUANTITIES IN THE TABLES HEREON ARE BASED ON CONCRETE PIPE.
6. QUANTITIES SHOWN SHALL BE THE BASIS FOR FINAL PAYMENT UNLESS AUTHORIZED MODIFICATIONS ARE MADE.

DIMENSIONS AND REINFORCING FOR FLARED HEADWALL FOR SINGLE LINE PIPE CULVERT

PIPE DIA	A	B	E	G	X	Y	Z	A NO	A LGTH	B NO	B LGTH	C NO	C LGTH	D NO	D LGTH	PAY QTY 1-HEADWALL CONC CU YDS	PAY QTY 1-HEADWALL STEEL LBS
	DIMENSIONS							REINFORCING STEEL									
15	-	-	-	3-8½	7-8	2-6	-	4	7-0	5	6-10	2	2-8	2	1-10	1.28	125
18	-	-	-	4-0	8-9⅜	2-9⅜	-	4	7-8	5	7-8	2	3-0	2	2-0	1.63	142
24	-	-	-	4-8	11-1½	3-5½	-	4	8-11	6	9-4	2	3-7	2	2-3	2.42	211
30	-	-	-	5-4⅝	13-2⅛	4-2⅛	-	4	10-3	7	10-8	2	4-2	2	2-6	3.24	262
36	-	-	-	6-0⅛	15-3⅝	4-9⅝	-	4	11-5	7	12-2	2	4-9	2	2-9	4.22	358
42	-	-	-	6-8¼	17-3¾	5-5¾	-	4	12-8	8	13-6	2	5-4	2	3-0	5.29	429
48	-	-	-	7-4¼	19-5⅞	6-1⅞	-	4	13-11	9	15-0	2	5-11	2	3-3	6.55	557
54	-	-	-	8-1½	21-7	6-11	-	4	15-4	9	16-4	2	6-6	2	3-6	7.86	633
60	-	-	-	8-9⅝	23-11⅛	7-7⅛	-	4	16-7	10	18-0	2	7-1	2	3-9	9.49	796
66	-	-	-	9-7	26-7¼	8-3¼	-	4	18-1	11	20-0	2	7-10	2	4-3	12.59	1013
72	-	-	-	10-4¼	28-7⅜	8-11⅜	-	4	19-5	11	21-4	2	8-6	2	4-7	15.54	1193
84	3-2	22-4	2-0	11-10¾	32-7½	10-3½	-	4	22-2	13	24-0	2	9-8	2	5-3	21.40	1639
96	3-6	25-0	2-0	13-3	36-7⅝	11-7⅝	-	4	24-7	15	26-8	2	10-9	2	5-9	26.49	2155
108	4-0	27-8	2-0	14-9½	40-7⅞	12-11⅞	-	4	27-4	16	29-4	2	12-0	2	6-4	34.16	2775

PIPE DIA	J1 NO	J1 LGTH	J2 NO	J2 LGTH	J3 NO	J3 LGTH	J4 NO	J4 LGTH	J5 NO	J5 LGTH	J6 NO	J6 LGTH	J7 NO	J7 LGTH	J8 NO	J8 LGTH	J9 NO	J9 LGTH	J10 NO	J10 LGTH	J11 NO	J11 LGTH	J12 NO	J12 LGTH	J13 NO	J13 LGTH	J14 NO	J14 LGTH
15	1	3-10	1	4-10	1	5-10	1	6-10	1	7-10	1	8-3																
18	1	4-2	1	5-2	1	6-2	1	7-2	1	8-2	1	9-2	1	9-4														
24	1	4-10	1	5-10	1	6-10	1	7-10	1	8-10	1	9-10	1	10-10	1	11-8												
30	1	5-7	1	6-7	1	7-7	1	8-7	1	9-7	1	10-7	1	11-7	1	12-7	1	13-7										
36	1	6-2	1	7-2	1	8-2	1	9-2	1	10-2	1	11-2	1	12-2	1	13-2	1	14-2	1	15-2	1	15-10						
42	1	6-10	1	7-10	1	8-10	1	9-10	1	10-10	1	11-10	1	12-10	1	13-10	1	14-10	1	15-10	1	16-10	1	17-10				
48	1	7-6	1	8-6	1	9-6	1	10-6	1	11-6	1	12-6	1	13-6	1	14-6	1	15-6	1	16-6	1	17-6	1	18-6	1	19-6	1	20-0
54	1	8-4	1	9-4	1	10-4	1	11-4	1	12-4	1	13-4	1	14-4	1	15-4	1	16-4	1	17-4	1	18-4	1	19-4	1	20-4	1	21-4
60	1	9-0	1	10-0	1	11-0	1	12-0	1	13-0	1	14-0	1	15-0	1	16-0	1	17-0	1	18-0	1	19-0	1	20-0	1	21-0	1	22-0
66	1	9-9	1	10-9	1	11-9	1	12-9	1	13-9	1	14-9	1	15-9	1	16-9	1	17-9	1	18-9	1	19-9	1	20-9	1	21-9	1	22-9
72	1	10-6	1	11-6	1	12-6	1	13-6	1	14-6	1	15-6	1	16-6	1	17-6	1	18-6	1	19-6	1	20-6	1	21-6	1	22-6	1	23-6
84	1	12-1	1	13-1	1	14-1	1	15-1	1	16-1	1	17-1	1	18-1	1	19-1	1	20-1	1	21-1	1	22-1	1	23-1	1	24-1	1	25-1
96	1	13-5	1	14-5	1	15-5	1	16-5	1	17-5	1	18-5	1	19-5	1	20-5	1	21-5	1	22-5	1	23-5	1	24-5	1	25-5	1	26-5
108	1	15-0	1	16-0	1	17-0	1	18-0	1	19-0	1	20-0	1	21-0	1	22-0	1	23-0	1	24-0	1	25-0	1	26-0	1	27-0	1	28-0

PIPE DIA	J15 NO	J15 LGTH	J16 NO	J16 LGTH	J17 NO	J17 LGTH	J18 NO	J18 LGTH	J19 NO	J19 LGTH	J20 NO	J20 LGTH	J21 NO	J21 LGTH	J22 NO	J22 LGTH	J23 NO	J23 LGTH	J24 NO	J24 LGTH	J25 NO	J25 LGTH	J26 NO	J26 LGTH	J27 NO	J27 LGTH	J28 NO	J28 LGTH
15																												
18																												
24																												
30																												
36																												
42																												
48																												
54	1	22-1																										
60	1	23-0	1	24-0	1	24-5																						
66	1	23-9	1	24-9	1	25-9	1	26-9	1	27-2																		
72	1	24-6	1	25-6	1	26-6	1	27-6	1	28-6	1	29-2																
84	1	26-1	1	27-1	1	28-1	1	29-1	1	31-1	1	32-1	1	33-1	1	34-1	1	34-4										
96	1	27-5	1	28-5	1	29-5	1	31-5	1	32-5	1	33-5	1	34-5	1	35-5	1	36-5	1	37-5	1	38-4						
108	1	29-0	1	30-0	1	32-0	1	33-0	1	34-0	1	35-0	1	36-0	1	37-0	1	38-0	1	39-0	1	40-0	1	41-0	1	42-0	1	42-5

DIMENSIONS AND REINFORCING FOR FLARED HEADWALL FOR DOUBLE LINE PIPE CULVERT

PIPE DIA	A	B	E	G	X	Y	Z	A NO	A LGTH	B NO	B LGTH	C NO	C LGTH	D NO	D LGTH	PAY QTY 1-HEADWALL CONC CU YDS	PAY QTY 1-HEADWALL STEEL LBS
	DIMENSIONS							REINFORCING STEEL									
15	-	-	-	6-8¼	10-7¾	5-5¾	1-0	4	10-0	8	6-10	3	2-8	4	1-10	1.76	163
18	-	-	-	7-3¼	12-0⅝	6-0⅝	1-0	4	11-0	8	7-8	3	3-0	4	2-0	2.23	185
24	-	-	-	8-7⅜	15-0⅞	7-4⅞	1-0	4	12-11	10	9-4	3	3-7	4	2-3	3.27	273
30	-	-	-	10-4⅛	18-1⅝	9-1⅝	1-3	4	15-3	11	10-8	4	4-2	4	2-6	4.46	343
36	-	-	-	11-10½	21-2	10-8	1-6	4	17-4	13	12-2	4	4-9	4	2-9	5.86	476
42	-	-	-	13-6¼	24-1¾	12-3¾	1-9	4	19-6	15	13-6	4	5-4	4	3-0	7.39	576
48	-	-	-	15-1¾	27-3⅜	13-11⅜	2-0	4	21-9	16	15-0	4	5-11	4	3-3	9.21	734
54	-	-	-	16-11¾	30-5¼	15-9¼	2-3	4	24-2	18	16-4	5	6-6	4	3-6	11.13	862
60	-	-	-	18-7⅜	33-8⅞	17-4⅞	2-6	4	26-5	20	18-0	5	7-1	4	3-9	13.47	1076
66	-	-	-	20-4¼	37-4⅝	19-0⅝	2-9	4	28-10	21	20-0	5	7-10	4	4-3	17.81	1339
72	-	-	-	22-1⅛	40-4¼	20-8¼	3-0	4	32-2	23	21-4	6	8-6	4	4-7	22.05	1592
84	3-2	36-0	15-8	25-6¾	46-3½	23-11½	3-6	4	36-10	27	24-0	6	9-8	4	5-3	29.52	2154
96	3-6	40-7	17-7	28-10	52-2⅝	27-2⅝	4-0	4	41-2	30	26-8	7	10-9	4	5-9	36.73	2780
108	4-0	45-2	19-6	32-3⅝	58-2	30-6	4-6	4	45-10	34	29-4	7	12-0	4	6-4	47.42	3564

PIPE DIA	J1 NO	J1 LGTH	J2 NO	J2 LGTH	J3 NO	J3 LGTH	J4 NO	J4 LGTH	J5 NO	J5 LGTH	J6 NO	J6 LGTH	J7 NO	J7 LGTH	J8 NO	J8 LGTH	J9 NO	J9 LGTH	J10 NO	J10 LGTH	J11 NO	J11 LGTH	J12 NO	J12 LGTH	J13 NO	J13 LGTH	J14 NO	J14 LGTH
15	1	6-10	1	7-10	1	8-10	1	9-10	1	10-10	1	11-2																
18	1	7-5	1	8-5	1	9-5	1	10-5	1	11-5	1	12-7	1	12-8														
24	1	8-9	1	9-9	1	10-9	1	11-9	1	12-9	1	13-9	1	14-9	1	15-7												
30	1	10-6	1	11-6	1	12-6	1	13-6	1	14-6	1	15-6	1	16-6	1	17-6	1	18-8										
36	1	12-1	1	13-1	1	14-1	1	15-1	1	16-1	1	17-1	1	18-1	1	19-1	1	20-1	1	21-1	1	21-8						
42	1	13-8	1	14-8	1	15-8	1	16-8	1	17-8	1	18-8	1	19-8	1	20-8	1	21-8	1	22-8	1	23-8	1	24-8				
48	1	15-4	1	16-4	1	17-4	1	18-4	1	19-4	1	20-4	1	21-4	1	22-4	1	23-4	1	24-4	1	25-4	1	26-4	1	27-4	1	27-9
54	1	17-2	1	18-2	1	19-2	1	20-2	1	21-2	1	22-2	1	23-2	1	24-2	1	25-2	1	26-2	1	27-2	1	28-2	1	29-2	1	31-2
60	1	18-9	1	19-9	1	20-9	1	21-9	1	22-9	1	23-9	1	24-9	1	25-9	1	26-9	1	27-9	1	28-9	1	29-9	1	31-9	1	32-9
66	1	20-6	1	21-6	1	22-6	1	23-6	1	24-6	1	25-6	1	26-6	1	27-6	1	28-6	1	29-6	1	31-6	1	32-6	1	33-6	1	34-6
72	1	22-3	1	23-3	1	24-3	1	25-3	1	26-3	1	27-3	1	28-3	1	29-3	1	31-3	1	32-3	1	33-3	1	34-3	1	35-3	1	36-3
84	1	25-9	1	26-9	1	27-9	1	28-9	1	29-9	1	31-9	1	32-9	1	33-9	1	34-9	1	35-9	1	36-9	1	37-9	1	38-9	1	39-9
96	1	29-0	1	30-0	1	32-0	1	33-0	1	34-0	1	35-0	1	36-0	1	37-0	1	38-0	1	39-0	1	40-0	1	41-0	1	42-0	1	43-0
108	1	33-6	1	34-6	1	35-6	1	36-6	1	37-6	1	38-6	1	39-6	1	40-6	1	41-6	1	42-6	1	43-6	1	44-6	1	45-6	1	46-6

PIPE DIA	J15 NO	J15 LGTH	J16 NO	J16 LGTH	J17 NO	J17 LGTH	J18 NO	J18 LGTH	J19 NO	J19 LGTH	J20 NO	J20 LGTH	J21 NO	J21 LGTH	J22 NO	J22 LGTH	J23 NO	J23 LGTH	J24 NO	J24 LGTH	J25 NO	J25 LGTH	J26 NO	J26 LGTH	J27 NO	J27 LGTH	J28 NO	J28 LGTH
15																												
18																												
24																												
30																												
36																												
42																												
48																												
54	1	31-11																										
60	1	33-9	1	34-9	1	35-3																						
66	1	35-6	1	36-6	1	37-6	1	38-6	1	38-11																		
72	1	37-3	1	38-3	1	39-3	1	40-3	1	41-3	1	41-11																
84	1	40-9	1	41-9	1	42-9	1	43-9	1	44-9	1	45-9	1	46-9	1	47-9	1	47-11										
96	1	44-0	1	45-0	1	46-0	1	47-0	1	48-0	1	49-0	1	50-0	1	51-0	1	52-0	1	53-0	1	53-11						
108	1	47-6	1	48-6	1	49-6	1	50-6	1	51-6	1	52-6	1	53-6	1	54-6	1	55-6	1	56-6	1	57-6	1	58-6	1	59-6	1	59-11

DIMENSIONS AND REINFORCING FOR FLARED HEADWALL FOR TRIPLE LINE PIPE CULVERT

PIPE DIA	A	B	E	G	X	Y	Z	A NO	A LGTH	B NO	B LGTH	C NO	C LGTH	D NO	D LGTH	PAY QTY 1-HEADWALL CONC CU YDS	PAY QTY 1-HEADWALL STEEL LBS
	DIMENSIONS							REINFORCING STEEL									
15	-	-	-	9-8	13-7½	8-5½	1-0	4	13-0	11	6-10	4	2-8	6	1-10	2.25	201
18	-	-	-	10-6⅜	15-4	9-4	1-0	4	14-3	12	7-8	4	3-0	6	2-0	2.82	231
24	-	-	-	12-6⅝	19-0	11-4¼	1-0	4	16-10	14	9-4	4	3-7	6	2-3	4.13	335
30	-	-	-	15-3½	23-1	14-1	1-3	4	20-2	16	10-8	6	4-2	6	2-6	5.68	430
36	-	-	-	17-9	27-0½	16-6½	1-6	4	23-2	19	12-2	6	4-9	6	2-9	7.50	593
42	-	-	-	20-4¼	30-11¾	19-1¾	1-9	4	26-4	21	13-6	6	5-4	6	3-0	9.50	716
48	-	-	-	22-11⅜	35-0⅞	21-8⅞	2-0	4	29-7	24	15-0	6	5-11	6	3-3	11.87	924
54	-	-	-	25-10	39-3½	24-7½	2-3	4	34-0	27	16-4	8	6-6	6	3-6	14.40	1098
60	-	-	-	28-5¼	43-6¾	27-2¾	2-6	4	37-3	29	18-0	8	7-1	6	3-9	17.44	1351
66	-	-	-	31-1⅝	48-1⅛	29-9⅛	2-9	4	40-8	32	20-0	8	7-10	6	4-3	23.04	1670
72	-	-	-	33-10	52-1	32-5	3-0	4	43-11	35	21-4	10	8-6	6	4-7	28.55	1985
84	3-2	49-8	29-4	39-2¾	59-11⅜	37-7⅜	3-6	4	50-6	40	24-0	10	9-8	6	5-3	37.65	2647
96	3-6	56-2	33-2	44-5⅛	67-9¾	42-9¾	4-0	4	56-9	45	26-8	14	10-9	6	5-9	46.98	3415
108	4-0	62-8	37-0	49-9⅞	75-8	48-0	4-6	4	64-4	50	29-4	14	12-0	6	6-4	60.68	4331

PIPE DIA	J1 NO	J1 LGTH	J2 NO	J2 LGTH	J3 NO	J3 LGTH	J4 NO	J4 LGTH	J5 NO	J5 LGTH	J6 NO	J6 LGTH	J7 NO	J7 LGTH	J8 NO	J8 LGTH	J9 NO	J9 LGTH	J10 NO	J10 LGTH	J11 NO	J11 LGTH	J12 NO	J12 LGTH	J13 NO	J13 LGTH	J14 NO	J14 LGTH
15	1	9-10	1	10-10	1	11-10	1	12-10	1	13-10	1	14-2																
18	1	10-8	1	11-8	1	12-8	1	13-8	1	14-8	1	15-10	1	15-11														
24	1	12-9	1	13-9	1	14-9	1	15-9	1	16-9	1	17-9	1	18-9	1	19-6												
30	1	15-5	1	16-5	1	17-5	1	18-5	1	19-5	1	20-5	1	21-5	1	22-5	1	23-7										
36	1	17-11	1	18-11	1	19-11	1	20-11	1	21-11	1	22-11	1	23-11	1	24-11	1	25-11	1	26-11	1	27-6						
42	1	20-6	1	21-6	1	22-6	1	23-6	1	24-6	1	25-6	1	26-6	1	27-6	1	28-6	1	29-6	1	31-6	1	32-6				
48	1	23-1	1	24-1	1	25-1	1	26-1	1	27-1	1	28-1	1	29-1	1	31-1	1	32-1	1	33-1	1	34-1	1	35-1	1	36-1	1	36-7
54	1	26-0	1	27-0	1	28-0	1	29-0	1	30-0	1	32-0	1	33-0	1	34-0	1	35-0	1	36-0	1	37-0	1	38-0	1	39-0	1	40-0
60	1	28-7	1	29-7	1	31-7	1	32-7	1	33-7	1	34-7	1	35-7	1	36-7	1	37-7	1	38-7	1	39-7	1	40-7	1	41-7	1	42-7
66	1	32-4	1	33-4	1	34-4	1	35-4	1	36-4	1	37-4	1	38-4	1	39-4	1	40-4	1	41-4	1	42-4	1	43-4	1	44-4	1	45-4
72	1	35-0	1	36-0	1	37-0	1	38-0	1	39-0	1	40-0	1	41-0	1	42-0	1	43-0	1	44-0	1	45-0	1	46-0	1	47-0	1	48-0
84	1	40-5	1	41-5	1	42-5	1	43-5	1	44-5	1	45-5	1	46-5	1	47-5	1	48-5	1	49-5	1	50-5	1	51-5	1	52-5	1	53-5
96	1	45-7	1	46-7	1	47-7	1	48-7	1	49-7	1	50-7	1	51-7	1	52-7	1	53-7	1	54-7	1	55-7	1	56-7	1	57-7	1	58-7
108	1	51-0	1	52-0	1	53-0	1	54-0	1	55-0	1	56-0	1	57-0	1	58-0	1	59-0	1	60-0	1	62-0	1	63-0	1	64-0	1	65-0

PIPE DIA	J15 NO	J15 LGTH	J16 NO	J16 LGTH	J17 NO	J17 LGTH	J18 NO	J18 LGTH	J19 NO	J19 LGTH	J20 NO	J20 LGTH	J21 NO	J21 LGTH	J22 NO	J22 LGTH	J23 NO	J23 LGTH	J24 NO	J24 LGTH	J25 NO	J25 LGTH	J26 NO	J26 LGTH	J27 NO	J27 LGTH	J28 NO	J28 LGTH
15																												
18																												
24																												
30																												
36																												
42																												
48																												
54	1	40-10																										
60	1	43-7	1	44-7	1	45-1																						
66	1	46-4	1	47-4	1	48-4	1	49-4	1	49-8																		
72	1	49-0	1	50-0	1	51-0	1	52-0	1	53-0	1	53-8																
84	1	54-5	1	55-5	1	56-5	1	57-5	1	58-5	1	59-5	1	61-5	1	62-5	1	62-8										
96	1	59-7	1	61-7	1	62-7	1	63-7	1	64-7	1	65-7	1	66-7	1	67-7	1	68-7	1	69-7	1	70-6						
108	1	66-0	1	67-0	1	68-0	1	69-0	1	70-0	1	71-0	1	72-0	1	73-0	1	74-0	1	75-0	1	76-0	1	77-0	1	78-0	1	78-5

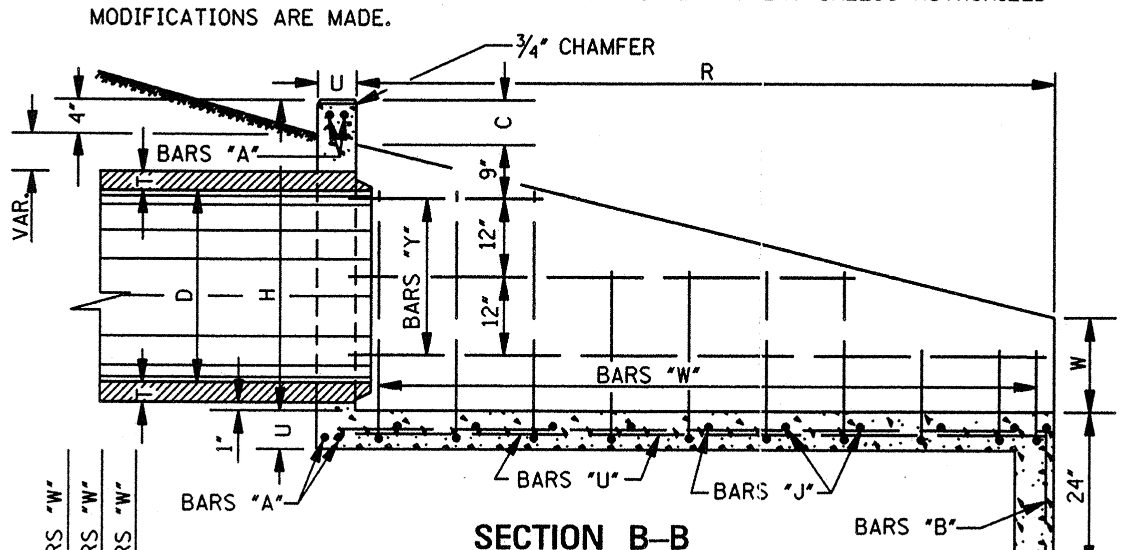

SECTION B–B

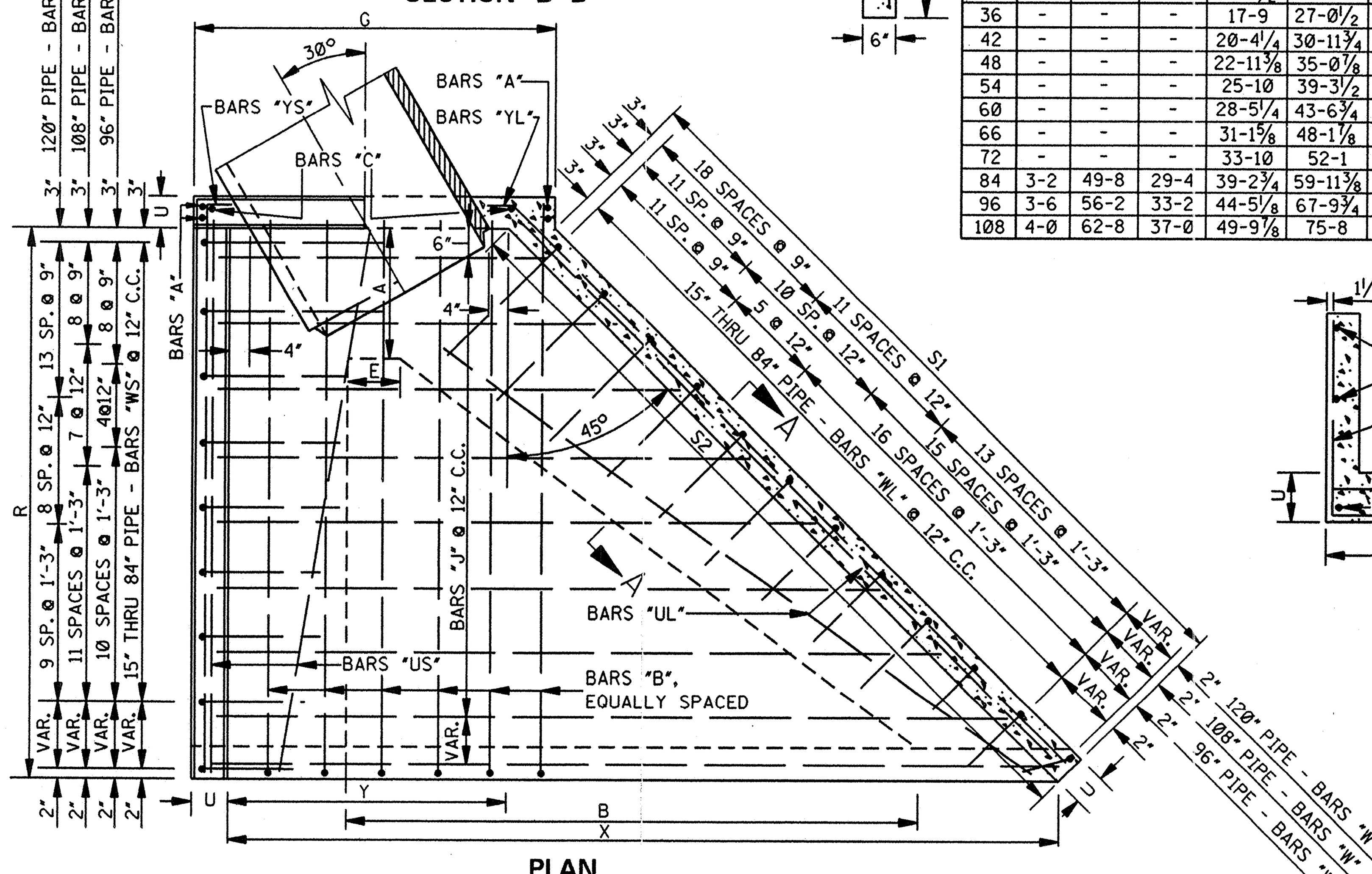

PLAN

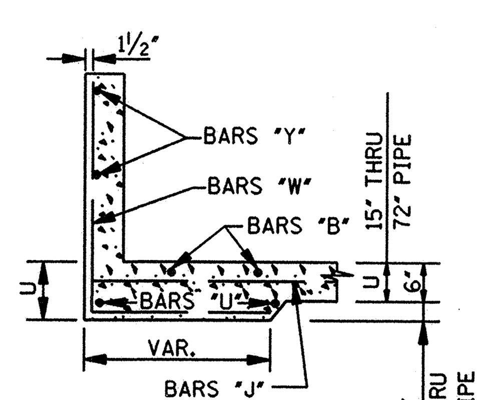

SECTION A–A

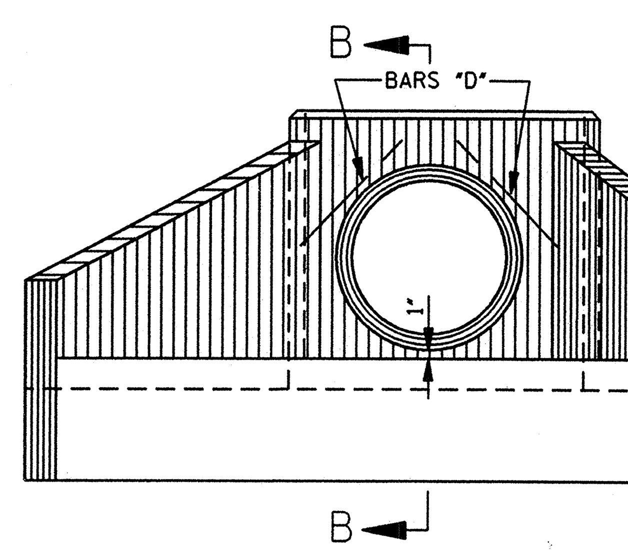

FRONT ELEVATION

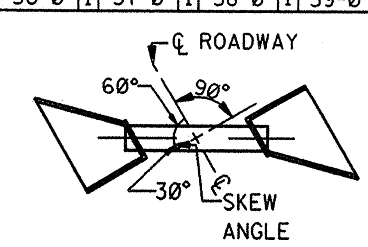

INSTALLATION

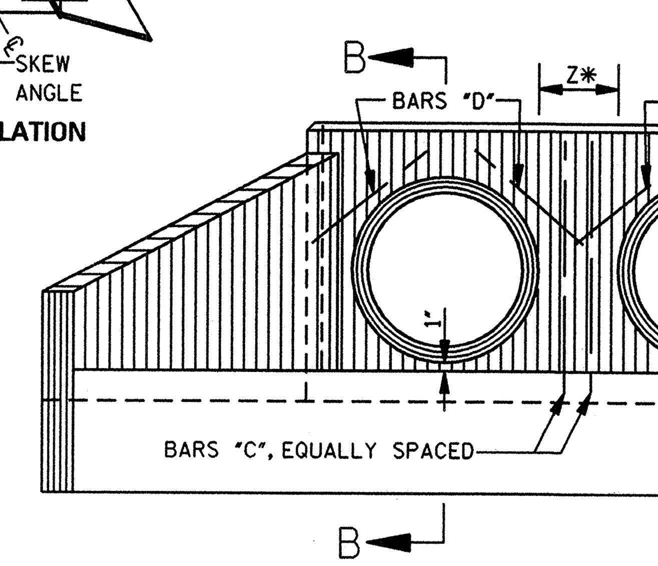

FRONT ELEVATION

*NOTE: MEASURE NORMAL (PERPENDICULAR) TO PIPE.

				BY	MISSISSIPPI DEPARTMENT OF TRANSPORTATION ROADWAY DESIGN DIVISION STANDARD PLAN
				REVISION	**HEADWALLS FOR CONCRETE PIPE 4:1 SLOPE – 30° SKEW**
				DATE	ISSUE DATE: OCTOBER 1, 1998

ENGLISH

WORKING NUMBER HW-4130

SHEET NUMBER 347

STATE	PROJECT NO.
MISS.	

DIMENSIONS AND REINFORCING COMMON TO FLARED HEADWALLS FOR SINGLE, DOUBLE AND TRIPLE LINE PIPE CULVERTS

PIPE DIA	MIN THK "T"	DIMENSIONS C	H	R	S1	S2	U	W
15	2¼	7	2-5	5-2	9-5⅝	10-4	6	0-8
18	2½	7	2-9½	6-0	11-1⅞	12-0	6	0-10
24	3	7	3-4½	7-8	14-5⅝	15-4	6	1-0
30	3½	7	3-11½	9-0	17-1⅝	18-0	6	1-3
36	4	7½	4-6½	10-6	20-1⅞	21-0	6	1-5
42	4½	7½	5-1½	11-10	22-9⅝	23-8	6	1-8
48	5	7½	5-8½	13-4	25-9⅝	26-8	6	1-10½
54	5½	8	6-3½	14-8	28-5⅝	29-4	6	2-1
60	6	8	6-10½	16-4	31-9⅝	32-8	6	2-3
66	6½	8	7-7	18-4	35-8¼	36-8	6½	2-6½
72	7	8	8-2	19-8	38-4	39-4	7	2-9
84	8	8	9-4	22-4	43-6⅞	44-8	8	3-2
96	9	8	10-5	25-0	48-10⅞	50-0	8	3-6
108	10	8	11-7	27-8	54-0⅞	55-4	9	4-0

PIPE DIA	US NO	US LGTH	UL NO	UL LGTH	W1 S NO	W1 L NO	W1 SIZE	W1 X	W1 X1	W1 LGTH	W2 S NO	W2 L NO	W2 SIZE	W2 X	W2 X1	W2 LGTH
15	2	5-2	2	9-4	3	5	#4	1-1	1-8	2-9	3	5	#4	1-0	1-0	2-0
18	2	6-0	2	11-0	3	5	#4	1-3	2-0	3-3	4	7	#4	1-0	1-0	2-0
24	2	7-8	2	14-4	3	5	#4	1-8	2-7	4-3	4	8	#4	1-4	1-7	2-11
30	2	9-0	2	17-0	3	5	#4	2-1	3-2	5-3	4	8	#4	1-7	2-2	3-9
36	2	10-6	2	20-0	3	5	#5	2-5	3-9	6-2	4	8	#4	2-0	2-9	4-9
42	2	11-10	2	22-8	3	5	#5	2-11	4-4	7-3	4	8	#4	2-3	3-4	5-7
48	2	13-4	2	25-8	3	5	#5	3-1	4-10	7-11	4	8	#5	2-8	3-10	6-6
54	2	14-8	2	28-4	3	5	#5	3-6	5-4	8-10	4	8	#5	3-0	4-4	7-4
60	2	16-4	2	32-8	3	5	#5	3-10	5-11	9-9	4	8	#5	3-3	4-11	8-2
66	2	18-4	2	36-7	3	5	#6	4-3	6-8	10-11	4	8	#5	3-8	5-8	9-4
72	2	19-8	2	39-2	3	5	#6	4-9	7-5	12-2	4	8	#6	4-2	6-5	10-7
84	2	22-4	2	44-4	3	5	#6	5-5	8-7	14-0	4	8	#6	5-2	7-7	12-9
96	2	25-0	2	49-8	3	5	#7	5-7	9-6	15-1	6	8	#7	5-7	8-6	14-1
108	2	27-8	2	54-10	3	6	#7	6-5	10-9	17-2	6	11	#7	6-5	9-9	16-2

PIPE DIA	W3 S NO	W3 L NO	W3 SIZE	W3 X	W3 X1	W3 LGTH	W4 S NO	W4 L NO	W4 SIZE	W4 X	W4 X1	W4 LGTH
15												
18												
24												
30	3	5	#4	1-1	1-3	2-4						
36	3	5	#4	1-2	1-9	2-11						
42	4	7	#4	1-7	2-4	3-11	2	4	#4	1-2	1-10	3-0
48	4	7	#4	1-10	2-10	4-8	3	7	#4	1-3	2-0	3-3
54	4	7	#4	2-3	3-4	5-7	4	9	#4	1-7	2-4	3-11
60	4	7	#5	2-6	3-11	6-5	4	8	#4	1-10	2-11	4-9
66	4	7	#5	2-9	4-5	7-3	4	8	#5	2-7	3-8	6-3
72	4	7	#5	3-6	5-5	8-11	4	8	#5	2-10	4-5	7-3
84	4	7	#6	4-6	6-7	11-1	4	8	#5	3-9	5-7	9-4
96	4	7	#6	5-0	7-6	12-6	3	8	#5	4-4	6-6	10-10
108	4	7	#7	5-10	8-9	14-7	3	8	#6	5-2	7-9	12-11

PIPE DIA	W5 S NO	W5 L NO	W5 SIZE	W5 X	W5 X1	W5 LGTH	W6 S NO	W6 L NO	W6 SIZE	W6 X	W6 X1	W6 LGTH
15												
18												
24												
30												
36												
42	1	2	#4	1-6	2-3	3-9						
48	2	4	#4	1-8	2-4	4-0						
54	3	6	#4	1-10	2-8	4-6						
60	3	5	#4	2-0	3-5	5-5	2	3	#4	1-11	3-0	4-11
66	3	5	#4	3-2	4-7	7-9	4	8	#5	2-6	3-7	6-1
72	3	6	#5	3-8	5-6	9-2	3	7	#5	3-0	4-6	7-6
84	3	6	#5	4-6	6-9	11-3	3	6	#5	3-10	5-9	9-7
96	3	6	#5	5-2	7-9	12-11	3	6	#5	4-9	7-3	12-1
108	3	6	#6	5-8	8-9	14-3	3	6	#5	5-3	8-0	13-3

PIPE DIA	W7 S NO	W7 L NO	W7 SIZE	W7 X	W7 X1	W7 LGTH	W8 S NO	W8 L NO	W8 SIZE	W8 X	W8 X1	W8 LGTH
15												
18												
24												
30												
36												
42												
48												
54												
60												
66												
72	2	5	#5	2-2	3-10	6-0						
84	3	6	#5	3-2	4-9	7-11	2	3	#5	2-10	4-5	7-3
96	3	6	#5	3-10	5-9	9-7	3	6	#5	3-8	5-6	9-2
108	3	6	#5	4-5	6-9	11-3	3	6	#5	4-3	6-3	10-6

PIPE DIA	YS1 NO	YS1 LGTH	YS2 NO	YS2 LGTH	YS3 NO	YS3 LGTH	YS4 NO	YS4 LGTH	YS5 NO	YS5 LGTH	YS6 NO	YS6 LGTH	YS7 NO	YS7 LGTH	YS8 NO	YS8 LGTH	YL1 NO	YL1 LGTH	YL2 NO	YL2 LGTH	YL3 NO	YL3 LGTH	YL4 NO	YL4 LGTH	YL5 NO	YL5 LGTH	YL6 NO	YL6 LGTH	YL7 NO	YL7 LGTH	YL8 NO	YL8 LGTH
15	1	3-3	1	5-10													1	5-9	1	10-8												
18	1	3-3	1	6-8													1	5-9	1	12-4												
24	1	3-3	1	7-3	1	8-4											1	5-9	1	13-9												
30	1	3-3	1	7-3	1	9-8											1	5-9	1	13-9	1	18-4										
36	1	3-3	1	7-3	2	11-2											1	5-9	1	13-9	2	21-3										
42	1	3-3	1	7-3	1	11-3	1	12-6									1	5-9	1	13-9	1	20-9	1	24-0								
48	1	3-3	1	7-3	1	11-3	2	14-0									1	5-9	1	13-9	1	20-9	2	27-0								
54	1	3-3	1	7-3	1	11-3	1	15-3	1	15-4							1	5-9	1	13-9	1	20-9	1	28-9	1	29-8						
60	1	3-3	1	7-3	1	11-3	1	15-3	2	17-0							1	5-9	1	13-9	1	20-9	1	28-9	2	34-0						
66	1	3-3	1	7-3	1	11-3	1	15-3	3	19-0							1	5-11	1	13-11	1	20-11	1	28-11	1	37-11	2	38-1				
72	1	3-4	1	7-4	1	11-4	1	15-4	1	19-4	2	20-6					1	5-11	1	13-11	1	20-11	1	28-11	1	37-11	2	40-8				
84	1	3-5	1	7-5	1	11-5	1	15-5	1	19-5	3	23-3					1	6-1	1	14-1	1	21-1	1	29-1	1	38-1	3	46-1				
96	1	3-4	1	7-10	1	11-10	1	15-7	1	19-4	1	23-1	3	26-3			1	6-1	1	14-1	1	21-1	1	29-1	1	38-10	1	46-4	3	51-4		
108	1	3-0	1	7-6	1	11-6	1	14-6	1	19-6	1	23-3	1	27-0	3	28-7	1	6-0	1	14-3	1	22-3	1	29-3	1	39-0	1	46-6	1	54-0	4	55-8

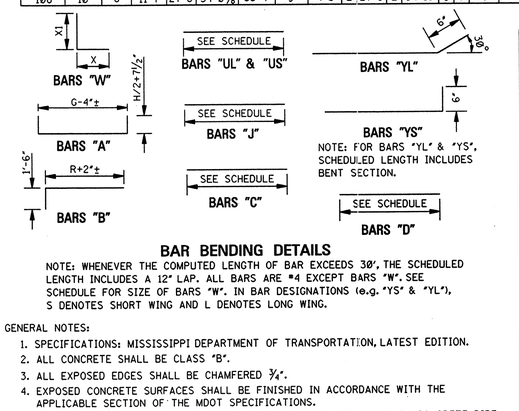

BAR BENDING DETAILS

NOTE: WHENEVER THE COMPUTED LENGTH OF BAR EXCEEDS 30', THE SCHEDULED LENGTH INCLUDES A 12" LAP. ALL BARS ARE #4 EXCEPT BARS "W". SEE SCHEDULE FOR SIZE OF BARS "W". IN BAR DESIGNATIONS (e.g. "YS" & "YL"), S DENOTES SHORT WING AND L DENOTES LONG WING.

GENERAL NOTES:

1. SPECIFICATIONS: MISSISSIPPI DEPARTMENT OF TRANSPORTATION, LATEST EDITION.
2. ALL CONCRETE SHALL BE CLASS "B".
3. ALL EXPOSED EDGES SHALL BE CHAMFERED ¾".
4. EXPOSED CONCRETE SURFACES SHALL BE FINISHED IN ACCORDANCE WITH THE APPLICABLE SECTION OF THE MDOT SPECIFICATIONS.
5. ALL LENGTHS AND QUANTITIES IN THE TABLES HEREON ARE BASED ON CONCRETE PIPE.
6. QUANTITIES SHOWN SHALL BE THE BASIS FOR FINAL PAYMENT UNLESS AUTHORIZED MODIFICATIONS ARE MADE.

DIMENSIONS AND REINFORCING FOR FLARED HEADWALL FOR SINGLE LINE PIPE CULVERT

PIPE DIA	DIMENSIONS A	B	E	G	X	Y	Z	A NO	A LGTH	B NO	B LGTH	C NO	C LGTH	D NO	D LGTH	J1 NO	J1 LGTH	J2 NO	J2 LGTH	J3 NO	J3 LGTH	J4 NO	J4 LGTH	J5 NO	J5 LGTH	J6 NO	J6 LGTH	J7 NO	J7 LGTH
15	-	-	-	4-4⅞	11-10¼	2-10⅞	-	4	7-9	5	6-10	2	2-8	2	1-10	1	4-11	1	6-8	1	8-5	1	10-1	1	11-10	1	12-5		
18	-	-	-	4-9⅞	13-7⅞	3-3⅛	-	4	8-6	5	7-8	2	3-0	2	2-0	1	5-3	1	7-0	1	8-9	1	10-5	1	12-2	1	13-11	1	14-3
24	-	-	-	5-7	17-4⅝	4-1	-	4	9-10	6	9-4	2	3-7	2	2-3	1	6-1	1	7-10	1	9-6	1	11-3	1	13-0	1	14-9	1	16-6
30	-	-	-	6-5⅝	20-6⅝	4-11½	-	4	11-4	7	10-8	2	4-2	2	2-6	1	7-0	1	8-9	1	10-5	1	12-2	1	13-11	1	15-8	1	17-5
36	-	-	-	7-2¾	23-11⅞	5-8⅞	-	4	12-8	8	12-2	2	4-9	2	2-9	1	7-9	1	9-6	1	11-2	1	12-11	1	14-8	1	16-5	1	18-2
42	-	-	-	8-0¾	27-0⅝	6-6¾	-	4	14-2	8	13-6	2	5-4	2	3-0	1	8-7	1	10-4	1	12-0	1	13-9	1	15-6	1	17-3	1	19-0
48	-	-	-	8-10⅝	30-5¾	7-4⅝	-	4	15-6	9	15-0	2	5-11	2	3-3	1	9-5	1	11-2	1	12-10	1	14-8	1	16-4	1	18-1	1	19-10
54	-	-	-	9-9⅞	33-8¾	8-3⅞	-	4	17-0	10	16-4	2	6-6	2	3-6	1	10-4	1	12-1	1	13-9	1	15-6	1	17-3	1	19-0	1	20-9
60	-	-	-	10-7¼	37-5⅞	9-1⅞	-	4	18-6	11	18-0	2	7-1	2	3-9	1	11-2	1	12-10	1	14-8	1	16-4	1	18-1	1	19-10	1	21-7
66	-	-	-	11-7¼	41-8⅞	9-11⅞	-	4	20-1	12	20-0	2	7-10	2	4-3	1	12-1	1	13-10	1	15-6	1	17-3	1	19-0	1	20-9	1	22-6
72	-	-	-	12-6⅝	44-10⅞	10-9⅝	-	4	21-8	13	21-4	2	8-6	2	4-7	1	13-1	1	14-10	1	16-6	1	18-3	1	20-0	1	21-9	1	23-6
84	3-2	38-8	3-0	14-5½	51-1⅝	12-5½	-	4	24-9	15	24-0	2	9-8	2	5-3	1	15-0	1	16-9	1	18-5	1	20-2	1	21-11	1	23-8	1	25-5
96	3-6	43-4	3-0	16-1⅞	57-4¼	14-1¼	-	4	27-5	17	26-8	2	10-9	2	5-9	1	16-7	1	18-4	1	20-0	1	21-9	1	23-6	1	25-3	1	27-0
108	4-0	48-0	3-0	18-0	63-8⅛	15-9	-	4	31-6	19	29-4	2	12-0	2	6-4	1	18-6	1	20-3	1	22-0	1	23-8	1	25-5	1	27-2	1	28-10

PIPE DIA	J8 NO	J8 LGTH	J9 NO	J9 LGTH	J10 NO	J10 LGTH	J11 NO	J11 LGTH	J12 NO	J12 LGTH	J13 NO	J13 LGTH	J14 NO	J14 LGTH	J15 NO	J15 LGTH	J16 NO	J16 LGTH	J17 NO	J17 LGTH	J18 NO	J18 LGTH	J19 NO	J19 LGTH	J20 NO	J20 LGTH	J21 NO	J21 LGTH	J22 NO	J22 LGTH	J23 NO	J23 LGTH	J24 NO	J24 LGTH	J25 NO	J25 LGTH	J26 NO	J26 LGTH	J27 NO	J27 LGTH	J28 NO	J28 LGTH	PAY QTY 1-HEADWALL CONC CU YDS	STEEL LBS
15																																											1.74	149
18																																											2.23	176
24	1	17-11																																									3.33	243
30	1	19-1	1	20-10	1	21-2																																					4.46	331
36	1	19-10	1	21-7	1	23-4	1	24-6																																			5.82	444
42	1	20-8	1	22-5	1	24-2	1	25-11	1	27-8																																	7.28	524
48	1	21-6	1	23-3	1	25-0	1	26-9	1	28-5	1	31-2	1	32-1																													9.04	707
54	1	22-5	1	24-2	1	25-11	1	27-8	1	29-5	1	32-1	1	33-10	1	35-4																											10.84	799
60	1	23-3	1	25-0	1	26-9	1	28-6	1	31-3	1	32-11	1	34-8	1	36-5	1	38-2	1	39-0																							13.10	1002
66	1	24-3	1	25-11	1	27-8	1	29-5	1	32-2	1	33-10	1	35-7	1	37-4	1	39-1	1	40-9	1	42-6	1	43-4																			17.37	1300
72	1	25-3	1	26-11	1	28-8	1	31-5	1	33-2	1	34-10	1	36-7	1	38-4	1	40-1	1	41-9	1	43-6	1	45-3	1	46-6																	21.41	1521
84	1	27-1	1	28-10	1	31-7	1	33-4	1	35-1	1	36-8	1	38-4	1	40-1	1	41-10	1	43-7	1	45-5	1	47-2	1	48-11	1	50-8	1	52-5	1	52-11											28.92	2068
96	1	28-8	1	31-5	1	33-2	1	34-11	1	36-8	1	38-4	1	40-1	1	41-10	1	43-7	1	45-3	1	47-0	1	48-9	1	50-6	1	52-3	1	53-11	1	55-8	1	57-5	1	59-2							35.88	2635
108	1	31-8	1	33-4	1	35-1	1	36-10	1	38-7	1	40-3	1	42-0	1	43-9	1	45-6	1	47-3	1	48-11	1	50-8	1	52-5	1	54-2	1	55-10	1	57-7	1	59-4	1	62-1	1	63-10	1	65-6	1	66-6	48.03	3559

DIMENSIONS AND REINFORCING FOR FLARED HEADWALL FOR DOUBLE LINE PIPE CULVERT

PIPE DIA	DIMENSIONS A	B	E	G	X	Y	Z	A NO	A LGTH	B NO	B LGTH	C NO	C LGTH	D NO	D LGTH	J1 NO	J1 LGTH	J2 NO	J2 LGTH	J3 NO	J3 LGTH	J4 NO	J4 LGTH	J5 NO	J5 LGTH	J6 NO	J6 LGTH	J7 NO	J7 LGTH
15	-	-	-	8-0¾	15-6⅛	6-6¾	1-0	4	11-5	8	6-10	4	2-8	4	1-10	1	8-7	1	10-4	1	12-0	1	13-9	1	15-6	1	16-1		
18	-	-	-	8-9¼	17-8	7-3¼	1-0	4	12-6	9	7-8	4	3-0	4	2-0	1	9-3	1	11-0	1	12-9	1	14-5	1	16-2	1	17-11	1	18-3
24	-	-	-	10-5	22-2⅜	8-11	1-0	4	14-9	11	9-4	4	3-7	4	2-3	1	10-11	1	12-8	1	14-5	1	16-1	1	17-10	1	19-7	1	21-4
30	-	-	-	12-6⅜	26-7⅜	11-0¼	1-3	4	17-5	13	10-8	5	4-2	4	2-6	1	13-0	1	14-9	1	16-5	1	18-2	1	19-11	1	21-8	1	23-5
36	-	-	-	14-5	31-1⅜	12-11⅛	1-6	4	19-11	15	12-2	5	4-9	4	2-9	1	14-11	1	16-8	1	18-4	1	20-1	1	21-10	1	23-7	1	25-4
42	-	-	-	16-5¼	35-5⅛	14-11¼	1-9	4	22-5	17	13-6	5	5-4	4	3-0	1	16-11	1	18-8	1	20-4	1	22-1	1	23-10	1	25-7	1	27-4
48	-	-	-	18-5⅛	40-0¼	16-11⅛	2-0	4	25-1	19	15-0	6	5-11	4	3-3	1	18-11	1	20-8	1	22-4	1	24-1	1	25-10	1	27-7	1	29-4
54	-	-	-	20-8	44-6⅞	19-2	2-3	4	27-11	21	16-4	6	6-6	4	3-6	1	21-2	1	22-11	1	24-8	1	26-4	1	28-1	1	29-10	1	32-7
60	-	-	-	22-8	49-5⅝	21-2⅛	2-6	4	31-6	23	18-0	7	7-1	4	3-9	1	23-2	1	24-11	1	26-8	1	28-4	1	31-1	1	32-10	1	34-7
66	-	-	-	24-9⅞	54-11¼	23-2	2-9	4	34-3	25	20-0	8	7-10	4	4-3	1	25-3	1	27-0	1	28-9	1	31-5	1	33-2	1	34-11	1	36-8
72	-	-	-	26-11⅛	59-2⅞	25-2⅞	3-0	4	37-0	28	21-4	8	8-6	4	4-7	1	27-5	1	29-2	1	31-11	1	33-7	1	35-4	1	37-1	1	38-10
84	3-2	55-7	19-9	31-2¼	67-10⅞	29-2¼	3-6	4	42-5	32	24-0	9	9-8	4	5-3	1	32-8	1	34-5	1	36-2	1	37-10	1	39-7	1	41-4	1	43-1
96	3-6	62-5	22-1	35-2¼	76-6	33-2⅞	4-0	4	47-6	36	26-8	10	10-9	4	5-9	1	36-8	1	38-5	1	40-2	1	41-10	1	43-7	1	45-4	1	47-1
108	4-0	69-5	24-5	39-5⅞	85-1½	37-2⅞	4-6	4	52-11	40	29-4	11	12-0	4	6-4	1	40-11	1	42-8	1	44-5	1	46-1	1	47-10	1	49-7	1	51-4

PIPE DIA	J8 NO	J8 LGTH	J9 NO	J9 LGTH	J10 NO	J10 LGTH	J11 NO	J11 LGTH	J12 NO	J12 LGTH	J13 NO	J13 LGTH	J14 NO	J14 LGTH	J15 NO	J15 LGTH	J16 NO	J16 LGTH	J17 NO	J17 LGTH	J18 NO	J18 LGTH	J19 NO	J19 LGTH	J20 NO	J20 LGTH	J21 NO	J21 LGTH	J22 NO	J22 LGTH	J23 NO	J23 LGTH	J24 NO	J24 LGTH	J25 NO	J25 LGTH	J26 NO	J26 LGTH	J27 NO	J27 LGTH	J28 NO	J28 LGTH	PAY QTY 1-HEADWALL CONC CU YDS	STEEL LBS
15	1	8-7	1	10-4	1	12-0	1	13-9	1	15-6	1	16-1																															2.34	194
18	1	9-3	1	11-0	1	12-9	1	14-5	1	16-2	1	17-11	1	18-3																													2.96	232
24	1	10-11	1	12-8	1	14-5	1	16-1	1	17-10	1	19-7	1	21-4	1	22-9																											4.37	321
30	1	13-0	1	14-9	1	16-5	1	18-2	1	19-11	1	21-8	1	23-5	1	25-2	1	26-10	1	27-2																							5.95	442
36	1	18-4	1	20-1	1	21-10	1	23-7	1	25-4	1	27-0	1	28-9	1	31-6	1	32-8																									7.82	588
42	1	20-4	1	22-1	1	23-10	1	25-7	1	27-4	1	29-0	1	31-9	1	33-6	1	35-3	1	36-11																							9.87	712
48	1	22-11	1	24-8	1	26-4	1	28-1	1	29-10	1	31-7	1	33-4	1	35-6	1	37-3	1	39-0	1	40-9	1	41-7																			12.29	928
54	1	25-4	1	27-1	1	28-11	1	30-8	1	32-5	1	34-2	1	35-11	1	37-8	1	39-5	1	41-3	1	43-0	1	44-8	1	46-2																	14.84	1082
60	1	27-8	1	29-5	1	31-2	1	32-10	1	34-7	1	36-4	1	38-0	1	39-9	1	41-6	1	43-3	1	45-0	1	46-8	1	48-5	1	50-2	1	51-1													17.97	1351
66	1	29-6	1	31-3	1	32-11	1	34-8	1	36-4	1	38-1	1	39-8	1	41-5	1	43-2	1	44-0	1	45-9	1	47-6	1	49-2	1	50-11	1	52-8	1	54-5	1	56-2	1	57-11	1	59-7	1	61-11			23.77	1722
72	1	31-5	1	33-2	1	34-11	1	36-8	1	38-5	1	40-1	1	41-10	1	43-7	1	45-4	1	47-

STATE	PROJECT NO.
MISS.	

DIMENSIONS AND REINFORCING FOR FLARED HEADWALL FOR SINGLE LINE PIPE CULVERT

EQUAL PIPE SIZE	DIMENSIONS G	X	Y	A NO	A LGTH	B NO	B LGTH	C NO	C LGTH	D NO	D LGTH	J1 NO	J1 LGTH	J2 NO	J2 LGTH	J3 NO	J3 LGTH	J4 NO	J4 LGTH	J5 NO	J5 LGTH	J6 NO	J6 LGTH	J7 NO	J7 LGTH	J8 NO	J8 LGTH	U NO	U LGTH	W1 NO	W1 LGTH	W2 NO	W2 LGTH	W3 NO	W3 LGTH	W4 NO	W4 LGTH	W5 NO	W5 LGTH	W6 NO	W6 LGTH	W7 NO	W7 LGTH	W8 NO	W8 LGTH	W9 NO	W9 LGTH	Y1 NO	Y1 LGTH	Y2 NO	Y2 LGTH	Y3 NO	Y3 LGTH	Y4 NO	Y4 LGTH	Y5 NO	Y5 LGTH	Y6 NO	Y6 LGTH	PAY QUANTITIES FOR ONE HEADWALL CONCRETE (CU. YDS.)	STEEL (LBS.)
18	3-10½	5-9⅝	2-11	4	7-3	5	4-1	2	2-6	2	2-3	1	4-1	1	5-3	1	6-1											4	2-5	2	2-5	2	2-5	2	1-8													2	2-2	2	3-2									0.62	72.0
24	4-7⅞	7-2⅝	3-7¼	4	8-6	6	4-8	2	3-0	2	2-6	1	4-10	1	6-0	1	7-2											4	3-1	2	3-4	2	3-4	2	1-8	2	1-8											2	2-2	2	3-9									0.86	90.0
30	5-2¼	8-5⅝	4-2¾	4	9-6	6	5-3	2	3-6	2	2-9	1	5-5	1	6-7	1	7-9	1	8-9									4	3-9	2	4-1	2	4-1	2	2-7	2	2-7	2	1-11											2	2-2	2	4-6	2	4-6							1.11	119.0
36	5-11½	9-10⅞	5-0	4	10-8½	7	5-10	2	3-11	2	3-0	1	6-2	1	7-4	1	8-6	1	9-8	1	10-2							4	4-5	2	4-10	2	4-10	2	3-4	2	3-4	2	2-3											2	2-2	2	4-6	2	5-2							1.41	146.0
42	6-7⅝	11-2	5-8⅛	4	11-10	8	6-4	2	4-4	2	3-5	1	6-10	1	8-0	1	9-2	1	10-4	1	11-6							4	5-0	2	5-8	2	5-8	2	4-1	2	4-1	2	2-7	2	2-7									2	2-2	2	4-6	2	5-9							1.71	169.0
48	7-4	12-7½	6-4½	4	13-0	9	7-0	2	4-10	2	3-10	1	7-6	1	8-8	1	9-10	1	11-0	1	12-2	1	12-11					4	5-9	2	6-5	2	6-5	2	4-11	2	4-11	2	3-4	2	3-4	2	2-10							2	2-2	2	4-6	2	6-6	2	6-6					2.10	215.0
54	7-11½	13-10	7-0	4	14-0½	9	7-6	2	5-3	2	4-3	1	8-2	1	9-4	1	10-6	1	11-8	1	12-10	1	14-0					4	6-4	2	7-2	2	7-2	2	5-8	2	5-8	2	4-1	2	4-1	2	3-2							2	2-2	2	4-6	2	6-11	2	7-1					2.45	234.0
60	8-8½	15-4¼	7-9	4	15-3½	10	8-2	2	5-7	2	4-8	1	8-11	1	10-1	1	11-3	1	12-5	1	13-7	1	14-9	1	15-7			4	7-1	2	8-1	2	8-1	2	6-7	2	6-7	2	4-11	2	4-11	2	3-5	2	3-5					2	2-2	2	4-6	2	6-11	2	7-10	2	7-10			2.93	286.0
72	10-1½	18-0¼	9-2	4	17-7½	11	9-3	2	6-8	2	5-3	1	10-4	1	11-6	1	12-8	1	13-10	1	15-0	1	16-2	1	17-4	1	18-4	4	8-4	2	9-9	2	9-9	2	8-3	2	8-3	2	6-7	2	6-7	2	5-1	2	5-1	2	4-1	2	2-2	2	4-6	2	6-11	2	9-1	2	9-1	2	9-1	3.86	370.0

DIMENSIONS AND REINFORCING FOR FLARED HEADWALL FOR DOUBLE LINE PIPE CULVERT

EQUAL PIPE SIZE	DIMENSIONS G	X	Y	Z	A NO	A LGTH	B NO	B LGTH	C NO	C LGTH	D NO	D LGTH	J1 NO	J1 LGTH	J2 NO	J2 LGTH	J3 NO	J3 LGTH	J4 NO	J4 LGTH	J5 NO	J5 LGTH	J6 NO	J6 LGTH	J7 NO	J7 LGTH	J8 NO	J8 LGTH	U NO	U LGTH	W1 NO	W1 LGTH	W2 NO	W2 LGTH	W3 NO	W3 LGTH	W4 NO	W4 LGTH	W5 NO	W5 LGTH	W6 NO	W6 LGTH	W7 NO	W7 LGTH	W8 NO	W8 LGTH	W9 NO	W9 LGTH	Y1 NO	Y1 LGTH	Y2 NO	Y2 LGTH	Y3 NO	Y3 LGTH	Y4 NO	Y4 LGTH	Y5 NO	Y5 LGTH	Y6 NO	Y6 LGTH	PAY QUANTITIES FOR ONE HEADWALL CONCRETE (CU. YDS.)	STEEL (LBS.)
18	7-1½	9-0⅝	6-2	12	4	10-6	9	4-1	3	2-6	4	2-3	1	7-4	1	8-6	1	9-4											4	2-5	2	2-5	2	2-5	2	1-8													2	2-2	2	3-2									0.94	103.0
24	8-7¼	11-2½	7-7¾	12	4	12-6	10	4-8	3	3-0	4	2-6	1	8-10	1	10-0	1	11-2											4	3-1	2	3-4	2	3-4	2	1-8	2	1-8											2	2-2	2	3-9									1.30	127.0
30	9-9	13-0⅜	8-9½	12	4	14-1	11	5-3	3	3-6	4	2-9	1	10-0	1	11-2	1	12-4	1	13-4									4	3-9	2	4-1	2	4-1	2	2-7	2	2-7	2	1-11											2	2-2	2	4-6	2	4-6							1.66	167.0
36	11-6½	15-5⅞	10-7	15	4	16-3½	13	5-10	4	3-11	4	3-0	1	11-9	1	12-11	1	14-1	1	15-3	1	15-9							4	4-5	2	4-10	2	4-10	2	3-4	2	3-4	2	2-3											2	2-2	2	4-6	2	5-2							2.14	212.0
42	12-10¾	17-5⅞	11-11¼	15	4	18-1½	14	6-4	4	4-4	4	3-5	1	13-1	1	14-3	1	15-5	1	16-7	1	17-9							4	5-0	2	5-8	2	5-8	2	4-1	2	4-1	2	2-7	2	2-7									2	2-2	2	4-6	2	5-9							2.60	243.0
48	14-6½	19-10	13-7	18	4	20-2½	15	7-0	4	4-10	4	3-10	1	14-8	1	15-10	1	17-0	1	18-2	1	19-4	1	20-1					4	5-9	2	6-5	2	6-5	2	4-11	2	4-11	2	3-4	2	3-4	2	2-10							2	2-2	2	4-6	2	6-6	2	6-6					3.21	302.0
54	16-0½	21-11	15-1	21	4	22-1½	17	7-6	4	5-3	4	4-3	1	16-3	1	17-5	1	18-7	1	19-9	1	20-11	1	22-1					4	6-4	2	7-2	2	7-2	2	5-8	2	5-8	2	4-1	2	4-1	2	3-2							2	2-2	2	4-6	2	6-11	2	7-1					3.78	340.0
60	17-9½	24-5¼	16-10	24	4	24-4½	19	8-2	4	5-7	4	4-8	1	18-0	1	19-2	1	20-4	1	21-6	1	22-8	1	23-10	1	24-8			4	7-1	2	8-1	2	8-1	2	6-7	2	6-7	2	4-11	2	4-11	2	3-5	2	3-5					2	2-2	2	4-6	2	6-11	2	7-10	2	7-10			4.55	416.0
72	20-10½	28-9¼	19-11	27	4	28-4½	22	9-3	5	6-8	4	5-3	1	21-1	1	22-3	1	23-5	1	24-7	1	25-9	1	26-11	1	28-1	1	29-1	4	8-4	2	9-9	2	9-9	2	8-3	2	8-3	2	6-7	2	6-7	2	5-1	2	5-1	2	4-1	2	2-2	2	4-6	2	6-11	2	9-1	2	9-1	2	9-1	6.01	544.0

DIMENSIONS AND REINFORCING FOR FLARED HEADWALL FOR TRIPLE LINE PIPE CULVERT

EQUAL PIPE SIZE	DIMENSIONS G	X	Y	Z	A NO	A LGTH	B NO	B LGTH	C NO	C LGTH	D NO	D LGTH	J1 NO	J1 LGTH	J2 NO	J2 LGTH	J3 NO	J3 LGTH	J4 NO	J4 LGTH	J5 NO	J5 LGTH	J6 NO	J6 LGTH	J7 NO	J7 LGTH	J8 NO	J8 LGTH	U NO	U LGTH	W1 NO	W1 LGTH	W2 NO	W2 LGTH	W3 NO	W3 LGTH	W4 NO	W4 LGTH	W5 NO	W5 LGTH	W6 NO	W6 LGTH	W7 NO	W7 LGTH	W8 NO	W8 LGTH	W9 NO	W9 LGTH	Y1 NO	Y1 LGTH	Y2 NO	Y2 LGTH	Y3 NO	Y3 LGTH	Y4 NO	Y4 LGTH	Y5 NO	Y5 LGTH	Y6 NO	Y6 LGTH	PAY QUANTITIES FOR ONE HEADWALL CONCRETE (CU. YDS.)	STEEL (LBS.)
18	10-4½	12-3⅝	9-5	12	4	13-9	12	4-1	4	2-6	6	2-3	1	10-7	1	11-9	1	12-7											4	2-5	2	2-5	2	2-5	2	1-8													2	2-2	2	3-2									1.26	131.0
24	12-7⅛	15-2⅞	11-7⅝	12	4	16-5½	14	4-8	4	3-0	6	2-6	1	12-10	1	14-0	1	15-2											4	3-1	2	3-4	2	3-4	2	1-8	2	1-8											2	2-2	2	3-9									1.73	163.0
30	14-3¾	17-7⅛	13-4¼	12	4	18-8	15	5-3	4	3-6	6	2-9	1	14-7	1	15-9	1	16-11	1	17-11									4	3-9	2	4-1	2	4-1	2	2-7	2	2-7	2	1-11											2	2-2	2	4-6	2	4-6							2.21	212.0
36	17-1½	21-0⅞	16-2	15	4	21-10½	18	5-10	6	3-11	6	3-0	1	17-4	1	18-6	1	19-8	1	20-10	1	21-4							4	4-5	2	4-10	2	4-10	2	3-4	2	3-4	2	2-3											2	2-2	2	4-6	2	5-2							2.88	274.0
42	19-1⅛	23-8¼	18-2⅝	15	4	24-4½	20	6-4	6	4-4	6	3-5	1	19-4	1	20-6	1	21-8	1	22-10	1	24-0							4	5-0	2	5-8	2	5-8	2	4-1	2	4-1	2	2-7	2	2-7									2	2-2	2	4-6	2	5-9							3.48	316.0
48	21-9	27-0½	20-9½	18	4	27-5	23	7-0	6	4-10	6	3-10	1	21-11	1	23-1	1	24-3	1	25-5	1	26-7	1	27-4					4	5-9	2	6-5	2	6-5	2	4-11	2	4-11	2	3-4	2	3-4	2	2-10							2	2-2	2	4-6	2	6-6	2	6-6					4.33	399.0
54	24-1½	30-0	23-2	21	4	30-2½	25	7-6	6	5-3	6	4-3	1	24-4	1	25-6	1	26-8	1	27-10	1	29-0	1	31-2					4	6-4	2	7-2	2	7-2	2	5-8	2	5-8	2	4-1	2	4-1	2	3-2							2	2-2	2	4-6	2	6-11	2	7-1					5.12	448.0
60	26-10½	33-6¼	25-11	24	4	33-5½	28	8-2	6	5-7	6	4-8	1	27-1	1	28-3	1	29-5	1	31-7	1	32-9	1	33-11	1	34-9			4	7-1	2	8-1	2	8-1	2	6-7	2	6-7	2	4-11	2	4-11	2	3-5	2	3-5					2	2-2	2	4-6	2	6-11	2	7-10	2	7-10			6.17	548.0
72	31-7½	39-6¼	30-8	27	4	39-1½	33	9-3	8	6-8	6	5-3	1	32-10	1	34-0	1	35-2	1	36-4	1	37-6	1	38-8	1	39-10	1	40-11	4	8-4	2	9-9	2	9-9	2	8-3	2	8-3	2	6-7	2	6-7	2	5-1	2	5-1	2	4-1	2	2-2	2	4-6	2	6-11	2	9-1	2	9-1	2	9-1	8.16	724.0

DIMENSIONS AND REINFORCING COMMON TO FLARED HEADWALLS FOR SINGLE, DOUBLE AND TRIPLE LINE PIPE CULVERTS

EQUAL PIPE SIZE	DIMENSIONS MIN THICK "T"	INSIDE SPAN	INSIDE RISE	C	H	R	S1	S2	U	W	W1 X	W1 X1	W2 X	W2 X1	W3 X	W3 X1	W4 X	W4 X1	W5 X	W5 X1	W6 X	W6 X1	W7 X	W7 X1	W8 X	W8 X1	W9 X	W9 X1
											DETAIL DIMENSIONS FOR COMMON WING WALL REINFORCING STEEL																	
18	2½	22	13½	7	2-4½	2-6	2-7¾	2-10⅝	5	0-8	1-1	1-4	1-1	1-4	0-10	0-10												
24	3	28½	18	7	2-10½	3-1	3-3⅞	3-6¾	5	0-10	1-6	1-10	1-6	1-10	0-10	0-10	0-10	0-10										
30	3½	36¼	22½	7	3-4	3-8	4-0	4-2⅞	5	1-0	1-10	2-3	1-10	2-3	1-2	1-5	1-2	1-5	0-10	1-1								
36	4	43¾	26⅝	7	3-9	4-3	4-8	4-10⅞	5	1-2	2-2	2-8	2-2	2-8	1-6	1-10	1-6	1-10	1-0	1-3								
42	4½	51⅛	31⅞	7	4-2½	4-9	5-3	5-5⅞	5	1-4	2-6	3-2	2-6	3-2	1-10	2-3	1-10	2-3	1-2	1-5	1-2	1-5						
48	5	58½	36	7	4-8	5-5	6-0⅞	6-3	5	1-6	2-10	3-7	2-10	3-7	2-2	2-9	2-2	2-9	1-6	1-10	1-6	1-10	1-3	1-7				
54	5½	65	40	7	5-1	5-11	6-7⅞	6-10	5	1-8	3-2	4-0	3-2	4-0	2-6	3-2	2-6	3-2	1-10	2-3	1-10	2-3	1-5	1-9				
60	6	73	45	7	5-7	6-7	7-4⅞	7-7¼	5	1-10	3-7	4-6	3-7	4-6	2-11	3-8	2-11	3-8	2-2	2-9	2-2	2-9	1-6	1-11	1-6	1-11		
72	7	88	54	7	6-6	7-8	8-7⅞	8-10¼	5	2-2	4-4	5-5	4-4	5-5	3-8	4-7	3-8	4-7	2-11	3-8	2-11	3-8	2-3	2-10	2-3	2-10	1-10	2-3

GENERAL NOTES:

1. SPECIFICATIONS: MISSISSIPPI DEPARTMENT OF TRANSPORTATION, LATEST EDITION.
2. ALL CONCRETE SHALL BE CLASS "B".
3. ALL EXPOSED EDGES SHALL BE CHAMFERED ¾".
4. EXPOSED CONCRETE SURFACES SHALL BE FINISHED IN ACCORDANCE WITH THE APPLICABLE SECTION OF THE MDOT SPECIFICATIONS.
5. ALL LENGTHS AND QUANTITIES IN THE TABLES HEREON ARE BASED ON CONCRETE TONGUE & GROOVE PIPE.
6. DIMENSIONS SHOWN FOR BAR SPACING ARE TO ℄ BARS.
7. ARCH PIPE SHALL CONFORM TO REQUIREMENTS OF AASHTO M 206 FOR CLASS OF PIPE SHOWN ON PLANS.
8. QUANTITIES SHOWN SHALL BE THE BASIS FOR FINAL PAYMENT UNLESS AUTHORIZED MODIFICATIONS ARE MADE.

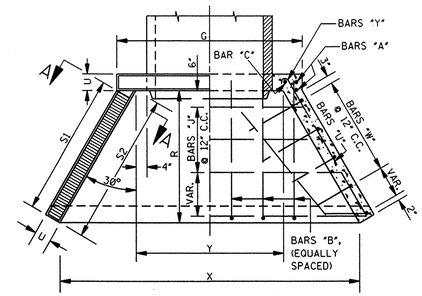

PLAN

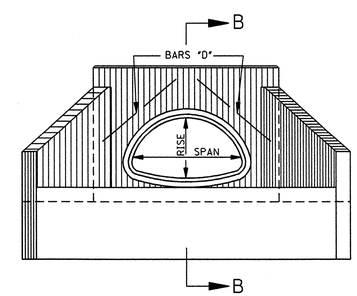

FRONT ELEVATION

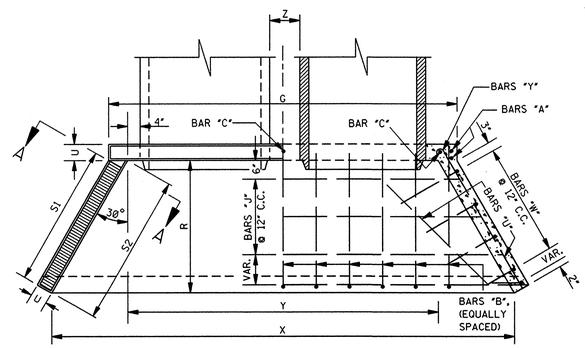

PLAN

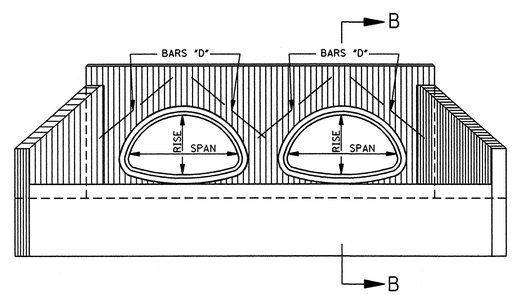

FRONT ELEVATION

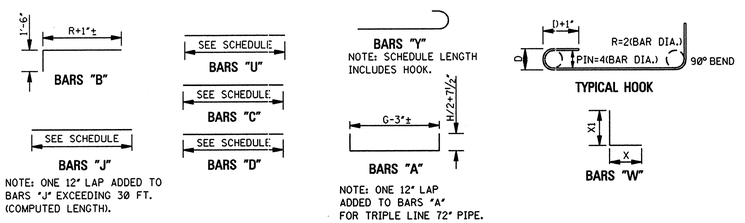

BAR BENDING DETAILS

NOTE: ALL BARS ARE #4.

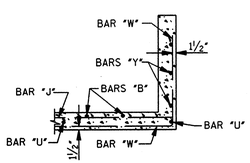

SECTION A–A

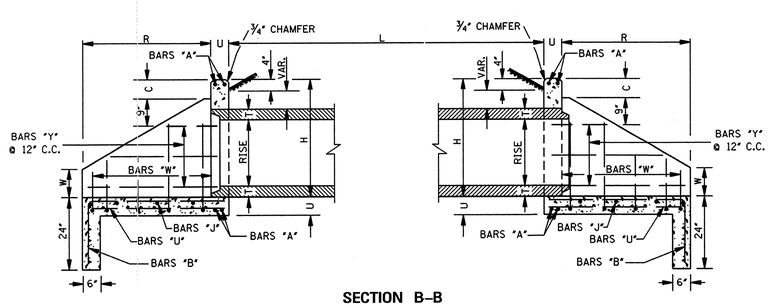

SECTION B–B

DATE	REVISION	BY	MISSISSIPPI DEPARTMENT OF TRANSPORTATION ROADWAY DESIGN DIVISION STANDARD PLAN
			HEADWALLS FOR CONCRETE ARCH PIPE, 2:1 SLOPE, 0°-15° SKEW
ISSUE DATE: OCTOBER 1, 1998			WORKING NUMBER HWA-2100 SHEET NUMBER 349

STATE	PROJECT NO.
MISS.	

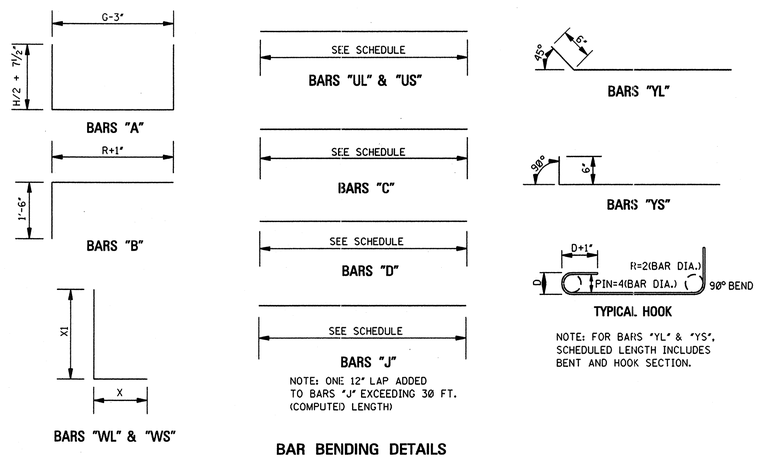

BAR BENDING DETAILS

NOTE: ALL BARS ARE #4. IN BAR DESIGNATIONS (e.g. "YS" & "YL"), S DENOTES SHORT WING AND L DENOTES LONG WING.

FLARED HEADWALL FOR SINGLE AND DOUBLE LINE PIPE CULVERTS — REINFORCING STEEL REQUIRED FOR ONE HEADWALL ON SINGLE OR DOUBLE LINE PIPE CULVERTS																																																	
EQUAL PIPE SIZE	UL		US		YL1		YL2		YL3		YL4		YL5		YL6		YS1		YS2		YS3		YS4		YS5		YS6		WL1		WL2		WL3		WL4		WL5		WL6		WS1		WS2		WS3		WS4	
	NO	LGTH	NO	LGTH	NO	LGTH	NO	LGTH	NO	LGTH	NO	LGTH	NO	LGTH	NO	LGTH	NO	LGTH	NO	LGTH	NO	LGTH	NO	LGTH	NO	LGTH	NO	LGTH	NO	LGTH	NO	LGTH	NO	LGTH	NO	LGTH	NO	LGTH	NO	LGTH	NO	LGTH	NO	LGTH	NO	LGTH	NO	LGTH
18	2	3-5	2	2-8	1	2-7	1	3-11									1	2-1	1	3-2									2	2-7	2	1-6									2	2-4	1	1-6						
24	2	4-3	2	3-3	1	2-6	1	4-8									1	2-1	1	3-9									2	3-8	2	2-2	1	1-9							2	3-4	2	1-9						
30	2	5-0	2	3-10	1	2-7	1	5-5	1	5-6							1	2-1	1	4-3	1	4-4							2	4-3	2	3-0	2	2-0							2	3-11	2	2-0						
36	2	5-10	2	4-5	1	2-8	1	5-6	1	6-4							1	2-1	1	4-3	1	4-11							2	4-11	2	3-9	2	2-4							2	4-8	2	2-10	1	2-4				
42	2	6-7	2	4-11	1	2-8	1	5-5	1	7-1							1	2-1	1	4-2	1	5-5							2	5-10	2	4-8	2	3-2	1	2-7					2	5-6	2	3-9	2	2-7				
48	2	7-6	2	5-7	1	2-8	1	5-6	1	8-0	1	8-0					1	2-1	1	4-2	1	6-1	1	6-1					2	6-6	2	5-5	2	4-1	2	2-10					2	6-2	2	4-6	2	2-10				
54	2	8-3	2	6-1	1	2-8	1	5-5	1	8-3	1	8-9					1	2-0	1	4-2	1	6-3	1	6-7					2	7-5	2	6-2	2	4-11	2	3-9	1	3-2			2	7-2	2	5-5	2	3-8	1	3-2		
60	2	9-2	2	6-9	1	2-7	1	5-4	1	8-2	1	9-8	1	9-8			1	2-0	1	4-1	1	6-2	1	7-3	1	7-3			2	8-4	2	7-2	2	5-10	2	4-8	2	3-6			2	8-0	2	6-2	2	4-6	2	2-10		
72	2	10-8	2	7-10	1	2-8	1	5-4	1	8-2	1	10-11	1	11-2	1	11-2	1	2-0	1	4-0	1	6-1	1	8-1	1	8-4	1	8-4	2	9-10	2	8-8	2	7-5	2	6-2	2	4-10	1	4-1	2	9-7	2	7-10	2	6-1	2	4-1	

TABLE OF ADDED LENGTHS FOR 30° SKEWED PIPE	
EQUAL PIPE SIZE	ADDED LENGTH (FT.) EACH END
18	.66
24	.84
30	1.03
36	1.26
42	1.45
48	1.65
54	1.84
60	2.05
72	2.43

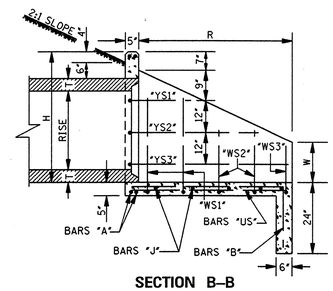

SECTION B–B

FLARED HEADWALL FOR SINGLE LINE PIPE CULVERT — ADDITIONAL STEEL REQUIRED FOR ONE HEADWALL																													PAY QUANTITIES FOR ONE HEADWALL	
EQUAL PIPE SIZE	DIMENSIONS			A		B		C		D		J1		J2		J3		J4		J5		J6		J7		J8				
	G	X	Y	NO	LGTH	NO	LGTH	NO	LGTH	NO	LGTH	NO	LGTH	NO	LGTH	NO	LGTH	NO	LGTH	NO	LGTH	NO	LGTH	NO	LGTH	NO	LGTH		CONCRETE (CU. YDS.)	STEEL (LBS.)
18	4-3½	5-9½	3-3½	4	7-8	3	4-1	2	2-6	2	2-3	1	4-5	1	5-5	1	6-2												0.65	71
24	5-0¼	7-1¼	4-0¼	4	9-0	4	4-8	2	3-1	2	2-6	1	5-2	1	6-2	1	7-2	1	7-6										0.89	96
30	5-9½	8-5½	4-9½	4	10-1	5	5-3	2	3-5	2	2-9	1	6-0	1	7-0	1	8-0	1	8-10										1.15	121
36	6-8¼	9-11	5-8	4	11-5	6	5-10	2	3-11	2	3-0	1	6-11	1	7-11	1	8-11	1	9-11	1	10-4								1.47	150
42	7-5½	11-2½	6-5½	4	12-8	7	6-4	2	4-4	2	3-5	1	7-8	1	8-8	1	9-8	1	10-8	1	11-7								1.79	175
48	8-3¼	12-8¼	7-3¼	4	13-11	8	7-0	2	4-10	2	3-10	1	8-5	1	9-5	1	10-5	1	11-5	1	12-5	1	13-1						2.21	219
54	9-0½	13-11¼	8-0¼	4	15-2	8	7-6	2	5-3	2	4-3	1	9-2	1	10-2	1	11-2	1	12-2	1	13-2	1	14-4						2.59	244
60	9-10½	15-5½	8-10½	4	16-6	9	8-2	2	5-9	2	4-8	1	10-1	1	11-1	1	12-1	1	13-1	1	14-1	1	15-1	1	15-10				3.09	298
72	11-5½	18-1½	10-5½	4	19-0	11	9-3	2	6-8	2	5-3	1	11-8	1	12-8	1	13-8	1	14-8	1	15-8	1	16-8	1	17-8	1	18-6		4.06	387

FLARED HEADWALL FOR DOUBLE LINE PIPE CULVERT — ADDITIONAL STEEL REQUIRED FOR ONE HEADWALL																														PAY QUANTITIES FOR ONE HEADWALL	
EQUAL PIPE SIZE	DIMENSIONS				A		B		C		D		J1		J2		J3		J4		J5		J6		J7		J8				
	G	X	Y	Z	NO	LGTH	NO	LGTH	NO	LGTH	NO	LGTH	NO	LGTH	NO	LGTH	NO	LGTH	NO	LGTH	NO	LGTH	NO	LGTH	NO	LGTH	NO	LGTH		CONCRETE (CU. YDS.)	STEEL (LBS.)
18	8-0¾	9-6¾	7-0¾	1-0	4	11-5	7	4-1	3	2-6	4	2-3	1	8-2	1	9-2	1	9-11												1.01	105
24	9-6½	11-7½	8-6½	1-0	4	13-6	9	4-8	3	3-1	4	2-6	1	9-8	1	10-8	1	11-8	1	12-0										1.39	140
30	11-1	13-8¾	10-0¾	1-0	4	15-4	10	5-3	3	3-5	4	2-9	1	11-4	1	12-4	1	13-4	1	14-1										1.79	173
36	13-1¾	16-4¾	12-1¾	1-3	4	17-10	12	5-10	4	3-11	4	3-0	1	13-5	1	14-5	1	15-5	1	16-5	1	16-9								2.32	221
42	14-4¼	18-5	13-8	1-3	4	19-10	14	6-4	4	4-4	4	3-5	1	14-11	1	15-11	1	16-11	1	17-11	1	18-10								2.81	259
48	16-7¼	21-0¼	15-7¼	1-6	4	22-3	16	7-0	4	4-10	4	3-10	1	16-9	1	17-9	1	18-9	1	19-9	1	20-9	1	21-5						3.49	323
54	18-5	23-4	17-5	1-9	4	24-6	18	7-6	4	5-3	4	4-3	1	18-7	1	19-7	1	20-7	1	21-7	1	22-7	1	23-9						4.14	370
60	20-4¾	25-11½	19-4½	2-0	4	27-0	20	8-2	4	5-9	4	4-8	1	20-7	1	21-7	1	22-7	1	23-7	1	24-7	1	25-7	1	26-4				4.97	449
72	23-10¼	30-6	22-10	2-3	4	31-4	23	9-3	5	6-8	4	5-3	1	24-1	1	25-1	1	26-1	1	27-1	1	28-1	1	29-1	1	30-1	1	30-11		6.54	584

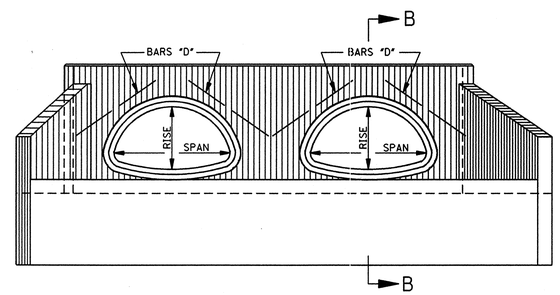

FRONT ELEVATION

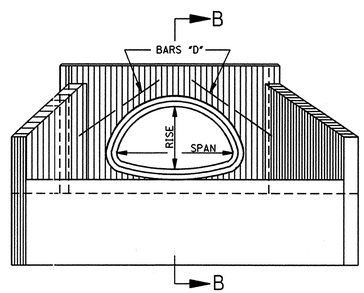

FRONT ELEVATION

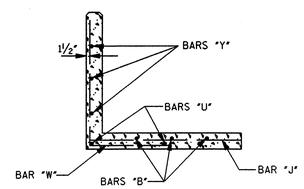

SECTION A–A

EQUAL PIPE SIZE	DIMENSIONS								DETAIL DIMENSIONS FOR WING WALL STEEL																			
	MIN THICK "T"	INSIDE SPAN	INSIDE RISE	H	R	S1	S2	W	WL1		WL2		WL3		WL4		WL5		WL6		WS1		WS2		WS3		WS4	
									X1	X	X1	X	X1	X	X1	X	X1	X	X1	X	X1	X	X1	X	X1	X	X1	X
18	2½	22	13½	2-4¼	2-6	3-1½	3-6½	0-8	1-6	1-1	0-10	0-8									1-4	1-0	0-10	0-8				
24	3	28½	18	2-11⅞	3-1	3-11¼	4-4¼	0-10	2-1	1-7	1-3	0-11	1-0	0-9							1-11	1-5	1-0	0-9				
30	3½	36¼	22½	3-3½	3-8	4-9¼	5-2¼	1-0	2-5	1-10	1-9	1-3	1-2	0-10							2-3	1-8	1-2	0-10				
36	4	43¾	26⅞	3-8⅝	4-3	5-7	6-0	1-2	2-10	2-1	2-2	1-7	1-4	1-0							2-8	2-0	1-8	1-2	1-4	1-0		
42	4½	51⅛	31⅞	4-2⅞	4-9	6-3½	6-8½	1-4	3-4	2-6	2-8	2-0	1-10	1-4	1-6	1-1					3-2	2-4	2-2	1-7	1-6	1-1		
48	5	58½	36	4-8	5-5	7-3	7-8	1-6	3-9	2-9	3-1	2-4	2-4	1-9	1-8	1-2					3-7	2-7	2-7	1-11	1-8	1-2		
54	5½	65	40	5-1¼	5-11	7-11½	8-4½	1-8	4-3	3-2	3-7	2-7	2-10	2-1	2-2	1-7	1-10	1-4			4-1	3-1	3-1	2-4	2-1	1-7	1-10	1-4
60	6	73	45	5-7¼	6-7	8-10¾	9-3¾	1-10	4-9	3-7	4-1	3-1	3-4	2-6	2-8	2-0	2-0	1-6			4-7	3-5	3-7	2-7	2-7	1-11	2-0	1-6
72	7	88	54	6-6¼	7-8	10-5	10-10	2-2	5-8	4-2	5-0	3-8	4-3	3-2	3-7	2-7	2-9	2-1	2-4	1-9	5-6	4-1	4-6	3-4	3-6	2-7	2-4	1-9

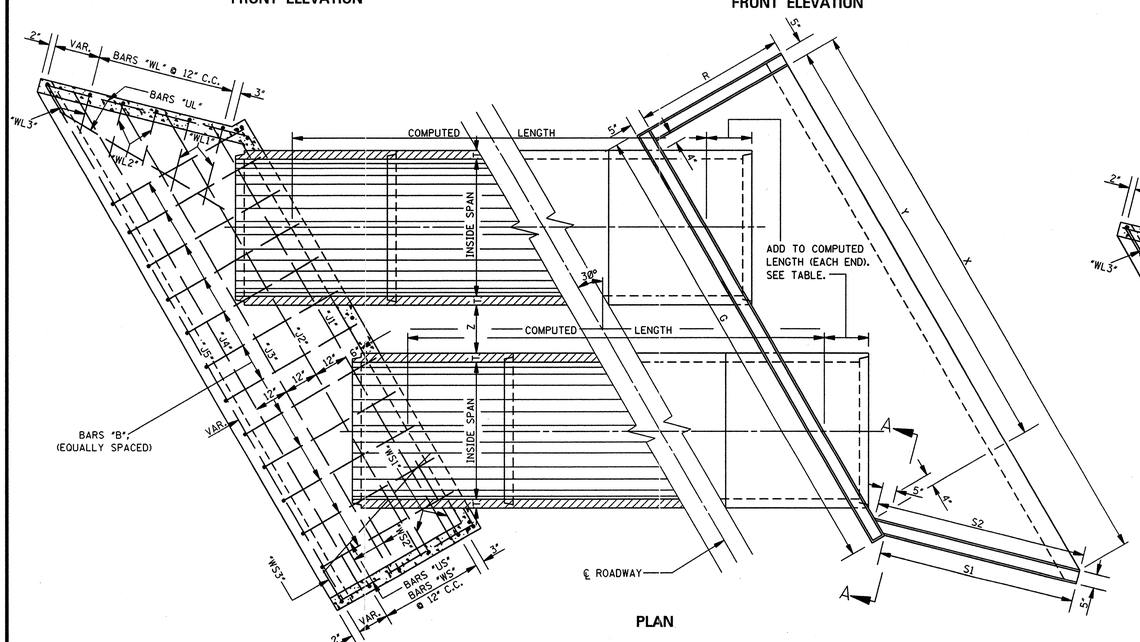

PLAN

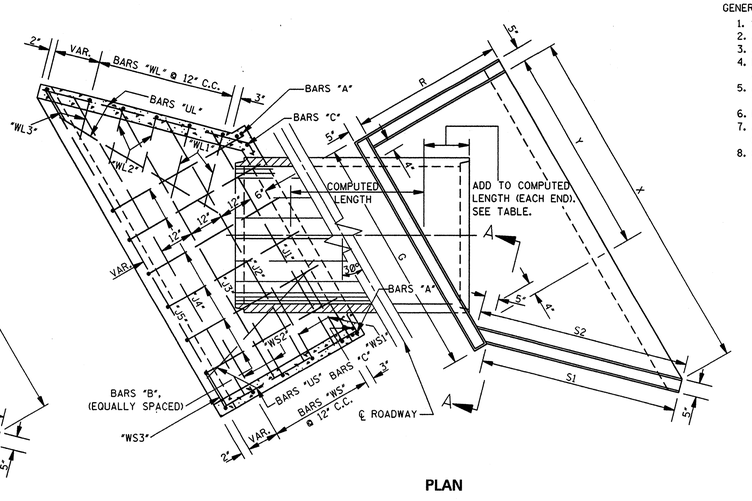

PLAN

GENERAL NOTES:

1. SPECIFICATIONS: MISSISSIPPI DEPARTMENT OF TRANSPORTATION, LATEST EDITION.
2. ALL CONCRETE SHALL BE CLASS "B".
3. ALL EXPOSED EDGES SHALL BE CHAMFERED ¾".
4. EXPOSED CONCRETE SURFACES SHALL BE FINISHED IN ACCORDANCE WITH THE APPLICABLE SECTION OF THE MDOT SPECIFICATIONS.
5. ALL LENGTHS AND QUANTITIES IN THE TABLES HEREON ARE BASED ON CONCRETE TONGUE & GROOVE PIPE.
6. DIMENSIONS SHOWN FOR BAR SPACING ARE TO ℄ BARS.
7. ARCH PIPE SHALL CONFORM TO REQUIREMENTS OF AASHTO M 206 FOR CLASS OF PIPE SHOWN ON PLANS.
8. QUANTITIES SHOWN SHALL BE THE BASIS FOR FINAL PAYMENT UNLESS AUTHORIZED MODIFICATIONS ARE MADE.

BY	MISSISSIPPI DEPARTMENT OF TRANSPORTATION ROADWAY DESIGN DIVISION STANDARD PLAN	
REVISION	**HEADWALLS FOR CONCRETE ARCH PIPE, 2:1 SLOPE, 30° SKEW**	ENGLISH WORKING NUMBER HWA-2130
DATE	ISSUE DATE: OCTOBER 1, 1998	SHEET NUMBER 350

STATE	PROJECT NO.
MISS.	

DIMENSIONS AND REINFORCING FOR FLARED HEADWALL FOR SINGLE LINE PIPE CULVERT

EQUAL PIPE SIZE	DIMENSIONS G	DIMENSIONS X	DIMENSIONS Y	A NO	A LGTH	B NO	B LGTH	C NO	C LGTH	D NO	D LGTH	J1 NO	J1 LGTH	J2 NO	J2 LGTH	J3 NO	J3 LGTH	J4 NO	J4 LGTH	J5 NO	J5 LGTH	J6 NO	J6 LGTH	J7 NO	J7 LGTH	J8 NO	J8 LGTH	J9 NO	J9 LGTH	J10 NO	J10 LGTH	J11 NO	J11 LGTH	J12 NO	J12 LGTH	J13 NO	J13 LGTH	J14 NO	J14 LGTH	J15 NO	J15 LGTH	PAY QUANTITIES FOR ONE HEADWALL CONCRETE (CU. YDS.)	PAY QUANTITIES FOR ONE HEADWALL STEEL (LBS.)
18	3-9¾	6-3⅛	2-11¼	4	7-2	5	6-1	2	2-6	2	2-3	1	3-10	1	4-7	1	5-4	1	6-0	1	6-9																					0.90	104
24	4-5⅜	8-1⅝	3-6⅞	4	8-4	6	7-10	2	3-1	2	2-6	1	4-6	1	5-3	1	6-0	1	6-8	1	7-5	1	8-2																			1.40	146
30	5-1⅞	9-3⅞	4-2⅞	4	9-4	6	8-6	2	3-5	2	2-9	1	5-2	1	5-11	1	6-8	1	7-4	1	8-1	1	8-10	1	9-7																	1.73	182
36	5-10⅝	10-10¼	5-0⅛	4	10-6	7	9-7	2	3-10	2	3-0	1	5-11	1	6-8	1	7-5	1	8-1	1	8-10	1	9-7	1	10-4	1	11-0															2.22	223
42	6-6⅝	12-4⅜	5-8¼	4	11-8	8	10-9	2	4-4	2	3-5	1	6-7	1	7-4	1	8-1	1	8-9	1	9-6	1	10-3	1	11-0	1	11-8	1	12-5													2.79	271
48	7-3¼	14-0⅛	6-4⅝	4	12-11	8	12-1	2	4-10	2	3-10	1	7-4	1	8-1	1	8-10	1	9-6	1	10-3	1	11-0	1	11-9	1	12-5	1	13-2	1	13-11											3.49	331
54	7-11	15-5½	7-0½	4	14-0	9	13-2	2	5-3	2	4-3	1	7-11	1	8-8	1	9-5	1	10-1	1	10-10	1	11-7	1	12-4	1	13-0	1	13-9	1	14-6	1	15-3	1	16-0							4.16	401
60	8-7¾	17-1⅞	7-9¼	4	15-3	10	14-6	2	5-9	2	4-8	1	8-8	1	9-5	1	10-2	1	10-10	1	11-7	1	12-4	1	13-1	1	13-9	1	14-6	1	15-3	1	16-0	1	16-8	1	17-5					5.03	486
72	10-0¼	20-2¾	9-1¾	4	17-6	11	16-10	2	6-8	2	5-3	1	10-1	1	10-10	1	11-7	1	12-3	1	13-0	1	13-9	1	14-6	1	15-2	1	15-11	1	16-8	1	17-5	1	18-1	1	18-10	1	19-7	1	20-4	6.80	637

EQUAL PIPE SIZE	REINFORCING STEEL U NO	U LGTH	W1 NO	W1 LGTH	W2 NO	W2 LGTH	W3 NO	W3 LGTH	W4 NO	W4 LGTH	W5 NO	W5 LGTH	W6 NO	W6 LGTH	W7 NO	W7 LGTH	W8 NO	W8 LGTH	W9 NO	W9 LGTH	Y1 NO	Y1 LGTH	Y2 NO	Y2 LGTH	Y3 NO	Y3 LGTH	Y4 NO	Y4 LGTH	Y5 NO	Y5 LGTH	Y6 NO	Y6 LGTH
18	4	4-5	4	2-9	4	2-2	4	1-9													2	3-3	2	5-2								
24	4	6-3	4	3-9	4	3-0	4	2-4	4	1-10											2	3-3	2	6-11								
30	4	6-11	4	4-5	4	3-8	4	2-10	4	2-2	2	1-11									2	3-3	2	7-5	2	7-8						
36	4	8-1	4	5-1	4	4-5	4	3-7	4	2-9	4	2-4									2	3-3	2	7-5	2	8-9						
42	4	9-4	4	5-11	4	5-2	4	4-4	4	3-7	4	2-10	2	2-8							2	3-3	2	7-5	2	10-1						
48	4	10-9	4	6-9	4	5-11	4	5-2	4	4-4	4	3-7	4	2-10							2	3-3	2	7-5	2	11-5	2	11-5				
54	4	11-10	4	7-7	4	6-9	4	5-11	4	5-1	4	4-3	4	3-6	4	3-3					2	3-3	2	7-5	2	11-8	2	12-7				
60	4	13-3	4	8-6	4	7-8	4	6-10	4	6-1	4	5-3	4	4-4	4	3-7	2	3-6			2	3-3	2	7-5	2	11-8	2	14-0	2	14-0		
72	4	15-9	4	10-1	4	9-4	4	8-6	4	7-8	4	6-10	4	6-0	4	5-3	4	4-5	2	4-2	2	3-3	2	7-5	2	11-8	2	15-11	2	16-6	2	16-6

DIMENSIONS AND REINFORCING FOR FLARED HEADWALL FOR DOUBLE LINE PIPE CULVERT

EQUAL PIPE SIZE	DIMENSIONS G	DIMENSIONS X	DIMENSIONS Y	DIMENSIONS Z	A NO	A LGTH	B NO	B LGTH	C NO	C LGTH	D NO	D LGTH	J1 NO	J1 LGTH	J2 NO	J2 LGTH	J3 NO	J3 LGTH	J4 NO	J4 LGTH	J5 NO	J5 LGTH	J6 NO	J6 LGTH	J7 NO	J7 LGTH	J8 NO	J8 LGTH	J9 NO	J9 LGTH	J10 NO	J10 LGTH	J11 NO	J11 LGTH	J12 NO	J12 LGTH	J13 NO	J13 LGTH	J14 NO	J14 LGTH	J15 NO	J15 LGTH	PAY QUANTITIES FOR ONE HEADWALL CONCRETE (CU. YDS.)	PAY QUANTITIES FOR ONE HEADWALL STEEL (LBS.)
18	7-1	9-6⅜	6-2½	1-0	4	10-5	8	6-1	3	2-6	4	2-3	1	7-1	1	7-10	1	8-7	1	9-3	1	10-0																					1.26	142
24	8-4¼	12-0½	7-5¾	1-0	4	12-3	9	7-10	3	3-1	4	2-6	1	8-5	1	9-2	1	9-11	1	10-7	1	11-4	1	12-1																			2.02	193
30	9-0¼	13-10¾	8-9¾	1-0	4	13-11	11	8-6	3	3-5	4	2-9	1	9-9	1	10-6	1	11-3	1	11-11	1	12-8	1	13-5	1	14-2																	2.51	251
36	11-5¾	16-5⅝	10-7¼	1-3	4	16-2	13	9-7	4	3-10	4	3-0	1	11-6	1	12-3	1	13-0	1	13-8	1	14-5	1	15-2	1	15-11	1	16-7															3.28	316
42	12-9¾	18-7½	11-11¼	1-3	4	18-0	14	10-9	4	4-4	4	3-5	1	12-10	1	13-7	1	14-4	1	15-0	1	15-9	1	16-6	1	17-3	1	17-11	1	18-8													4.10	379
48	14-5¾	21-2¾	13-7¼	1-6	4	20-2	16	12-1	4	4-10	4	3-10	1	14-6	1	15-3	1	16-0	1	16-8	1	17-5	1	18-2	1	18-11	1	19-7	1	20-4	1	21-1											5.17	475
54	16-0½	23-7	15-2	1-9	4	22-2	17	13-2	4	5-3	4	4-3	1	16-1	1	16-10	1	17-7	1	18-3	1	19-0	1	19-9	1	20-6	1	21-2	1	21-11	1	22-8	1	23-5	1	24-1							6.22	570
60	17-9	26-3⅞	16-10½	2-0	4	24-4	19	14-6	4	5-9	4	4-8	1	17-9	1	18-6	1	19-3	1	19-11	1	20-8	1	21-5	1	22-2	1	22-10	1	23-7	1	24-4	1	25-1	1	25-9	1	26-6					7.55	689
72	20-9	30-11½	19-10½	2-3	4	28-3	22	16-10	5	6-8	4	5-3	1	20-9	1	21-6	1	22-3	1	22-11	1	23-8	1	24-5	1	25-2	1	25-10	1	26-7	1	27-4	1	28-1	1	28-9	1	29-6	1	30-3	1	31-0	10.20	916

EQUAL PIPE SIZE	REINFORCING STEEL U NO	U LGTH	W1 NO	W1 LGTH	W2 NO	W2 LGTH	W3 NO	W3 LGTH	W4 NO	W4 LGTH	W5 NO	W5 LGTH	W6 NO	W6 LGTH	W7 NO	W7 LGTH	W8 NO	W8 LGTH	W9 NO	W9 LGTH	Y1 NO	Y1 LGTH	Y2 NO	Y2 LGTH	Y3 NO	Y3 LGTH	Y4 NO	Y4 LGTH	Y5 NO	Y5 LGTH	Y6 NO	Y6 LGTH
18	4	4-5	4	2-9	4	2-2	4	1-9													2	3-3	2	5-2								
24	4	6-3	4	3-9	4	3-0	4	2-4	4	1-10											2	3-3	2	6-11								
30	4	6-11	4	4-5	4	3-8	4	2-10	4	2-2	2	1-11									2	3-3	2	7-5	2	7-8						
36	4	8-1	4	5-1	4	4-5	4	3-7	4	2-9	4	2-4									2	3-3	2	7-5	2	8-9						
42	4	9-4	4	5-11	4	5-2	4	4-4	4	3-7	4	2-10	2	2-8							2	3-3	2	7-5	2	10-1						
48	4	10-9	4	6-9	4	5-11	4	5-2	4	4-4	4	3-7	4	2-10							2	3-3	2	7-5	2	11-5	2	11-5				
54	4	11-10	4	7-7	4	6-9	4	5-11	4	5-1	4	4-3	4	3-6	4	3-3					2	3-3	2	7-5	2	11-8	2	12-7				
60	4	13-3	4	8-6	4	7-8	4	6-10	4	6-1	4	5-3	4	4-4	4	3-7	2	3-6			2	3-3	2	7-5	2	11-8	2	14-0	2	14-0		
72	4	15-9	4	10-1	4	9-4	4	8-6	4	7-8	4	6-10	4	6-0	4	5-3	4	4-5	2	4-2	2	3-3	2	7-5	2	11-8	2	15-11	2	16-6	2	16-6

DIMENSIONS AND REINFORCING FOR FLARED HEADWALL FOR TRIPLE LINE PIPE CULVERT

EQUAL PIPE SIZE	DIMENSIONS G	DIMENSIONS X	DIMENSIONS Y	DIMENSIONS Z	A NO	A LGTH	B NO	B LGTH	C NO	C LGTH	D NO	D LGTH	J1 NO	J1 LGTH	J2 NO	J2 LGTH	J3 NO	J3 LGTH	J4 NO	J4 LGTH	J5 NO	J5 LGTH	J6 NO	J6 LGTH	J7 NO	J7 LGTH	J8 NO	J8 LGTH	J9 NO	J9 LGTH	J10 NO	J10 LGTH	J11 NO	J11 LGTH	J12 NO	J12 LGTH	J13 NO	J13 LGTH	J14 NO	J14 LGTH	J15 NO	J15 LGTH	PAY QUANTITIES FOR ONE HEADWALL CONCRETE (CU. YDS.)	PAY QUANTITIES FOR ONE HEADWALL STEEL (LBS.)
18	10-4¼	12-9⅝	9-5¾	1-0	4	13-8	12	6-1	4	2-6	6	2-3	1	10-5	1	11-2	1	11-11	1	12-7	1	13-4																					1.63	181
24	12-3⅛	15-11⅜	11-4⅝	1-0	4	16-2	13	7-10	4	3-1	6	2-6	1	12-4	1	13-1	1	13-10	1	14-6	1	15-3	1	16-0																			2.64	246
30	14-0⅞	18-5⅝	13-4⅝	1-0	4	18-3	15	8-6	4	3-5	6	2-9	1	14-3	1	15-0	1	15-9	1	16-5	1	17-2	1	17-11	1	18-8																	3.29	313
36	17-0⅞	22-0½	16-2⅜	1-3	4	21-9	18	9-7	6	3-10	6	3-0	1	17-1	1	17-10	1	18-7	1	19-3	1	20-0	1	20-9	1	21-6	1	22-2															4.34	402
42	19-0⅞	24-10⅝	18-2⅜	1-3	4	24-3	20	10-9	6	4-4	6	3-5	1	19-1	1	19-10	1	20-7	1	21-3	1	22-0	1	22-9	1	23-6	1	24-2	1	24-11													5.41	486
48	21-8⅜	28-5⅝	20-9⅞	1-6	4	27-4	23	12-1	6	4-10	6	3-10	1	21-9	1	22-6	1	23-3	1	23-11	1	24-8	1	25-5	1	26-2	1	26-10	1	27-7	1	28-4											6.85	511
54	24-2	31-8½	23-3½	1-9	4	30-3	25	13-2	6	5-3	6	4-3	1	24-2	1	24-11	1	25-8	1	26-4	1	27-1	1	27-10	1	28-7	1	29-3	1	30-0	1	30-9	1	31-6	1	32-2							8.27	740
60	26-10¼	35-4⅜	25-11¾	2-0	4	33-5	28	14-6	6	5-9	6	4-8	1	26-11	1	27-8	1	28-5	1	29-1	1	29-10	1	30-7	1	31-4	1	32-0	1	32-9	1	33-6	1	34-3	1	34-11	1	35-8					10.07	894
72	31-5¾	41-8¼	30-7¼	2-3	4	39-0	33	16-10	8	6-8	6	5-3	1	31-6	1	32-3	1	33-0	1	33-8	1	34-5	1	35-2	1	35-11	1	36-7	1	37-4	1	38-1	1	38-10	1	39-6	1	40-3	1	41-0	1	41-9	13.60	1197

EQUAL PIPE SIZE	REINFORCING STEEL U NO	U LGTH	W1 NO	W1 LGTH	W2 NO	W2 LGTH	W3 NO	W3 LGTH	W4 NO	W4 LGTH	W5 NO	W5 LGTH	W6 NO	W6 LGTH	W7 NO	W7 LGTH	W8 NO	W8 LGTH	W9 NO	W9 LGTH	Y1 NO	Y1 LGTH	Y2 NO	Y2 LGTH	Y3 NO	Y3 LGTH	Y4 NO	Y4 LGTH	Y5 NO	Y5 LGTH	Y6 NO	Y6 LGTH
18	4	4-5	4	2-9	4	2-2	4	1-9													2	3-3	2	5-2								
24	4	6-3	4	3-9	4	3-0	4	2-4	4	1-10											2	3-3	2	6-11								
30	4	6-11	4	4-5	4	3-8	4	2-10	4	2-2	2	1-11									2	3-3	2	7-5	2	7-8						
36	4	8-1	4	5-1	4	4-5	4	3-7	4	2-9	4	2-4									2	3-3	2	7-5	2	8-9						
42	4	9-4	4	5-11	4	5-2	4	4-4	4	3-7	4	2-10	2	2-8							2	3-3	2	7-5	2	10-1						
48	4	10-9	4	6-9	4	5-11	4	5-2	4	4-4	4	3-7	4	2-10							2	3-3	2	7-5	2	11-5	2	11-5				
54	4	11-10	4	7-7	4	6-9	4	5-11	4	5-1	4	4-3	4	3-6	4	3-3					2	3-3	2	7-5	2	11-8	2	12-7				
60	4	13-3	4	8-6	4	7-8	4	6-10	4	6-1	4	5-3	4	4-4	4	3-7	2	3-6			2	3-3	2	7-5	2	11-8	2	14-0	2	14-0		
72	4	15-9	4	10-1	4	9-4	4	8-6	4	7-8	4	6-10	4	6-0	4	5-3	4	4-5	2	4-2	2	3-3	2	7-5	2	11-8	2	15-11	2	16-6	2	16-6

DIMENSIONS AND REINFORCING COMMON TO FLARED HEADWALLS FOR SINGLE, DOUBLE AND TRIPLE LINE PIPE CULVERTS

EQUAL PIPE SIZE	MIN THICK "T"	INSIDE SPAN	INSIDE RISE	H	R	S1	S2	W	W1 X	W1 X1	W2 X	W2 X1	W3 X	W3 X1	W4 X	W4 X1	W5 X	W5 X1	W6 X	W6 X1	W7 X	W7 X1	W8 X	W8 X1	W9 X	W9 X1
18	2½	22	13½	2-4¼	4-6¾	4-8⅝	4-10¼	0-8	1-1	1-8	1-0	1-2	0-10	0-11												
24	3	28½	18	2-11⅝	6-3¼	6-6⅛	6-8	0-10	1-6	2-3	1-3	1-9	1-1	1-3	0-10	1-0										
30	3½	36¼	22½	3-3½	6-11¾	7-3⅜	7-6¼	1-0	1-10	2-7	1-7	2-1	1-3	1-7	1-0	1-2	0-10	1-1								
36	4	43¾	26⅝	3-8⅝	8-0¼	8-4⅝	8-6½	1-2	2-2	2-11	1-11	2-6	1-7	2-0	1-3	1-6	1-0	1-4								
42	4½	51¼	31⅞	4-2⅞	9-2¼	9-7½	9-9¾	1-4	2-6	3-5	2-2	3-0	1-10	2-6	1-7	2-0	1-3	1-7	1-2	1-6						
48	5	58½	36	4-8	10-5¾	11-0	11-1⅞	1-6	2-10	3-11	2-6	3-5	2-2	3-0	1-10	2-6	1-6	2-1	1-3	1-7						
54	5½	65	40	5-1¼	11-6¾	12-1¾	12-3⅝	1-8	3-2	4-5	2-10	3-11	2-6	3-5	2-2	2-11	1-10	2-5	1-6	2-0	1-5	1-10				
60	6	73	45	5-7¼	12-10¾	13-6¾	13-8⅝	1-10	3-7	4-11	3-3	4-5	2-11	3-11	2-7	3-6	2-3	3-0	1-10	2-6	1-6	2-1	1-6	2-0		
72	7	88	54	6-6¼	15-2¾	16-0⅝	16-2½	2-2	4-4	5-9	4-0	5-4	3-8	4-10	3-3	4-5	2-11	3-11	2-7	3-5	2-3	3-0	1-11	2-6	1-10	2-4

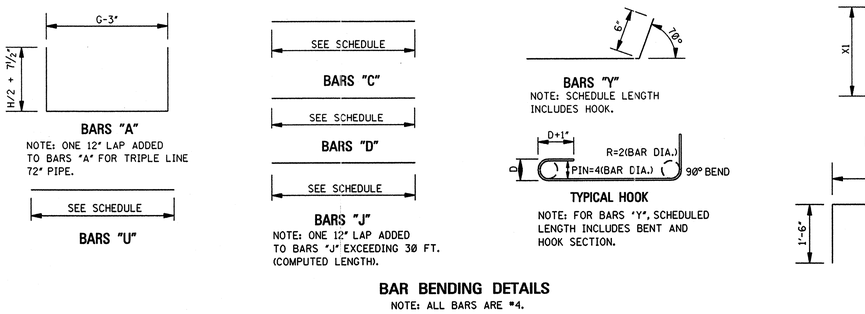

BAR BENDING DETAILS

NOTE: ALL BARS ARE #4.

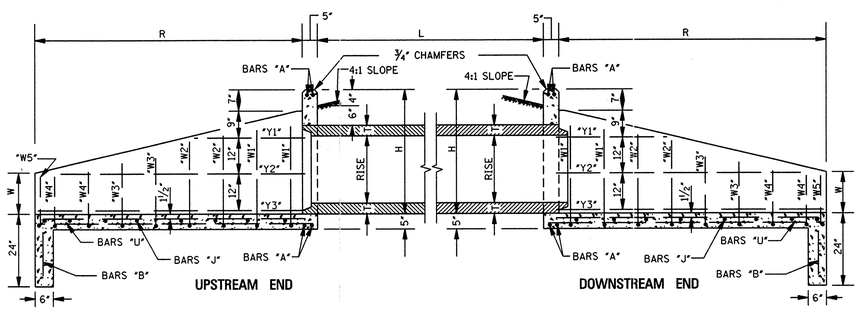

SECTION B–B

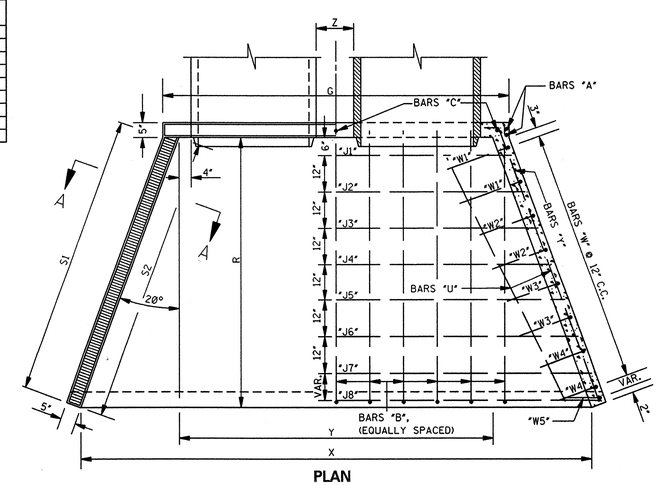

PLAN

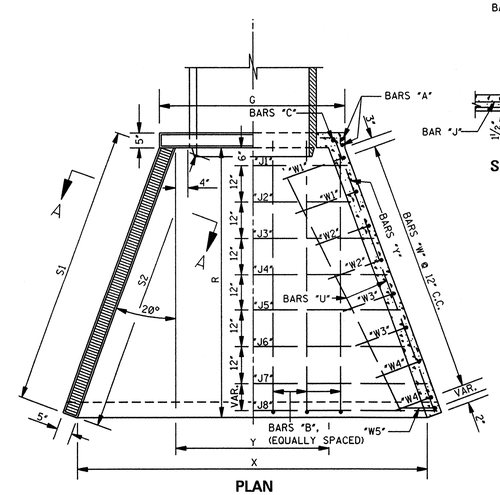

PLAN

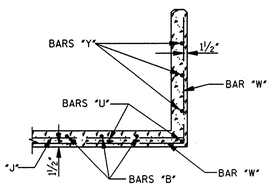

SECTION A–A

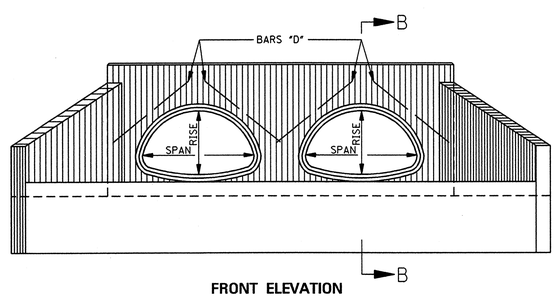

FRONT ELEVATION

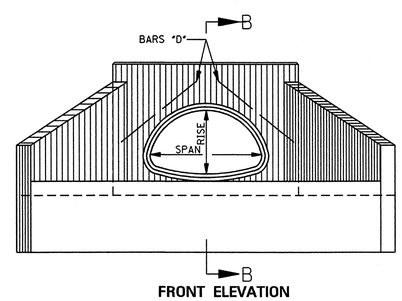

FRONT ELEVATION

BY	MISSISSIPPI DEPARTMENT OF TRANSPORTATION ROADWAY DESIGN DIVISION STANDARD PLAN	
REVISION	**HEADWALLS FOR CONCRETE ARCH PIPE, 4:1 SLOPE, 0°– 15° SKEW**	WORKING NUMBER HWA-4100
DATE	ISSUE DATE: OCTOBER 1, 1998	SHEET NUMBER 351

GENERAL NOTES:

1. SPECIFICATIONS: MISSISSIPPI DEPARTMENT OF TRANSPORTATION, LATEST EDITION.
2. ALL CONCRETE SHALL BE CLASS "B".
3. ALL EXPOSED EDGES SHALL BE CHAMFERED ¾".
4. EXPOSED CONCRETE SURFACES SHALL BE FINISHED IN ACCORDANCE WITH THE APPLICABLE SECTION OF THE MDOT SPECIFICATIONS.
5. ALL LENGTHS AND QUANTITIES IN THE TABLES HEREON ARE BASED ON CONCRETE TONGUE & GROOVE PIPE.
6. DIMENSIONS SHOWN FOR BAR SPACING ARE TO ℄ BARS.
7. REINFORCEMENT (SINGLE LINE) FOR CONCRETE ARCH PIPE SHALL CONFORM TO REQUIREMENTS OF AASHTO M 206 FOR CLASS OF PIPE SHOWN ON PLANS.
8. QUANTITIES SHOWN SHALL BE THE BASIS FOR FINAL PAYMENT UNLESS AUTHORIZED MODIFICATIONS ARE MADE.

STATE	PROJECT NO.
MISS.	

REINFORCING COMMON TO FLARED HEADWALLS FOR SINGLE AND DOUBLE LINE PIPE CULVERTS

EQUAL PIPE SIZE	UL		US		YL1		YL2		YL3		YL4		YL5		YL6		YS1		YS2		YS3		YS4		YS5		YS6	
	NO	LGTH	NO	LGTH	NO	LGTH	NO	LGTH	NO	LGTH	NO	LGTH	NO	LGTH	NO	LGTH	NO	LGTH	NO	LGTH	NO	LGTH	NO	LGTH	NO	LGTH	NO	LGTH
18	2	5-9	2	4-4	1	4-6	1	6-11									1	3-3	1	5-2								
24	2	8-2	2	6-0	1	4-4	1	9-4									1	3-3	1	6-10								
30	2	9-2	2	6-8	1	4-4	1	9-8	1	10-4							1	3-3	1	7-4	1	7-6						
36	2	10-8	2	7-9	1	4-5	1	9-10	1	11-10							1	3-3	1	7-4	1	8-8						
42	2	12-4	2	8-11	1	4-2	1	9-8	1	13-6							1	3-3	1	7-4	1	9-10						
48	2	14-2	2	10-3	1	4-3	1	9-9	1	15-3	1	15-3					1	3-3	1	7-4	1	11-1	1	11-1				
54	2	15-8	2	11-4	1	4-3	1	9-9	1	15-5	1	16-10					1	3-3	1	7-4	1	11-5	1	12-2				
60	2	17-7	2	12-8	1	4-7	1	10-3	1	15-10	1	18-8	1	18-8			1	3-3	1	7-4	1	11-6	1	13-6	1	13-6		
72	2	20-10	2	15-0	1	4-6	1	10-2	1	15-9	1	21-4	1	22-0	1	22-0	1	3-3	1	7-3	1	11-3	1	15-4	1	15-11	1	15-11

EQUAL PIPE SIZE	WL1		WL2		WL3		WL4		WL5		WL6		WL7		WL8		WL9		WL10		WL11		WS1		WS2		WS3		WS4		WS5		WS6		WS7		WS8	
	NO	LGTH	NO	LGTH	NO	LGTH	NO	LGTH	NO	LGTH	NO	LGTH	NO	LGTH	NO	LGTH	NO	LGTH	NO	LGTH	NO	LGTH	NO	LGTH	NO	LGTH	NO	LGTH	NO	LGTH	NO	LGTH	NO	LGTH	NO	LGTH	NO	LGTH
18	2	2-10	2	2-6	2	1-8	1	1-6															2	2-10	2	2-0	1	1-6										
24	2	4-1	2	3-4	2	2-9	2	2-0	1	1-9													2	3-10	2	3-0	2	2-2	1	1-9								
30	2	4-8	2	3-11	2	3-4	2	2-7	2	2-0													2	4-3	2	3-6	2	2-8	1	2-0								
36	2	5-5	2	4-8	2	4-1	2	3-6	2	2-11	2	2-4											2	5-3	2	4-5	2	3-7	2	2-9	1	2-4						
42	2	6-1	2	5-6	2	4-10	2	4-3	2	3-8	2	2-11	1	2-7									2	6-0	2	5-1	2	4-3	2	3-4	2	2-7						
48	2	7-0	2	6-5	2	5-8	2	5-1	2	4-6	2	3-9	2	3-2	1	2-11							2	6-8	2	6-0	2	5-1	2	4-3	2	3-7	1	2-11				
54	2	7-9	2	7-2	2	6-5	2	5-10	2	5-3	2	4-8	2	3-11	2	3-4	1	3-2					2	7-7	2	6-8	2	5-10	2	4-11	2	4-1	2	3-2				
60	2	8-7	2	8-0	2	7-3	2	6-8	2	6-1	2	5-6	2	4-10	2	4-3	2	3-7					2	8-5	2	7-7	2	6-9	2	5-11	2	5-2	2	4-4	2	3-7		
72	2	10-2	2	9-7	2	8-11	2	8-4	2	7-9	2	7-2	2	6-5	2	5-10	2	5-3	2	4-8	2	4-1	2	10-2	2	9-2	2	8-4	2	7-5	2	6-8	2	5-10	2	4-11	2	4-1

DIMENSIONS AND REINFORCING FOR FLARED HEADWALL FOR SINGLE LINE PIPE CULVERT

EQUAL PIPE SIZE	DIMENSIONS G	X	Y	A NO	A LGTH	B NO	B LGTH	C NO	C LGTH	D NO	D LGTH	J1 NO	J1 LGTH	J2 NO	J2 LGTH	J3 NO	J3 LGTH	J4 NO	J4 LGTH	J5 NO	J5 LGTH	J6 NO	J6 LGTH	J7 NO	J7 LGTH	J8 NO	J8 LGTH	J9 NO	J9 LGTH	J10 NO	J10 LGTH	J11 NO	J11 LGTH	J12 NO	J12 LGTH	J13 NO	J13 LGTH	J14 NO	J14 LGTH	J15 NO	J15 LGTH	J16 NO	J16 LGTH	PAY QUANTITIES FOR ONE HEADWALL CONCRETE (CU. YDS.)	PAY QUANTITIES FOR ONE HEADWALL STEEL (LBS.)
	REINFORCING STEEL																																												
18	4-3½	7-10¼	3-3½	4	7-8	3	6-2	2	2-6	2	2-3	1	4-5	1	5-5	1	6-5	1	7-5	1	8-3																							1.05	106
24	5-0¼	10-3½	4-0¼	4	9-0	4	7-10	2	3-1	2	2-6	1	5-2	1	6-2	1	7-2	1	8-2	1	9-2	1	10-2	1	10-8																			1.65	156
30	5-9¼	11-9¼	4-9½	4	10-1	5	8-7	2	3-5	2	2-9	1	6-0	1	7-0	1	8-0	1	9-0	1	10-0	1	11-0	1	12-0																			2.05	193
36	6-8¼	13-8½	5-8¼	4	11-5	6	9-7	2	3-11	2	3-0	1	6-11	1	7-11	1	8-11	1	9-11	1	10-11	1	11-11	1	12-11	1	14-1																	2.63	240
42	7-5½	15-7¾	6-5½	4	12-8	7	10-9	2	4-4	2	3-5	1	7-8	1	8-8	1	9-8	1	10-8	1	11-8	1	12-8	1	13-8	1	14-8	1	15-8	1	16-0													3.32	302
48	8-3¼	17-9	7-3¼	4	13-11	8	12-1	2	4-10	2	3-10	1	8-5	1	9-5	1	10-5	1	11-5	1	12-5	1	13-5	1	14-5	1	15-5	1	16-5	1	17-5	1	18-2											4.15	381
54	9-0½	19-7	8-0¼	4	15-2	8	13-2	2	5-3	2	4-3	1	9-2	1	10-2	1	11-2	1	12-2	1	13-2	1	14-2	1	15-2	1	16-2	1	17-2	1	18-2	1	19-2	1	20-0									4.95	435
60	9-10½	21-9¼	8-10½	4	16-6	9	14-6	2	5-9	2	4-8	1	10-1	1	11-1	1	12-1	1	13-1	1	14-1	1	15-1	1	16-1	1	17-1	1	18-1	1	19-1	1	20-1	1	21-1	1	22-2							5.99	532
72	11-5½	25-8¼	10-5½	4	19-0	11	16-10	2	6-8	2	5-3	1	11-8	1	12-8	1	13-8	1	14-8	1	15-8	1	16-8	1	17-8	1	18-8	1	19-8	1	20-8	1	21-8	1	22-8	1	23-8	1	24-8	1	25-8	1	26-0	8.10	733

TABLE OF ADDED LENGTHS FOR 30° SKEWED PIPE

EQUAL PIPE SIZE	ADDED LENGTH (FT.) EACH END
18	.66
24	.84
30	1.03
36	1.26
42	1.45
48	1.65
54	1.84
60	2.05
72	2.43

DIMENSIONS AND REINFORCING FOR FLARED HEADWALL FOR DOUBLE LINE PIPE CULVERT

EQUAL PIPE SIZE	DIMENSIONS G	X	Y	Z	A NO	A LGTH	B NO	B LGTH	C NO	C LGTH	D NO	D LGTH	J1 NO	J1 LGTH	J2 NO	J2 LGTH	J3 NO	J3 LGTH	J4 NO	J4 LGTH	J5 NO	J5 LGTH	J6 NO	J6 LGTH	J7 NO	J7 LGTH	J8 NO	J8 LGTH	J9 NO	J9 LGTH	J10 NO	J10 LGTH	J11 NO	J11 LGTH	J12 NO	J12 LGTH	J13 NO	J13 LGTH	J14 NO	J14 LGTH	J15 NO	J15 LGTH	J16 NO	J16 LGTH	PAY QUANTITIES FOR ONE HEADWALL CONCRETE (CU. YDS.)	PAY QUANTITIES FOR ONE HEADWALL STEEL (LBS.)
	REINFORCING STEEL																																													
18	8-0¾	11-7½	7-0¾	1-0	4	11-5	7	6-2	3	2-6	4	2-3	1	8-2	1	9-2	1	10-2	1	11-2	1	12-0																							1.54	150
24	9-6½	14-9¾	8-6½	1-0	4	13-6	9	7-10	3	3-1	4	2-6	1	9-8	1	10-8	1	11-8	1	12-8	1	13-8	1	14-8	1	15-2																			2.38	220
30	11-1	17-0½	10-0¾	1-0	4	15-4	10	8-7	3	3-5	4	2-9	1	11-4	1	12-4	1	13-4	1	14-4	1	15-4	1	16-4	1	17-5																			2.95	266
36	13-1¾	20-2	12-1¾	1-3	4	17-10	12	9-7	4	3-11	4	3-0	1	13-5	1	14-5	1	15-5	1	16-5	1	17-5	1	18-5	1	19-5	1	20-7																	3.85	341
42	14-8¼	22-10¼	13-8	1-3	4	19-10	14	10-9	4	4-4	4	3-5	1	14-11	1	15-11	1	16-11	1	17-11	1	18-11	1	19-11	1	20-11	1	21-11	1	22-11	1	23-3													4.83	430
48	16-7¼	26-1	15-7¼	1-6	4	22-3	16	12-1	4	4-10	4	3-10	1	16-9	1	17-9	1	18-9	1	19-9	1	20-9	1	21-9	1	22-9	1	23-9	1	24-9	1	25-9	1	26-6											6.09	541
54	18-5	28-11¾	17-5	1-9	4	24-6	18	13-2	4	5-3	4	4-3	1	18-7	1	19-7	1	20-7	1	21-7	1	22-7	1	23-7	1	24-7	1	25-7	1	26-7	1	27-7	1	28-7	1	29-4									7.32	637
60	20-4¾	32-3¼	19-4½	2-0	4	27-0	20	14-6	4	5-9	4	4-8	1	20-7	1	21-7	1	22-7	1	23-7	1	24-7	1	25-7	1	26-7	1	27-7	1	28-7	1	29-7	1	30-7	1	31-7	1	32-8							8.90	772
72	23-10¼	38-0¾	22-10	2-3	4	31-4	23	16-10	5	6-8	4	5-3	1	24-11	1	25-1	1	26-1	1	27-1	1	28-1	1	29-1	1	30-1	1	31-1	1	32-1	1	33-1	1	34-1	1	35-1	1	36-1	1	37-1	1	38-1	1	38-5	12.03	1059

DIMENSIONS AND REINFORCING COMMON TO FLARED HEADWALLS FOR SINGLE AND DOUBLE LINE PIPE CULVERTS

EQUAL PIPE SIZE	DIMENSIONS MIN THICK "T"	INSIDE SPAN	INSIDE RISE	H	R	S1	S2	W	WL1 X1	WL1 X	WL2 X1	WL2 X	WL3 X1	WL3 X	WL4 X1	WL4 X	WL5 X1	WL5 X	WL6 X1	WL6 X	WL7 X1	WL7 X	WL8 X1	WL8 X	WL9 X1	WL9 X	WL10 X1	WL10 X	WL11 X1	WL11 X	WS1 X1	WS1 X	WS2 X1	WS2 X	WS3 X1	WS3 X	WS4 X1	WS4 X	WS5 X1	WS5 X	WS6 X1	WS6 X	WS7 X1	WS7 X	WS8 X1	WS8 X
	DETAIL DIMENSIONS FOR COMMON WING WALL REINFORCING STEEL																																													
18	2½	22	13½	2-4¼	4-6¾	6-0½	6-5½	0-8	1-8	1-2	1-5	1-1	0-11	0-9	0-10	0-8															1-8	1-2	1-2	0-10	0-10	0-8											
24	3	28½	18	2-11⅜	6-3¼	8-5½	8-10½	0-10	2-4	1-9	1-11	1-5	1-7	1-2	1-2	0-10	1-0	0-9													2-2	1-8	1-8	1-4	1-2	1-0	1-0	0-9										
30	3½	36¼	22½	3-3½	6-11¾	9-5½	9-10½	1-0	2-8	2-0	2-3	1-8	1-11	1-5	1-6	1-1	1-2	0-10													2-6	1-9	2-0	1-6	1-6	1-2	1-2	0-10										
36	4	43¾	26⅝	3-8⅝	8-0¼	10-11	11-4	1-2	3-1	2-4	2-8	2-0	2-4	1-9	2-0	1-6	1-8	1-3	1-4	1-0											3-0	2-3	2-6	1-11	2-0	1-7	1-6	1-3	1-4	1-0								
42	4½	51⅛	31⅜	4-2⅛	9-2¼	12-7	13-0	1-4	3-6	2-7	3-2	2-4	2-9	2-1	2-5	1-10	2-1	1-7	1-8	1-3	1-6	1-1									3-5	2-7	2-11	2-2	2-5	1-10	1-11	1-5	1-6	1-1								
48	5	58½	36	4-8	10-5¾	14-4¾	14-9¾	1-6	4-0	3-0	3-8	2-9	3-3	2-5	2-11	2-2	2-7	1-11	2-2	1-7	1-10	1-4	1-8	1-3							3-10	2-10	3-5	2-7	2-11	2-2	2-5	1-10	1-11	1-8	1-8	1-3						
54	5½	65	40	5-1¼	11-6¾	15-11¼	16-4¼	1-8	4-5	3-4	4-1	3-1	3-8	2-9	3-4	2-6	3-0	2-3	2-8	2-0	2-3	1-8	1-11	1-5	1-10	1-4					4-4	3-3	3-10	2-10	3-4	2-6	2-10	2-1	2-4	1-9	1-10	1-4						
60	6	73	45	5-7¼	12-10¾	17-9¾	18-2¾	1-10	4-11	3-8	4-7	3-5	4-2	3-1	3-10	2-10	3-6	2-7	3-2	2-4	2-9	2-1	2-5	1-10	2-0	1-7					4-10	3-7	4-4	3-3	3-10	2-11	3-4	2-7	2-11	2-3	2-5	1-11	2-0	1-7				
72	7	88	54	6-6¼	15-2¾	21-1½	21-6½	2-2	5-10	4-4	5-6	4-1	5-1	3-10	4-9	3-7	4-5	3-4	4-1	3-1	3-8	2-9	3-4	2-6	3-0	2-3	2-8	2-0	2-4	1-9	5-10	4-4	5-3	3-11	4-9	3-7	4-3	3-2	3-10	2-10	3-4	2-6	2-10	2-1	2-4	1-9

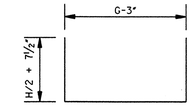

BARS "A"

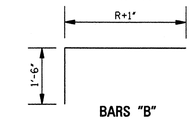

BARS "B"

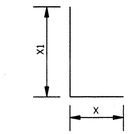

BARS "WL" & "WS"

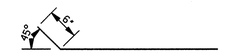

BARS "YL"

SEE SCHEDULE

BARS "UL" & "US"

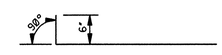

BARS "YS"

SEE SCHEDULE

BARS "C"

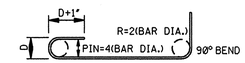

TYPICAL HOOK

NOTE: FOR BARS "YL" & "YS", SCHEDULED LENGTH INCLUDES BENT AND HOOK SECTION.

SEE SCHEDULE

BARS "D"

SEE SCHEDULE

BARS "J"

NOTE: ONE 12" LAP ADDED TO BARS "J" EXCEEDING 30 FT. (COMPUTED LENGTH).

BAR BENDING DETAILS

NOTE: ALL BARS ARE #4. IN BAR DESIGNATIONS (e.g. "YS" & "YL"), S DENOTES SHORT WING AND L DENOTES LONG WING.

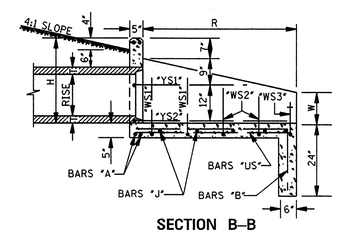

SECTION B–B

GENERAL NOTES:

1. SPECIFICATIONS: MISSISSIPPI DEPARTMENT OF TRANSPORTATION, LATEST EDITION.
2. ALL CONCRETE SHALL BE CLASS "B".
3. ALL EXPOSED EDGES SHALL BE CHAMFERED ¾".
4. EXPOSED CONCRETE SURFACES SHALL BE FINISHED IN ACCORDANCE WITH THE APPLICABLE SECTION OF THE MDOT SPECIFICATIONS.
5. ALL LENGTHS AND QUANTITIES IN THE TABLES HEREON ARE BASED ON CONCRETE TONGUE & GROOVE PIPE.
6. DIMENSIONS SHOWN FOR BAR SPACING ARE TO ℄ BARS.
7. ARCH PIPE SHALL CONFORM TO REQUIREMENTS OF AASHTO M 206 FOR CLASS OF PIPE SHOWN ON PLANS.
8. QUANTITIES SHOWN SHALL BE THE BASIS FOR FINAL PAYMENT UNLESS AUTHORIZED MODIFICATIONS ARE MADE.

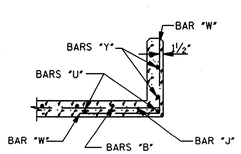

SECTION A–A

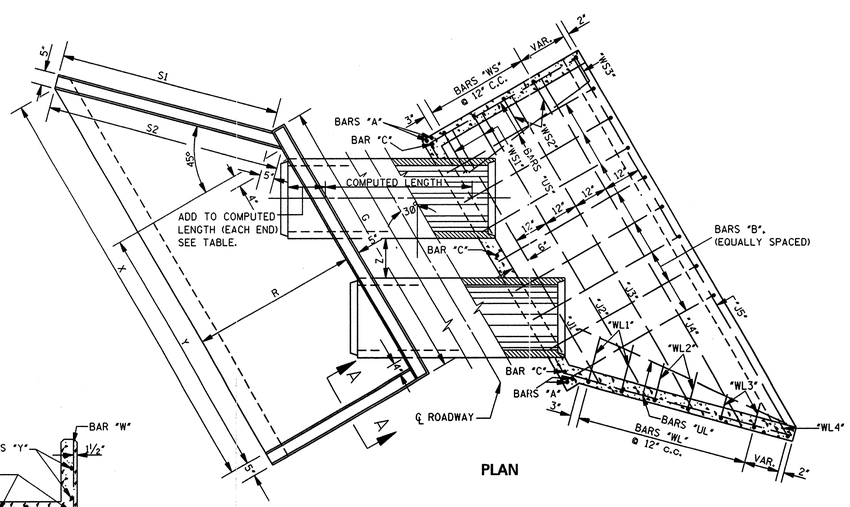

PLAN

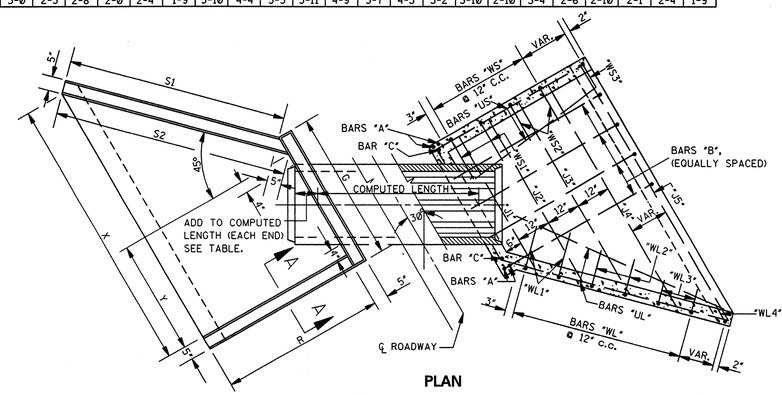

PLAN

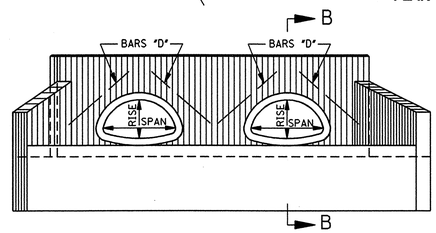

FRONT ELEVATION

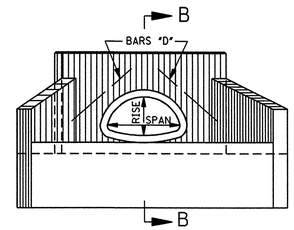

FRONT ELEVATION

DATE	REVISION	BY

MISSISSIPPI DEPARTMENT OF TRANSPORTATION
ROADWAY DESIGN DIVISION
STANDARD PLAN

HEADWALLS FOR CONCRETE ARCH PIPE, 4:1 SLOPE, 30° SKEW

ENGLISH

WORKING NUMBER HWA-4130

ISSUE DATE: OCTOBER 1, 1998

SHEET NUMBER 352

STATE	PROJECT NO.
MISS.	

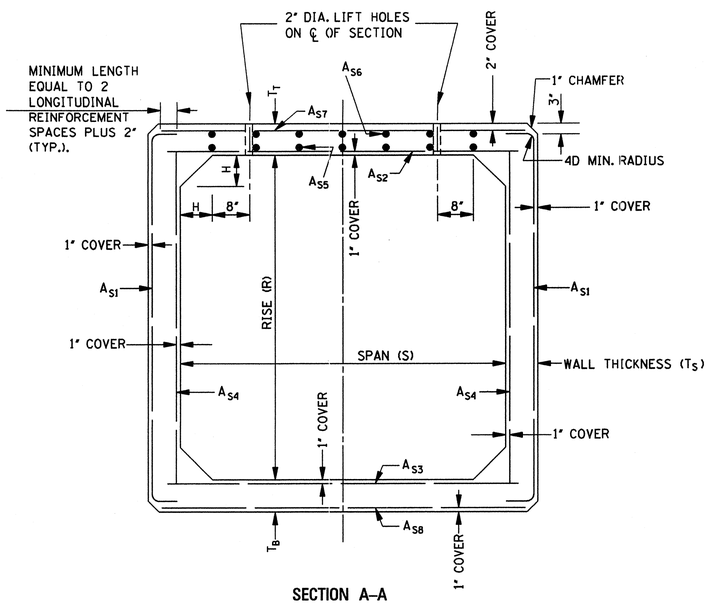

SECTION A–A

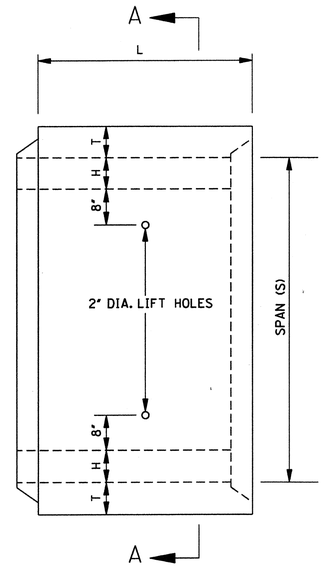

PLAN

ASTM C 850 (AASHTO M 273) DESIGN FOR LESS THAN 2' OF COVER

SPAN (FT.)	RISE (FT.)	COVER EQUAL TO OR LESS THAN 2 FEET ASTM C 850 DESIGN (AASHTO M 273) TABLE 1			COVER OF 2 FEET TO MAXIMUM AS SHOWN ASTM C 789 DESIGN (AASHTO M 259) TABLE 1	
		MINIMUM THICKNESS (INCHES)			TOP, BOTTOM & WALL THICKNESS (T) (INCHES)	MAXIMUM FILL HEIGHT TO TOP OF BOX (FEET)
		TOP SLAB (T_T)	BOTTOM SLAB (T_B)	WALL (T_S)		
4	2	7½	6	5	5	18
6	4	8	7	7	7	18
8	4	8	8	8	8	14
* 10	4	10	10	10	10	5
6	5	8	7	7	7	18
8	5	8	8	8	8	12
10	5	10	10	10	10	14
6	6	8	7	7	7	18
8	6	8	8	8	8	12
10	6	10	10	10	10	14
8	8	8	8	8	8	12
10	8	10	10	10	10	12

*NOTE: SPECIAL DESIGN (SEE NOTE 3).

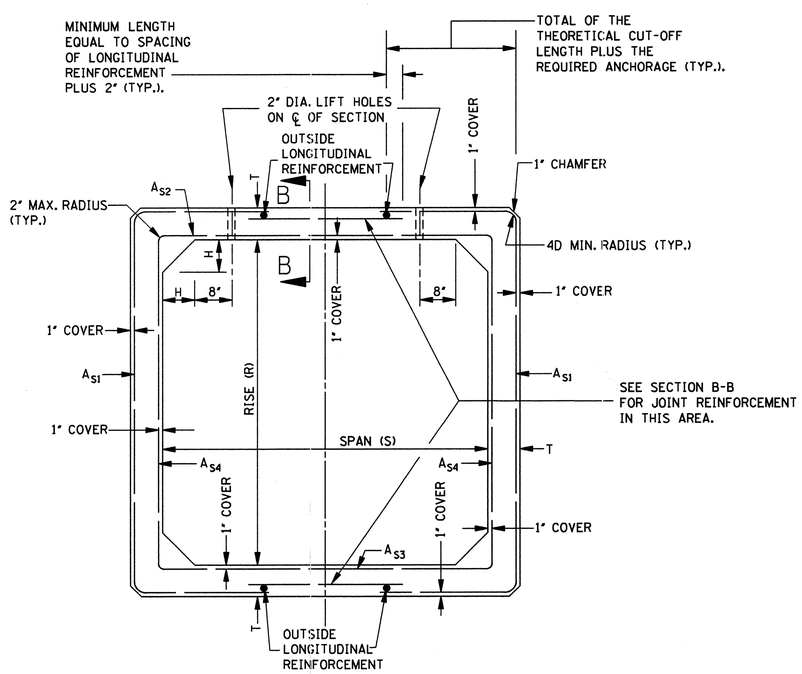

SECTION A–A

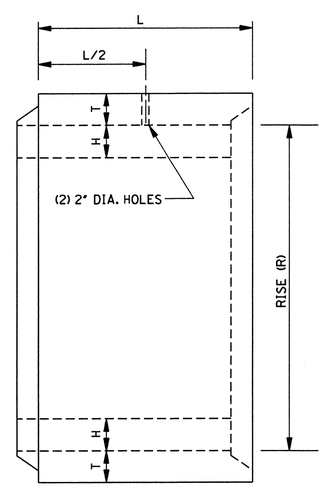

ELEVATION

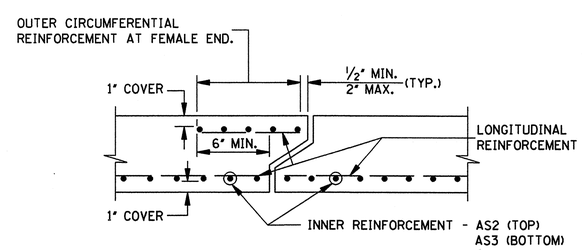

SECTION B–B

NOTE: TOP SLAB REINFORCEMENT SHOWN. BOTTOM SLAB REINFORCEMENT SIMILAR.

ASTM C 789 (AASHTO M 259) DESIGN FOR 2' OR MORE COVER

GENERAL NOTES:

1. THE PRECAST REINFORCED CONCRETE BOX SECTION, EXCLUDING SPECIAL DESIGNS, SHALL BE DESIGNED AND MANUFACTURED IN ACCORDANCE WITH THE SPECIFICATION OF ASTM C 850 (AASHTO M 273) (TABLE 1) FOR LESS THAN 2 FEET OF COVER SUBJECTED TO HIGHWAY LOADING OR ASTM C 789 (AASHTO M 259) (TABLE 1) FOR 2 FEET OR MORE EARTH COVER.
2. THE HAUNCH DIMENSION ("H") IS EQUAL TO THE WALL THICKNESS.
3. CONCRETE BOXES THAT ARE INDICATED AS SPECIAL DESIGNS HAVE BEEN APPROVED AND ARE ON FILE AT THE ROADWAY DESIGN AND MATERIALS DIVISION OF THE MISSISSIPPI DEPARTMENT OF TRANSPORTATION, AND SHALL BE MANUFACTURED IN ACCORDANCE WITH THE SPECIFICATIONS OF ASTM C 850 (AASHTO M 273) (TABLE 1) FOR LESS THAN 2 FEET OF COVER SUBJECTED TO HIGHWAY LOADING OR ASTM C 789 (AASHTO M 259) (TABLE 1) FOR 2 FEET OR MORE EARTH COVER.

DATE	REVISION	BY

MISSISSIPPI DEPARTMENT OF TRANSPORTATION
ROADWAY DESIGN DIVISION
STANDARD PLAN

PRECAST CONCRETE BOX CULVERT

ENGLISH

WORKING NUMBER PBC-1

ISSUE DATE: OCTOBER 1, 1998

SHEET NUMBER 353

STATE	PROJECT NO.
MISS.	

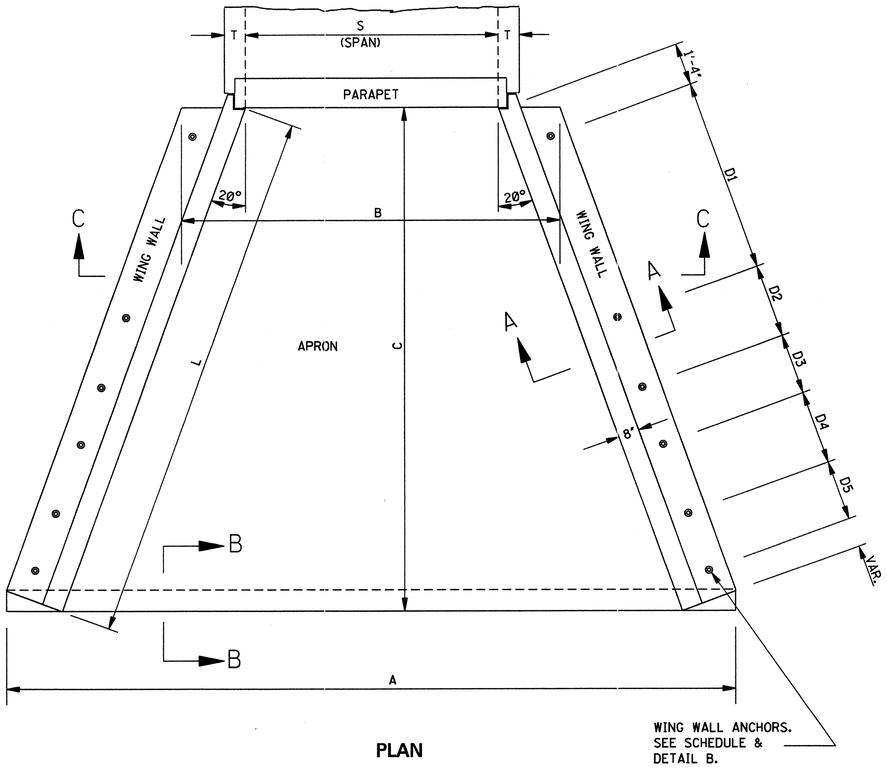

PLAN

TABLE OF DIMENSIONS

SPAN S	RISE R	WALL THICKNESS T	APRON WIDTH A	APRON WIDTH B	APRON LENGTH C	WEIGHTS: INSIDE APRON TONS	WEIGHTS: MIDDLE APRON TONS	WEIGHTS: TOE WALL APRON TONS	WING HEIGHT H	WING LENGTH L	WING HEIGHT W	WEIGHT TONS	WING WALL ANCHORS: D1	D2	D3	D4	D5	REINFORCING STEEL ✱: S1	S2	S3	S4	S5	S6
4'	2'					NOT AVAILABLE																	
4'	4'					NOT AVAILABLE																	
6'	4'	8"	15'-3¼"	9'-11"	8'-0"	-	-	5.7	4'-8"	8'-4"	1'-10"	1.9	6'-2"	-	-	-	-	.10	.10	.10	.10	.10	.10
8'	4'	8"	17'-3¼"	11'-11"	8'-0"	-	-	6.5	4'-8"	8'-4"	1'-10"	1.9	6'-2"	-	-	-	-	.10	.10	.10	.10	.10	.10
10'	4'	10"	19'-3¼"	13'-11"	8'-0"	-	-	7.3	4'-8"	8'-4"	1'-10"	1.9	6'-2"	-	-	-	-	.10	.10	.10	.10	.10	.10
6'	5'	8"	15'-3¼"	9'-11"	8'-0"	-	-	5.7	5'-8"	8'-4"	2'-10"	2.3	6'-2"	-	-	-	-	.12	.10	.10	.10	.10	.10
8'	5'	8"	17'-3¼"	11'-11"	8'-0"	-	-	6.5	5'-8"	8'-4"	2'-10"	2.3	6'-2"	-	-	-	-	.12	.10	.10	.10	.10	.10
10'	5'	10"	19'-3¼"	13'-11"	8'-0"	-	-	7.3	5'-8"	8'-4"	2'-10"	2.3	6'-2"	-	-	-	-	.12	.10	.10	.10	.10	.10
6'	6'	8"	18'-2"	9'-11"	12'-0"	5.1	-	4.0	6'-8"	12'-7"	2'-5"	3.6	6'-2"	2'-4"	1'-11"	-	-	.20	.10	.10	.10	.10	.10
8'	6'	8"	20'-2"	11'-11"	12'-0"	5.9	-	4.5	6'-8"	12'-7"	2'-5"	3.6	6'-2"	2'-4"	1'-11"	-	-	.20	.10	.10	.10	.10	.10
10'	6'	10"	22'-2"	13'-11"	12'-0"	6.7	-	5.0	6'-8"	12'-7"	2'-5"	3.6	6'-2"	2'-4"	1'-11"	-	-	.20	.10	.10	.10	.10	.10
8'	8'	8"	23'-1"	11'-11"	16'-0"	5.9	3.8	5.2	8'-8"	16'-11"	3'-0"	5.9	6'-2"	2'-4"	1'-11"	2'-4"	1'-11"	.45	.10	.10	.10	.10	.10
10'	8'	10"	25'-1"	13'-11"	16'-0"	6.7	4.2	5.6	8'-8"	16'-11"	3'-0"	5.9	6'-2"	2'-4"	1'-11"	2'-4"	1'-11"	.45	.10	.10	.10	.10	.10

✱REINFORCING STEEL SCHEDULE - SQUARE INCHES OF STEEL PER LINEAR FOOT OF WING.

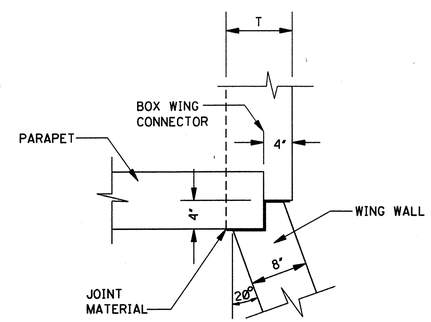

DETAIL A

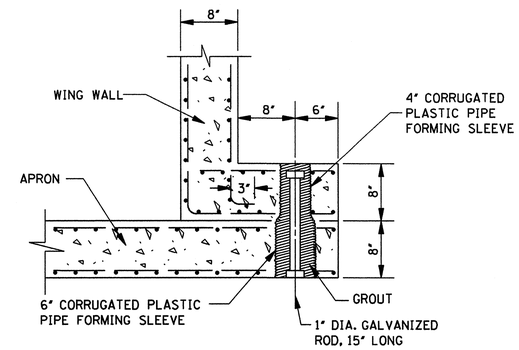

DETAIL B

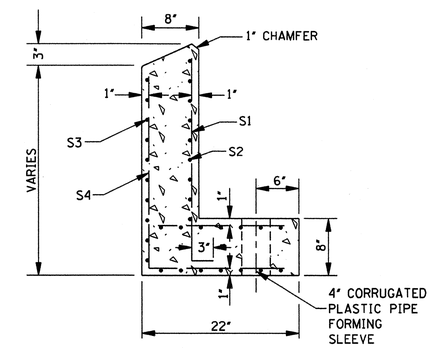

WING WALL
SECTION A–A

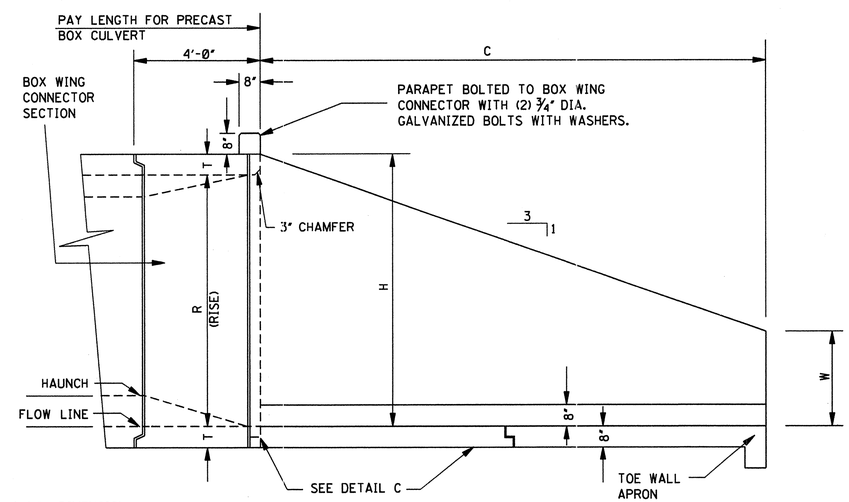

HAUNCH DIMENSION:
8" FOR 8" WALL THICKNESS.
10" FOR 10" WALL THICKNESS.

SIDE ELEVATION

APRONS: FOR 4' & 5' RISE (ONE APRON UNIT REQUIRED): TOE WALL APRON LENGTH = 8'-0";
INSIDE APRON UNIT NOT REQUIRED.
FOR 6' RISE (TWO APRON UNITS REQUIRED): INSIDE APRON LENGTH = 8'-0";
TOE WALL APRON LENGTH = 4'-0".
FOR 8' RISE (THREE APRON UNITS REQUIRED): INSIDE APRON LENGTH = 8'-0";
MIDDLE APRON LENGTH = 4'-0"; TOE WALL APRON LENGTH = 4'-0".

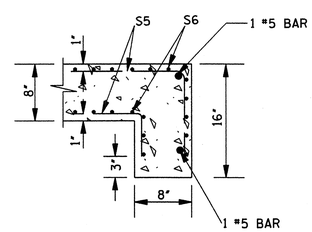

TOE WALL
SECTION B–B

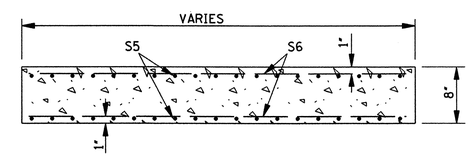

APRON
SECTION C–C

GENERAL NOTES:

1. THE BOX WING CONNECTOR SECTION SHALL MEET THE DESIGN REQUIREMENT OF THE PRECAST CONCRETE BOX CULVERT TO WHICH IT IS ATTACHED. SEE SHEET PBC-1 FOR BOX CULVERT DETAILS.
2. CONCRETE DESIGN STRENGTH: 5000 PSI
3. REINFORCED STEEL: 75,000 LBS. YIELD STRENGTH.
4. GALVANIZATION FOR REQUIRED HARDWARE SHALL MEET THE REQUIREMENTS OF AASHTO M 111.

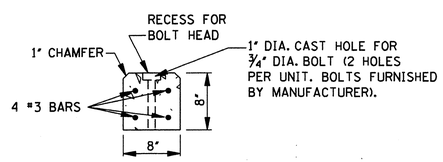

PARAPET DETAIL

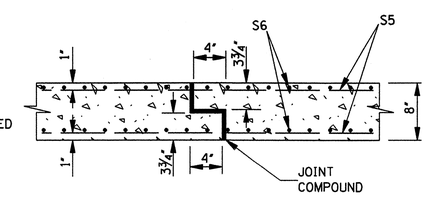

TYPICAL APRON JOINT
DETAIL C

DATE	REVISION	BY	MISSISSIPPI DEPARTMENT OF TRANSPORTATION ROADWAY DESIGN DIVISION STANDARD PLAN

PRECAST CONCRETE BOX CULVERT END SECTIONS

ENGLISH

WORKING NUMBER
PBC-2

ISSUE DATE: OCTOBER 1, 1998

SHEET NUMBER
354