STATE	PROJECT NO.
MISS.	

GENERAL DATA

SS-2 INLET SIZE	WALL THICKNESS	INSIDE DIMENSION		OUTSIDE DIMENSION		BASE HEIGHT	RISER HEIGHT	WEIGHTS				
	WT	IW	IL	OW	OL	B	R	BOTTOM	BASE/RISER	INLET TOP	EXTENSION	EXTENSION TOP
FEET	INCHES	INCHES		INCHES		3" INCREMENTS		LB	LB/FT	LB	LB	LB
3 X 5	5	36	60	46	70	24-54	18-48	1125	1114	1880	1865	1070

3' x 5' WALL REINFORCEMENT (SQ. IN. PER LIN. FT.)

DEPTH OF INSTALLATION	BASE		TOP RISER		INTERIOR RISER #1		INTERIOR RISER #2		INTERIOR RISER #3		INTERIOR RISER #4	
	AREA	LB/FT	AREA	LB/FT	AREA	LB/FT	AREA	LB/FT	AREA	LB/FT	AREA	LB/FT
0-8	0.30	36.969	0.24	29.575	-	-	-	-	-	-	-	-
0-12	0.60	78.867	0.24	29.575	0.60	78.867	-	-	-	-	-	-
0-16	0.88	110.005	0.24	29.575	0.60	78.867	0.74	95.338	-	-	-	-
0-20	1.18	139.340	0.24	29.575	0.60	78.867	0.74	95.338	1.06	124.672	-	-
0-24	1.44	176.008	0.24	29.575	0.60	78.867	0.74	95.338	1.06	124.672	1.20	146.673

CONCRETE QUANTITIES

SS-2 INLET SIZE	BOTTOM C.Y.	RISER C.Y./FT	TOP C.Y.	EXTENSION C.Y.
3X5	0.279	0.275	0.464	0.724

NOTES: CONCRETE CUBIC YARDS PER INLET = BOTTOM + (TOTAL RISER HEIGHT (FT) x C.Y./FT) + TOP EXTENSION INCLUDES CURB INLET UNIT + TOP + EXTENSIONS- ANY HOLE OPENINGS EXTENSION BLOCKOUT OPENINGS

BOTTOM/TOP/EXTENSION REINFORCEMENT

SS-2 INLET SIZE	BOTTOM REINFORCEMENT	BOTTOM LB/STEEL	TOP LB/STEEL	EXTENSION LB/STEEL
3X5	#4 @ 9" EW	38.550	116.496	38.305

NOTE: *EXTENSION INCLUDES CURB INLET UNIT PLUS TOP

MINIMUM PIPE DEPTH WITHOUT EXTENSION TOP OF CURB UNIT TO PIPE INVERT TABLE A

ROUND RCP SIZE	DEPTH INCHES	ARCH RCP SIZE	DEPTH INCHES
-	-	-	-
-	-	-	-
12	36	-	-
15	39.5	18x11	32.5
18	42	22x13	34.5
21	44.5	-	-
24	49	29x18	39.5
27	53.5	-	-
30	55	36x23	44.5

MINIMUM PIPE DEPTH WITH EXTENSION TOP OF CURB UNIT TO PIPE INVERT TABLE B

ROUND RCP SIZE	DEPTH INCHES	ARCH RCP SIZE	DEPTH INCHES
-	-	-	-
-	-	-	-
12	55	-	-
15	58	18x11	55
18	61	22x13	58
21	64	-	-
24	67	-	-
27	72	-	-
30	-	-	-

NOTE: BLANK SPACES IN TABLES INDICATE PIPE WILL NOT FIT INTO SIDE OF BOX OR PIPE SIZE IS NOT AVAILABLE.

HOLE OPENING

ROUND RCP		OPENING			ARCH RCP		OPENING		
		INCHES		CONCRETE DEDUCTION PER OPENING (C.Y.)			INCHES		CONCRETE DEDUCTION PER OPENING (C.Y.)
SIZE	T	HO	OP		SIZE	T	HO	OP	
-	-	-	-	-	-	-	-	-	-
-	-	-	-	-	-	-	-	-	-
12	2	20	4	0.017	-	-	-	-	-
15	2.25	24	4.5	0.032	18x11	2.25	25.5x18.5	1.5	0.015
18	2.5	26	4	0.045	22x13	2.5	30x21	1.5	0.045
21	2.75	28	3.5	0.060	-	-	-	-	-
24	3	32	4	0.076	29x18	3	38x27	1.5	0.073
27	3.25	40	6.5	0.095	-	-	-	-	-
30	3.5	40	5	0.116	36x23	3.5	46x33	1.5	0.108

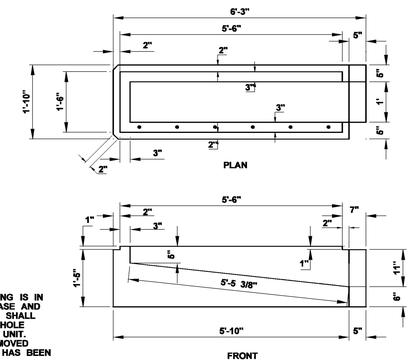

CURB INLET EXTENSION LEFT/RIGHT

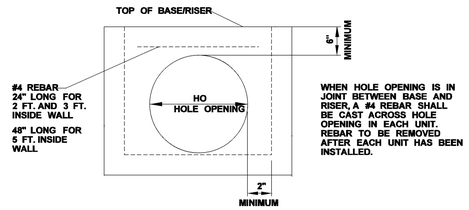

DETAIL FOR HOLE OPENING

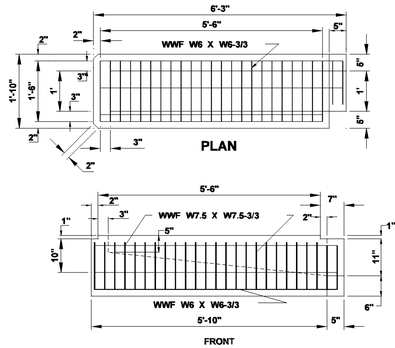

REINFORCEMENT CURB INLET EXTENSION LEFT/RIGHT

CAST-IN-PLACE COLLAR REQUIRED AT ALL PIPE CONNECTIONS. FILLING THE AREA AROUND PIPE IS TO BE INCLUDED IN THE COLLAR. REINFORCEING STEEL MUST EXTEND OUT OF THE BASE/RISER WHEN CAST-IN-PLACE TOP IS USED.

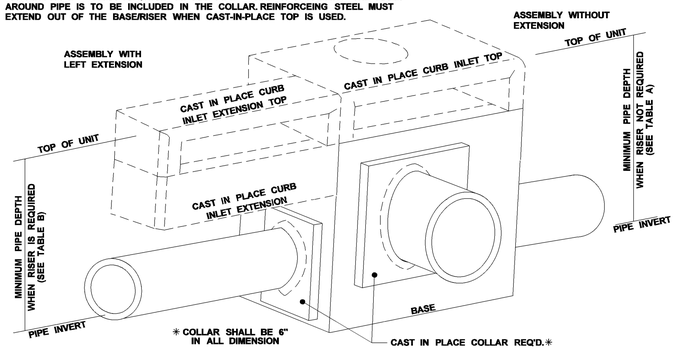

ISOMETRIC VIEW OF PRECAST UNIT

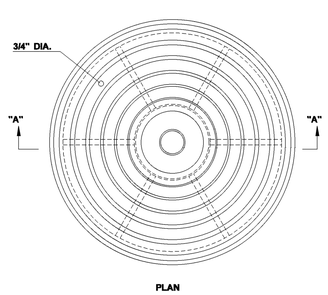

PLAN

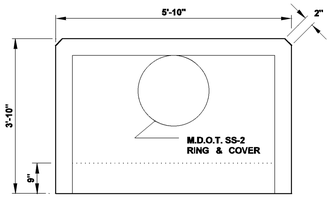

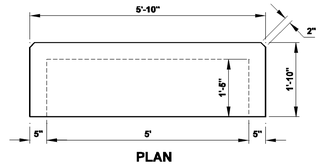

PLAN

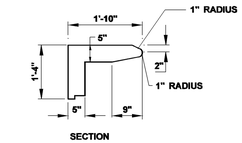

SECTION

CURB INLET EXTENSION TOP LEFT/RIGHT

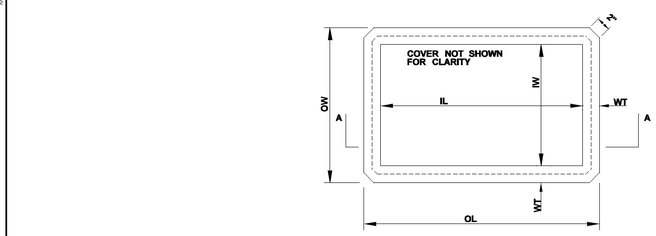

PLAN FOR BASE/RISER INLET/JUNCTION BOX

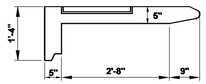

CURB INLET TOP

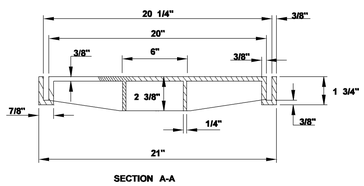

SECTION A-A

MDOT SS-2 RING AND COVER 79 LBS

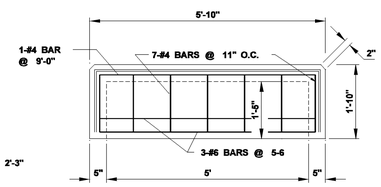

PLAN

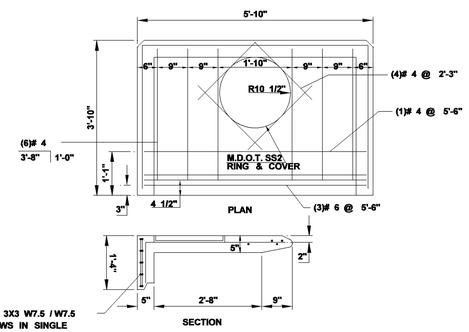

REINFORCEMENT CURB INLET TOP

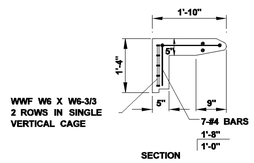

REINFORCEMENT CURB INLET EXTENSION TOP LEFT/RIGHT

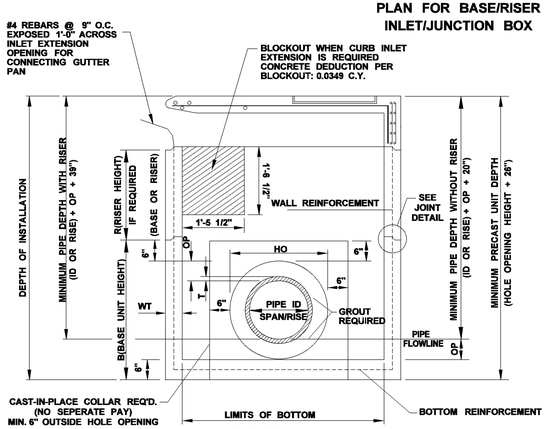

SECTION A-A

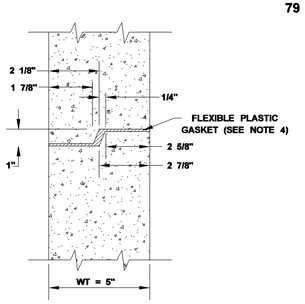

JOINT DETAIL

GENERAL NOTES:

1. CONCRETE SHALL HAVE COMPRESSIVE STRENGTH OF 4000 PSI MINUMUM AT 28 DAYS.
2. REINFORCING FOR BOTTOM AND WALLS MAY BE WELDED WIRE FABRIC, ASTM A-185, AND OF THE AREA AS SHOWN IN TABLE.
3. REINFORCING FOR COVER SHALL BE ASTM A615/A AND OF THE SIZE AS SHOWN IN TABLE AND DRAWINGS
4. JOINT TO BE SEALED WITH FLEXIBLE PLASTIC GASKET FOR JOINT CONDUIT, AASHTO SPECIFICATION M-198 OR MDOT SPECIFICATION.
5. 2 1/2" LIFTING HOLES TO BE LOCATED ON EACH SIDE OF BOX SECTIONS FOR HANDLING.
6. GROUT FOR JOINING PIPE TO PRECAST UNITS WILL BE A COMMERCIAL MASONRY GROUT MEETING MDOT SPECIFICATIONS.
7. WHEN INTERIOR RISER UNITS ARE REQUIRED, UNITS SHALL BE MARKED TO IDENTIFY EACH UNIT.
8. CONCRETE & REINFORCING STEEL FOR PRE-CAST INLETS AND JUNCTION BOXES SHALL BE PAID FOR AS THE CALCULATED QUANTITY SHOWN ON THE RE-CAP SHEET FOR CAST-IN-PLACE INLETS & JUNCTION BOXES
9. CURB INLET TOP & CURB INLET EXTENSION TOP SHALL BE PLACED AT THE SAME GRADE AND CROSS SLOPE REQUIRED ON THE ROADWAY PLANS
10. CAST-IN-PLACE INLET TOP MAY BE AS SHOWN ON THIS DRAWING OR AS PER S.D. SS-2

MISSISSIPPI DEPARTMENT OF TRANSPORTATION

PRECAST UNITS
SS-2 PRECAST INLET
(30" CONCRETE ROUND PIPE AND UNDER)
(36" x 23") CONCRETE ARCH PIPE AND UNDER)

DATE	REVISION	BY

FILENAME: dgns\precastss2.dgn
DESIGN TEAM ____ CHECKED ____ DATE 12/14/10

WORKING NUMBER: PCU-2
SHEET NUMBER

ROADWAY DESIGN DIVISION C.A.D.D. SECTION
MISSISSIPPI DEPARTMENT OF TRANSPORTATION
PLAN