STATE	PROJECT NO.
MISS.	

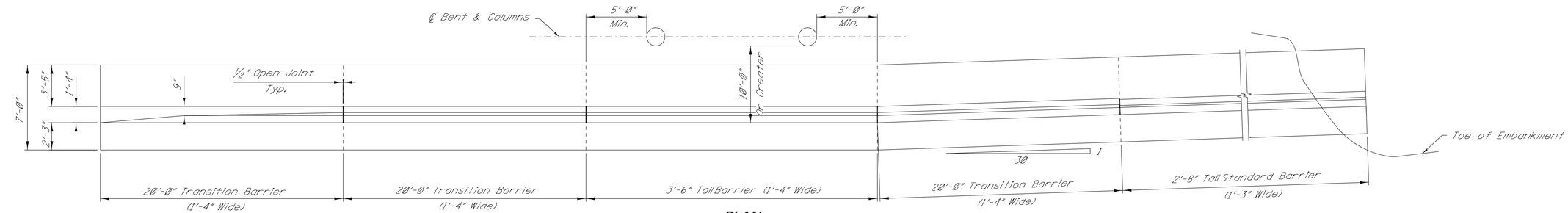

PLAN

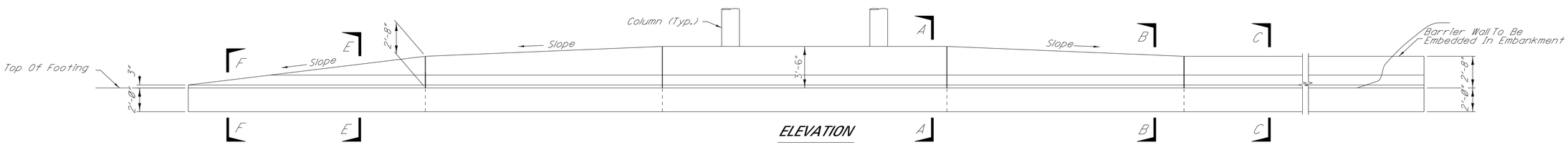

ELEVATION

3'-6" PIER PROTECTION

Cut Condition

DESIGN DATA:

Specifications. . . . . A.A.S.H.T.O., LRFD 2012
Railing Test Level. TL-5
Concrete. . . . . .Class "AA" (4,000 p.s.i.)
Reinforcing. . . . . A.S.T.M. A615 Grade 60 (Fy=60ksi)

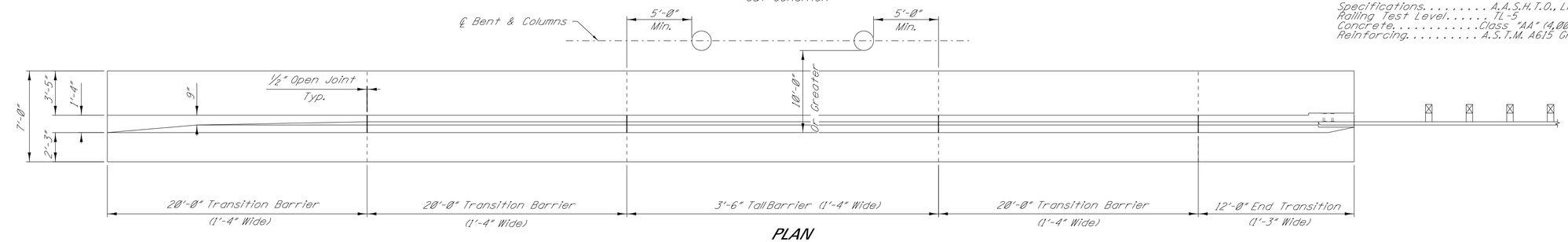

PLAN

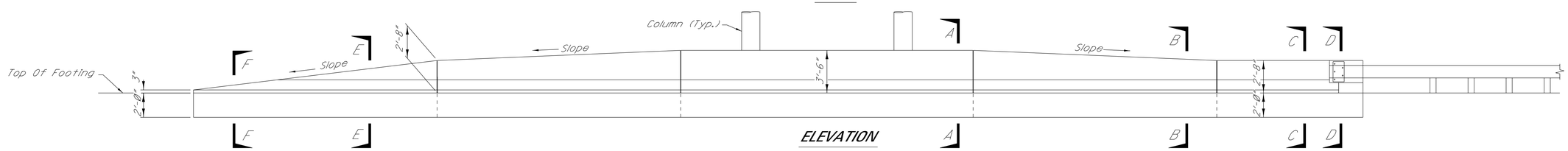

ELEVATION

3'-6" PIER PROTECTION

Fill Condition

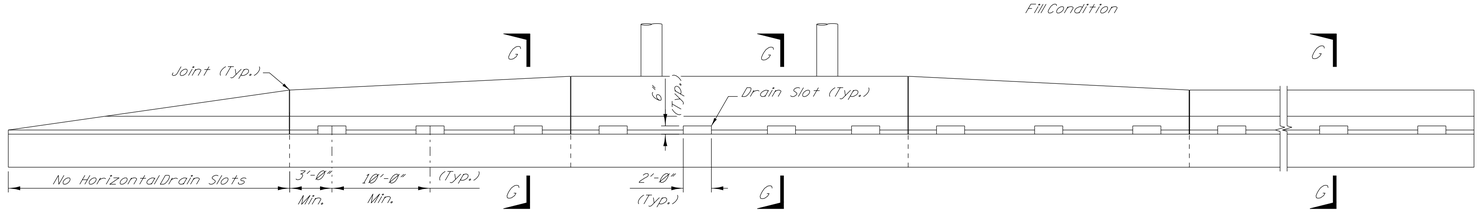

PIER PROTECTION WITH HORIZONTAL DRAIN SLOTS

DATE	REVISION	BY	MISSISSIPPI DEPARTMENT OF TRANSPORTATION
			3'-6" PIER PROTECTION DETAILS
			PRELIMINARY NOT FOR CONSTRUCTION
			COUNTY:
			PROJ. NUM.:
			WORKING NUMBER PPD-A 1
			FILENAME: PIER_PROTECT_RAIL 42.DGN
			DESIGN TEAM ____ CHECKED ____ DATE ____
			SHEET NUMBER PG

PLAN
ROADWAY DESIGN DIVISION
MISSISSIPPI DEPARTMENT OF TRANSPORTATION

4/15/2014 11:30AM PIER_PROTECT_RAIL 42.DGN

STATE	PROJECT NO.
MISS.	

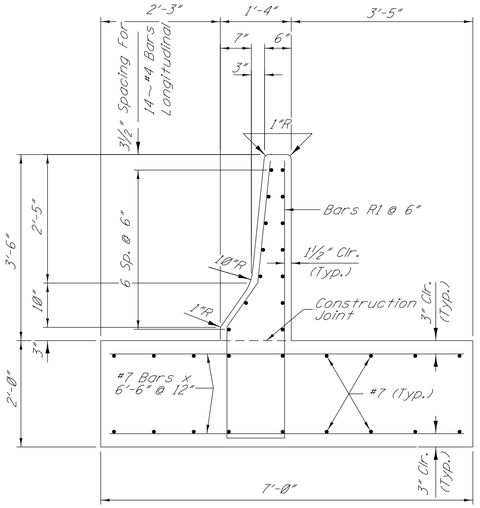

SECTION A–A

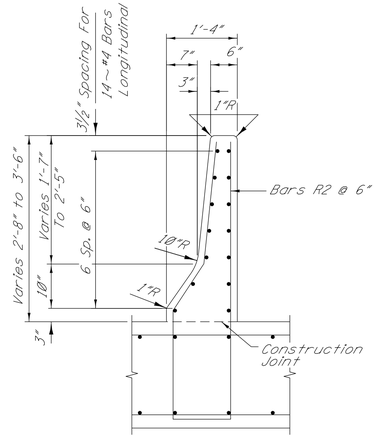

SECTION B–B

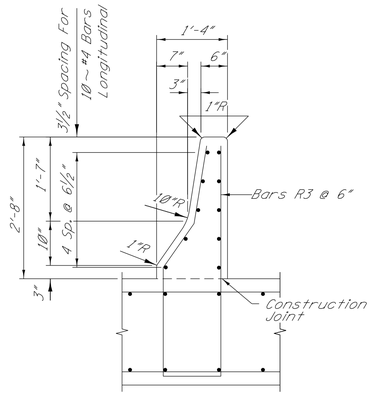

SECTION C–C

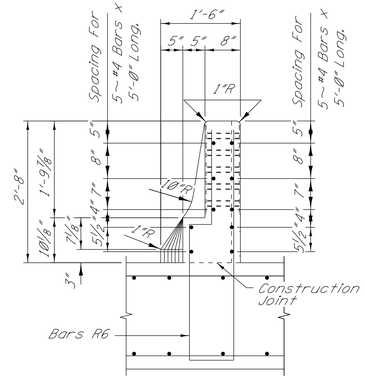

SECTION D–D

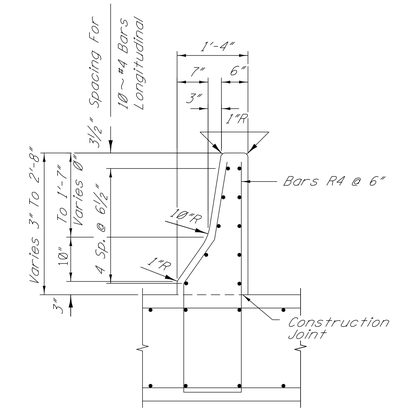

SECTION E–E

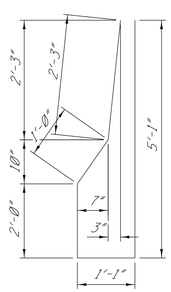

Bars R1~#6

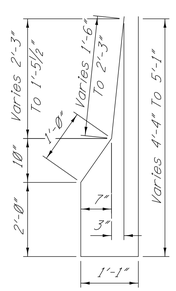

Bars R2~#6

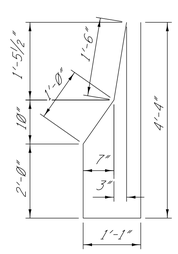

Bars R3~#6

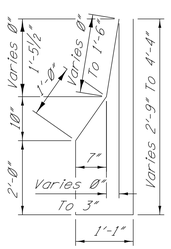

Bars R4~#6

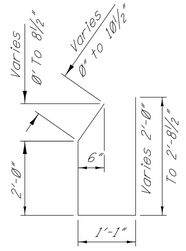

Bars R5~#6

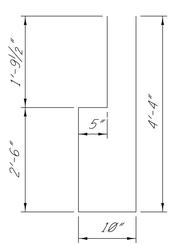

Bars R6~#6

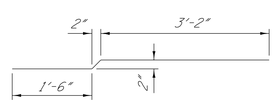

Bars L~#4

BAR BENDING DETAILS

Dimensions Are Out To Out

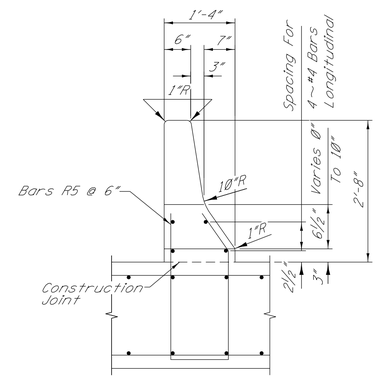

VIEW F–F

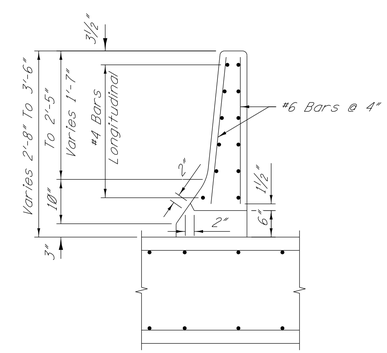

SECTION G–G

DATE	REVISION	BY	MISSISSIPPI DEPARTMENT OF TRANSPORTATION	
			3'-6" PIER PROTECTION DETAILS	PRELIMINARY NOT FOR CONSTRUCTION
			COUNTY:	WORKING NUMBER
			PROJ. NUM.:	PPD-A 2
			FILENAME: PIER_PROTECT_RAIL_42.DGN	SHEET NUMBER
			DESIGN TEAM ____ CHECKED ____ DATE ____	PG

PLAN
ROADWAY DESIGN DIVISION
MISSISSIPPI DEPARTMENT OF TRANSPORTATION

4/15/2014 11:30AM PIER_PROTECT_RAIL_42.DGN

STATE	PROJECT NO.
MISS.	

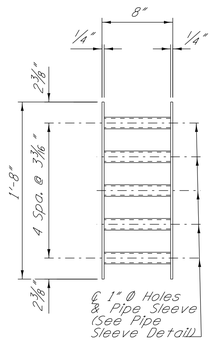

PLATE DETAIL

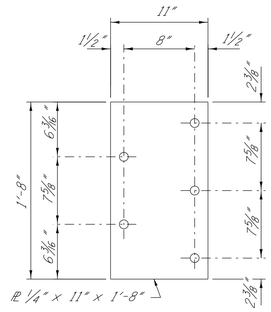

GUARDRAIL ANCHOR ASSEMBLY

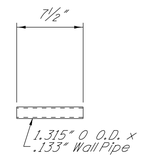

PIPE SLEEVE DETAIL

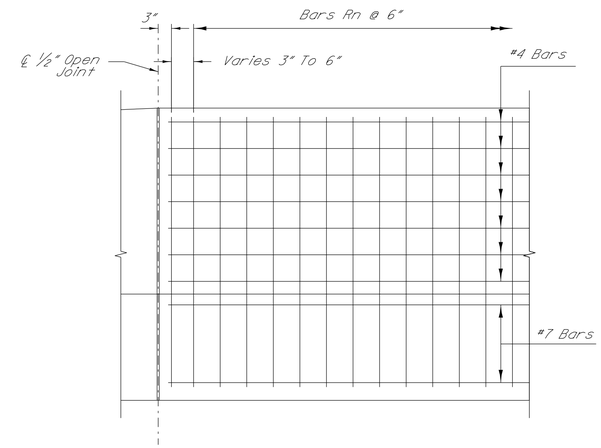

PART ELEVATION PIER PROTECTION

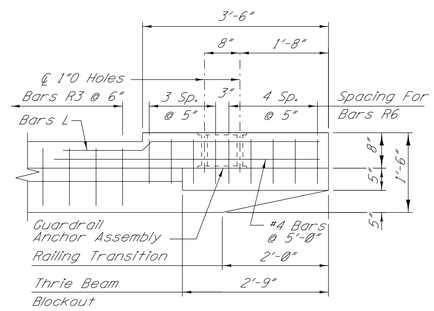

PLAN OF GUARDRAIL END

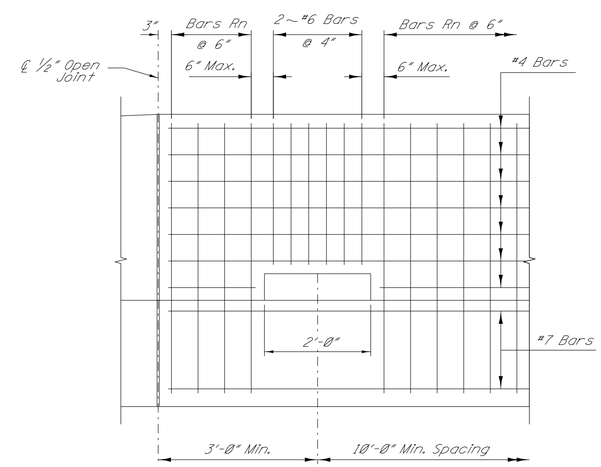

PART ELEVATION PIER PROTECTION

Showing Drain Slot

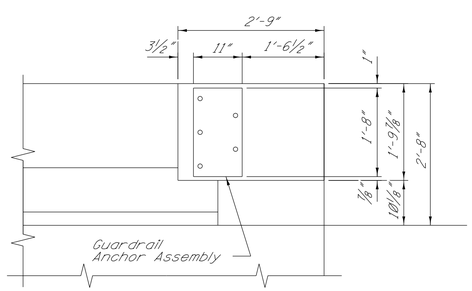

ELEVATION OF GUARDRAIL END

REVISION	BY	DATE

MISSISSIPPI DEPARTMENT OF TRANSPORTATION

3'-6" PIER PROTECTION DETAILS

COUNTY:

PROJ. NUM.:

PRELIMINARY NOT FOR CONSTRUCTION

WORKING NUMBER PPD-A 3

FILENAME: PIER_PROTECT_RAIL 42.DGN

DESIGN TEAM _____ CHECKED _____ DATE _____

SHEET NUMBER PG

PLAN
ROADWAY DESIGN DIVISION
MISSISSIPPI DEPARTMENT OF TRANSPORTATION

4/15/2014 11:31 AM PIER_PROTECT_RAIL 42.DGN