STATE	PROJECT NO.
MISS.	

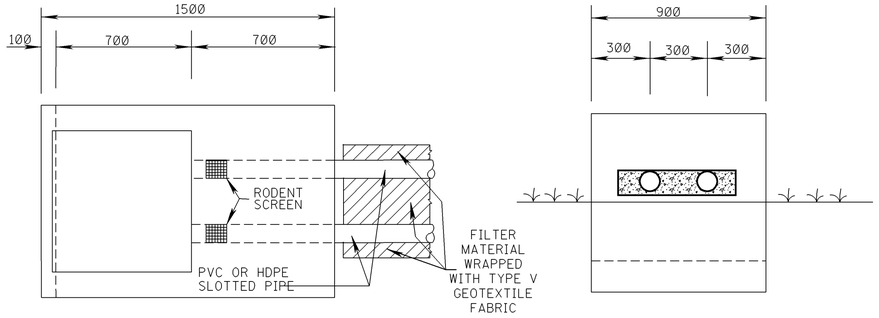

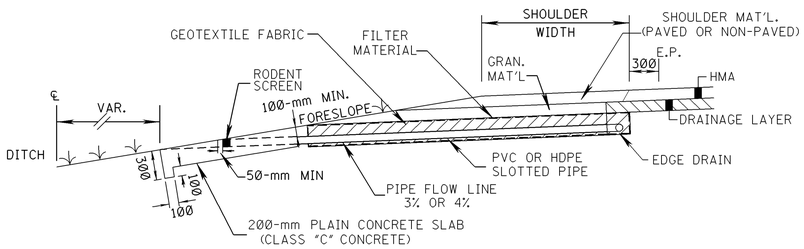

DETAIL OF DUAL EDGEDRAIN OUTLET/VENT APRON

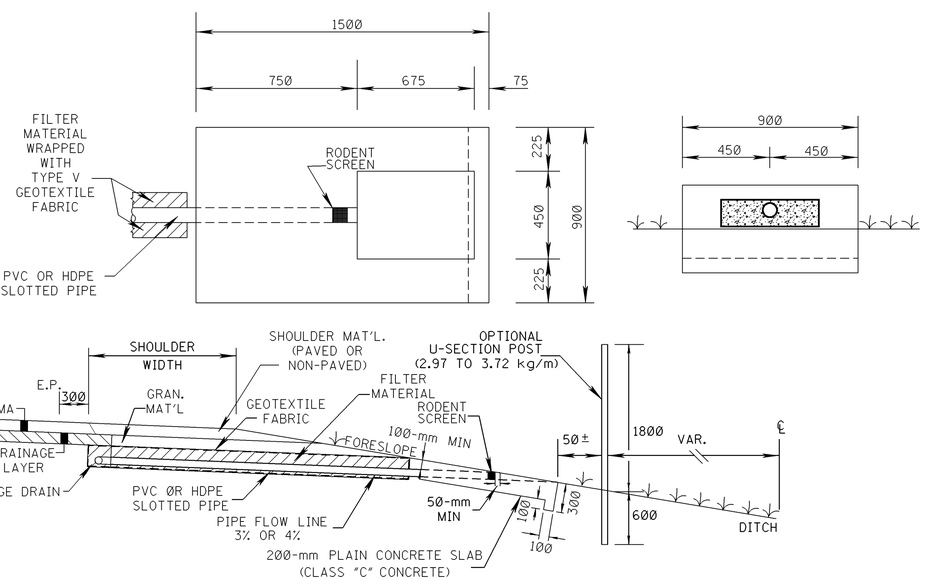

DETAIL OF EDGEDRAIN OUTLET/VENT APRON

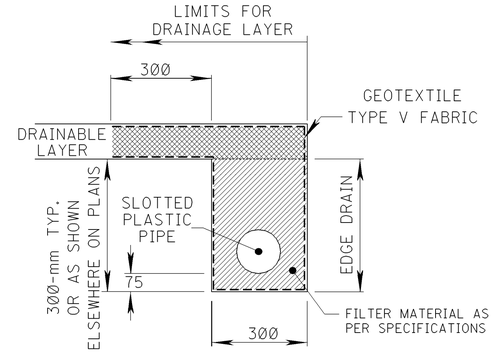

DETAIL "A"

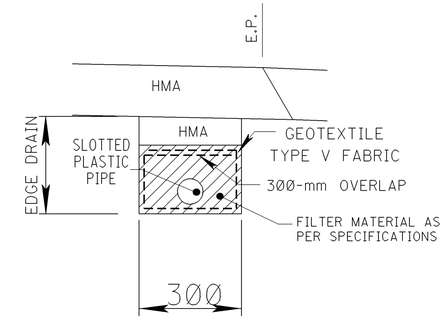

DETAIL "B"

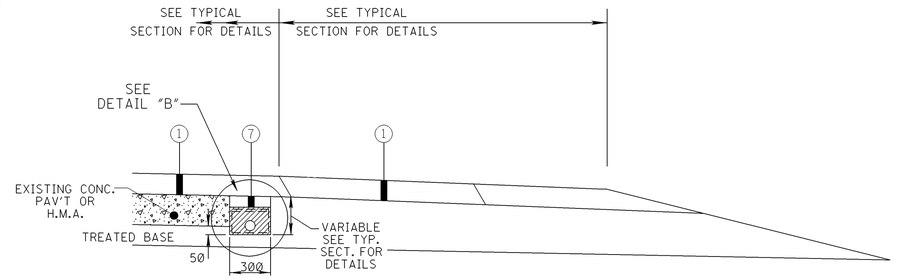

EDGE DRAIN ADDED TO EXISTING FACILITY

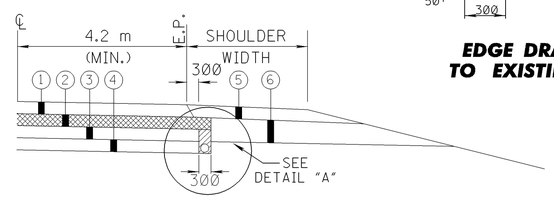

OPEN SHOULDER DETAIL

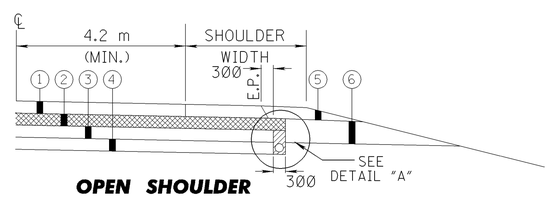

OPEN SHOULDER WITH PAVED SHOULDER DETAIL

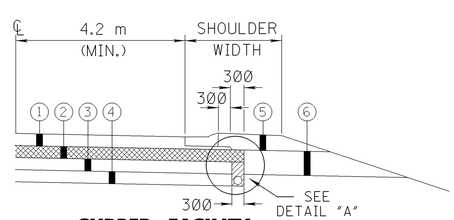

CURBED FACILITY DETAIL

1. HMA
2. DRAINABLE LAYER
3. LFA GRANULAR OR CRUSHED AGGREGATE
4. CHEMICALLY TREATED SUB-GRADE
5. SHOULDER GRANULAR
6. UNTREATED GRANULAR
7. 75-mm HOT MIX ASPHALT

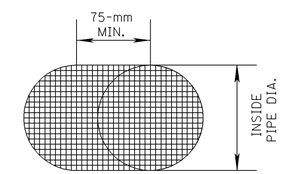

DETAIL OF RODENT SCREEN

75-mm x 75-mm GALVANIZED HARDWARE CLOTH 1.575-mm WIRE OR EQUAL FORMED TO FIT SNUG TO INSIDE OF PIPE. COST OF THE RODENT SCREEN TO BE ABSORBED IN PAY ITEM 907-605-GG (EDGE DRAIN OUTLET/VENT,COMPLETE IN PLACE) (SEE NOTE 6 MED-2)

NOTES :

URBAN EDGE DRAIN OUTLETS TO TIE INTO INLETS. ALL COSTS SHALL BE COVERED UNDER OUTLET/VENT PAY ITEMS.

EDGE DRAINS SHALL BE REQUIRED ONLY ON THE LOW SIDE OF SUPERELEVATION.

0.278 m^3 CLASS "C" CONCRETE REQUIRED FOR 1500-mm x 900-mm APRON.

FOR MORE DETAILS SEE SHEET MED-2

ALL DIMENSIONS ARE IN mm EXCEPT WHERE NOTED

DATE	REVISION	BY

MISSISSIPPI DEPARTMENT OF TRANSPORTATION

EDGE DRAIN DETAIL

CONCRETE APRON AND RODENT SCREEN

WORKING NUMBER MED-1

SHEET NUMBER

FILENAME: metric\med-1.dgn

DESIGN TEAM _____ CHECKED _____ DATE 07-29-02

METRIC PLAN
ROADWAY DESIGN DIVISION C.A.D.D. SECTION
MISSISSIPPI DEPARTMENT OF TRANSPORTATION