FMS CON:

STATE	PROJECT NO.
MISS.	

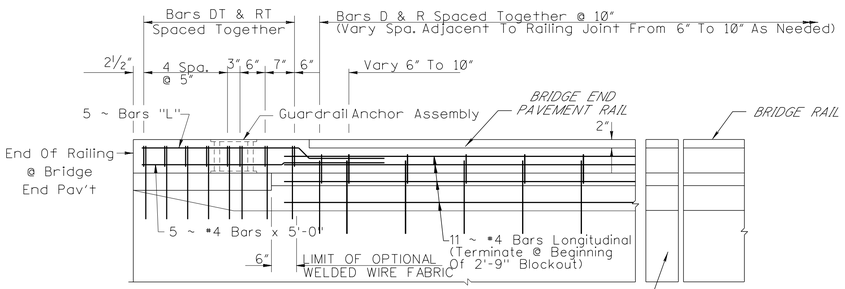

PART PLAN OF LEFT RAILING

(Showing Conventional Reinforcing. See CONSTRUCTION NOTES For Details Of Optional Welded Wire Fabric.)

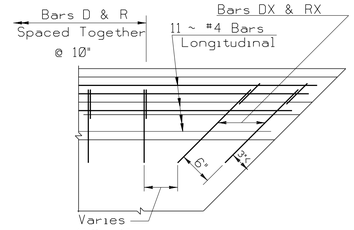

SKEWED PART PLAN OF LEFT RAILING AT BRIDGE END WALL

(Showing Conventional Reinforcing. See CONSTRUCTION NOTES For Details Of Optional Welded Wire Fabric.)

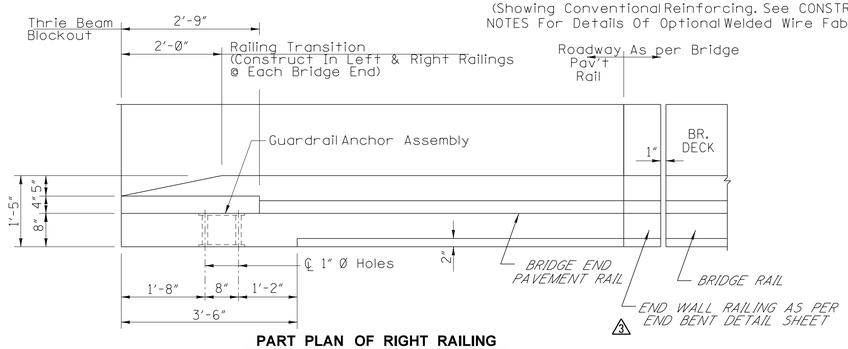

PART PLAN OF RIGHT RAILING

(Showing Concrete Dimensions)

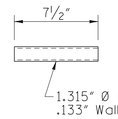

PIPE SLEEVE DETAIL

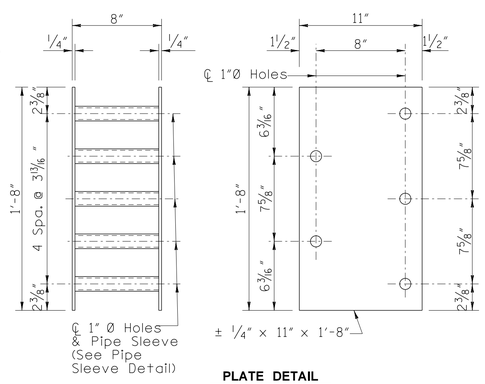

PLATE DETAIL

GUARDRAIL ANCHOR ASSEMBLY

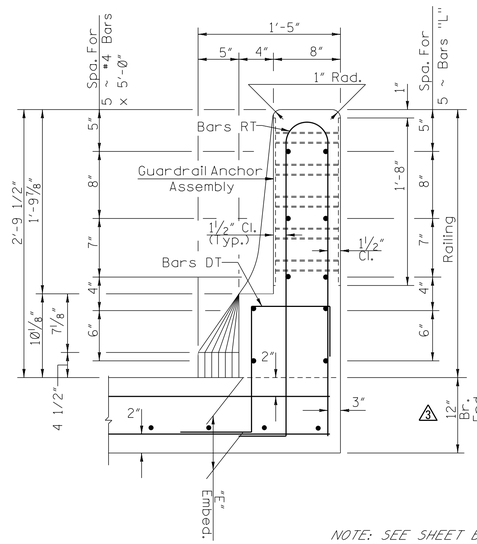

END ELEVATION OF RAILING

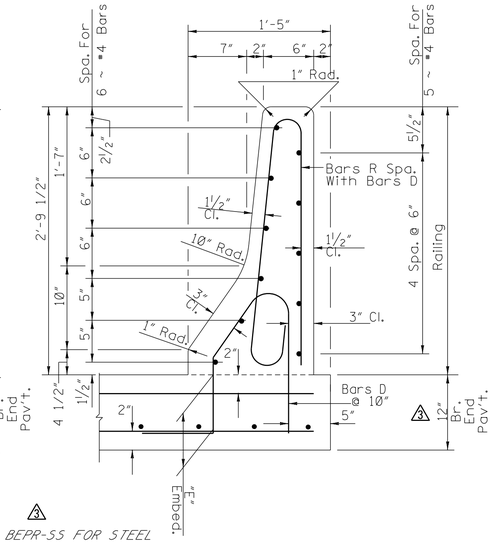

NOTE: SEE SHEET BEPR-SS FOR STEEL DETAILS OF BRIDGE END PAVEMENT

TYPICAL SECTION OF RAILING

NOTE: "E" = Slab Thickness (In.) - 2 Inch.

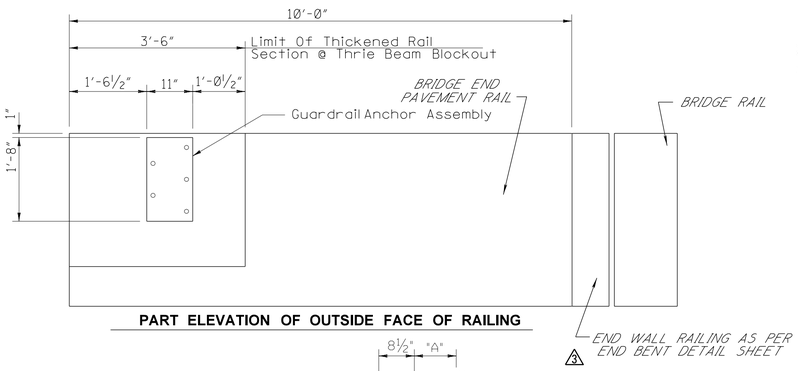

PART ELEVATION OF OUTSIDE FACE OF RAILING

TYPICAL SECTION OF RAILING

Showing Optional Welded Wire Fabric

CONSTRUCTION NOTES:

Fabricate Guardrail Anchor Assemblies By Tack Welding Each End Of Pipe Sleeves To Plates. Plates Shall Be ASTM A 36 Steel. Pipes Shall Be ASTM A 120. Galvanize Complete Assemblies After Fabrication Per ASTM A 153.

Attach Assemblies Securely To Forms Prior To Pouring Railing Concrete To Assure That Exposed Surfaces Of The Assemblies Will Be Flush With Concrete Surfaces.

GUARDRAIL ANCHOR ASSEMBLIES SHALL BE INSTALLED IN BOTH LEFT AND RIGHT RAILINGS AT EACH END OF ALL BRIDGES.

Welded Wire Fabric Meeting The Requirements Of ASTM A 497 And Details Shown On This Sheet May Be Used As An Option To Conventional Railing Reinforcing. Longitudinal Wires Shall Be D8 Spaced As Shown In The BAR BENDING DETAILS And Vertical Wires Shall Be D8 Spaced At 4".

Welded Wire Fabric Shall Not Be Used In The 2'-9" Thrie Beam Blockout Reinforcement For The 2'-9" Thrie Beam Blockout Shall Consist Of Conventional Reinforcing As Shown In Details On This Sheet. The Longitudinal Bars Of The Conventional Reinforcing Shall Extend Beyond The 2'-9" Thrie Beam Blockout Into The Welded Wire Fabric A Minimum Distance Of 1'-6".

Bridge End Pavement Rail Shall Be Constructed And Paid For In Accordance With Section 813 Of The Standard Specifications.

4" Diameter weep hole to be placed in bridge end pavement rail where required to reduce ponding.

IF TOP LIFT IS ANYTHING OTHER THAN 1.5", THE LIFT SHALL BE TRANSITIONED TO 1.5" ACROSS THE LENGTH OF THE BRIDGE END SLAB.

DESIGN DATA

Specifications.....A.A.S.H.T.O. 1992 & Int. Thru 1995
Concrete.....Class "AA"(4,000 psi)
Reinforcing.....ASTM A 615 Grade 60 (Fy = 60 ksi)

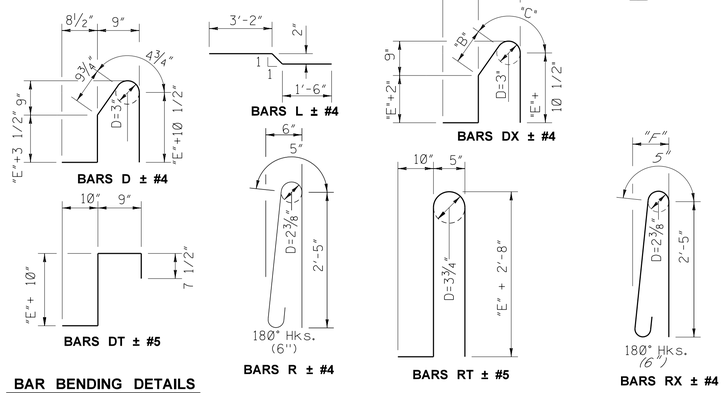

BAR BENDING DETAILS

Dimensions Are Out To Out NOTE:
"E" = Slab Thickness (In.) - 2 Inch.

SKEW (DEG)	BARS DX ~ #4			BARS RX ~ #4
	"A"	"B"	"C"	"F"
0	9"	9¾"	5"	6"
5	9"	9¾"	5"	6"
10	9"	9¾"	5"	6"
15	9¼"	10"	5"	6¼"
20	9½"	10"	5"	6¼"
25	10"	10½"	5"	6½"
30	10¼"	10½"	5"	7"
35	11"	11¼"	4¾"	7¼"
40	11¾"	11¾"	4¾"	7¾"
45	1'-0¼"	1'-0¾"	4½"	8½"
50	1'-2"	1'-1¾"	4½"	9¼"
55	1'-3¾"	1'-2½"	4½"	10½"

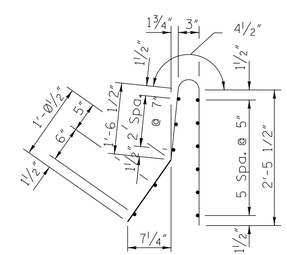

WELDED WIRE FABRIC

(Optional - See CONSTRUCTION NOTES)

DATE	REVISION	BY
2-12-15	REV. NOTES AND DETAILS	MRD

MISSISSIPPI DEPARTMENT OF TRANSPORTATION

33.5" BRIDGE END PAVEMENT RAIL

PRELIMINARY NOT FOR CONSTRUCTION

COUNTY:
PROJ. NUM.:

WORKING NUMBER BEPR-1B

FILENAME: BRENDPAVERAIL_33-5.DGN
DESIGN TEAM ____ CHECKED ____ DATE ____

SHEET NUMBER 3

PLAN
ROADWAY DESIGN DIVISION
MISSISSIPPI DEPARTMENT OF TRANSPORTATION

3/17/2015 7:56 AM BRENDPAVERAIL_33-5_12-INCH.DGN