| STATE | PROJECT NO. |
|---|---|
| MISS. | |

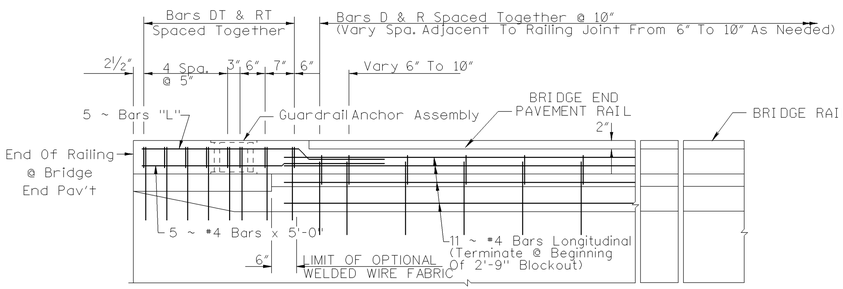


**PART PLAN OF LEFT RAILING**

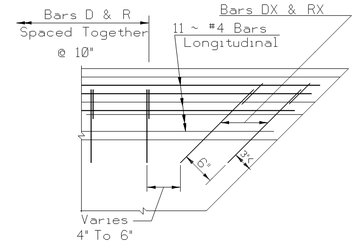


**SKEWED PART PLAN OF LEFT RAILING AT BRIDGE END WALL**

(Showing Conventional Reinforcing. See CONSTRUCTION NOTES For Details Of Optional Welded Wire Fabric.)

(Showing Conventional Reinforcing. See CONSTRUCTION NOTES For Details Of Optional Welded Wire Fabric.)

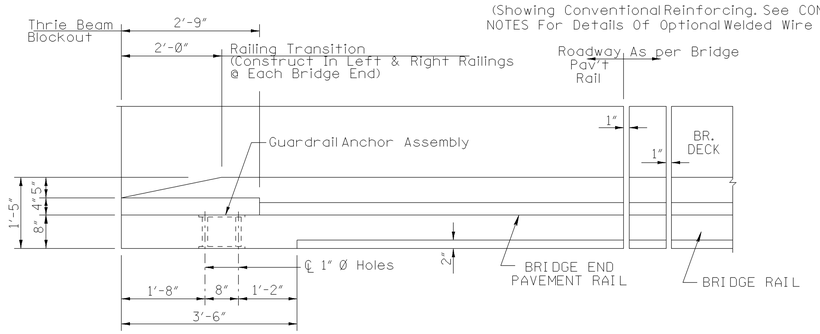


**PART PLAN OF RIGHT RAILING**

(Showing Concrete Dimensions)

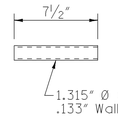


**PIPE SLEEVE DETAIL**

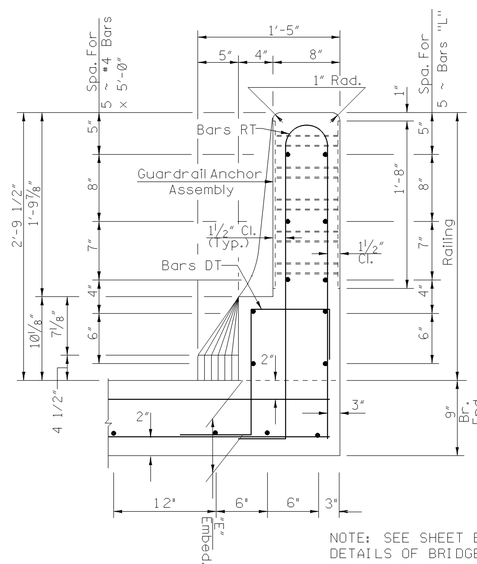


**END ELEVATION OF RAILING**

NOTE: SEE SHEET BE-1 FOR STEEL DETAILS OF BRIDGE END PAVEMENT

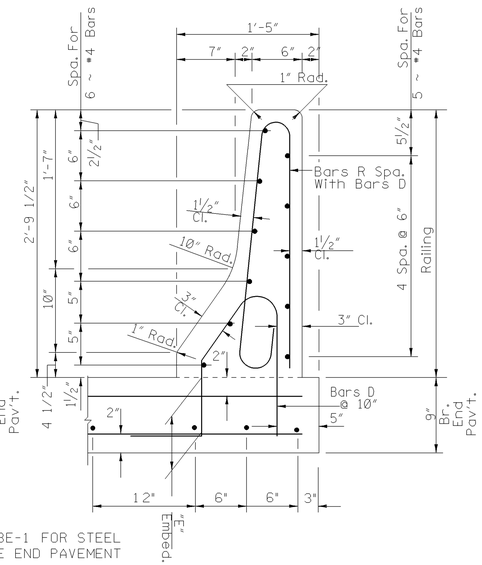


**TYPICAL SECTION OF RAILING**

NOTE: "E" = Slab Thickness (In.) - 1 Inch.

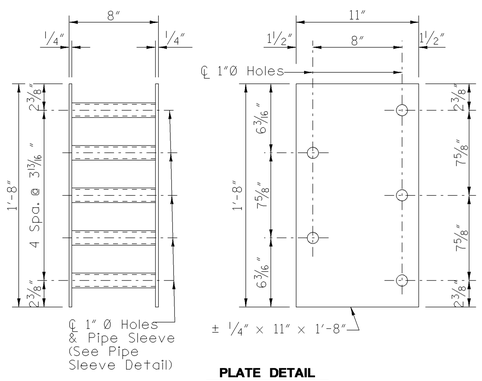


**PLATE DETAIL**

**GUARDRAIL ANCHOR ASSEMBLY**

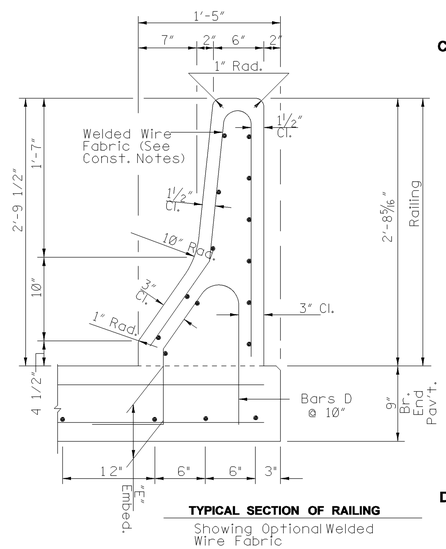


**TYPICAL SECTION OF RAILING**

Showing Optional Welded Wire Fabric

**CONSTRUCTION NOTES:**

Fabricate Guardrail Anchor Assemblies By Tack Welding Each End Of Pipe Sleeves To Plates. Plates Shall Be ASTM A 36 Steel. Pipes Shall Be ASTM A 120. Galvanize Complete Assemblies After Fabrication Per ASTM A 153.

Attach Assemblies Securely To Forms Prior To Pouring Railing Concrete To Assure That Exposed Surfaces Of The Assemblies Will Be Flush With Concrete Surfaces.

GUARDRAIL ANCHOR ASSEMBLIES SHALL BE INSTALLED IN BOTH LEFT AND RIGHT RAILINGS AT EACH END OF ALL BRIDGES.

Welded Wire Fabric Meeting The Requirements Of ASTM A 497 And Details Shown On This Sheet May Be Used As An Option To Conventional Railing Reinforcing. Longitudinal Wires Shall Be D8 Spaced As Shown In The BAR BENDING DETAILS And Vertical Wires Shall Be D8 Spaced At 4".

Welded Wire Fabric Shall Not Be Used In The 2'-9" Thrie Beam Blockout Reinforcement For The 2'-9" Thrie Beam Blockout Shall Consist Of Conventional Reinforcing As Shown In Details On This Sheet. The Longitudinal Bars Of The Conventional Reinforcing Shall Extend Beyond The 2'-9" Thrie Beam Blockout Into The Welded Wire Fabric A Minimum Distance Of 1'-6".

Bridge End Pavement Rail Shall Be Constructed And Paid For In Accordance With Section 813 Of The Standard Specifications.

4" DIAMETER WEEP HOLE TO BE PLACED IN BRIDGE END PAVEMENT RAIL WHERE REQUIRED TO REDUCE PONDING.

IF TOP LIFT IS ANYTHING OTHER THAN 1.5", THE LIFT SHALL BE TRANSITIONED TO 1.5" ACROSS THE LENGTH OF THE BRIDGE END SLAB.

**DESIGN DATA**

Specifications.....A.A.S.H.T.O. 1992 & Int. Thru 1995
Concrete.....Class "AA"(4,000 psi)
Reinforcing.....ASTM A 615 Grade 60 (Fy = 60 ksi)

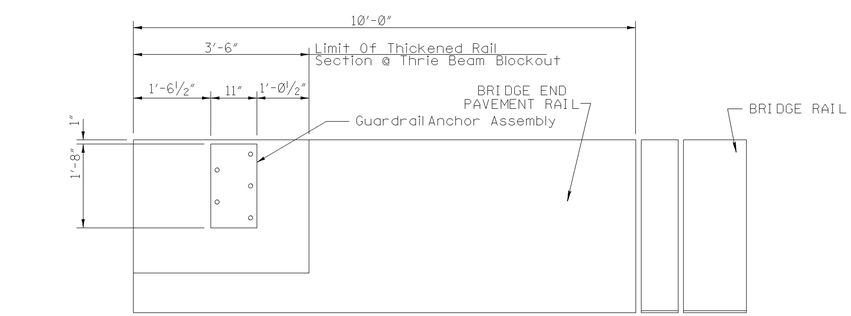


**PART ELEVATION OF OUTSIDE FACE OF RAILING**

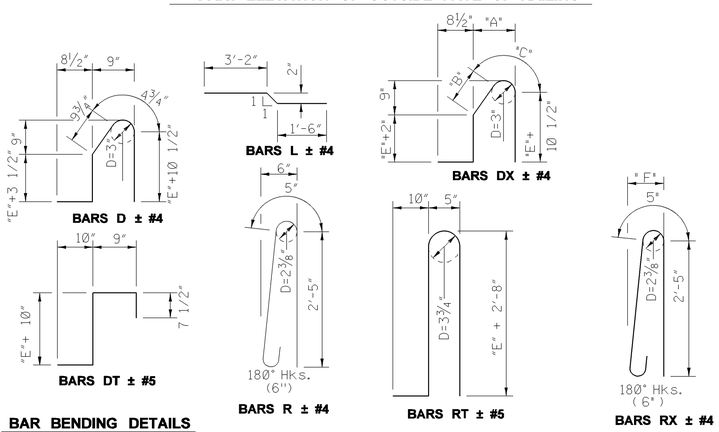


**BAR BENDING DETAILS**

Dimensions Are Out To Out NOTE:
"E" = Slab Thickness (In.) - 1 Inch.

| SKEW (DEG) | BARS DX ~ #4 | | | BARS RX ~ #4 |
|---|---|---|---|---|
| | "A" | "B" | "C" | "F" |
| 0 | 9" | 9¾" | 5" | 6" |
| 5 | 9" | 9¾" | 5" | 6" |
| 10 | 9" | 9¾" | 5" | 6" |
| 15 | 9¼" | 10" | 5" | 6¼" |
| 20 | 9½" | 10" | 5" | 6¼" |
| 25 | 10" | 10½" | 5" | 6½" |
| 30 | 10¼" | 10½" | 5" | 7" |
| 35 | 11" | 11¼" | 4¾" | 7¼" |
| 40 | 11¾" | 11¾" | 4¾" | 7¾" |
| 45 | 1'-0¼" | 1'-0¾" | 4½" | 8½" |
| 50 | 1'-2" | 1'-1¾" | 4½" | 9¼" |
| 55 | 1'-3¾" | 1'-2½" | 4½" | 10½" |

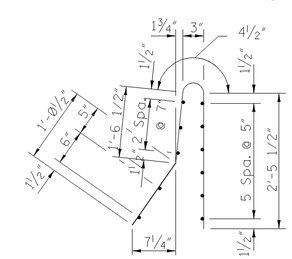


**WELDED WIRE FABRIC**

(Optional - See CONSTRUCTION NOTES)

| DATE | REVISION | BY |
|---|---|---|
| | | |

**MISSISSIPPI DEPARTMENT OF TRANSPORTATION**

# 33.5" BRIDGE END PAVEMENT RAIL

WORKING NUMBER BE-PR-1B

SHEET NUMBER

FILENAME: BE-PR-1B.dgn

DESIGN TEAM spell CHECKED reeves DATE 03-17-10

PLAN
ROADWAY DESIGN DIVISION
MISSISSIPPI DEPARTMENT OF TRANSPORTATION

4/12/2010 1:20 PM BE-PR-1B.DGN