Melinda L. McGrath
Interim Executive Director/
Chief Engineer

Jackie Duckworth
Deputy Executive Director/
Administration

MDOT
MISSISSIPPI DEPARTMENT OF TRANSPORTATION

Charles R. Carr
Director
Office of Intermodal Planning

Willie Huff
Director
Office of Enforcement

P. O. Box 1850 / Jackson, Mississippi 39215-1850 / Telephone (601) 359-7001 / FAX (601) 359-7110 / www.GoMDOT.com

Inter-Departmental Memorandum

Date: May 24, 2011

To: Design Teams

From: John M. Reese
Roadway Design Division Engineer

Subject: Safety Edge

Attached is the approved policy for using the Safety Edge treatment on asphalt pavement. The safety edge will be included on all future projects that include asphalt pavement. Appropriate Microstation cells will be added to the cell library in the near future. Please add the cells as needed to the typical section sheets. The cell should be placed on the typical section sheet near the angle of repose cell. If a project has already been printed for first order printing, an revision is not necessary.

pc: Roadway Design Section Engineers
Roadway Design Division (Sutterfield)
Roadway Design Division (Boteler)
Assistant Roadway Design Division Engineer (Mood)
District Engineers
Assistant Chief Engineer, Pre-Construction
Active Consultants
file

Melinda L. McGrath
Interim Executive Director/
Chief Engineer

Jackie Duckworth
Deputy Executive Director/
Administration

MDOT
MISSISSIPPI DEPARTMENT OF TRANSPORTATION

Charles R. Carr
Director
Office of Intermodal Planning

Willie Huff
Director
Office of Enforcement

EMT
ADA
SEC
CR
STR
FMT
FS
FA
PDT
ENV
PLN
ROW
EOT
A1
A2
A3
A4
PCT
ITS
CS
M & F
SFTY

P. O. Box 1850 / Jackson, Mississippi 39215-1850 / Telephone (601) 359-7249 / FAX (601) 359-7050 / www.GoMDOT.com

May 9, 2011

Mr. Andy Hughes
Division Administrator
Federal Highway Administration
100 W. Capitol St., Suite 1062
Jackson, MS 39269

RE: Safety Edge

Dear Mr. Hughes:

Attached for your review and approval is MDOT's revised policy for using Safety Edge on future construction projects.

Safety Edge will be included in all applicable projects beginning with the January 2011 letting.

If any additional information is needed, please advise.

Sincerely,

Melinda L. McGrath, PE
Interim Executive Director/Chief Engineer

Attachment

MLM/MCM:/jmr

pc: Asst. Chief Engineers
Roadway Design Division Engineer
Construction Engineer

APPROVED
5/13/11
DATE
FOR THE DIVISION ADMINISTRATOR
FEDERAL HIGHWAY ADMINISTRATION

Safety Edge Policy

Beginning with the January 2011 letting, all applicable MDOT construction projects will include details for the Safety Edge pavement edge treatment.

Excluding curb and gutter sections, where two lifts or less of asphalt pavement will be constructed, the Safety Edge will be constructed on all lifts of newly placed pavement.

Excluding curb and gutter sections, where three lifts or more of asphalt pavement will be constructed, the Safety Edge will be constructed only on the top two lifts of newly placed pavement.

On roadways with narrow travel way and/or narrow shoulders, it is preferred that a minimum of 1 foot trench widening be added prior to adding the safety edge. However, if conditions prevent adding the trench widening, add the safety edge on top of the gravel shoulder.

The cost of the Safety Edge is to be absorbed in the cost of asphalt. There will not be a separate pay item.

The attached detail will be shown on all applicable Typical Sections sheets in the plans.

Plans that have already been printed for the first order printing will not be revised to include details. The Safety Edge will be included on those projects in the proposal.

On "proposal only" projects that have no plans, the Safety Edge will be included in the proposal.

The Safety Edge will be constructed on all edges of pavement, including full-width paved shoulders.

The Safety Edge will not be constructed on the centerline where there is a temporary drop-off during paving operations.

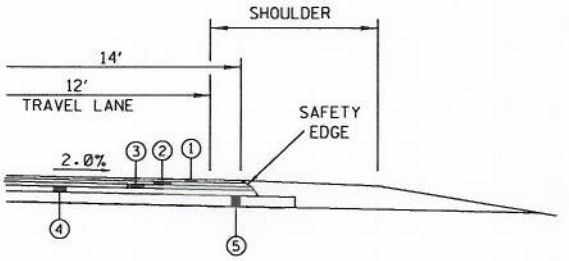

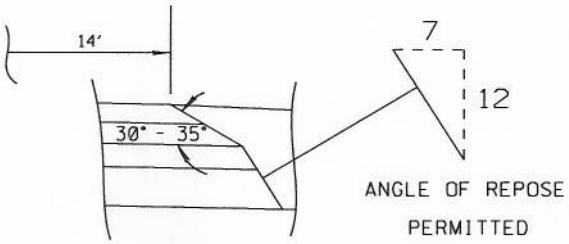

SAFETY EDGE REQ'D
TOP 2 LIFTS ONLY
(NOT A PAY ITEM)

NEW CONSTRUCTION

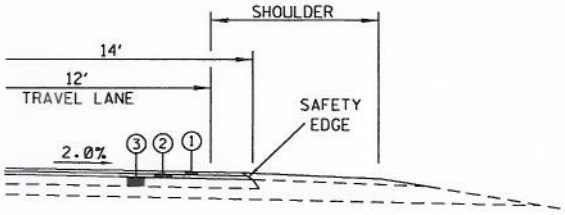

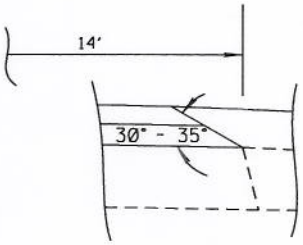

SAFETY EDGE REQ'D
TOP 2 LIFTS ONLY
(NOT A PAY ITEM)

OVERLAY 14' PAVEMENT

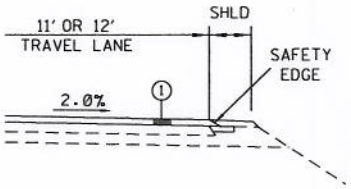

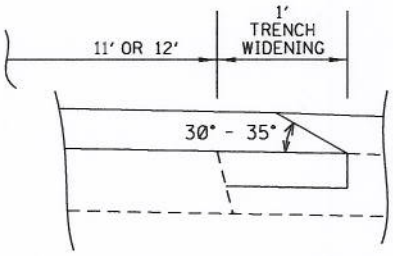

SAFETY EDGE REQ'D
(NOT A PAY ITEM)

OVERLAY 11' OR 12' PAVEMENT WITH TRENCH WIDENING

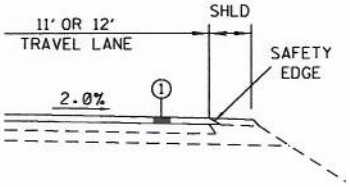

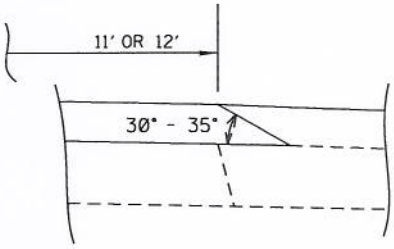

SAFETY EDGE REQ'D
(NOT A PAY ITEM)

OVERLAY 11' OR 12' PAVEMENT WITHOUT TRENCH WIDENING

SAFETY EDGE DETAILS **4/26/2011**

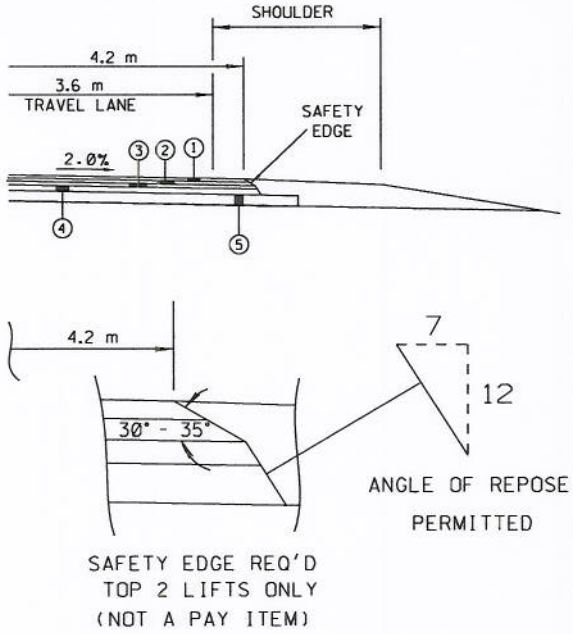

NEW CONSTRUCTION

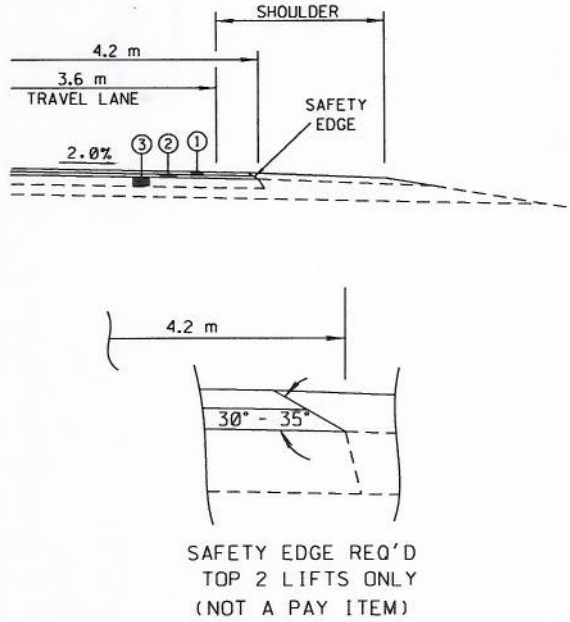

OVERLAY
4.2 m PAVEMENT

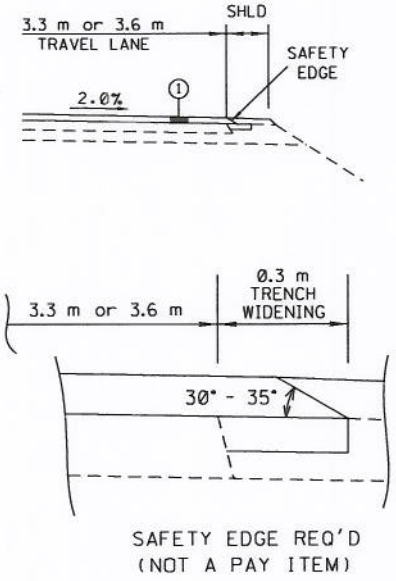

OVERLAY
3.3 m or 3.6 m PAVEMENT WITH TRENCH WIDENING

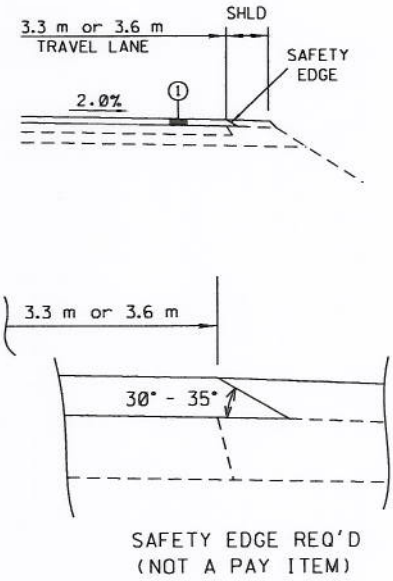

OVERLAY
3.3 m or 3.6 m PAVEMENT WITHOUT TRENCH WIDENING

SAFETY EDGE DETAILS **4/26/2011**