STATE	PROJECT NO.
MISS.	

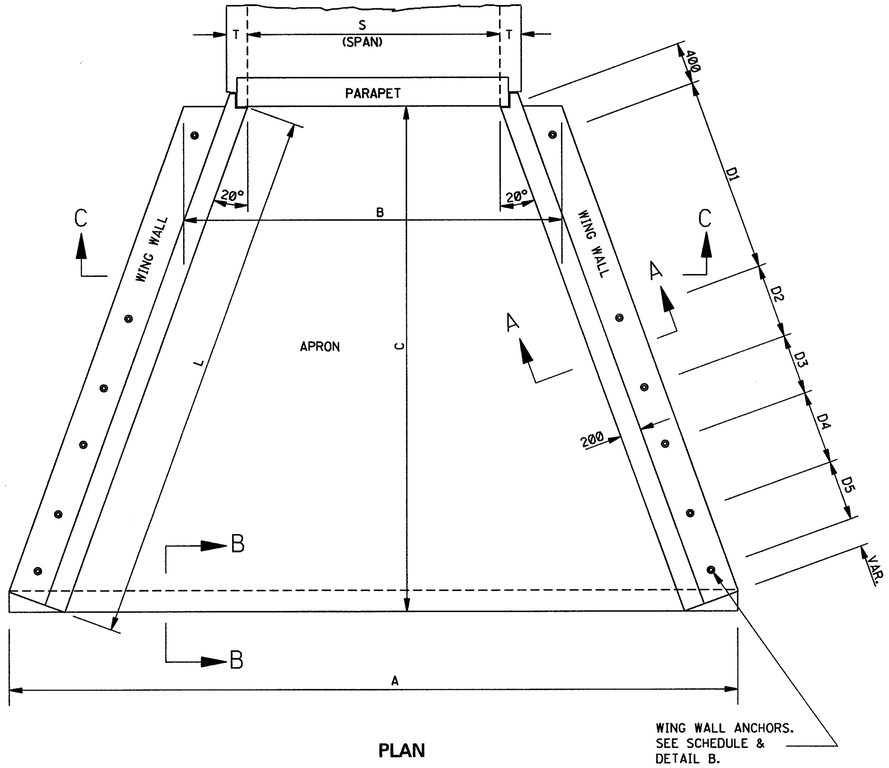

PLAN

TABLE OF DIMENSIONS																							
SPAN S	RISE R	WALL THICKNESS T	APRON WIDTH A	APRON WIDTH B	APRON LENGTH C	MASS (METRIC TONS)			WING HEIGHT H	WING LENGTH L	WING HEIGHT W	MASS (METRIC TONS)	WING WALL ANCHORS					REINFORCING STEEL*					
						INSIDE APRON	MIDDLE APRON	TOE WALL APRON					D1	D2	D3	D4	D5	S1	S2	S3	S4	S5	S6
1200	600	NOT AVAILABLE																					
1200	1200	NOT AVAILABLE																					
1800	1200	200	4580	2975	2400	-	-	4.9	1400	2500	550	1.6	1850	-	-	-	-	220	220	220	220	220	220
2400	1200	200	5180	3575	2400	-	-	5.6	1400	2500	550	1.6	1850	-	-	-	-	220	220	220	220	220	220
3000	1200	250	5780	4175	2400	-	-	6.3	1400	2500	550	1.6	1850	-	-	-	-	220	220	220	220	220	220
1800	1500	200	4580	2975	2400	-	-	4.9	1700	2500	850	2.0	1850	-	-	-	-	260	220	220	220	220	220
2400	1500	200	5180	3575	2400	-	-	5.6	1700	2500	850	2.0	1850	-	-	-	-	260	220	220	220	220	220
3000	1500	250	5780	4175	2400	-	-	6.3	1700	2500	850	2.0	1850	-	-	-	-	260	220	220	220	220	220
1800	1800	200	5450	2975	3600	4.4	-	3.5	2000	3775	725	3.1	1850	700	575	-	-	430	220	220	220	220	220
2400	1800	200	6050	3575	3600	5.1	-	3.9	2000	3775	725	3.1	1850	700	575	-	-	430	220	220	220	220	220
3000	1800	250	6650	4175	3600	5.8	-	4.3	2000	3775	725	3.1	1850	700	575	-	-	430	220	220	220	220	220
2400	2400	200	6925	3575	4800	5.1	3.3	4.5	2600	5075	900	5.1	1850	700	575	700	575	960	220	220	220	220	220
3000	2400	250	7525	4175	4800	5.8	3.6	4.8	2600	5075	900	5.1	1850	700	575	700	575	960	220	220	220	220	220

*REINFORCING STEEL SCHEDULE - SQUARE MILLIMETERS OF STEEL PER METER OF WING.

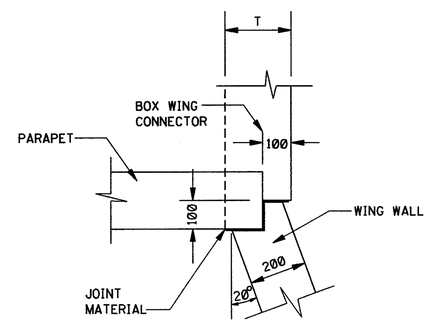

DETAIL A

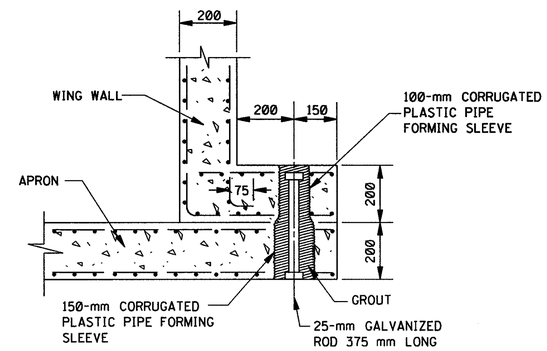

DETAIL B

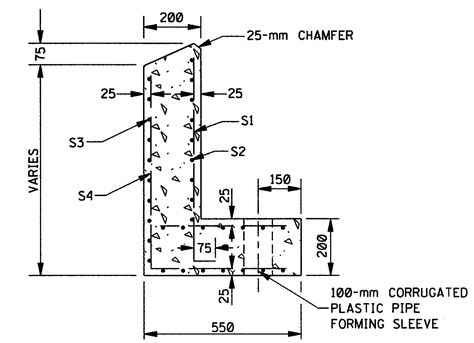

WING WALL
SECTION A–A

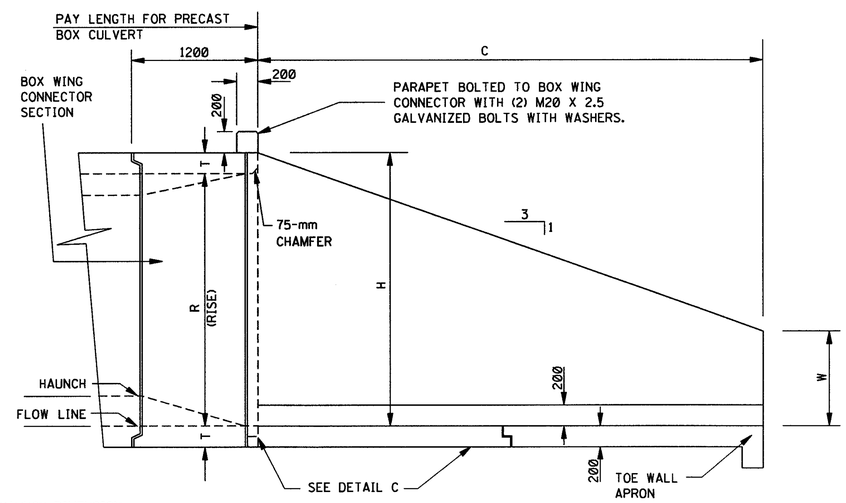

SIDE ELEVATION

HAUNCH DIMENSION:
200 mm FOR 200-mm WALL THICKNESS.
250 mm FOR 250-mm WALL THICKNESS.

APRONS: FOR 1200-mm & 1500-mm RISE (ONE APRON UNIT REQUIRED): TOE WALL APRON LENGTH = 2400 mm; INSIDE APRON UNIT NOT REQUIRED.
FOR 1800-mm RISE (TWO APRON UNITS REQUIRED): INSIDE APRON LENGTH = 2400 mm; TOE WALL APRON LENGTH = 1200 mm.
FOR 2400-mm RISE (THREE APRON UNITS REQUIRED): INSIDE APRON LENGTH = 2400 mm; MIDDLE APRON LENGTH = 1200 mm); TOE WALL APRON LENGTH = 1200 mm.

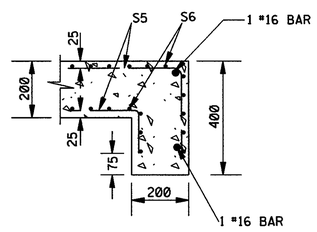

TOE WALL
SECTION B–B

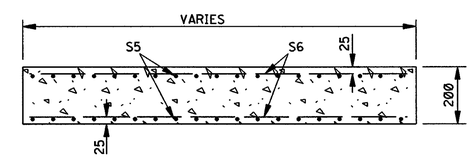

APRON
SECTION C–C

GENERAL NOTES:

1. THE BOX WING CONNECTOR SECTION SHALL MEET THE DESIGN REQUIREMENT OF THE PRECAST CONCRETE BOX CULVERT TO WHICH IT IS ATTACHED. SEE SHEET PBC-1 FOR BOX CULVERT DETAILS.
2. CONCRETE DESIGN STRENGTH: 35 MPa
3. REINFORCED STEEL: 520 MPa YIELD STRENGTH.
4. GALVANIZATION FOR REQUIRED HARDWARE SHALL MEET THE REQUIREMENTS OF AASHTO M 111.

ALL DIMENSIONS ARE IN MILLIMETERS (mm) EXCEPT WHERE NOTED.

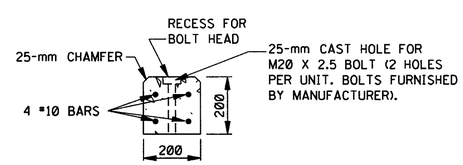

PARAPET DETAIL

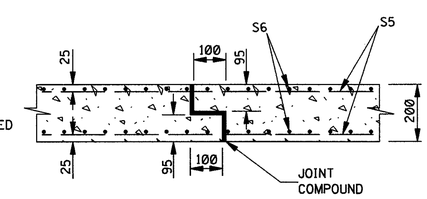

TYPICAL APRON JOINT
DETAIL C

DATE	REVISION	BY

MISSISSIPPI DEPARTMENT OF TRANSPORTATION
ROADWAY DESIGN DIVISION
STANDARD PLAN

PRECAST CONCRETE BOX CULVERT END SECTIONS

DEPARTMENT OF TRANSPORTATION METRIC MISSISSIPPI

WORKING NUMBER PBC-2

ISSUE DATE: OCTOBER 1, 1998

SHEET NUMBER 354