STATE	PROJECT NO.
MISS.	

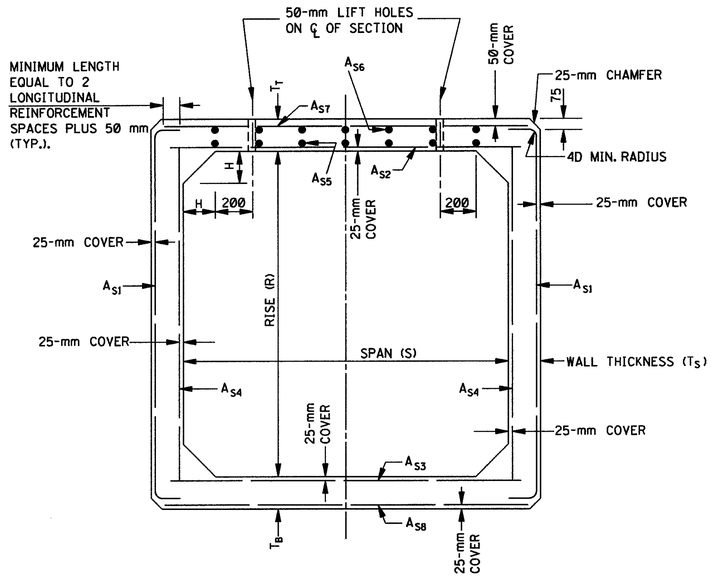

SECTION A–A

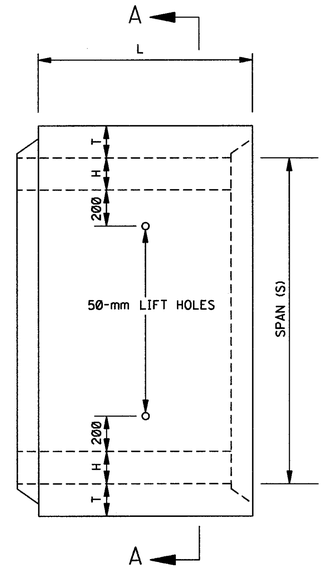

PLAN

ASTM C 850M (AASHTO M 273M) DESIGN FOR LESS THAN 600–mm OF COVER

	SPAN (mm)	RISE (mm)	COVER EQUAL TO OR LESS THAN 600 mm ASTM C 850M DESIGN (AASHTO M 273M) TABLE 1			COVER OF 600 mm TO MAXIMUM AS SHOWN ASTM C 789M DESIGN (AASHTO M 259M) TABLE 1	
			MINIMUM THICKNESS (mm)			TOP, BOTTOM & WALL THICKNESS (T) (mm)	MAXIMUM FILL HEIGHT TO TOP OF BOX (mm)
			TOP SLAB (T_T)	BOTTOM SLAB (T_B)	WALL (T_S)		
	1200	600	190	150	125	125	5500
	1800	1200	200	175	175	175	5500
	2400	1200	200	200	200	200	4300
*	3000	1200	250	250	250	250	1500
	1800	1500	200	175	175	175	5500
	2400	1500	200	200	200	200	3700
	3000	1500	250	250	250	250	4300
	1800	1800	200	175	175	175	5500
	2400	1800	200	200	200	200	3700
	3000	1800	250	250	250	250	4300
	2400	2400	200	200	200	200	3700
	3000	2400	250	250	250	250	3700

* NOTE: SPECIAL DESIGN (SEE NOTE 3).

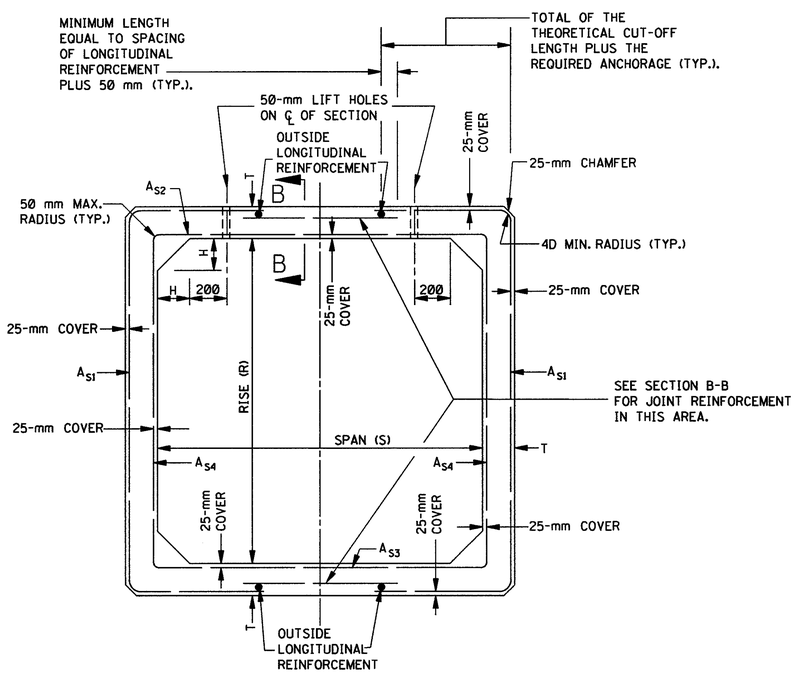

SECTION A–A

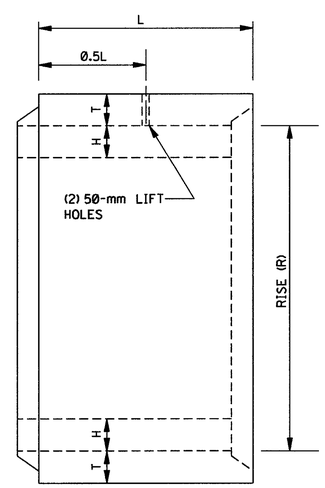

ELEVATION

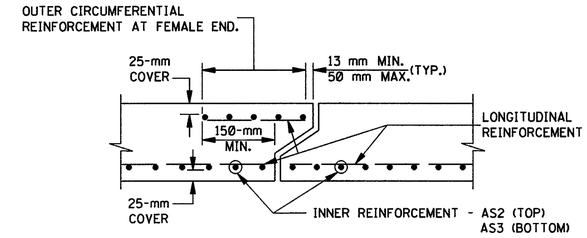

SECTION B–B

NOTE: TOP SLAB REINFORCEMENT SHOWN.
BOTTOM SLAB REINFORCEMENT SIMILAR.

ASTM C 789M (AASHTO M 259M) DESIGN FOR 600–mm OR MORE COVER

GENERAL NOTES:

1. THE PRECAST REINFORCED CONCRETE BOX SECTION, EXCLUDING SPECIAL DESIGNS, SHALL BE DESIGNED AND MANUFACTURED IN ACCORDANCE WITH THE SPECIFICATION OF ASTM C 850M (AASHTO M 273M) (TABLE 1) FOR LESS THAN 600 mm OF COVER SUBJECTED TO HIGHWAY LOADING OR ASTM C 789M (AASHTO M 259M) (TABLE 1) FOR 600 mm OR MORE EARTH COVER.
2. THE HAUNCH DIMENSION ("H") IS EQUAL TO THE WALL THICKNESS.
3. CONCRETE BOXES THAT ARE INDICATED AS SPECIAL DESIGNS HAVE BEEN APPROVED AND ARE ON FILE AT THE ROADWAY DESIGN AND MATERIALS DIVISION OF THE MISSISSIPPI DEPARTMENT OF TRANSPORTATION, AND SHALL BE MANUFACTURED IN ACCORDANCE WITH THE SPECIFICATIONS OF ASTM C 850M (AASHTO M 273M) (TABLE 1) FOR LESS THAN 600 mm OF COVER SUBJECTED TO HIGHWAY LOADING OR ASTM C 789M (AASHTO M 259M) (TABLE 1) FOR 600 mm OR MORE EARTH COVER.

ALL DIMENSIONS ARE IN MILLIMETERS (mm) EXCEPT WHERE NOTED.

DATE	REVISION	BY

MISSISSIPPI DEPARTMENT OF TRANSPORTATION
ROADWAY DESIGN DIVISION
STANDARD PLAN

PRECAST CONCRETE BOX CULVERT

METRIC

WORKING NUMBER PBC-1

ISSUE DATE: OCTOBER 1, 1998

SHEET NUMBER 353