DIMENSIONS AND REINFORCING FOR FLARED HEADWALL FOR SINGLE LINE PIPE CULVERT

EQUAL PIPE SIZE	G	X	Y	A NO	A LGTH	B NO	B LGTH	C NO	C LGTH	D NO	D LGTH
450	1145	1880	880	4	2155	5	1845	2	750	2	675
600	1335	2440	1070	4	2525	6	2355	2	925	2	750
750	1535	2795	1270	4	2830	6	2570	2	1025	2	825
900	1765	3255	1505	4	3185	7	2880	2	1150	2	900
1050	1965	3710	1705	4	3525	8	3230	2	1300	2	1025
1200	2180	4205	1915	4	3885	8	3620	2	1450	2	1150
1350	2375	4640	2115	4	4210	9	3945	2	1575	2	1275
1500	2595	5145	2330	4	4580	10	4345	2	1725	2	1400
1800	3005	6070	2745	4	5265	11	5045	2	2000	2	1575

EQUAL PIPE SIZE	J1 NO	J1 LGTH	J2 NO	J2 LGTH	J3 NO	J3 LGTH	J4 NO	J4 LGTH	J5 NO	J5 LGTH	J6 NO	J6 LGTH	J7 NO	J7 LGTH	J8 NO	J8 LGTH
450	1	1150	1	1375	1	1600	1	1800	1	2025						
600	1	1350	1	1575	1	1800	1	2000	1	2225	1	2450				
750	1	1550	1	1775	1	2000	1	2200	1	2425	1	2650	1	2875		
900	1	1775	1	2000	1	2225	1	2425	1	2650	1	2875	1	3100	1	3300
1050	1	1975	1	2200	1	2425	1	2625	1	2850	1	3075	1	3300	1	3500
1200	1	2200	1	2425	1	2650	1	2850	1	3075	1	3300	1	3525	1	3725
1350	1	2375	1	2600	1	2825	1	3025	1	3250	1	3475	1	3700	1	3900
1500	1	2600	1	2825	1	3050	1	3250	1	3475	1	3700	1	3925	1	4125
1800	1	3025	1	3250	1	3475	1	3675	1	3900	1	4125	1	4350	1	4550

EQUAL PIPE SIZE	J9 NO	J9 LGTH	J10 NO	J10 LGTH	J11 NO	J11 LGTH	J12 NO	J12 LGTH	J13 NO	J13 LGTH	J14 NO	J14 LGTH	J15 NO	J15 LGTH
450														
600														
750														
900														
1050	1	3725												
1200	1	3950	1	4175										
1350	1	4125	1	4350	1	4575	1	4800						
1500	1	4350	1	4575	1	4800	1	5000	1	5225				
1800	1	4775	1	5000	1	5225	1	5425	1	5650	1	5875	1	6100

EQUAL PIPE SIZE	U NO	U LGTH	W1 NO	W1 LGTH	W2 NO	W2 LGTH	W3 NO	W3 LGTH	W4 NO	W4 LGTH	W5 NO	W5 LGTH	W6 NO	W6 LGTH	W7 NO	W7 LGTH	W8 NO	W8 LGTH	W9 NO	W9 LGTH
450	4	1325	4	825	4	650	4	525												
600	4	1875	4	1125	4	900	4	700	4	550										
750	4	2075	4	1325	4	1100	4	850	4	650	2	575								
900	4	2425	4	1525	4	1325	4	1075	4	825	4	700								
1050	4	2800	4	1775	4	1550	4	1300	4	1075	4	850	2	800						
1200	4	3225	4	2025	4	1775	4	1550	4	1300	4	1075	4	850						
1350	4	3550	4	2275	4	2025	4	1775	4	1525	4	1275	4	1050	4	975				
1500	4	3975	4	2550	4	2300	4	2050	4	1825	4	1575	4	1300	4	1075	2	1050		
1800	4	4725	4	3025	4	2800	4	2550	4	2300	4	2050	4	1800	4	1575	4	1325	2	1250

EQUAL PIPE SIZE	Y1 NO	Y1 LGTH	Y2 NO	Y2 LGTH	Y3 NO	Y3 LGTH	Y4 NO	Y4 LGTH	Y5 NO	Y5 LGTH	Y6 NO	Y6 LGTH	PAY QUANTITIES FOR ONE HEADWALL CONCRETE (m^3)	STEEL (kg)
450	2	975	2	1550									0.66	46
600	2	975	2	2075									1.02	65
750	2	975	2	2225	2	2300							1.26	81
900	2	975	2	2225	2	2625							1.62	100
1050	2	975	2	2225	2	3025							2.03	121
1200	2	975	2	2225	2	3425	2	3425					2.54	148
1350	2	975	2	2225	2	3500	2	3775					3.03	179
1500	2	975	2	2225	2	3500	2	4200	2	4200			3.67	217
1800	2	975	2	2225	2	3500	2	4775	2	4950	2	4950	4.96	284

DIMENSIONS AND REINFORCING FOR FLARED HEADWALL FOR DOUBLE LINE PIPE CULVERT

EQUAL PIPE SIZE	G	X	Y	Z	A NO	A LGTH	B NO	B LGTH	C NO	C LGTH	D NO	D LGTH
450	2125	2860	1865	300	4	3135	8	1845	3	750	4	675
600	2505	3615	2245	300	4	3695	9	2355	3	925	4	750
750	2905	4170	2645	300	4	4200	11	2570	3	1025	4	825
900	3445	4935	3180	375	4	4865	13	2880	4	1150	4	900
1050	3845	5590	3580	375	4	5405	14	3230	4	1300	4	1025
1200	4345	6370	4080	450	4	6050	16	3620	4	1450	4	1150
1350	4815	7075	4550	525	4	6650	17	3945	4	1575	4	1275
1500	5325	7880	5065	600	4	7310	19	4345	4	1725	4	1400
1800	6225	9290	5965	675	4	8485	22	5045	5	2000	4	1575

EQUAL PIPE SIZE	J1 NO	J1 LGTH	J2 NO	J2 LGTH	J3 NO	J3 LGTH	J4 NO	J4 LGTH	J5 NO	J5 LGTH	J6 NO	J6 LGTH	J7 NO	J7 LGTH	J8 NO	J8 LGTH
450	1	2125	1	2350	1	2575	1	2775	1	3000						
600	1	2525	1	2750	1	2975	1	3175	1	3400	1	3625				
750	1	2925	1	3150	1	3375	1	3575	1	3800	1	4025	1	4250		
900	1	3450	1	3675	1	3900	1	4100	1	4325	1	4550	1	4775	1	4975
1050	1	3850	1	4075	1	4300	1	4500	1	4725	1	4950	1	5175	1	5375
1200	1	4350	1	4575	1	4800	1	5000	1	5225	1	5450	1	5675	1	5875
1350	1	4825	1	5050	1	5275	1	5475	1	5700	1	5925	1	6150	1	6350
1500	1	5325	1	5550	1	5775	1	5975	1	6200	1	6425	1	6650	1	6850
1800	1	6225	1	6450	1	6675	1	6875	1	7100	1	7325	1	7550	1	7750

EQUAL PIPE SIZE	J9 NO	J9 LGTH	J10 NO	J10 LGTH	J11 NO	J11 LGTH	J12 NO	J12 LGTH	J13 NO	J13 LGTH	J14 NO	J14 LGTH	J15 NO	J15 LGTH
450														
600														
750														
900														
1050	1	5600												
1200	1	6100	1	6325										
1350	1	6575	1	6800	1	7025	1	7225						
1500	1	7075	1	7300	1	7525	1	7725	1	7950				
1800	1	7975	1	8200	1	8425	1	8625	1	8850	1	9075	1	9300

EQUAL PIPE SIZE	U NO	U LGTH	W1 NO	W1 LGTH	W2 NO	W2 LGTH	W3 NO	W3 LGTH	W4 NO	W4 LGTH	W5 NO	W5 LGTH	W6 NO	W6 LGTH	W7 NO	W7 LGTH	W8 NO	W8 LGTH	W9 NO	W9 LGTH
450	4	1325	4	825	4	650	4	525												
600	4	1875	4	1125	4	900	4	700	4	550										
750	4	2075	4	1325	4	1100	4	850	4	650	2	575								
900	4	2425	4	1525	4	1325	4	1075	4	825	4	700								
1050	4	2800	4	1775	4	1550	4	1300	4	1075	4	850	2	800						
1200	4	3225	4	2025	4	1775	4	1550	4	1300	4	1075	4	850						
1350	4	3550	4	2275	4	2025	4	1775	4	1525	4	1275	4	1050	4	975				
1500	4	3975	4	2550	4	2300	4	2050	4	1825	4	1575	4	1300	4	1075	2	1050		
1800	4	4725	4	3025	4	2800	4	2550	4	2300	4	2050	4	1800	4	1575	4	1325	2	1250

EQUAL PIPE SIZE	Y1 NO	Y1 LGTH	Y2 NO	Y2 LGTH	Y3 NO	Y3 LGTH	Y4 NO	Y4 LGTH	Y5 NO	Y5 LGTH	Y6 NO	Y6 LGTH	PAY QUANTITIES FOR ONE HEADWALL CONCRETE (m^3)	STEEL (kg)
450	2	975	2	1550									0.92	63
600	2	975	2	2075									1.47	86
750	2	975	2	2225	2	2300							1.83	112
900	2	975	2	2225	2	2625							2.39	141
1050	2	975	2	2225	2	3025							2.99	169
1200	2	975	2	2225	2	3425	2	3425					3.77	212
1350	2	975	2	2225	2	3500	2	3775					4.53	254
1500	2	975	2	2225	2	3500	2	4200	2	4200			5.50	308
1800	2	975	2	2225	2	3500	2	4775	2	4950	2	4950	7.44	409

DIMENSIONS AND REINFORCING FOR FLARED HEADWALL FOR TRIPLE LINE PIPE CULVERT

EQUAL PIPE SIZE	G	X	Y	Z	A NO	A LGTH	B NO	B LGTH	C NO	C LGTH	D NO	D LGTH
450	3105	3840	2845	300	4	4115	12	1845	4	750	6	675
600	3680	4785	3415	300	4	4870	13	2355	4	925	6	750
750	4220	5540	4015	300	4	5515	15	2570	4	1025	6	825
900	5120	6615	4860	375	4	6540	18	2880	6	1150	6	900
1050	5720	7465	5460	375	4	7280	20	3230	6	1300	6	1025
1200	6510	8535	6245	450	4	8215	23	3620	6	1450	6	1150
1350	7250	9515	6990	525	4	9085	25	3945	6	1575	6	1275
1500	8055	10610	7795	600	4	10040	28	4345	6	1725	6	1400
1800	9445	12505	9180	675	4	12005	33	5045	8	2000	6	1575

EQUAL PIPE SIZE	J1 NO	J1 LGTH	J2 NO	J2 LGTH	J3 NO	J3 LGTH	J4 NO	J4 LGTH	J5 NO	J5 LGTH	J6 NO	J6 LGTH	J7 NO	J7 LGTH	J8 NO	J8 LGTH
450	1	3125	1	3350	1	3575	1	3775	1	4000						
600	1	3700	1	3925	1	4150	1	4350	1	4575	1	4800				
750	1	4275	1	4500	1	4725	1	4925	1	5150	1	5375	1	5600		
900	1	5125	1	5350	1	5575	1	5775	1	6000	1	6225	1	6450	1	6650
1050	1	5725	1	5950	1	6175	1	6375	1	6600	1	6825	1	7050	1	7250
1200	1	6525	1	6750	1	6975	1	7175	1	7400	1	7625	1	7850	1	8050
1350	1	7250	1	7475	1	7700	1	7900	1	8125	1	8350	1	8575	1	8775
1500	1	8075	1	8300	1	8525	1	8725	1	8950	1	9175	1	9400	1	9600
1800	1	9450	1	9675	1	9900	1	10100	1	10325	1	10550	1	10775	1	10975

EQUAL PIPE SIZE	J9 NO	J9 LGTH	J10 NO	J10 LGTH	J11 NO	J11 LGTH	J12 NO	J12 LGTH	J13 NO	J13 LGTH	J14 NO	J14 LGTH	J15 NO	J15 LGTH
450														
600														
750														
900														
1050	1	7475												
1200	1	8275	1	8500										
1350	1	9000	1	9225	1	9450	1	9650						
1500	1	9825	1	10050	1	10275	1	10475	1	10700				
1800	1	11200	1	11425	1	11650	1	11850	1	12075	1	12300	1	12525

EQUAL PIPE SIZE	U NO	U LGTH	W1 NO	W1 LGTH	W2 NO	W2 LGTH	W3 NO	W3 LGTH	W4 NO	W4 LGTH	W5 NO	W5 LGTH	W6 NO	W6 LGTH	W7 NO	W7 LGTH	W8 NO	W8 LGTH	W9 NO	W9 LGTH
450	4	1325	4	825	4	650	4	525												
600	4	1875	4	1125	4	900	4	700	4	550										
750	4	2075	4	1325	4	1100	4	850	4	650	2	575								
900	4	2425	4	1525	4	1325	4	1075	4	825	4	700								
1050	4	2800	4	1775	4	1550	4	1300	4	1075	4	850	2	800						
1200	4	3225	4	2025	4	1775	4	1550	4	1300	4	1075	4	850						
1350	4	3550	4	2275	4	2025	4	1775	4	1525	4	1275	4	1050	4	975				
1500	4	3975	4	2550	4	2300	4	2050	4	1825	4	1575	4	1300	4	1075	2	1050		
1800	4	4725	4	3025	4	2800	4	2550	4	2300	4	2050	4	1800	4	1575	4	1325	2	1250

EQUAL PIPE SIZE	Y1 NO	Y1 LGTH	Y2 NO	Y2 LGTH	Y3 NO	Y3 LGTH	Y4 NO	Y4 LGTH	Y5 NO	Y5 LGTH	Y6 NO	Y6 LGTH	PAY QUANTITIES FOR ONE HEADWALL CONCRETE (m^3)	STEEL (kg)
450	2	975	2	1550									1.19	81
600	2	975	2	2075									1.92	110
750	2	975	2	2225	2	2300							2.40	140
900	2	975	2	2225	2	2625							3.16	179
1050	2	975	2	2225	2	3025							3.94	217
1200	2	975	2	2225	2	3425	2	3425					4.99	272
1350	2	975	2	2225	2	3500	2	3775					6.03	330
1500	2	975	2	2225	2	3500	2	4200	2	4200			7.34	399
1800	2	975	2	2225	2	3500	2	4775	2	4950	2	4950	9.91	535

DIMENSIONS AND REINFORCING COMMON TO FLARED HEADWALLS FOR SINGLE, DOUBLE AND TRIPLE LINE PIPE CULVERTS

EQUAL PIPE SIZE	MIN THICK "T"	INSIDE SPAN	INSIDE RISE	H	R	S1	S2	W	W1 X	W1 X1	W2 X	W2 X1	W3 X	W3 X1	W4 X	W4 X1	W5 X	W5 X1	W6 X	W6 X1	W7 X	W7 X1	W8 X	W8 X1	W9 X	W9 X1
450	63	560	345	705	1370	1415	1455	200	325	500	300	350	250	275												
600	75	725	460	885	1880	1955	2000	250	450	675	375	525	325	375	250	300										
750	88	920	570	990	2095	2185	2230	300	550	775	475	625	375	475	300	350	250	325								
900	100	1110	675	1115	2405	2515	2565	350	650	875	575	750	475	600	375	450	300	400								
1050	113	1300	795	1255	2755	2890	2935	400	750	1025	650	900	550	750	475	600	375	475	350	450						
1200	125	1485	915	1400	3145	3300	3345	450	850	1175	750	1025	650	900	550	750	450	625	375	475						
1350	138	1650	1015	1530	3470	3645	3690	500	950	1325	850	1175	750	1025	650	875	550	725	450	600	425	550				
1500	150	1855	1145	1680	3870	4070	4115	550	1075	1475	975	1325	875	1175	775	1050	675	900	550	750	450	625	450	600		
1800	175	2235	1370	1955	4570	4815	4865	650	1300	1725	1200	1600	1100	1450	975	1325	875	1175	775	1025	675	900	575	750	550	700

(W1–W9 columns: DETAIL DIMENSIONS FOR COMMON WING WALL REINFORCING STEEL)

GENERAL NOTES:
1. SPECIFICATIONS: MISSISSIPPI DEPARTMENT OF TRANSPORTATION, LATEST EDITION.
2. ALL CONCRETE SHALL BE CLASS "B".
3. ALL EXPOSED EDGES SHALL BE CHAMFERED 20 mm.
4. EXPOSED CONCRETE SURFACES SHALL BE FINISHED IN ACCORDANCE WITH THE APPLICABLE SECTION OF THE MDOT SPECIFICATIONS.
5. ALL LENGTHS AND QUANTITIES IN THE TABLES HEREON ARE BASED ON CONCRETE TONGUE & GROOVE PIPE.
6. DIMENSIONS SHOWN FOR BAR SPACING ARE TO ℄ BARS.
7. REINFORCEMENT (SINGLE LINE) FOR CONCRETE ARCH PIPE SHALL CONFORM TO REQUIREMENTS OF AASHTO M 206M FOR CLASS OF PIPE SHOWN ON PLANS.
8. QUANTITIES SHOWN SHALL BE THE BASIS FOR FINAL PAYMENT UNLESS AUTHORIZED MODIFICATIONS ARE MADE.

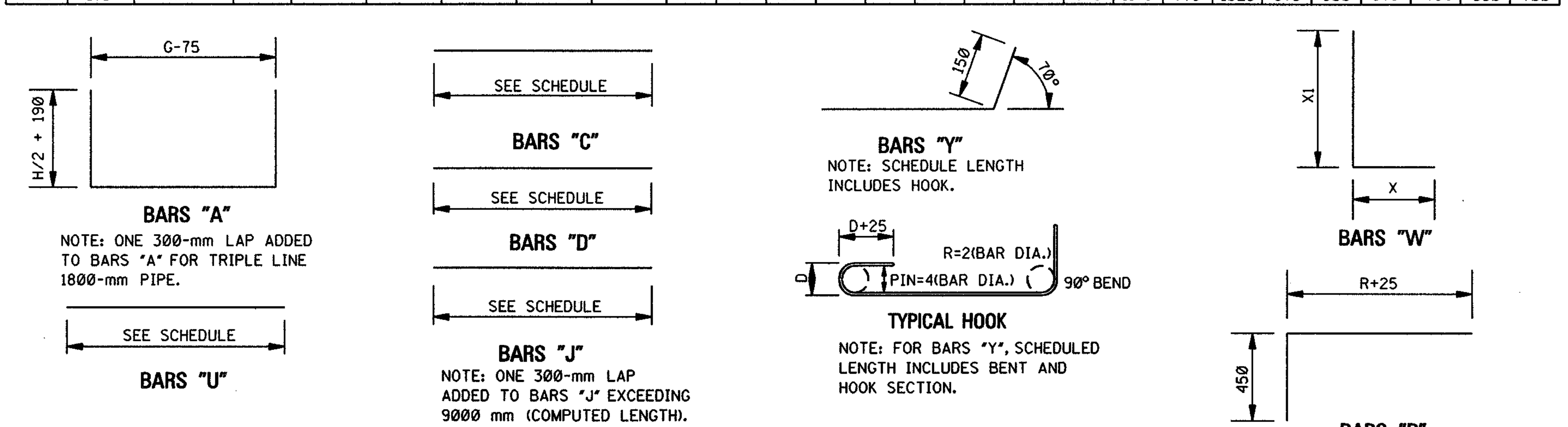

BAR BENDING DETAILS

NOTE: ALL BARS ARE #13.

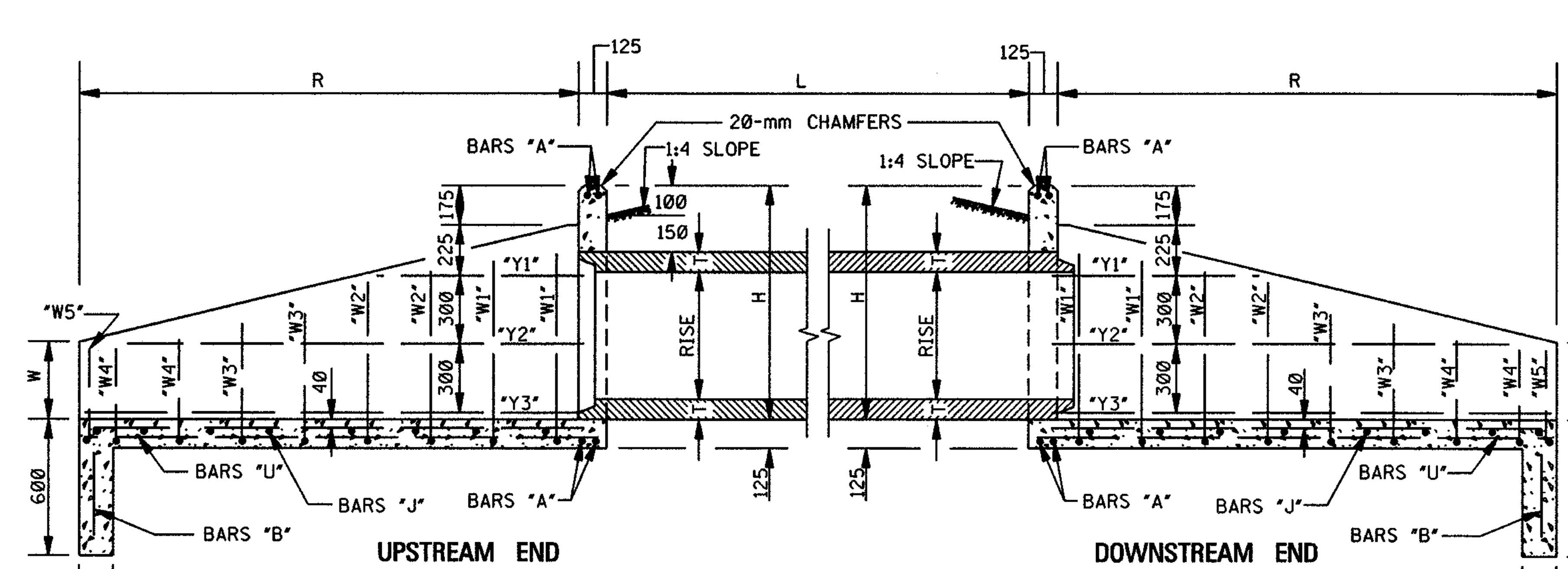

SECTION B–B

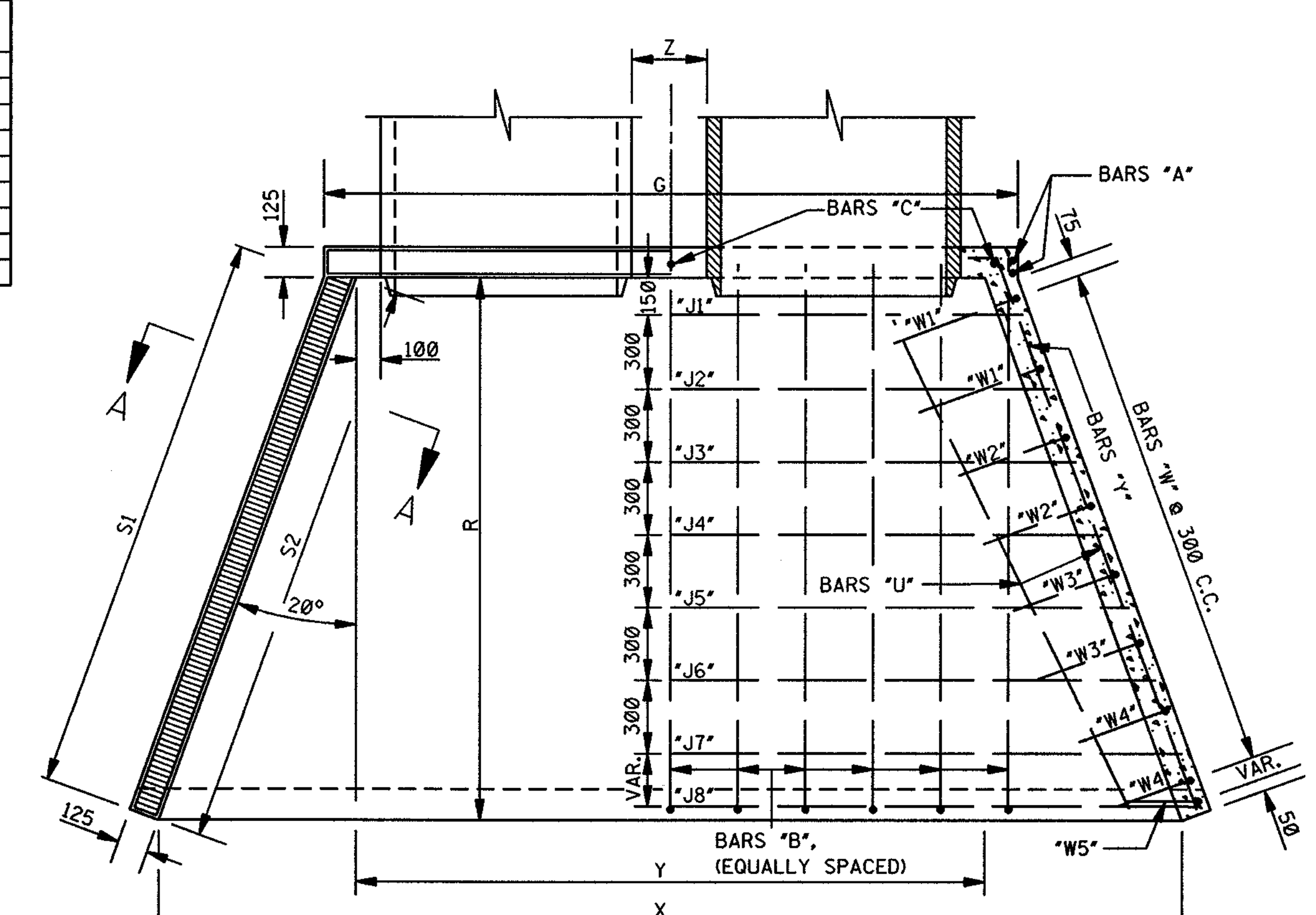

PLAN

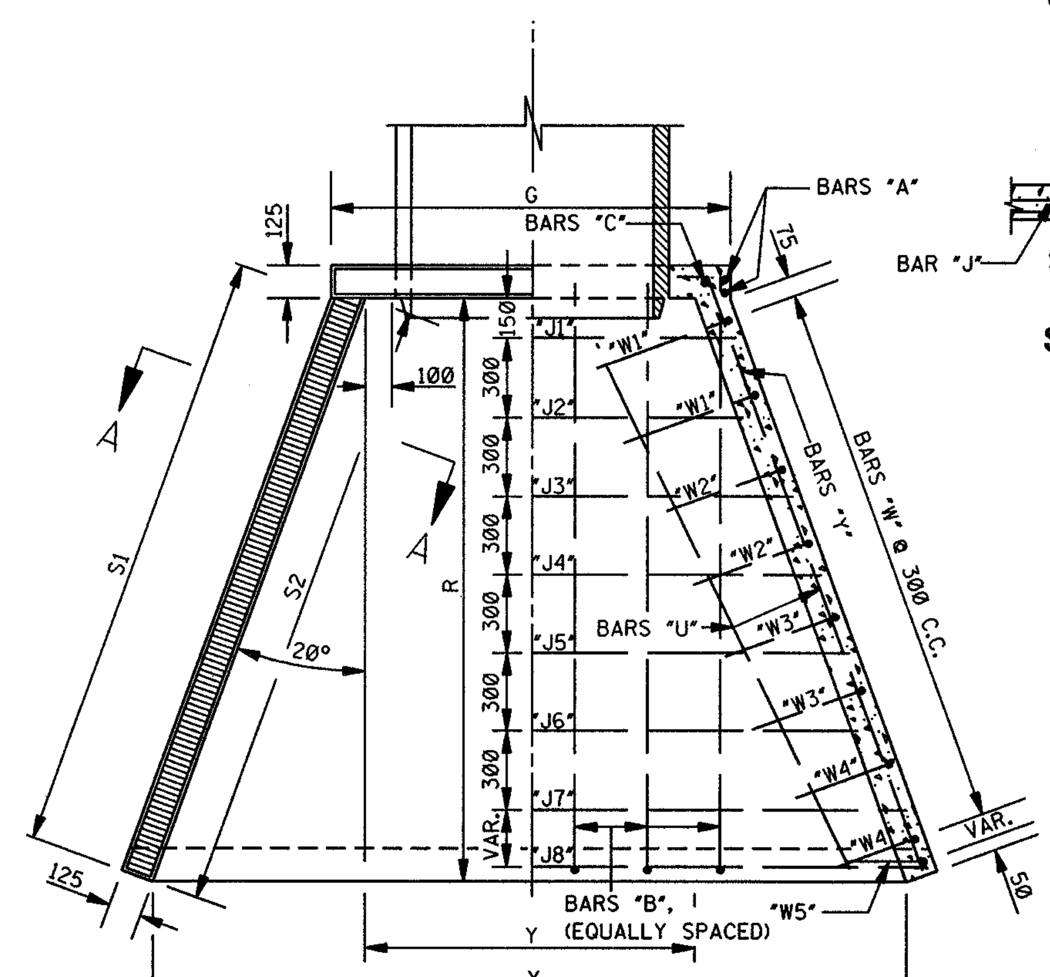

PLAN

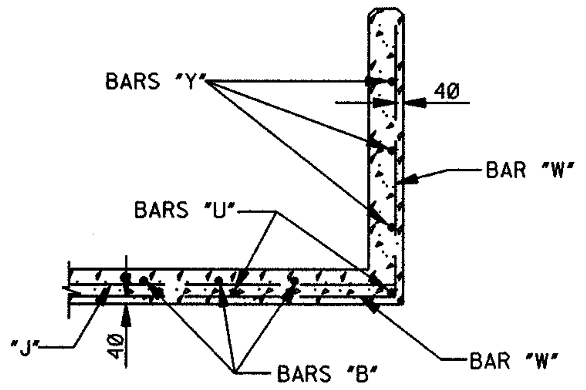

SECTION A–A

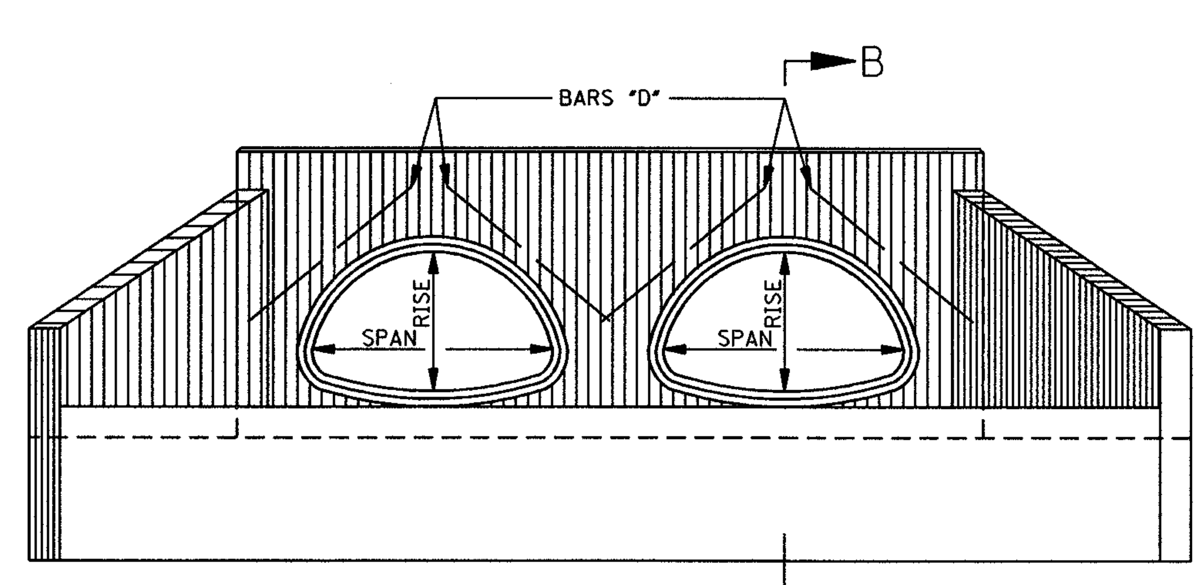

FRONT ELEVATION

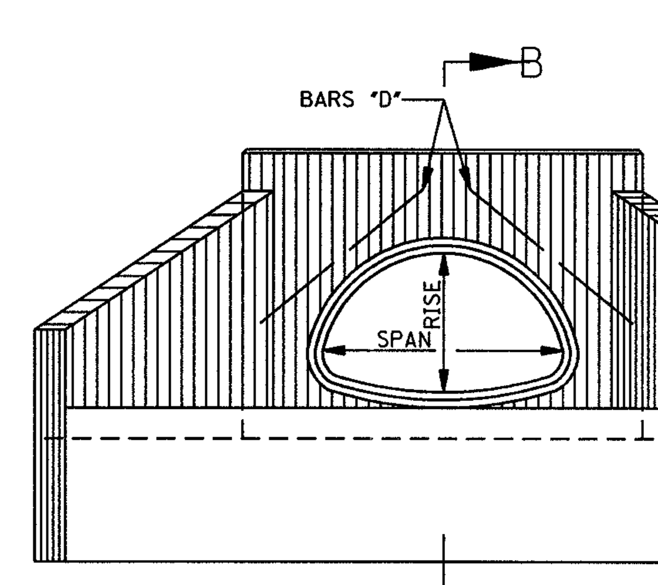

FRONT ELEVATION

ALL DIMENSIONS ARE IN MILLIMETERS (mm) EXCEPT WHERE NOTED.

STATE	PROJECT NO.
MISS.	

MISSISSIPPI DEPARTMENT OF TRANSPORTATION
ROADWAY DESIGN DIVISION
STANDARD PLAN

HEADWALLS FOR CONCRETE ARCH PIPE, 1:4 SLOPE, 0° – 15° SKEW

BY | REVISION | DATE

DEPARTMENT OF TRANSPORTATION METRIC MISSISSIPPI

WORKING NUMBER HWA-1400

ISSUE DATE: OCTOBER 1, 1998

SHEET NUMBER 351