STATE	PROJECT NO.
MISS.	

DIMENSIONS AND REINFORCING COMMON TO FLARED HEADWALLS FOR SINGLE, DOUBLE AND TRIPLE LINE PIPE CULVERTS

PIPE DIA	MIN THK "T"	C (DIMENSIONS)	H	R	S1	S2	U	W	US NO (REINFORCING STEEL)	US LGTH	UL NO	UL LGTH
375	57	175	725	1550	2040	2190	150	200	2	1550	2	1975
450	63	175	840	1800	2395	2545	150	250	2	1800	2	2325
600	75	175	1015	2300	3105	3255	150	300	2	2300	2	3050
750	88	175	1190	2700	3670	3820	150	375	2	2700	2	3600
900	100	190	1365	3150	4305	4455	150	425	2	3150	2	4250
1050	113	190	1540	3550	4870	5020	150	500	2	3550	2	4800
1200	125	190	1715	4000	5505	5655	150	565	2	4000	2	5450
1350	138	200	1890	4400	6070	6220	150	625	2	4400	2	6000
1500	150	200	2065	4900	6780	6930	150	675	2	4900	2	6675
1650	163	200	2275	5500	7615	7780	165	765	2	5500	2	7550
1800	175	200	2450	5900	8170	8345	175	825	2	5900	2	8100
2100	200	200	2800	6700	9275	9475	200	950	2	6700	2	9525
2400	225	200	3125	7500	10405	10605	200	1050	2	7500	2	10650
2700	250	200	3475	8300	11515	11740	225	1200	2	8300	2	11750

PIPE DIA	W1 S NO	W1 L NO	W1 SIZE	W1 X	W1 X1	W1 LGTH	W2 S NO	W2 L NO	W2 SIZE	W2 X	W2 X1	W2 LGTH
375	3	4	#13	325	500	825	3	4	#13	300	300	600
450	3	4	#13	375	600	975	4	6	#13	300	300	600
600	3	4	#13	500	775	1275	4	5	#13	400	475	875
750	3	4	#13	625	950	1575	4	5	#13	475	650	1125
900	3	4	#16	725	1125	1850	4	5	#13	600	825	1425
1050	3	4	#16	875	1300	2175	4	5	#13	675	1000	1675
1200	3	4	#16	925	1450	2375	4	5	#16	800	1150	1950
1350	3	4	#16	1050	1600	2650	4	5	#16	900	1300	2200
1500	3	4	#16	1150	1775	2925	4	5	#16	975	1475	2450
1650	3	4	#19	1275	2000	3275	4	5	#16	1100	1700	2800
1800	3	4	#19	1425	2225	3650	4	5	#19	1250	1925	3175
2100	3	4	#19	1625	2575	4200	4	5	#19	1550	2275	3825
2400	3	4	#22	1675	2850	4525	6	8	#22	1675	2550	4225
2700	3	4	#22	1925	3225	5150	6	8	#22	1925	2925	4850

PIPE DIA	W3 S NO	W3 L NO	W3 SIZE	W3 X	W3 X1	W3 LGTH	W4 S NO	W4 L NO	W4 SIZE	W4 X	W4 X1	W4 LGTH
375												
450												
600	2	2	#13	300	350	650						
750	3	4	#13	325	375	700						
900	4	6	#13	350	525	875						
1050	4	6	#13	475	700	1175	2	2	#13	350	550	900
1200	4	6	#13	550	850	1400	3	4	#13	375	600	975
1350	4	6	#13	675	1000	1675	4	5	#13	475	700	1175
1500	4	6	#16	750	1175	1925	4	5	#13	550	875	1425
1650	4	6	#16	950	1400	2350	4	5	#16	775	1100	1875
1800	4	6	#16	1050	1625	2675	4	5	#16	850	1325	2175
2100	4	6	#19	1350	1975	3325	4	5	#16	1125	1675	2800
2400	4	5	#19	1500	2250	3750	3	4	#16	1300	1950	3250
2700	4	5	#22	1750	2625	4375	3	5	#19	1550	2325	3875

PIPE DIA	W5 S NO	W5 L NO	W5 SIZE	W5 X	W5 X1	W5 LGTH	W6 S NO	W6 L NO	W6 SIZE	W6 X	W6 X1	W6 LGTH
375												
450												
600												
750												
900												
1050												
1200												
1350		1	#13	450	675	1125						
1500	2	4	#13	500	700	1200						
1650	4	6	#13	550	800	1350						
1800	4	6	#13	600	1025	1625	2	2	#13	575	900	1475
2100	4	6	#16	950	1375	2325	4	6	#16	750	1075	1825
2400	3	5	#16	1100	1650	2750	3	4	#16	900	1350	2250
2700	4	4	#16	1350	2025	3375	3	5	#16	1150	1725	2875

PIPE DIA	W7 S NO	W7 L NO	W7 SIZE	W7 X	W7 X1	W7 LGTH	W8 S NO	W8 L NO	W8 SIZE	W8 X	W8 X1	W8 LGTH
375												
450												
600												
750												
900												
1050												
1200												
1350												
1500												
1650												
1800												
2100												
2400	2	4	#16	650	1150	1800						
2700	3	4	#16	950	1425	2375	2	3	#16	850	1325	2175

PIPE DIA	YS1 NO	YS1 LGTH	YS2 NO	YS2 LGTH	YS3 NO	YS3 LGTH	YS4 NO	YS4 LGTH	YS5 NO	YS5 LGTH	YS6 NO	YS6 LGTH	YS7 NO	YS7 LGTH	YS8 NO	YS8 LGTH
375	1	975	1	1750												
450	1	975	1	2000												
600	1	975	1	2175	1	2500										
750	1	975	1	2175	1	2900										
900	1	975	1	2175	2	3350										
1050	1	975	1	2175	1	3375	1	3750								
1200	1	975	1	2175	1	3375	2	4200								
1350	1	975	1	2175	1	3375	1	4575	1	4600						
1500	1	975	1	2175	1	3375	1	4575	2	5100						
1650	1	975	1	2175	1	3375	1	4575	3	5700						
1800	1	1000	1	2200	1	3400	1	4600	1	5800	2	6150				
2100	1	1025	1	2225	1	3425	1	4625	1	5825	3	6975				
2400	1	1000	1	2350	1	3550	1	4675	1	5800	1	6925	3	7875		
2700	1	900	1	2250	1	3450	1	4350	1	5850	1	6975	1	8100	3	8575

PIPE DIA	YL1 NO	YL1 LGTH	YL2 NO	YL2 LGTH	YL3 NO	YL3 LGTH	YL4 NO	YL4 LGTH	YL5 NO	YL5 LGTH	YL6 NO	YL6 LGTH	YL7 NO	YL7 LGTH	YL8 NO	YL8 LGTH
375	1	1450	1	2425												
450	1	1450	1	2775												
600	1	1450	1	2950	1	3475										
750	1	1450	1	2950	1	4050										
900	1	1450	1	2950	2	4675										
1050	1	1450	1	2950	1	4750	1	5250								
1200	1	1450	1	2950	1	4750	2	5875								
1350	1	1450	1	2950	1	4750	1	6250	1	6450						
1500	1	1450	1	2950	1	4750	1	6250	2	7150						
1650	1	1475	1	2975	1	4775	1	6275	2	8025						
1800	1	1475	1	2975	1	4775	1	6275	1	8075	2	8575				
2100	1	1475	1	2975	1	4775	1	6275	1	8075	3	10000				
2400	1	1250	1	3050	1	4550	1	6050	1	7925	1	9725	3	11100		
2700	1	1300	1	3100	1	4600	1	6100	1	7600	1	9400	1	10900	4	12250

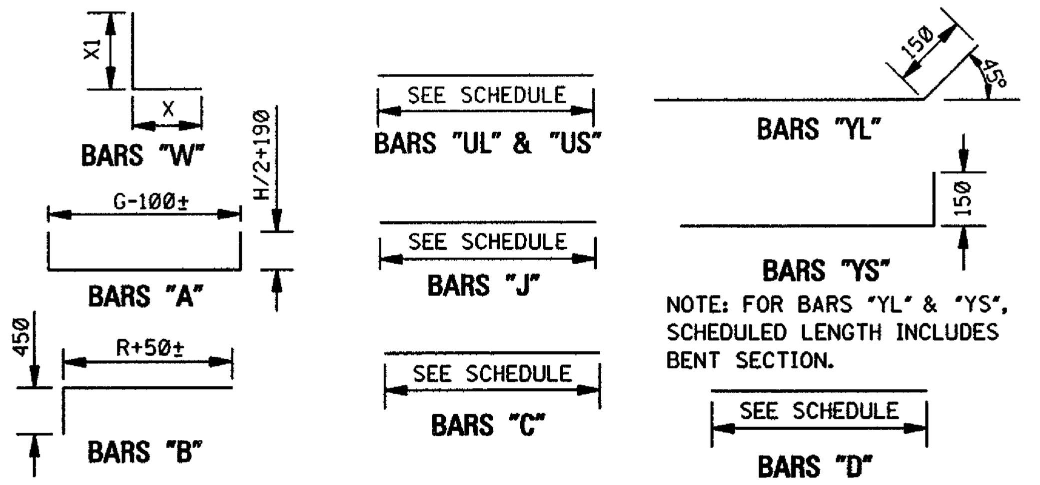

BAR BENDING DETAILS

NOTE: WHENEVER THE COMPUTED LENGTH OF BAR EXCEEDS 9000 mm, THE SCHEDULED LENGTH INCLUDES A 300-mm LAP. ALL BARS ARE #13 EXCEPT BARS "W". SEE SCHEDULE FOR SIZE OF BARS "W". IN BAR DESIGNATIONS (e.g. "YS" & "YL"), S DENOTES SHORT WING AND L DENOTES LONG WING.

GENERAL NOTES:

1. SPECIFICATIONS: MISSISSIPPI DEPARTMENT OF TRANSPORTATION, LATEST EDITION.
2. ALL CONCRETE SHALL BE CLASS "B".
3. ALL EXPOSED EDGES SHALL BE CHAMFERED 20 mm.
4. EXPOSED CONCRETE SURFACES SHALL BE FINISHED IN ACCORDANCE WITH THE APPLICABLE SECTION OF THE MDOT SPECIFICATIONS.
5. ALL LENGTHS AND QUANTITIES IN THE TABLES HEREON ARE BASED ON CONCRETE PIPE.
6. QUANTITIES SHOWN SHALL BE THE BASIS FOR FINAL PAYMENT UNLESS AUTHORIZED MODIFICATIONS ARE MADE.

DIMENSIONS AND REINFORCING FOR FLARED HEADWALL FOR SINGLE LINE PIPE CULVERT

PIPE DIA	A (DIMENSIONS)	B	E	G	X	Y	Z	A NO (REINFORCING STEEL)	A LGTH	B NO	B LGTH	C NO	C LGTH	D NO	D LGTH
375	-	-	-	1115	2300	750	-	4	2120	5	2050	2	800	2	550
450	-	-	-	1200	2635	835	-	4	2320	5	2300	2	900	2	600
600	-	-	-	1400	3340	1040	-	4	2695	6	2800	2	1075	2	675
750	-	-	-	1615	3955	1255	-	4	3085	7	3200	2	1250	2	750
900	-	-	-	1805	4590	1440	-	4	3450	7	3650	2	1425	2	825
1050	-	-	-	2005	5195	1645	-	4	3825	8	4050	2	1600	2	900
1200	-	-	-	2205	5845	1845	-	4	4200	9	4500	2	1775	2	975
1350	-	-	-	2440	6475	2075	-	4	4610	9	4900	2	1950	2	1050
1500	-	-	-	2640	7180	2280	-	4	4985	10	5400	2	2125	2	1125
1650	-	-	-	2875	7980	2480	-	4	5430	11	6000	2	2350	2	1275
1800	-	-	-	3105	8585	2685	-	4	5835	11	6400	2	2550	2	1375
2100	950	6700	600	3570	9790	3090	-	4	6650	13	7200	2	2900	2	1575
2400	1050	7500	600	3975	10990	3490	-	4	7380	15	8000	2	3225	2	1725
2700	1200	8300	600	4440	12195	3895	-	4	8195	16	8800	2	3600	2	1900

PIPE DIA	J1 NO	J1 LGTH	J2 NO	J2 LGTH	J3 NO	J3 LGTH	J4 NO	J4 LGTH	J5 NO	J5 LGTH	J6 NO	J6 LGTH	J7 NO	J7 LGTH	J8 NO	J8 LGTH	J9 NO	J9 LGTH	J10 NO	J10 LGTH	J11 NO	J11 LGTH	J12 NO	J12 LGTH	J13 NO	J13 LGTH	J14 NO	J14 LGTH
375	1	1150	1	1450	1	1750	1	2050	1	2350	1	2475																
450	1	1250	1	1550	1	1850	1	2150	1	2450	1	2750	1	2800														
600	1	1450	1	1750	1	2050	1	2350	1	2650	1	2950	1	3250	1	3500												
750	1	1675	1	1975	1	2275	1	2575	1	2875	1	3175	1	3475	1	3775	1	4075										
900	1	1850	1	2150	1	2450	1	2750	1	3050	1	3350	1	3650	1	3950	1	4250	1	4550	1	4750						
1050	1	2050	1	2350	1	2650	1	2950	1	3250	1	3550	1	3850	1	4150	1	4450	1	4750	1	5050	1	5350				
1200	1	2250	1	2550	1	2850	1	3150	1	3450	1	3750	1	4050	1	4350	1	4650	1	4950	1	5250	1	5550	1	5850	1	6000
1350	1	2500	1	2800	1	3100	1	3400	1	3700	1	4000	1	4300	1	4600	1	4900	1	5200	1	5500	1	5800	1	6100	1	6400
1500	1	2700	1	3000	1	3300	1	3600	1	3900	1	4200	1	4500	1	4800	1	5100	1	5400	1	5700	1	6000	1	6300	1	6600
1650	1	2925	1	3225	1	3525	1	3825	1	4125	1	4425	1	4725	1	5025	1	5325	1	5625	1	5925	1	6225	1	6525	1	6825
1800	1	3150	1	3450	1	3750	1	4050	1	4350	1	4650	1	4950	1	5250	1	5550	1	5850	1	6150	1	6450	1	6750	1	7050
2100	1	3625	1	3925	1	4225	1	4525	1	4825	1	5125	1	5425	1	5725	1	6025	1	6325	1	6625	1	6925	1	7225	1	7525
2400	1	4025	1	4325	1	4625	1	4925	1	5225	1	5525	1	5825	1	6125	1	6425	1	6725	1	7025	1	7325	1	7625	1	7925
2700	1	4500	1	4800	1	5100	1	5400	1	5700	1	6000	1	6300	1	6600	1	6900	1	7200	1	7500	1	7800	1	8100	1	8400

PIPE DIA	J15 NO	J15 LGTH	J16 NO	J16 LGTH	J17 NO	J17 LGTH	J18 NO	J18 LGTH	J19 NO	J19 LGTH	J20 NO	J20 LGTH	J21 NO	J21 LGTH	J22 NO	J22 LGTH	J23 NO	J23 LGTH	J24 NO	J24 LGTH	J25 NO	J25 LGTH	J26 NO	J26 LGTH	J27 NO	J27 LGTH	J28 NO	J28 LGTH	PAY QTY 1-HEADWALL CONC (m³)	STEEL (kg)
375																													0.93	56
450																													1.19	66
600																													1.76	94
750																													2.36	117
900																													3.08	160
1050																													3.86	192
1200																													4.77	249
1350	1	6625																											5.73	283
1500	1	6900	1	7200	1	7325																							6.92	355
1650	1	7125	1	7425	1	7725	1	8025	1	8150																			9.18	452
1800	1	7350	1	7650	1	7950	1	8250	1	8550	1	8750																	11.33	533
2100	1	7825	1	8125	1	8425	1	8725	1	9325	1	9625	1	9925	1	10225	1	10300											15.60	732
2400	1	8225	1	8525	1	8825	1	9425	1	9725	1	10025	1	10325	1	10625	1	10925	1	11225	1	11500							19.31	962
2700	1	8700	1	9000	1	9600	1	9900	1	10200	1	10500	1	10800	1	11100	1	11400	1	11700	1	12000	1	12300	1	12600	1	12725	24.90	1239

DIMENSIONS AND REINFORCING FOR FLARED HEADWALL FOR DOUBLE LINE PIPE CULVERT

PIPE DIA	A (DIMENSIONS)	B	E	G	X	Y	Z	A NO (REINFORCING STEEL)	A LGTH	B NO	B LGTH	C NO	C LGTH	D NO	D LGTH
375	-	-	-	2005	3195	1645	300	4	3010	8	2050	3	800	4	550
450	-	-	-	2180	3615	1815	300	4	3300	8	2300	3	900	4	600
600	-	-	-	2585	4520	2220	300	4	3880	10	2800	3	1075	4	675
750	-	-	-	3105	5440	2740	375	4	4575	11	3200	4	1250	4	750
900	-	-	-	3565	6350	3200	450	4	5210	13	3650	4	1425	4	825
1050	-	-	-	4055	7245	3695	525	4	5875	15	4050	4	1600	4	900
1200	-	-	-	4545	8185	4185	600	4	6540	16	4500	4	1775	4	975
1350	-	-	-	5095	9130	4730	675	4	7265	18	4900	5	1950	4	1050
1500	-	-	-	5585	10120	5220	750	4	7930	20	5400	5	2125	4	1125
1650	-	-	-	6105	11215	5715	825	4	8660	21	6000	5	2350	4	1275
1800	-	-	-	6630	12105	6205	900	4	9660	23	6400	6	2550	4	1375
2100	950	10800	4700	7670	13890	7190	1050	4	11050	27	7200	6	2900	4	1575
2400	1050	12175	5275	8650	15665	8165	1200	4	12355	30	8000	7	3225	4	1725
2700	1200	13550	5850	9690	17450	9150	1350	4	13745	34	8800	7	3600	4	1900

PIPE DIA	J1 NO	J1 LGTH	J2 NO	J2 LGTH	J3 NO	J3 LGTH	J4 NO	J4 LGTH	J5 NO	J5 LGTH	J6 NO	J6 LGTH	J7 NO	J7 LGTH	J8 NO	J8 LGTH	J9 NO	J9 LGTH	J10 NO	J10 LGTH	J11 NO	J11 LGTH	J12 NO	J12 LGTH	J13 NO	J13 LGTH	J14 NO	J14 LGTH
375	1	2050	1	2350	1	2650	1	2950	1	3250	1	3350																
450	1	2225	1	2525	1	2825	1	3125	1	3425	1	3775	1	3800														
600	1	2625	1	2925	1	3225	1	3525	1	3825	1	4125	1	4425	1	4675												
750	1	3150	1	3450	1	3750	1	4050	1	4350	1	4650	1	4950	1	5250	1	5600										
900	1	3625	1	3925	1	4225	1	4525	1	4825	1	5125	1	5425	1	5725	1	6025	1	6325	1	6500						
1050	1	4100	1	4400	1	4700	1	5000	1	5300	1	5600	1	5900	1	6200	1	6500	1	6800	1	7100	1	7400				
1200	1	4600	1	4900	1	5200	1	5500	1	5800	1	6100	1	6400	1	6700	1	7000	1	7300	1	7600	1	7900	1	8200	1	8325
1350	1	5150	1	5450	1	5750	1	6050	1	6350	1	6650	1	6950	1	7250	1	7550	1	7850	1	8150	1	8450	1	8750	1	9350
1500	1	5625	1	5925	1	6225	1	6525	1	6825	1	7125	1	7425	1	7725	1	8025	1	8325	1	8625	1	8925	1	9525	1	9825
1650	1	6150	1	6450	1	6750	1	7050	1	7350	1	7650	1	7950	1	8250	1	8550	1	8850	1	9450	1	9750	1	10050	1	10350
1800	1	6675	1	6975	1	7275	1	7575	1	7875	1	8175	1	8475	1	8775	1	9375	1	9675	1	9975	1	10275	1	10575	1	10875
2100	1	7725	1	8025	1	8325	1	8625	1	8925	1	9525	1	9825	1	10125	1	10425	1	10725	1	11025	1	11325	1	11625	1	11925
2400	1	8700	1	9000	1	9600	1	9900	1	10200	1	10500	1	10800	1	11100	1	11400	1	11700	1	12000	1	12300	1	12600	1	12900
2700	1	10050	1	10350	1	10650	1	10950	1	11250	1	11550	1	11850	1	12150	1	12450	1	12750	1	13050	1	13350	1	13650	1	13950

PIPE DIA	J15 NO	J15 LGTH	J16 NO	J16 LGTH	J17 NO	J17 LGTH	J18 NO	J18 LGTH	J19 NO	J19 LGTH	J20 NO	J20 LGTH	J21 NO	J21 LGTH	J22 NO	J22 LGTH	J23 NO	J23 LGTH	J24 NO	J24 LGTH	J25 NO	J25 LGTH	J26 NO	J26 LGTH	J27 NO	J27 LGTH	J28 NO	J28 LGTH	PAY QTY 1-HEADWALL CONC (m³)	STEEL (kg)
375																													1.28	73
450																													1.63	86
600																													2.38	122
750																													3.25	153
900																													4.27	213
1050																													5.39	257
1200																													6.71	328
1350	1	9575																											8.11	385
1500	1	10125	1	10425	1	10575																							9.82	480
1650	1	10650	1	10950	1	11250	1	11550	1	11675																			12.98	598
1800	1	11175	1	11475	1	11775	1	12075	1	12375	1	12575																	16.07	711
2100	1	12225	1	12525	1	12825	1	13125	1	13425	1	13725	1	14025	1	14325	1	14375											21.52	962
2400	1	13200	1	13500	1	13800	1	14100	1	14400	1	14700	1	15000	1	15300	1	15600	1	15900	1	16175							26.78	1241
2700	1	14250	1	14550	1	14850	1	15150	1	15450	1	15750	1	16050	1	16350	1	16650	1	16950	1	17250	1	17550	1	17850	1	17975	34.57	1591

DIMENSIONS AND REINFORCING FOR FLARED HEADWALL FOR TRIPLE LINE PIPE CULVERT

PIPE DIA	A (DIMENSIONS)	B	E	G	X	Y	Z	A NO (REINFORCING STEEL)	A LGTH	B NO	B LGTH	C NO	C LGTH	D NO	D LGTH
375	-	-	-	2900	4090	2540	300	4	3905	11	2050	4	800	6	550
450	-	-	-	3160	4600	2800	300	4	4280	12	2300	4	900	6	600
600	-	-	-	3765	5700	3405	300	4	5060	14	2800	4	1075	6	675
750	-	-	-	4590	6925	4225	375	4	6060	16	3200	6	1250	6	750
900	-	-	-	5325	8115	4965	450	4	6970	19	3650	6	1425	6	825
1050	-	-	-	6105	9295	5745	525	4	7925	21	4050	6	1600	6	900
1200	-	-	-	6885	10520	6520	600	4	8880	24	4500	6	1775	6	975
1350	-	-	-	7750	11790	7390	675	4	10220	27	4900	8	1950	6	1050
1500	-	-	-	8530	13070	8170	750	4	11175	29	5400	8	2125	6	1125
1650	-	-	-	9340	14445	8945	825	4	12195	32	6000	8	2350	6	1275
1800	-	-	-	10150	15625	9725	900	4	13180	35	6400	10	2550	6	1375
2100	950	14900	8800	11770	17985	11285	1050	4	15150	40	7200	10	2900	6	1575
2400	1050	16850	9950	13330	20345	12845	1200	4	17035	45	8000	14	3225	6	1725
2700	1200	18800	11100	14945	22700	14400	1350	4	19300	50	8800	14	3600	6	1900

PIPE DIA	J1 NO	J1 LGTH	J2 NO	J2 LGTH	J3 NO	J3 LGTH	J4 NO	J4 LGTH	J5 NO	J5 LGTH	J6 NO	J6 LGTH	J7 NO	J7 LGTH	J8 NO	J8 LGTH	J9 NO	J9 LGTH	J10 NO	J10 LGTH	J11 NO	J11 LGTH	J12 NO	J12 LGTH	J13 NO	J13 LGTH	J14 NO	J14 LGTH
375	1	2950	1	3250	1	3550	1	3850	1	4150	1	4250																
450	1	3200	1	3500	1	3800	1	4100	1	4400	1	4750	1	4775														
600	1	3825	1	4125	1	4425	1	4725	1	5025	1	5325	1	5625	1	5850												
750	1	4625	1	4925	1	5225	1	5525	1	5825	1	6125	1	6425	1	6725	1	7075										
900	1	5375	1	5675	1	5975	1	6275	1	6575	1	6875	1	7175	1	7475	1	7775	1	8075	1	8250						
1050	1	6150	1	6450	1	6750	1	7050	1	7350	1	7650	1	7950	1	8250	1	8550	1	8850	1	9450	1	9750				
1200	1	6925	1	7225	1	7525	1	7825	1	8125	1	8425	1	8725	1	9325	1	9625	1	9925	1	10225	1	10525	1	10825	1	10975
1350	1	7800	1	8100	1	8400	1	8700	1	9000	1	9600	1	9900	1	10200	1	10500	1	10800	1	11100	1	11400	1	11700	1	12000
1500	1	8575	1	8875	1	9475	1	9775	1	10075	1	10375	1	10675	1	10975	1	11275	1	11575	1	11875	1	12175	1	12475	1	12775
1650	1	9700	1	10000	1	10300	1	10600	1	10900	1	11200	1	11500	1	11800	1	12100	1	12400	1	12700	1	13000	1	13300	1	13600
1800	1	10500	1	10800	1	11100	1	11400	1	11700	1	12000	1	12300	1	12600	1	12900	1	13200	1	13500	1	13800	1	14100	1	14400
2100	1	12125	1	12425	1	12725	1	13025	1	13325	1	13625	1	13925	1	14225	1	14525	1	14825	1	15125	1	15425	1	15725	1	16025
2400	1	13675	1	13975	1	14275	1	14575	1	14875	1	15175	1	15475	1	15775	1	16075	1	16375	1	16675	1	16975	1	17275	1	17575
2700	1	15300	1	15600	1	15900	1	16200	1	16500	1	16800	1	17100	1	17400	1	17700	1	18000	1	18600	1	18900	1	19200	1	19500

PIPE DIA	J15 NO	J15 LGTH	J16 NO	J16 LGTH	J17 NO	J17 LGTH	J18 NO	J18 LGTH	J19 NO	J19 LGTH	J20 NO	J20 LGTH	J21 NO	J21 LGTH	J22 NO	J22 LGTH	J23 NO	J23 LGTH	J24 NO	J24 LGTH	J25 NO	J25 LGTH	J26 NO	J26 LGTH	J27 NO	J27 LGTH	J28 NO	J28 LGTH	PAY QTY 1-HEADWALL CONC (m³)	STEEL (kg)
375																													1.64	90
450																													2.06	108
600																													3.01	150
750																													4.14	192
900																													5.47	265
1050																													6.93	320
1200																													8.65	413
1350	1	12250																											10.50	490
1500	1	13075	1	13375	1	13525																							12.71	603
1650	1	13900	1	14200	1	14500	1	14800	1	14900																			16.80	751
1800	1	14700	1	15000	1	15300	1	15600	1	15900	1	16100																	20.81	886
2100	1	16325	1	16625	1	16925	1	17225	1	17525	1	17825	1	18425	1	18725	1	18800											27.45	1182
2400	1	17875	1	18475	1	18775	1	19075	1	19375	1	19675	1	19975	1	20275	1	20575	1	20875	1	21150							34.25	1525
2700	1	19800	1	20100	1	20400	1	20700	1	21000	1	21300	1	21600	1	21900	1	22200	1	22500	1	22800	1	23100	1	23400	1	23525	44.24	1934

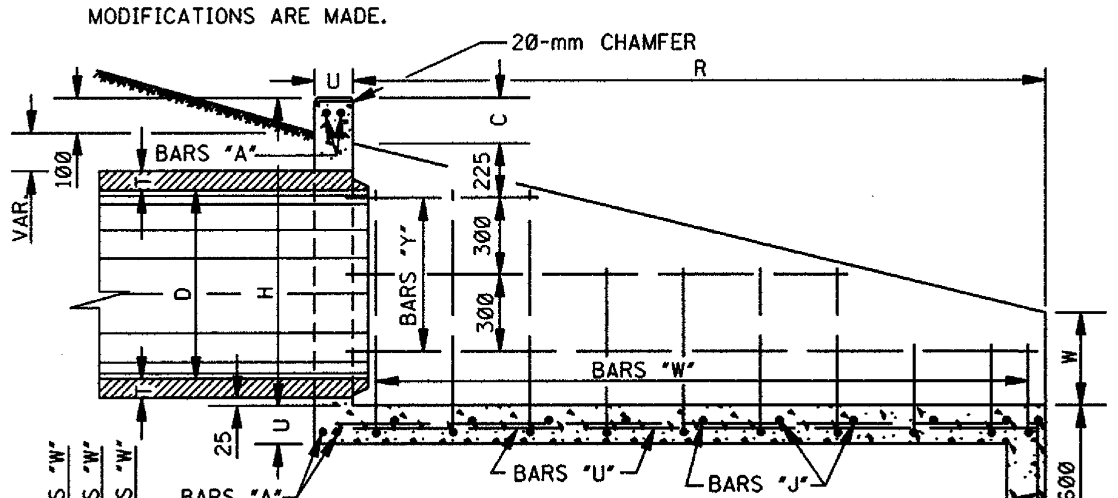

SECTION B–B

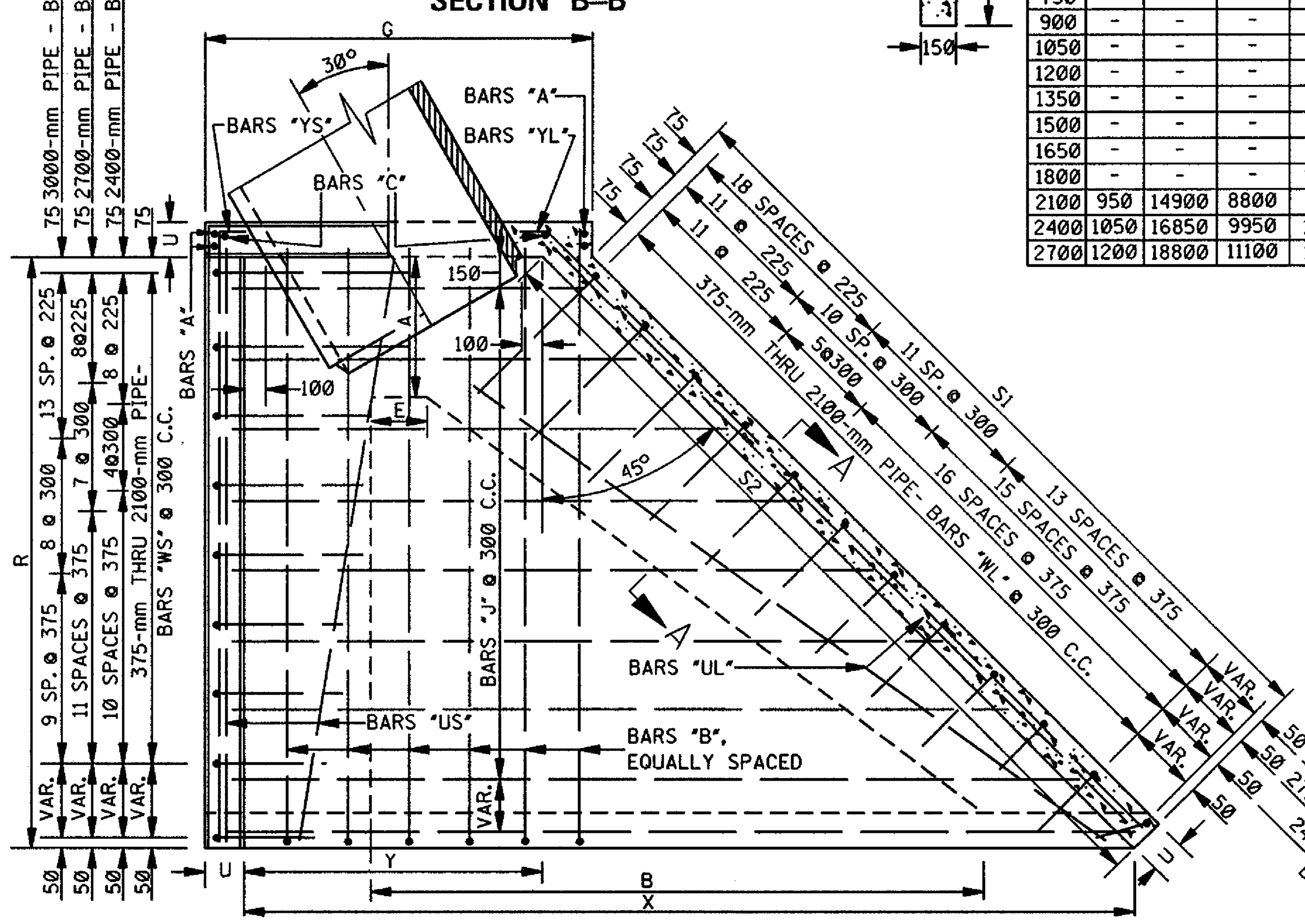

PLAN

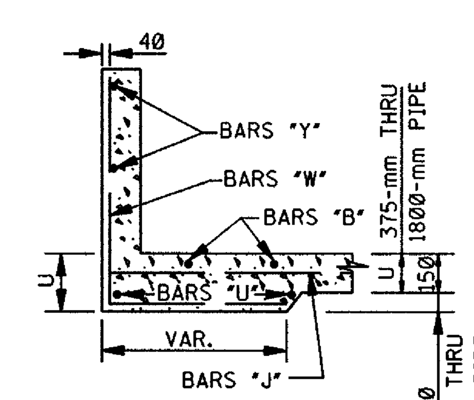

SECTION A–A

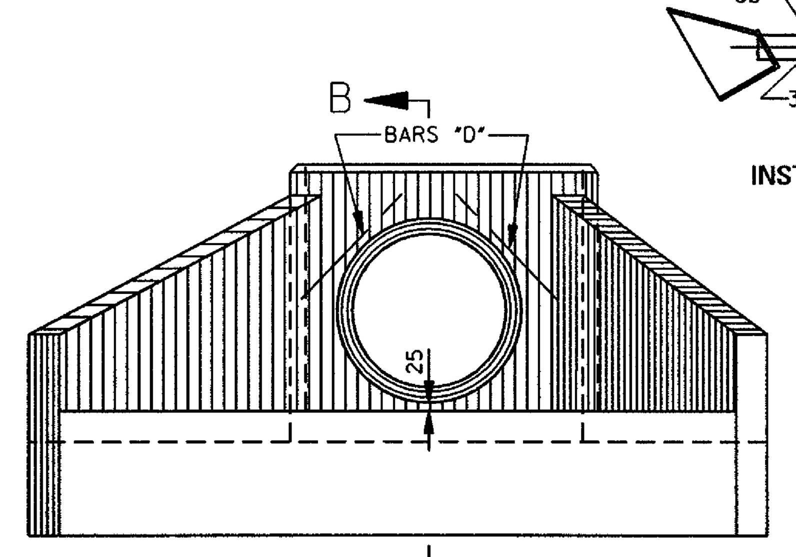

FRONT ELEVATION

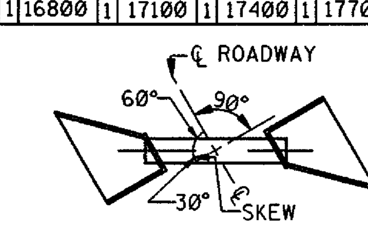

INSTALLATION

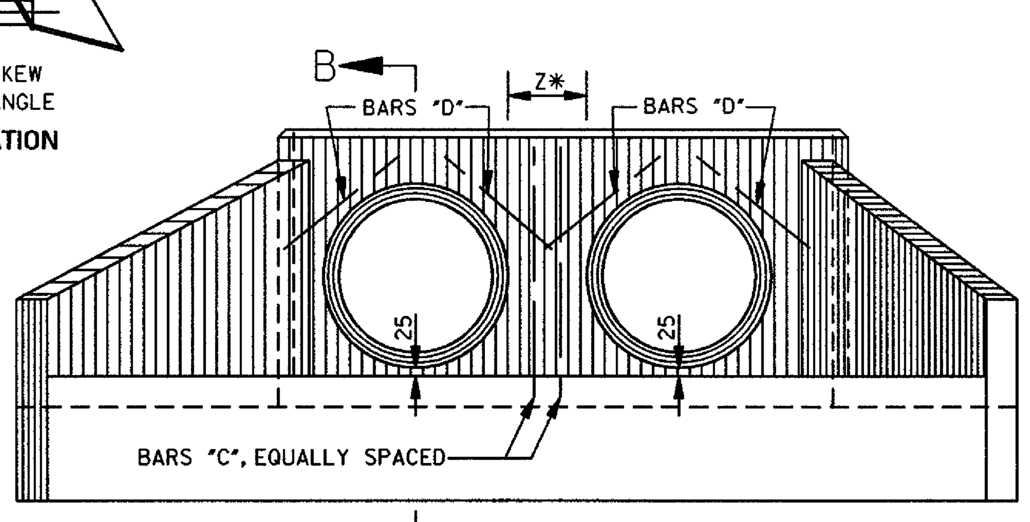

FRONT ELEVATION

*NOTE: MEASURE NORMAL (PERPENDICULAR) TO PIPE.

ALL DIMENSIONS ARE IN MILLIMETERS (mm) EXCEPT WHERE NOTED.

BY	MISSISSIPPI DEPARTMENT OF TRANSPORTATION ROADWAY DESIGN DIVISION STANDARD PLAN
REVISION	**HEADWALLS FOR CONCRETE PIPE 1:4 SLOPE – 30° SKEW**
DATE	ISSUE DATE: OCTOBER 1, 1998

DEPARTMENT OF TRANSPORTATION METRIC MISSISSIPPI

WORKING NUMBER HW-1430

SHEET NUMBER 347