STATE	PROJECT NO.
MISS.	

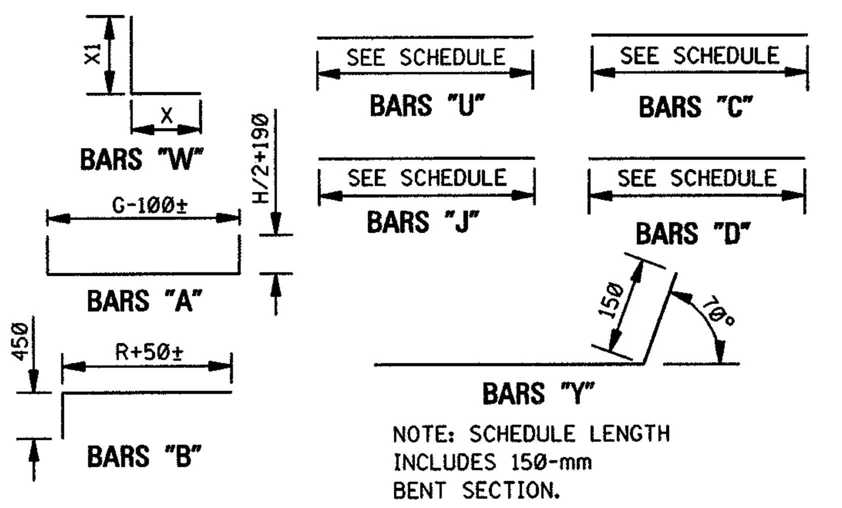

BAR BENDING DETAILS

NOTE: WHENEVER THE COMPUTED LENGTH OF BAR EXCEEDS 9000 mm, THE SCHEDULED LENGTH INCLUDES A 300-mm LAP. ALL BARS ARE #13 EXCEPT BARS "W". SEE SCHEDULE FOR SIZE OF BARS "W".

GENERAL NOTES:

1. SPECIFICATIONS: MISSISSIPPI DEPARTMENT OF TRANSPORTATION, LATEST EDITION.
2. ALL CONCRETE SHALL BE CLASS "B".
3. ALL EXPOSED EDGES SHALL BE CHAMFERED 20 mm.
4. EXPOSED CONCRETE SURFACES SHALL BE FINISHED IN ACCORDANCE WITH THE APPLICABLE SECTION OF THE MDOT SPECIFICATIONS.
5. ALL LENGTHS AND QUANTITIES IN THE TABLES HEREON ARE BASED ON CONCRETE PIPE.
6. QUANTITIES SHOWN SHALL BE THE BASIS FOR FINAL PAYMENT UNLESS AUTHORIZED MODIFICATIONS ARE MADE.

DIMENSIONS AND REINFORCING COMMON TO FLARED HEADWALLS FOR SINGLE, DOUBLE AND TRIPLE LINE PIPE CULVERTS

DIMENSIONS / REINFORCING STEEL (U, W1–W3)

PIPE DIA	MIN THK "T"	C	H	R	S1	S2	U	W	U NO	U LGTH	W1 NO	W1 SIZE	W1 X	W1 X1	W1 LGTH	W2 NO	W2 SIZE	W2 X	W2 X1	W2 LGTH	W3 NO	W3 SIZE	W3 X	W3 X1	W3 LGTH
375	57	175	725	1550	1595	1650	150	200	4	1525	4	#13	325	500	825	6	#13	300	300	600	2	#13	300	250	550
450	63	175	840	1800	1865	1915	150	250	4	1775	4	#13	375	600	975	2	#13	375	550	925	8	#13	325	300	625
600	75	175	1015	2300	2395	2445	150	300	4	2325	4	#13	500	775	1275	8	#13	400	475	875	6	#13	300	300	600
750	88	175	1190	2700	2820	2870	150	375	4	2750	4	#13	625	950	1575	8	#13	475	650	1125	8	#13	325	350	675
900	100	190	1365	3150	3300	3355	150	425	4	3225	4	#16	725	1125	1850	8	#13	600	825	1425	8	#13	425	525	950
1050	113	190	1540	3550	3725	3780	150	500	4	3650	4	#16	875	1300	2175	8	#16	675	1000	1675	10	#13	475	700	1175
1200	125	190	1715	4000	4205	4255	150	565	4	4150	4	#16	925	1450	2375	8	#16	800	1150	1950	10	#13	600	850	1450
1350	138	200	1890	4400	4630	4680	150	625	4	4575	4	#16	1050	1600	2650	10	#16	900	1300	2200	8	#16	675	1000	1675
1500	150	200	2065	4900	5165	5215	150	675	4	5075	4	#16	1150	1775	2925	10	#16	975	1475	2450	8	#16	750	1175	1925
1650	163	200	2275	5500	5795	5855	165	765	4	5725	4	#19	1275	2000	3275	10	#16	1100	1700	2800	8	#16	950	1400	2350
1800	175	200	2450	5900	6215	6280	175	825	4	6150	6	#19	1425	2225	3650	8	#19	1250	1925	3175	8	#16	1050	1625	2675
2100	200	200	2800	6700	7060	7130	200	950	4	6975	6	#19	1625	2575	4200	6	#19	1550	2275	3825	10	#19	1350	1975	3325
2400	225	200	3125	7500	7915	7980	200	1050	4	7900	6	#22	1675	2850	4525	8	#22	1675	2550	4225	10	#19	1500	2250	3750
2700	250	200	3475	8300	8755	8935	225	1200	4	8750	8	#22	1925	3225	5150	10	#22	1925	2925	4850	8	#22	1750	2625	4375

REINFORCING STEEL (W4–W8)

PIPE DIA	W4 NO	W4 SIZE	W4 X	W4 X1	W4 LGTH	W5 NO	W5 SIZE	W5 X	W5 X1	W5 LGTH	W6 NO	W6 SIZE	W6 X	W6 X1	W6 LGTH	W7 NO	W7 SIZE	W7 X	W7 X1	W7 LGTH	W8 NO	W8 SIZE	W8 X	W8 X1	W8 LGTH
375																									
450																									
600																									
750																									
900	4	#13	325	475	800																				
1050	4	#13	300	400	700																				
1200	8	#13	375	550	925																				
1350	10	#13	500	700	1200																				
1500	10	#13	550	875	1425	4	#13	400	600	1000															
1650	8	#16	775	1100	1875	10	#13	550	800	1350															
1800	10	#16	850	1325	2175	8	#13	600	1025	1625	4	#13	500	725	1225										
2100	8	#16	1125	1675	2800	8	#16	950	1375	2325	10	#16	750	1075	1825										
2400	8	#16	1300	1950	3250	6	#16	1100	1650	2750	6	#16	900	1350	2250	6	#16	650	1150	1800					
2700	8	#19	1550	2325	3875	6	#16	1350	2025	3375	8	#16	1150	1725	2875	6	#16	950	1425	2375	4	#16	925	1350	2275

REINFORCING STEEL (Y1–Y8)

PIPE DIA	Y1 NO	Y1 LGTH	Y2 NO	Y2 LGTH	Y3 NO	Y3 LGTH	Y4 NO	Y4 LGTH	Y5 NO	Y5 LGTH	Y6 NO	Y6 LGTH	Y7 NO	Y7 LGTH	Y8 NO	Y8 LGTH
375	2	1025	2	1850												
450	2	1025	2	2100												
600	2	1025	2	2300												
750	2	1025	2	2225	2	3050										
900	2	1025	2	2325	4	3550										
1050	2	1025	2	2225	2	3700	2	3975								
1200	2	1025	2	2300	2	3500	4	4450								
1350	2	1025	2	2300	2	3675	4	4875								
1500	2	1025	2	2300	2	3500	2	4925	4	5425						
1650	2	1025	2	2300	2	3700	2	4925	6	6075						
1800	2	1025	2	2300	2	3525	2	4925	2	6225	4	6500				
2100	2	1025	2	2300	2	3475	2	4925	2	6225	6	7350				
2400	2	1050	2	2250	2	3750	2	4950	2	6075	2	7575	6	8200		
2700	2	1125	2	2250	2	3450	2	4800	2	5925	2	7425	2	8925	8	9500

DIMENSIONS AND REINFORCING FOR FLARED HEADWALL FOR SINGLE LINE PIPE CULVERT

DIMENSIONS / REINFORCING STEEL (A–D)

PIPE DIA	A	B	E	G	X	Y	Z	A NO	A LGTH	B NO	B LGTH	C NO	C LGTH	D NO	D LGTH
375	-	-	-	995	1805	675	-	4	2000	4	2050	2	800	2	550
450	-	-	-	1070	2060	750	-	4	2190	5	2300	2	900	2	600
600	-	-	-	1245	2600	925	-	4	2540	5	2800	2	1075	2	675
750	-	-	-	1430	3080	1115	-	4	2900	6	3200	2	1250	2	750
900	-	-	-	1595	3570	1275	-	4	3240	7	3650	2	1425	2	825
1050	-	-	-	1770	4035	1450	-	4	3590	7	4050	2	1600	2	900
1200	-	-	-	1945	4540	1625	-	4	3940	8	4500	2	1775	2	975
1350	-	-	-	2145	5030	1825	-	4	4315	8	4900	2	1950	2	1050
1500	-	-	-	2320	5565	2000	-	4	4665	9	5400	2	2125	2	1125
1650	-	-	-	2520	6180	2175	-	4	5075	9	6000	2	2350	2	1275
1800	-	-	-	2720	6645	2350	-	4	5450	10	6400	2	2550	2	1375
2100	1500	6000	600	3125	7580	2700	-	4	6205	11	7200	2	2925	2	1575
2400	1700	6700	600	3475	8510	3050	-	4	6880	12	8000	2	3225	2	1725
2700	1900	7500	600	3880	9445	3400	-	4	7635	14	8800	2	3600	2	1900

REINFORCING STEEL (J1–J14)

PIPE DIA	J1 NO	J1 LGTH	J2 NO	J2 LGTH	J3 NO	J3 LGTH	J4 NO	J4 LGTH	J5 NO	J5 LGTH	J6 NO	J6 LGTH	J7 NO	J7 LGTH	J8 NO	J8 LGTH	J9 NO	J9 LGTH	J10 NO	J10 LGTH	J11 NO	J11 LGTH	J12 NO	J12 LGTH	J13 NO	J13 LGTH	J14 NO	J14 LGTH
375	1	925	1	1150	1	1375	1	1600	1	1825	1	1925																
450	1	1000	1	1225	1	1450	1	1675	1	1900	1	2100	1	2175														
600	1	1200	1	1400	1	1625	1	1850	1	2075	1	2300	1	2500	1	2700												
750	1	1375	1	1600	1	1825	1	2050	1	2250	1	2475	1	2700	1	2925	1	3125	1	3200								
900	1	1550	1	1775	1	2000	1	2200	1	2425	1	2650	1	2875	1	3100	1	3300	1	3525	1	3700						
1050	1	1700	1	1925	1	2150	1	2375	1	2575	1	2800	1	3025	1	3250	1	3475	1	3700	1	3900	1	4150				
1200	1	1900	1	2100	1	2325	1	2550	1	2775	1	2975	1	3200	1	3425	1	3625	1	3850	1	4075	1	4300	1	4500	1	4650
1350	1	2125	1	2325	1	2550	1	2775	1	2975	1	3200	1	3425	1	3625	1	3850	1	4075	1	4300	1	4500	1	4725	1	4950
1500	1	2275	1	2500	1	2725	1	2925	1	3150	1	3375	1	3600	1	3800	1	4025	1	4250	1	4475	1	4675	1	4900	1	5125
1650	1	2475	1	2675	1	2900	1	3125	1	3350	1	3550	1	3775	1	4000	1	4225	1	4425	1	4650	1	4875	1	5100	1	5325
1800	1	2650	1	2875	1	3075	1	3300	1	3525	1	3750	1	3950	1	4175	1	4400	1	4625	1	4825	1	5050	1	5275	1	5475
2100	1	3025	1	3250	1	3475	1	3675	1	3900	1	4125	1	4350	1	4575	1	4775	1	5000	1	5225	1	5450	1	5650	1	5875
2400	1	3475	1	3700	1	3925	1	4125	1	4350	1	4575	1	4800	1	5025	1	5225	1	5450	1	5675	1	5900	1	6100	1	6325
2700	1	3875	1	4100	1	4325	1	4550	1	4750	1	4975	1	5200	1	5425	1	5625	1	5850	1	6075	1	6300	1	6500	1	6725

REINFORCING STEEL (J15–J28) / PAY QTY 1-HEADWALL

PIPE DIA	J15 NO	J15 LGTH	J16 NO	J16 LGTH	J17 NO	J17 LGTH	J18 NO	J18 LGTH	J19 NO	J19 LGTH	J20 NO	J20 LGTH	J21 NO	J21 LGTH	J22 NO	J22 LGTH	J23 NO	J23 LGTH	J24 NO	J24 LGTH	J25 NO	J25 LGTH	J26 NO	J26 LGTH	J27 NO	J27 LGTH	J28 NO	J28 LGTH	CONC (m^3)	STEEL (kg)
375																													0.78	47
450																													1.00	58
600																													1.47	74
750																													1.98	102
900																													2.57	138
1050																													3.22	168
1200																													3.99	211
1350	1	5150																											4.78	251
1500	1	5325	1	5550	1	5675																							5.77	304
1650	1	5525	1	5750	1	5975	1	6200	1	6300																			7.65	386
1800	1	5700	1	5925	1	6150	1	6350	1	6575	1	6775																	9.44	464
2100	1	6100	1	6300	1	6525	1	6750	1	6975	1	7175	1	7400	1	7625	1	7725											13.04	618
2400	1	6550	1	6750	1	6975	1	7200	1	7425	1	7625	1	7850	1	8075	1	8300	1	8500	1	8675							16.18	788
2700	1	6950	1	7150	1	7375	1	7600	1	7825	1	8025	1	8250	1	8475	1	8700	1	8900	1	9425	1	9650	1	9875	1	9925	21.87	1085

DIMENSIONS AND REINFORCING FOR FLARED HEADWALL FOR DOUBLE LINE PIPE CULVERT

DIMENSIONS / REINFORCING STEEL (A–D)

PIPE DIA	A	B	E	G	X	Y	Z	A NO	A LGTH	B NO	B LGTH	C NO	C LGTH	D NO	D LGTH
375	-	-	-	1770	2580	1450	300	4	2775	7	2050	3	800	4	550
450	-	-	-	1920	2910	1600	300	4	3040	8	2300	3	900	4	600
600	-	-	-	2270	3625	1950	300	4	3565	9	2800	3	1075	4	675
750	-	-	-	2720	4365	2400	375	4	4190	10	3200	4	1250	4	750
900	-	-	-	3120	5095	2800	450	4	4765	12	3650	4	1425	4	825
1050	-	-	-	3545	5810	3225	525	4	5365	13	4050	4	1600	4	900
1200	-	-	-	3970	6565	3650	600	4	5965	15	4500	4	1775	4	975
1350	-	-	-	4445	7330	4125	675	4	6615	16	4900	5	1950	4	1050
1500	-	-	-	4870	8115	4550	750	4	7215	17	5400	5	2125	4	1125
1650	-	-	-	5320	8980	4975	825	4	7875	18	6000	5	2350	4	1275
1800	-	-	-	5770	9695	5400	900	4	8500	20	6400	5	2550	4	1375
2100	900	9550	4150	6675	11130	6250	1050	4	10055	23	7200	6	2925	4	1575
2400	900	10750	4650	7525	12560	7100	1200	4	11230	26	8025	7	3225	4	1725
2700	900	12050	5150	8430	13995	7950	1350	4	12485	29	8825	7	3600	4	1900

REINFORCING STEEL (J1–J14)

PIPE DIA	J1 NO	J1 LGTH	J2 NO	J2 LGTH	J3 NO	J3 LGTH	J4 NO	J4 LGTH	J5 NO	J5 LGTH	J6 NO	J6 LGTH	J7 NO	J7 LGTH	J8 NO	J8 LGTH	J9 NO	J9 LGTH	J10 NO	J10 LGTH	J11 NO	J11 LGTH	J12 NO	J12 LGTH	J13 NO	J13 LGTH	J14 NO	J14 LGTH
375	1	1700	1	1925	1	2150	1	2375	1	2600	1	2700																
450	1	1850	1	2075	1	2300	1	2525	1	2750	1	2950	1	3025														
600	1	2225	1	2425	1	2650	1	2875	1	3100	1	3325	1	3525	1	3725												
750	1	2650	1	2875	1	3100	1	3325	1	3525	1	3750	1	3975	1	4200	1	4400	1	4525								
900	1	3075	1	3300	1	3525	1	3725	1	3950	1	4175	1	4400	1	4625	1	4825	1	5050	1	5225						
1050	1	3475	1	3700	1	3925	1	4125	1	4350	1	4575	1	4800	1	5025	1	5250	1	5475	1	5675	1	5925				
1200	1	3925	1	4125	1	4350	1	4575	1	4800	1	5000	1	5225	1	5450	1	5650	1	5875	1	6100	1	6325	1	6525	1	6675
1350	1	4425	1	4625	1	4850	1	5075	1	5275	1	5500	1	5725	1	5925	1	6150	1	6375	1	6600	1	6800	1	7025	1	7250
1500	1	4825	1	5050	1	5275	1	5475	1	5700	1	5925	1	6150	1	6350	1	6575	1	6800	1	7025	1	7225	1	7450	1	7675
1650	1	5275	1	5475	1	5700	1	5925	1	6150	1	6350	1	6575	1	6800	1	7025	1	7225	1	7450	1	7675	1	7900	1	8125
1800	1	5700	1	5925	1	6125	1	6350	1	6575	1	6800	1	7000	1	7225	1	7450	1	7675	1	7875	1	8100	1	8325	1	8525
2100	1	6575	1	6800	1	7025	1	7225	1	7450	1	7675	1	7900	1	8125	1	8325	1	8550	1	8775	1	9300	1	9500	1	9725
2400	1	7525	1	7750	1	7975	1	8175	1	8400	1	8625	1	8850	1	9375	1	9575	1	9800	1	10025	1	10250	1	10450	1	10675
2700	1	8425	1	8650	1	8875	1	9400	1	9600	1	9825	1	10050	1	10275	1	10475	1	10700	1	10925	1	11150	1	11350	1	11575

REINFORCING STEEL (J15–J28) / PAY QTY 1-HEADWALL

PIPE DIA	J15 NO	J15 LGTH	J16 NO	J16 LGTH	J17 NO	J17 LGTH	J18 NO	J18 LGTH	J19 NO	J19 LGTH	J20 NO	J20 LGTH	J21 NO	J21 LGTH	J22 NO	J22 LGTH	J23 NO	J23 LGTH	J24 NO	J24 LGTH	J25 NO	J25 LGTH	J26 NO	J26 LGTH	J27 NO	J27 LGTH	J28 NO	J28 LGTH	CONC (m^3)	STEEL (kg)
375																													1.06	63
450																													1.34	77
600																													1.95	100
750																													2.65	137
900																													3.47	184
1050																													4.37	225
1200																													5.42	284
1350	1	7450																											6.54	342
1500	1	7875	1	8100	1	8225																							7.90	409
1650	1	8325	1	8550	1	8775	1	9000	1	9100																			10.53	513
1800	1	8750	1	8975	1	9500	1	9700	1	9925	1	10125																	13.09	612
2100	1	9950	1	10150	1	10375	1	10600	1	10825	1	11025	1	11250	1	11475	1	11575											16.76	818
2400	1	10900	1	11100	1	11325	1	11550	1	11775	1	11975	1	12200	1	12425	1	12650	1	12850	1	13075							22.48	1043
2700	1	11800	1	12000	1	12225	1	12450	1	12675	1	12875	1	13100	1	13325	1	13550	1	13750	1	13975	1	14200	1	14400	1	14625	29.85	1391

DIMENSIONS AND REINFORCING FOR FLARED HEADWALL FOR TRIPLE LINE PIPE CULVERT

DIMENSIONS / REINFORCING STEEL (A–D)

PIPE DIA	A	B	E	G	X	Y	Z	A NO	A LGTH	B NO	B LGTH	C NO	C LGTH	D NO	D LGTH
375	-	-	-	2545	3355	2225	300	4	3550	10	2050	4	800	6	550
450	-	-	-	2770	3760	2450	300	4	3890	11	2300	4	900	6	600
600	-	-	-	3295	4650	2975	300	4	4590	13	2800	4	1075	6	675
750	-	-	-	4005	5655	3690	375	4	5475	14	3200	6	1250	6	750
900	-	-	-	4645	6620	4325	450	4	6290	17	3650	6	1425	6	825
1050	-	-	-	5320	7585	5000	525	4	7140	19	4050	6	1600	6	900
1200	-	-	-	5995	8590	5675	600	4	7990	22	4500	6	1775	6	975
1350	-	-	-	6745	9630	6425	675	4	8915	24	4900	8	1950	6	1050
1500	-	-	-	7420	10665	7100	750	4	10065	25	5400	8	2125	6	1125
1650	-	-	-	8120	11780	7775	825	4	10975	27	6000	8	2350	6	1275
1800	-	-	-	8820	12745	8450	900	4	11850	30	6400	8	2550	6	1375
2100	900	13100	7700	10225	14680	9800	1050	4	13605	35	7200	10	2925	6	1575
2400	900	14800	8700	11575	16610	11150	1200	4	15280	39	8025	12	3225	6	1725
2700	900	16600	9700	12980	18545	12500	1350	4	17035	44	8825	12	3600	6	1900

REINFORCING STEEL (J1–J14)

PIPE DIA	J1 NO	J1 LGTH	J2 NO	J2 LGTH	J3 NO	J3 LGTH	J4 NO	J4 LGTH	J5 NO	J5 LGTH	J6 NO	J6 LGTH	J7 NO	J7 LGTH	J8 NO	J8 LGTH	J9 NO	J9 LGTH	J10 NO	J10 LGTH	J11 NO	J11 LGTH	J12 NO	J12 LGTH	J13 NO	J13 LGTH	J14 NO	J14 LGTH
375	1	2475	1	2700	1	2925	1	3150	1	3375	1	3475																
450	1	2700	1	2925	1	3150	1	3375	1	3600	1	3800	1	3875														
600	1	3250	1	3450	1	3675	1	3900	1	4125	1	4350	1	4550	1	4750												
750	1	3925	1	4150	1	4375	1	4600	1	4800	1	5025	1	5250	1	5475	1	5675	1	5800								
900	1	4600	1	4825	1	5050	1	5250	1	5475	1	5700	1	5925	1	6150	1	6350	1	6575	1	6750						
1050	1	5250	1	5475	1	5700	1	5900	1	6125	1	6350	1	6575	1	6800	1	7025	1	7250	1	7450	1	7700				
1200	1	5950	1	6150	1	6375	1	6600	1	6825	1	7025	1	7250	1	7475	1	7675	1	7900	1	8125	1	8350	1	8550	1	8700
1350	1	6725	1	6925	1	7150	1	7375	1	7575	1	7800	1	8025	1	8225	1	8450	1	8675	1	8900	1	9400	1	9625	1	9850
1500	1	7375	1	7600	1	7825	1	8025	1	8250	1	8475	1	8700	1	8900	1	9425	1	9650	1	9875	1	10075	1	10300	1	10525
1650	1	8075	1	8275	1	8500	1	8725	1	8950	1	9450	1	9675	1	9900	1	10125	1	10325	1	10550	1	10775	1	11000	1	11225
1800	1	8750	1	8975	1	9475	1	9700	1	9925	1	10150	1	10350	1	10575	1	10800	1	11025	1	11225	1	11450	1	11675	1	11875
2100	1	10425	1	10650	1	10875	1	11075	1	11300	1	11525	1	11750	1	11975	1	12175	1	12400	1	12625	1	12850	1	13050	1	13275
2400	1	11875	1	12100	1	12325	1	12525	1	12750	1	12975	1	13200	1	13425	1	13625	1	13850	1	14075	1	14300	1	14500	1	14725
2700	1	13275	1	13500	1	13725	1	13950	1	14150	1	14375	1	14600	1	14825	1	15025	1	15250	1	15475	1	15700	1	15900	1	16125

REINFORCING STEEL (J15–J28) / PAY QTY 1-HEADWALL

PIPE DIA	J15 NO	J15 LGTH	J16 NO	J16 LGTH	J17 NO	J17 LGTH	J18 NO	J18 LGTH	J19 NO	J19 LGTH	J20 NO	J20 LGTH	J21 NO	J21 LGTH	J22 NO	J22 LGTH	J23 NO	J23 LGTH	J24 NO	J24 LGTH	J25 NO	J25 LGTH	J26 NO	J26 LGTH	J27 NO	J27 LGTH	J28 NO	J28 LGTH	CONC (m^3)	STEEL (kg)
375																													1.35	79
450																													1.68	95
600																													2.43	126
750																													3.32	171
900																													4.37	229
1050																													5.51	282
1200																													6.86	357
1350	1	10050																											8.30	433
1500	1	10725	1	10950	1	11075																							10.02	518
1650	1	11425	1	11650	1	11875	1	12100	1	12200																			13.41	646
1800	1	12100	1	12325	1	12550	1	12750	1	12975	1	13175																	16.75	764
2100	1	13500	1	13700	1	13925	1	14150	1	14375	1	14575	1	14800	1	15025	1	15125											19.48	1018
2400	1	14950	1	15150	1	15375	1	15600	1	15825	1	16025	1	16250	1	16475	1	16700	1	16900	1	17125							28.91	1285
2700	1	16350	1	16550	1	16775	1	17000	1	17225	1	17425	1	17650	1	17875	1	18400	1	18600	1	18825	1	19050	1	19250	1	19475	38.11	1691

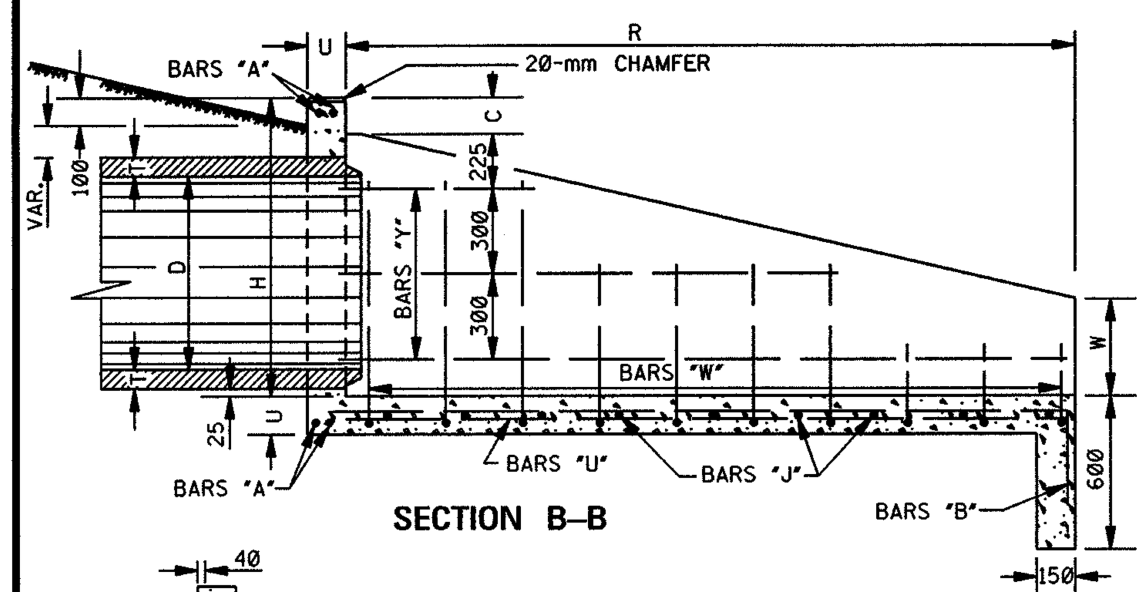

SECTION B–B

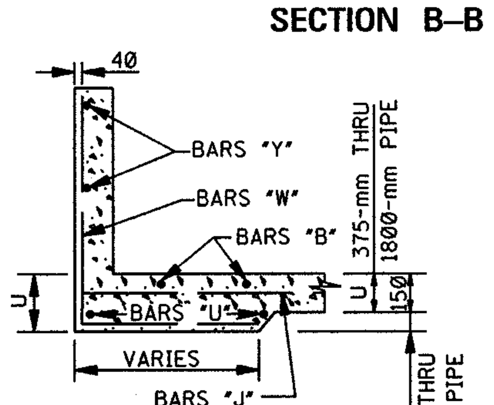

SECTION A–A

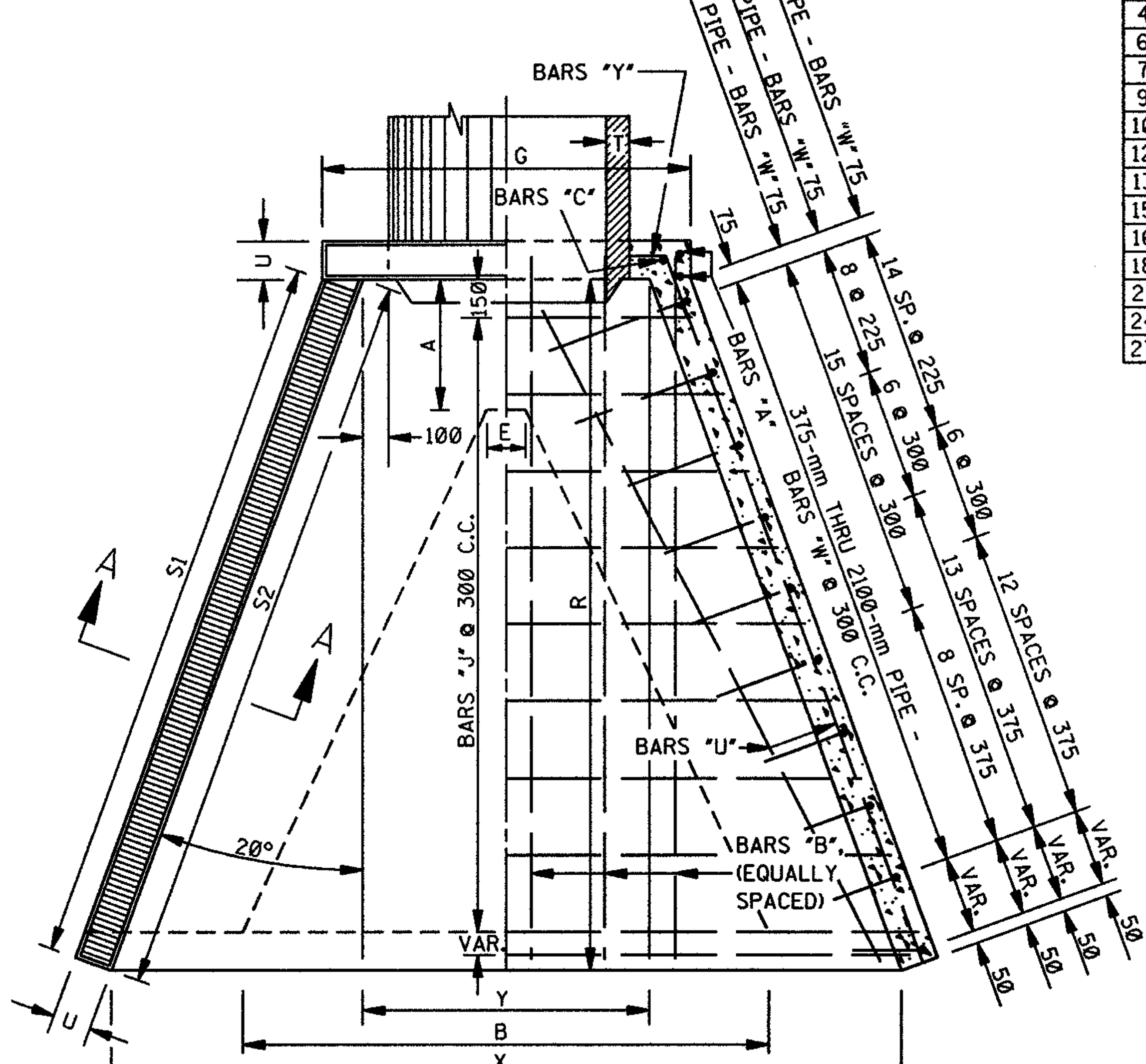

PLAN

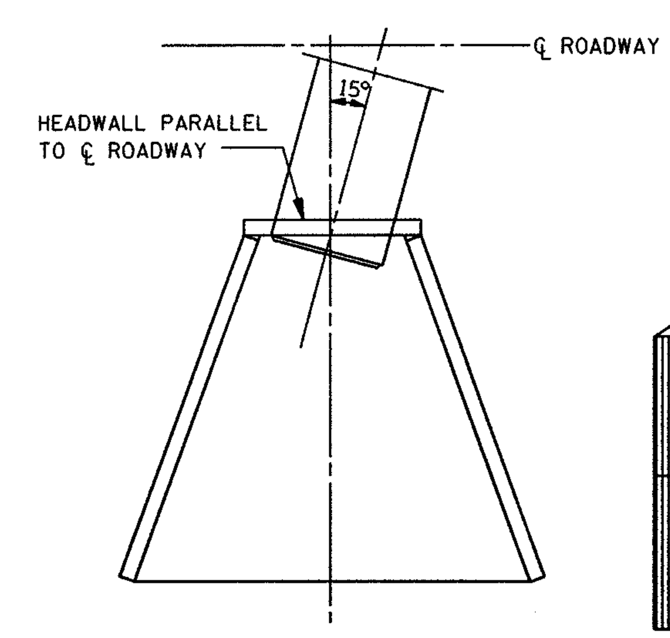

15° SKEW INSTALLATION PLAN

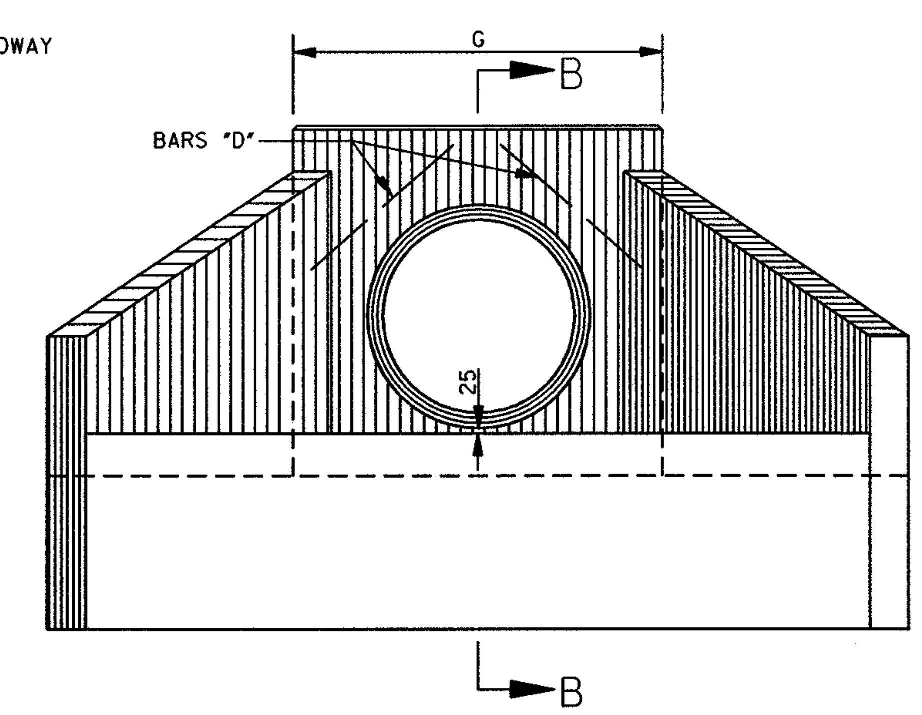

FRONT ELEVATION

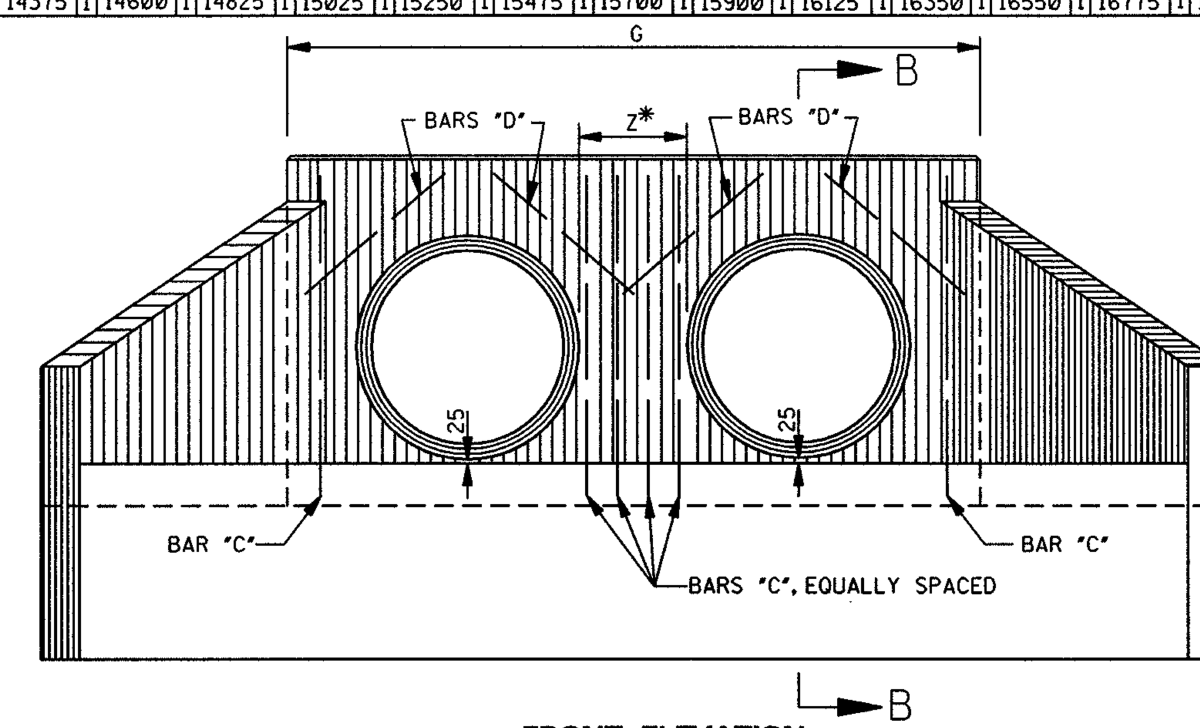

FRONT ELEVATION

*NOTE: MEASURE NORMAL (PERPENDICULAR) TO PIPE.

ALL DIMENSIONS ARE IN MILLIMETERS (mm) EXCEPT WHERE NOTED.

REVISION	BY	DATE

MISSISSIPPI DEPARTMENT OF TRANSPORTATION
ROADWAY DESIGN DIVISION
STANDARD PLAN

HEADWALLS FOR CONCRETE PIPE 1:4 SLOPE – 0°– 15° SKEW

DEPARTMENT OF TRANSPORTATION · METRIC · MISSISSIPPI

WORKING NUMBER HW-1400

ISSUE DATE: OCTOBER 1, 1998

SHEET NUMBER 346