STATE	PROJECT NO.
MISS.	

DIMENSIONS AND REINFORCING COMMON TO FLARED HEADWALLS FOR SINGLE, DOUBLE AND TRIPLE LINE PIPE CULVERTS

PIPE DIA	MIN THK "T"	DIMENSIONS C	H	R	S1	S2	U	W	REINFORCING STEEL US NO	US LGTH	UL NO	UL LGTH	W1 S NO	W1 L NO	W1 SIZE	W1 X	W1 X1	W1 LGTH	W2 S NO	W2 L NO	W2 SIZE	W2 X	W2 X1	W2 LGTH
375	57	175	725	775	1290	1550	150	200	2	775	2	1250	2	3	#13	325	500	825	2	2	#13	300	300	600
450	63	175	840	900	1540	1800	150	250	2	900	2	1500	2	3	#13	375	600	975	2	3	#13	300	300	600
600	75	175	1015	1150	2040	2300	150	300	2	1150	2	1975	2	3	#13	500	775	1275	2	4	#13	400	475	875
750	88	175	1190	1350	2440	2700	150	375	2	1350	2	2400	2	3	#13	625	950	1575	2	4	#13	475	650	1125
900	100	190	1365	1575	2890	3150	150	425	2	1575	2	2850	2	3	#16	725	1125	1850	2	4	#13	600	825	1425
1050	113	190	1540	1775	3290	3550	150	500	2	1775	2	3225	2	3	#16	875	1300	2175	2	4	#13	675	1000	1675
1200	125	190	1715	2000	3740	4000	150	565	2	2000	2	3700	2	3	#16	925	1450	2375	2	4	#16	800	1150	1950
1350	138	200	1890	2200	4140	4400	150	625	2	2200	2	4100	2	3	#16	1050	1600	2650	2	4	#16	900	1300	2200
1500	150	200	2065	2450	4640	4900	150	675	2	2450	2	4600	2	3	#16	1150	1775	2925	2	4	#16	975	1475	2450
1650	163	200	2275	2750	5220	5500	165	765	2	2750	2	5175	2	3	#19	1275	2000	3275	2	4	#16	1100	1700	2800
1800	175	200	2450	2950	5600	5900	175	825	2	2950	2	5550	2	3	#19	1425	2225	3650	2	4	#19	1250	1925	3175
2100	200	200	2800	3350	6355	6700	200	950	2	3350	2	6300	2	3	#19	1625	2575	4200	2	4	#19	1550	2275	3825
2400	225	200	3125	3775	7205	7550	200	1050	2	3775	2	7150	2	3	#22	1675	2850	4525	1	4	#22	1675	2550	4225
2700	250	200	3475	4225	8060	8450	225	1200	2	4225	2	8000	2	4	#22	1925	3225	5150	2	5	#22	1925	2925	4850

PIPE DIA	W3 S NO	W3 L NO	W3 SIZE	W3 X	W3 X1	W3 LGTH	W4 S NO	W4 L NO	W4 SIZE	W4 X	W4 X1	W4 LGTH	W5 S NO	W5 L NO	W5 SIZE	W5 X	W5 X1	W5 LGTH	W6 S NO	W6 L NO	W6 SIZE	W6 X	W6 X1	W6 LGTH	W7 S NO	W7 L NO	W7 SIZE	W7 X	W7 X1	W7 LGTH	W8 S NO	W8 L NO	W8 SIZE	W8 X	W8 X1	W8 LGTH
375																																				
450																																				
600	1	1	#13	300	350	650																														
750	2	2	#13	325	375	700																														
900	2	3	#13	350	525	875																														
1050	2	4	#13	475	700	1175	1	1	#13	350	550	900																								
1200	2	4	#13	550	850	1400	2	2	#13	375	600	975																								
1350	2	4	#13	675	1000	1675	2	3	#13	475	700	1175																								
1500	2	4	#16	750	1175	1925	2	3	#13	550	875	1425	1	2	#13	500	725	1225																		
1650	2	4	#16	950	1400	2350	2	3	#16	775	1100	1875	2	4	#13	550	800	1350																		
1800	2	4	#16	1050	1625	2675	2	3	#16	850	1325	2175	2	4	#13	600	1025	1625	1	1	#13	525	900	1425												
2100	2	4	#19	1350	1975	3325	2	3	#16	1125	1675	2800	2	4	#16	950	1375	2325	2	4	#16	750	1075	1825												
2400	3	4	#19	1500	2250	3750	2	3	#16	1300	1950	3250	1	3	#16	1100	1650	2750	2	3	#16	900	1350	2250	2	3	#16	675	1000	1675						
2700	2	4	#22	1750	2625	4375	2	3	#19	1550	2325	3875	2	3	#16	1350	2025	3375	1	3	#16	1150	1725	2875	2	4	#16	950	1425	2375	1	1	#16	850	1325	2175

PIPE DIA	YS1 NO	YS1 LGTH	YS2 NO	YS2 LGTH	YS3 NO	YS3 LGTH	YS4 NO	YS4 LGTH	YS5 NO	YS5 LGTH	YS6 NO	YS6 LGTH	YS7 NO	YS7 LGTH	YS8 NO	YS8 LGTH	YL1 NO	YL1 LGTH	YL2 NO	YL2 LGTH	YL3 NO	YL3 LGTH	YL4 NO	YL4 LGTH	YL5 NO	YL5 LGTH	YL6 NO	YL6 LGTH	YL7 NO	YL7 LGTH	YL8 NO	YL8 LGTH
375	1	700	1	1025													1	1125	1	1625												
450	1	700	1	1150													1	1125	1	1875												
600	1	700	1	1300	1	1400											1	1125	1	2325	1	2375										
750	1	700	1	1300	1	1600											1	1125	1	2325	1	2775										
900	1	700	1	1300	2	1825											1	1125	1	2325	2	3225										
1050	1	700	1	1300	1	1900	1	2025									1	1125	1	2325	1	3525	1	3625								
1200	1	700	1	1300	1	1900	2	2250									1	1125	1	2325	1	3525	2	4075								
1350	1	700	1	1300	1	1900	3	2450									1	1125	1	2325	1	3525	1	4425	1	4475						
1500	1	700	1	1300	1	1900	1	2500	2	2700							1	1125	1	2325	1	3525	1	4425	2	4975						
1650	1	700	1	1300	1	1900	1	2500	3	3000							1	1175	1	2375	1	3525	1	4475	3	5625						
1800	1	700	1	1300	1	1900	1	2500	1	3100	2	3200					1	1175	1	2375	1	3575	1	4475	1	5675	2	6000				
2100	1	700	1	1300	1	1900	1	2500	1	3100	3	3600					1	1225	1	2425	1	3625	1	4525	1	5725	3	6800				
2400	1	700	1	1000	1	1900	1	2500	1	2875	1	3625	3	4025			1	1225	1	2425	1	3625	1	4525	1	5650	1	5875	3	7650		
2700	1	675	1	1125	1	1725	1	2325	1	3075	1	3450	1	4200	4	4500	1	1275	1	2400	1	3600	1	4500	1	5625	1	6750	1	8250	4	8850

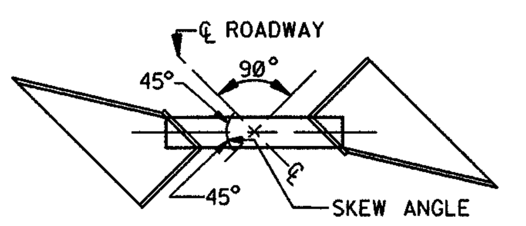

INSTALLATION

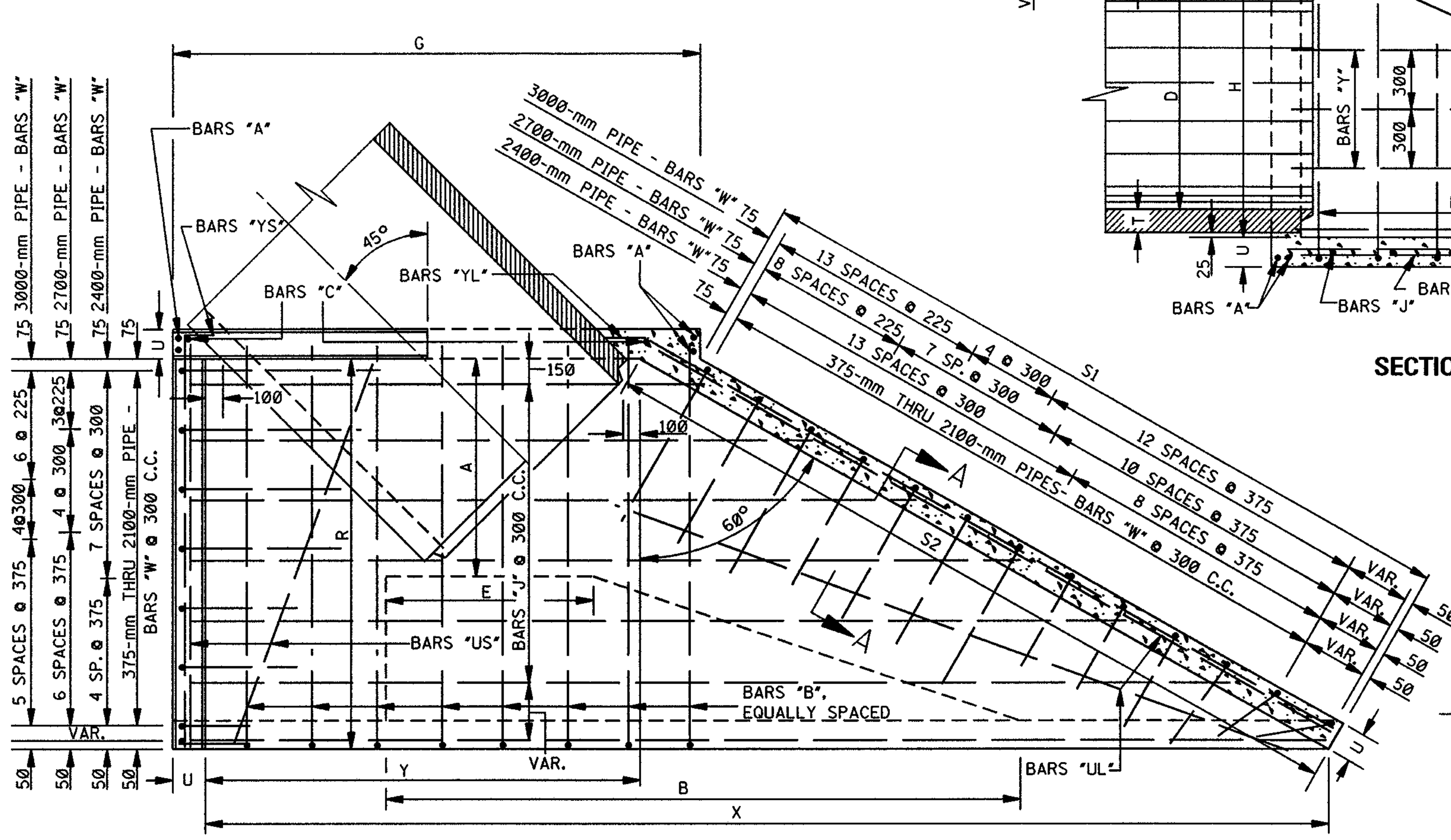

PLAN

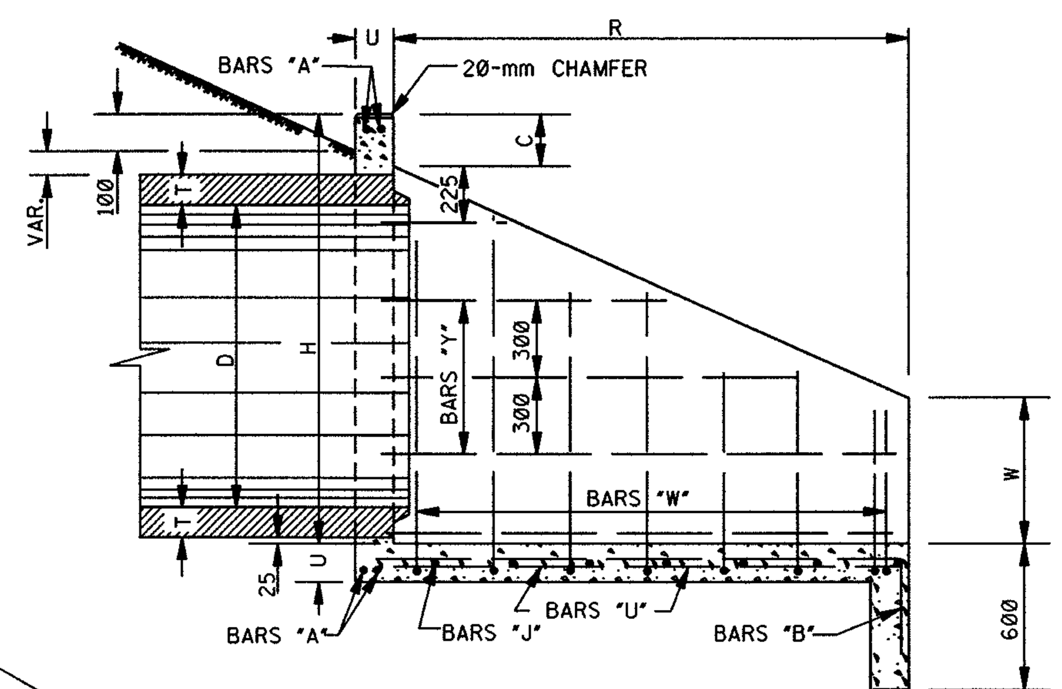

SECTION B–B

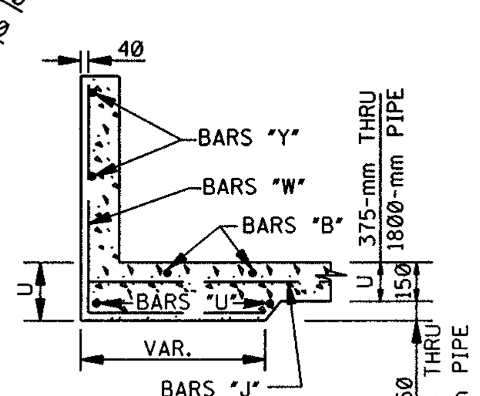

SECTION A–A

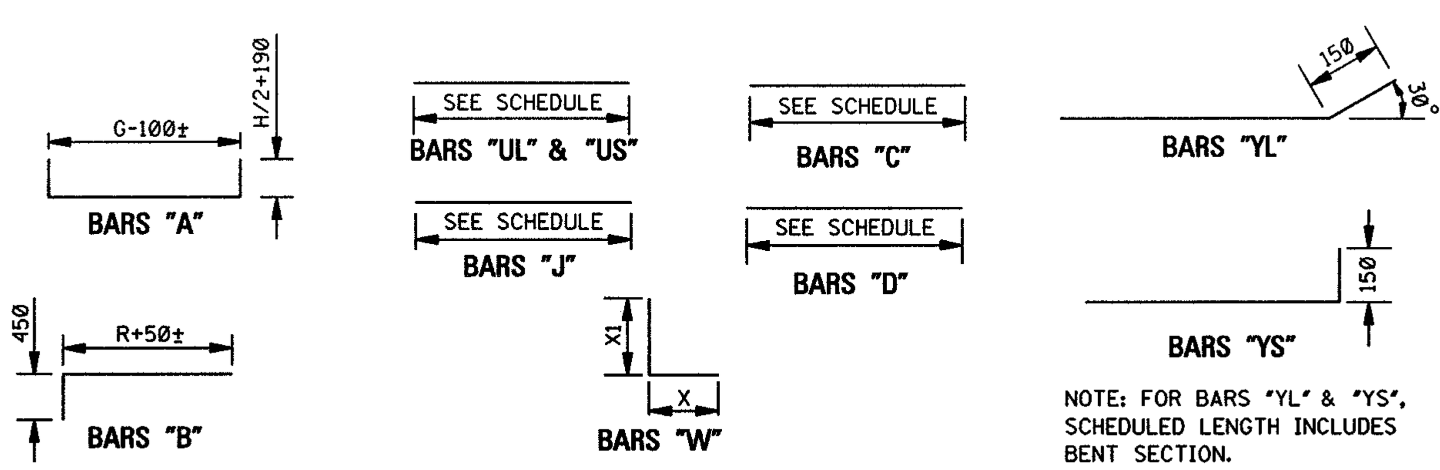

BAR BENDING DETAILS

NOTE: WHENEVER THE COMPUTED LENGTH OF BAR EXCEEDS 9000 mm, THE SCHEDULED LENGTH INCLUDES A 300-mm LAP. ALL BARS ARE #13 EXCEPT BARS "W". SEE SCHEDULE FOR SIZE OF BARS "W". IN BAR DESIGNATIONS (e.g. "YS" & "YL"), S DENOTES SHORT WING AND L DENOTES LONG WING.

GENERAL NOTES:

1. SPECIFICATIONS: MISSISSIPPI DEPARTMENT OF TRANSPORTATION, LATEST EDITION.
2. ALL CONCRETE SHALL BE CLASS "B".
3. ALL EXPOSED EDGES SHALL BE CHAMFERED 20 mm.
4. EXPOSED CONCRETE SURFACES SHALL BE FINISHED IN ACCORDANCE WITH THE APPLICABLE SECTION OF THE MDOT SPECIFICATIONS.
5. ALL LENGTHS AND QUANTITIES IN THE TABLES HEREON ARE BASED ON CONCRETE PIPE.
6. QUANTITIES SHOWN SHALL BE THE BASIS FOR FINAL PAYMENT UNLESS AUTHORIZED MODIFICATIONS ARE MADE.

DIMENSIONS AND REINFORCING FOR FLARED HEADWALL FOR SINGLE LINE PIPE CULVERT

PIPE DIA	DIMENSIONS A	B	E	G	X	Y	Z	REINFORCING STEEL A NO	A LGTH	B NO	B LGTH	C NO	C LGTH	D NO	D LGTH	PAY QTY 1-HEADWALL CONC (m³)	STEEL (kg)
375	-	-	-	1320	2215	870	-	4	2325	5	1275	2	800	2	550	0.65	39
450	-	-	-	1430	2540	980	-	4	2550	5	1400	2	900	2	600	0.83	46
600	-	-	-	1675	3215	1225	-	4	2970	6	1650	2	1075	2	675	1.19	63
750	-	-	-	1940	3830	1490	-	4	3410	7	1850	2	1250	2	750	1.57	80
900	-	-	-	2170	4450	1720	-	4	3815	8	2075	2	1425	2	825	2.01	109
1050	-	-	-	2420	5040	1970	-	4	4240	8	2275	2	1600	2	900	2.49	130
1200	-	-	-	2665	5680	2215	-	4	4660	9	2500	2	1775	2	975	3.05	160
1350	-	-	-	2945	6305	2495	-	4	5115	10	2700	2	1950	2	1050	3.64	188
1500	-	-	-	3195	6990	2745	-	4	5540	11	2950	2	2125	2	1125	4.35	230
1650	-	-	-	3480	7755	2990	-	4	6035	12	3250	2	2350	2	1275	5.70	296
1800	-	-	-	3765	8350	3240	-	4	6495	13	3450	2	2550	2	1375	7.01	340
2100	950	5800	900	4340	9540	3740	-	4	7420	15	3850	2	2900	2	1575	9.81	464
2400	1050	6550	900	4830	10770	4230	-	4	8235	17	4275	2	3225	2	1725	12.17	577
2700	1200	7325	900	5400	12045	4725	-	4	9455	19	4725	2	3600	2	1900	16.68	784

PIPE DIA	J1 NO	J1 LGTH	J2 NO	J2 LGTH	J3 NO	J3 LGTH	J4 NO	J4 LGTH	J5 NO	J5 LGTH	J6 NO	J6 LGTH	J7 NO	J7 LGTH	J8 NO	J8 LGTH	J9 NO	J9 LGTH	J10 NO	J10 LGTH	J11 NO	J11 LGTH	J12 NO	J12 LGTH	J13 NO	J13 LGTH	J14 NO	J14 LGTH
375	1	1475	1	2000	1	2400																						
450	1	1575	1	2100	1	2625	1	2700																				
600	1	1825	1	2350	1	2850	1	3375																				
750	1	2100	1	2625	1	3125	1	3650	1	4000																		
900	1	2325	1	2850	1	3350	1	3875	1	4400	1	4625																
1050	1	2575	1	3100	1	3600	1	4125	1	4650	1	5175	1	5225														
1200	1	2825	1	3350	1	3850	1	4400	1	4900	1	5425	1	5850														
1350	1	3100	1	3625	1	4125	1	4650	1	5175	1	5700	1	6225	1	6475												
1500	1	3350	1	3850	1	4400	1	4900	1	5425	1	5950	1	6475	1	6975	1	7150										
1650	1	3625	1	4150	1	4650	1	5175	1	5700	1	6225	1	6750	1	7275	1	7775	1	7950								
1800	1	3925	1	4450	1	4950	1	5475	1	6000	1	6525	1	7050	1	7575	1	8075	1	8550								
2100	1	4500	1	5025	1	5525	1	6050	1	6575	1	7100	1	7625	1	8125	1	8650	1	9475	1	10000	1	10050				
2400	1	4975	1	5500	1	6000	1	6525	1	7050	1	7575	1	8100	1	8600	1	9425	1	9950	1	10475	1	11000	1	11275		
2700	1	5550	1	6075	1	6600	1	7100	1	7625	1	8150	1	8650	1	9500	1	10000	1	10525	1	11050	1	11575	1	12075	1	12600

DIMENSIONS AND REINFORCING FOR FLARED HEADWALL FOR DOUBLE LINE PIPE CULVERT

PIPE DIA	DIMENSIONS A	B	E	G	X	Y	Z	REINFORCING STEEL A NO	A LGTH	B NO	B LGTH	C NO	C LGTH	D NO	D LGTH	PAY QTY 1-HEADWALL CONC (m³)	STEEL (kg)
375	-	-	-	2420	3315	1970	300	4	3425	8	1275	4	800	4	550	0.95	53
450	-	-	-	2630	3740	2180	300	4	3750	9	1400	4	900	4	600	1.20	65
600	-	-	-	3125	4665	2675	300	4	4420	11	1650	4	1075	4	675	1.70	87
750	-	-	-	3760	5645	3305	375	4	5230	13	1850	5	1250	4	750	2.29	113
900	-	-	-	4325	6605	3880	450	4	5970	15	2075	5	1425	4	825	2.97	150
1050	-	-	-	4930	7555	4480	525	4	6750	17	2275	5	1600	4	900	3.70	184
1200	-	-	-	5530	8545	5080	600	4	7525	19	2500	6	1775	4	975	4.57	225
1350	-	-	-	6200	9560	5750	675	4	8370	21	2700	6	1950	4	1050	5.49	267
1500	-	-	-	6800	10595	6355	750	4	9445	23	2950	7	2125	4	1125	6.58	327
1650	-	-	-	7440	11715	6950	825	4	10295	25	3250	8	2350	4	1275	8.59	412
1800	-	-	-	8080	12665	7555	900	4	11110	28	3450	8	2550	4	1375	10.59	473
2100	950	10825	5925	9355	14555	8755	1050	4	12735	32	3850	9	2900	4	1575	14.54	636
2400	1050	12275	6625	10555	16495	9960	1200	4	14260	36	4275	10	3225	4	1725	18.12	788
2700	1200	13750	7325	11835	18480	11160	1350	4	15890	40	4725	11	3600	4	1900	24.59	1035

PIPE DIA	J1 NO	J1 LGTH	J2 NO	J2 LGTH	J3 NO	J3 LGTH	J4 NO	J4 LGTH	J5 NO	J5 LGTH	J6 NO	J6 LGTH	J7 NO	J7 LGTH	J8 NO	J8 LGTH	J9 NO	J9 LGTH	J10 NO	J10 LGTH	J11 NO	J11 LGTH	J12 NO	J12 LGTH	J13 NO	J13 LGTH	J14 NO	J14 LGTH
375	1	2575	1	3100	1	3500																						
450	1	2775	1	3300	1	3825	1	3925																				
600	1	3275	1	3800	1	4325	1	4825																				
750	1	3900	1	4425	1	4925	1	5450	1	5825																		
900	1	4475	1	5000	1	5500	1	6025	1	6550	1	6775																
1050	1	5075	1	5600	1	6100	1	6625	1	7150	1	7675	1	7725														
1200	1	5675	1	6200	1	6700	1	7225	1	7750	1	8275	1	8725														
1350	1	6350	1	6875	1	7400	1	7900	1	8425	1	8950	1	9775	1	10025												
1500	1	6950	1	7475	1	8000	1	8500	1	9325	1	9850	1	10375	1	10900	1	11075										
1650	1	7575	1	8100	1	8625	1	9425	1	9950	1	10475	1	11000	1	11525	1	12025	1	12200								
1800	1	8225	1	8750	1	9575	1	10075	1	10600	1	11125	1	11650	1	12150	1	12675	1	13125								
2100	1	9800	1	10325	1	10850	1	11350	1	11875	1	12400	1	12925	1	13425	1	13950	1	14475	1	15000	1	15050				
2400	1	11000	1	11525	1	12050	1	12550	1	13075	1	13600	1	14125	1	14625	1	15150	1	15675	1	16200	1	16725	1	17000		
2700	1	12275	1	12800	1	13325	1	13825	1	14350	1	14875	1	15400	1	15900	1	16425	1	16950	1	17475	1	18000	1	18825	1	19050

DIMENSIONS AND REINFORCING FOR FLARED HEADWALL FOR TRIPLE LINE PIPE CULVERT

PIPE DIA	DIMENSIONS A	B	E	G	X	Y	Z	REINFORCING STEEL A NO	A LGTH	B NO	B LGTH	C NO	C LGTH	D NO	D LGTH	PAY QTY 1-HEADWALL CONC (m³)	STEEL (kg)
375	-	-	-	3515	4410	3065	300	4	4520	12	1275	6	800	6	550	1.27	69
450	-	-	-	3835	4945	3385	300	4	4955	13	1400	6	900	6	600	1.57	83
600	-	-	-	4575	6115	4125	300	4	5870	16	1650	6	1075	6	675	2.22	110
750	-	-	-	5580	7465	5125	375	4	7050	19	1850	8	1250	6	750	3.01	146
900	-	-	-	6480	8765	6035	450	4	8125	22	2075	8	1425	6	825	3.91	192
1050	-	-	-	7445	10065	6995	525	4	9565	25	2275	8	1600	6	900	4.92	239
1200	-	-	-	8390	11405	7940	600	4	10685	29	2500	10	1775	6	975	6.09	294
1350	-	-	-	9455	12815	9005	675	4	11925	32	2700	10	1950	6	1050	7.33	348
1500	-	-	-	10405	14200	9960	750	4	13050	35	2950	12	2125	6	1125	8.80	423
1650	-	-	-	11400	15675	10910	825	4	14255	39	3250	14	2350	6	1275	11.49	530
1800	-	-	-	12390	16975	11865	900	4	15420	42	3450	14	2550	6	1375	14.17	600
2100	950	15850	10950	14375	19575	13775	1050	4	17755	48	3850	16	2900	6	1575	19.27	802
2400	1050	18000	12350	16285	22225	15690	1200	4	20290	55	4275	18	3225	6	1725	24.06	999
2700	1200	20175	13750	18270	24915	17595	1350	4	22625	62	4725	20	3600	6	1900	32.50	1295

PIPE DIA	J1 NO	J1 LGTH	J2 NO	J2 LGTH	J3 NO	J3 LGTH	J4 NO	J4 LGTH	J5 NO	J5 LGTH	J6 NO	J6 LGTH	J7 NO	J7 LGTH	J8 NO	J8 LGTH	J9 NO	J9 LGTH	J10 NO	J10 LGTH	J11 NO	J11 LGTH	J12 NO	J12 LGTH	J13 NO	J13 LGTH	J14 NO	J14 LGTH
375	1	3675	1	4200	1	4600																						
450	1	3975	1	4500	1	5025	1	5125																				
600	1	4725	1	5250	1	5775	1	6275																				
750	1	5725	1	6250	1	6750	1	7275	1	7650																		
900	1	6625	1	7150	1	7650	1	8175	1	8700	1	8925																
1050	1	7600	1	8125	1	8625	1	9450	1	9975	1	10500	1	10550														
1200	1	8550	1	9375	1	9900	1	10400	1	10925	1	11450	1	11900														
1350	1	9900	1	10425	1	10925	1	11450	1	11975	1	12500	1	13025	1	13275												
1500	1	10850	1	11375	1	11900	1	12400	1	12925	1	13450	1	13975	1	14475	1	14650										
1650	1	11850	1	12375	1	12900	1	13400	1	13925	1	14450	1	14975	1	15500	1	16000	1	16175								
1800	1	12850	1	13375	1	13875	1	14400	1	14925	1	15450	1	15975	1	16500	1	17000	1	17475								
2100	1	14825	1	15350	1	15850	1	16400	1	16900	1	17425	1	17950	1	18750	1	19275	1	19800	1	20325	1	20375				
2400	1	16750	1	17275	1	17775	1	18600	1	19125	1	19650	1	20175	1	20700	1	21200	1	21725	1	22250	1	22750	1	23025		
2700	1	19025	1	19550	1	20075	1	20575	1	21100	1	21625	1	22150	1	22675	1	23175	1	23700	1	24225	1	24750	1	25250	1	25775

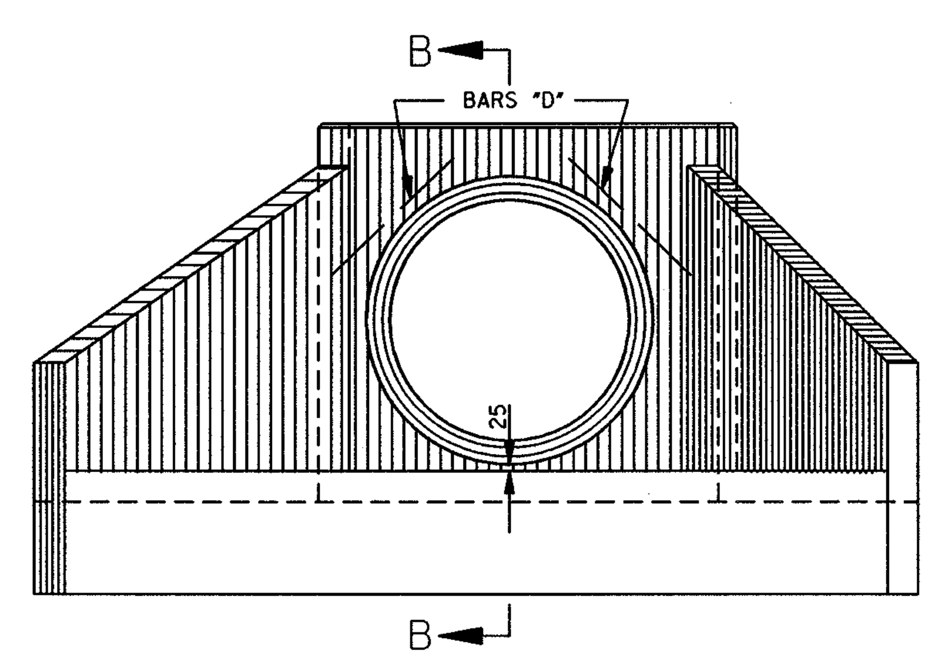

FRONT ELEVATION

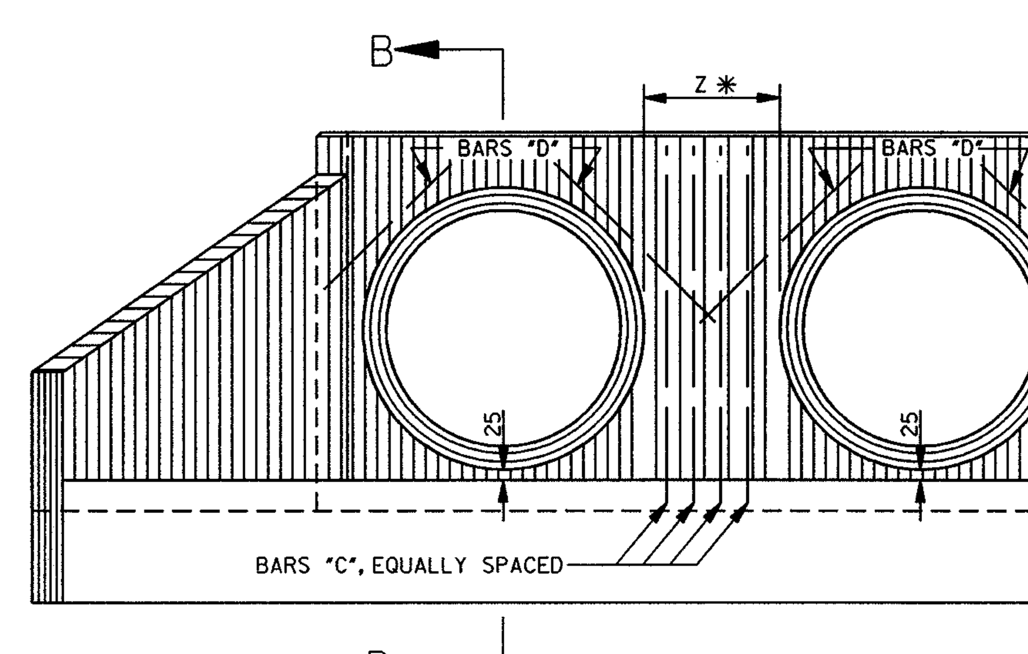

FRONT ELEVATION

*NOTE: MEASURE NORMAL (PERPENDICULAR) TO PIPE.

ALL DIMENSIONS ARE IN MILLIMETERS (mm) EXCEPT WHERE NOTED.

BY	MISSISSIPPI DEPARTMENT OF TRANSPORTATION ROADWAY DESIGN DIVISION STANDARD PLAN	
REVISION	**HEADWALLS FOR CONCRETE PIPE 1:2 SLOPE – 45° SKEW**	DEPARTMENT OF TRANSPORTATION METRIC MISSISSIPPI WORKING NUMBER HW-1245
DATE	ISSUE DATE: OCTOBER 1, 1998	SHEET NUMBER 342