STATE	PROJECT NO.
MISS.	

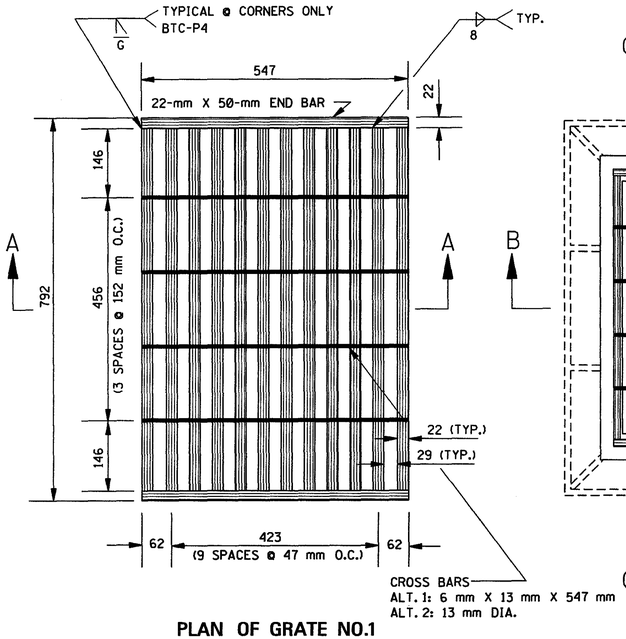

PLAN OF GRATE NO.1

NOTE: FOR OTHER GRATE DETAILS SEE SHEET IG-2.

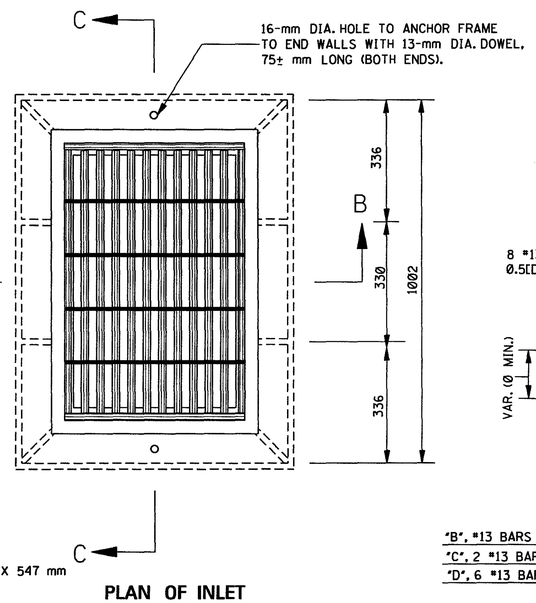

PLAN OF INLET

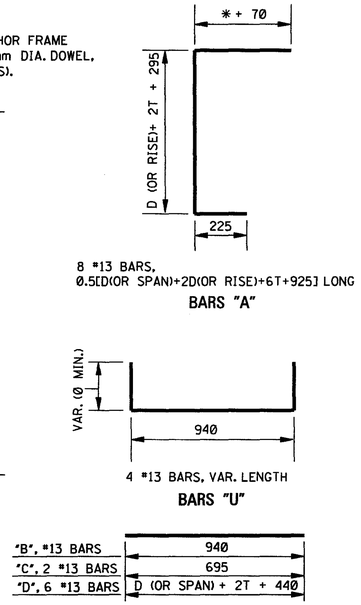

BAR DETAILS

*NOTE:

$$* \left[\frac{D\ (\text{OR SPAN}) + 2T - 255}{2}\right]$$

QUANTITIES

PIPE SIZE	MIN. DEPTH TO F.L.	MIN. DEPTH INLET CONC. (m^3)	MIN. DEPTH INLET STEEL (kg)	PIPE OPENING DEDUCTION (m^3)	T	BARS/SIZES "A" #13 NO. @ LGTH.	"B" #13 NO. @ LGTH.	"C" #13 NO. @ LGTH.	"D" #13 NO. @ LGTH.	"U" #13 NO. @ LGTH.
450	838	0.634	32.9	0.039	63	8 @ 1325	12 @ 940	2 @ 695	6 @ 1015	4 @ 940
600	1000	0.814	37.9	0.066	75	8 @ 1590	14 @ 940	2 @ 695	6 @ 1190	4 @ 940
750	1163	1.010	41.1	0.101	88	8 @ 1850	14 @ 940	2 @ 695	6 @ 1365	4 @ 940
900	1325	1.218	46.1	0.143	100	8 @ 2115	16 @ 940	2 @ 695	6 @ 1540	4 @ 940
1050	1488	1.442	51.1	0.192	113	8 @ 2375	18 @ 940	2 @ 695	6 @ 1715	4 @ 940
1200	1650	1.680	54.2	0.248	125	8 @ 2640	18 @ 940	2 @ 695	6 @ 1890	4 @ 940
1350	1813	1.932	59.2	0.311	138	8 @ 2900	20 @ 940	2 @ 695	6 @ 2065	4 @ 940
1500	1975	2.199	64.2	0.382	150	8 @ 3165	22 @ 940	2 @ 695	6 @ 2240	4 @ 940
1650	2138	2.480	67.3	0.459	163	8 @ 3425	22 @ 940	2 @ 695	6 @ 2415	4 @ 940
1800	2300	2.775	72.4	0.545	175	8 @ 3695	24 @ 940	2 @ 695	6 @ 2590	4 @ 940
560 X 345	733	0.623	33.2	0.039	63	8 @ 1275	12 @ 940	2 @ 695	6 @ 1125	4 @ 940
725 X 460	860	0.791	36.2	0.063	75	8 @ 1510	12 @ 940	2 @ 695	6 @ 1315	4 @ 940
920 X 570	983	0.990	41.3	0.094	88	8 @ 1755	14 @ 940	2 @ 695	6 @ 1535	4 @ 940
1110 X 675	1100	1.189	44.5	0.135	100	8 @ 1995	14 @ 940	2 @ 695	6 @ 1750	4 @ 940
1300 X 795	1233	1.416	49.6	0.179	113	8 @ 2245	16 @ 940	2 @ 695	6 @ 1965	4 @ 940
1485 X 915	1365	1.654	52.9	0.232	125	8 @ 2495	16 @ 940	2 @ 695	6 @ 2175	4 @ 940
1650 X 1015	1478	1.877	57.6	0.287	138	8 @ 2715	18 @ 940	2 @ 695	6 @ 2365	4 @ 940
1855 X 1145	1620	2.162	61.2	0.356	150	8 @ 2985	18 @ 940	2 @ 695	6 @ 2595	4 @ 940
2235 X 1370	1870	2.745	69.5	0.502	175	8 @ 3475	20 @ 940	2 @ 695	6 @ 3025	4 @ 940

NOTES:
1. ONE (1) PIPE OPENING HAS BEEN DEDUCTED FROM THE STRUCTURE.
2. FOR EACH ADDITIONAL METER OF INLET HEIGHT, ADD 0.447 m^3 CLASS "B" CONCRETE AND 23.3 kg REINFORCING STEEL.
3. 12 BARS "B" AND 6 BARS "C" REQUIRED PER EACH ADDITIONAL METER OF INLET HEIGHT.
4. MASS OF FRAME CASTING = 111 kg.
   MASS OF GRATE = SEE SHEET IG-2.

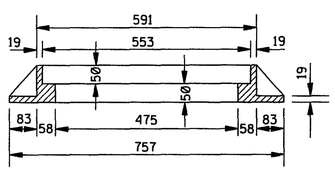

SECTION B–B
(FRAME)

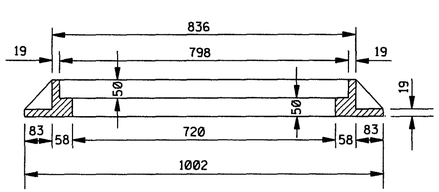

SECTION C–C
(FRAME)

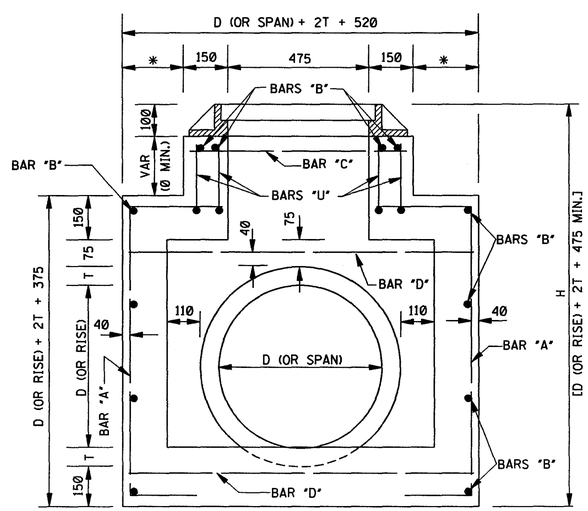

SECTION B–B

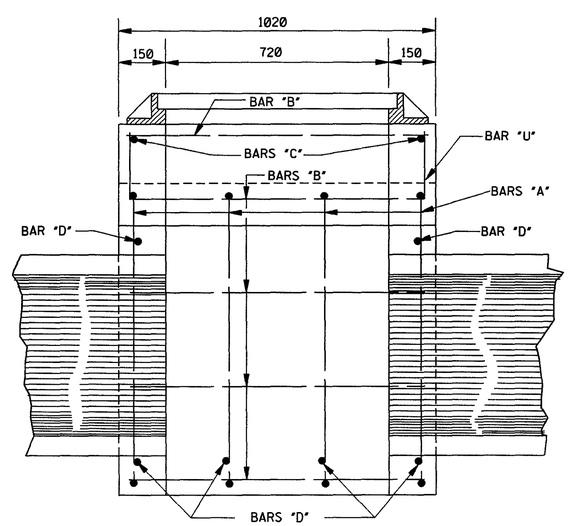

SECTION C–C

GENERAL NOTES:

1. QUANTITIES SHOWN WILL BE THE BASIS OF PAYMENT UNLESS AUTHORIZED MODIFICATIONS ARE MADE.
2. CONCRETE SHALL BE CLASS "B" CONCRETE AND REINFORCING STEEL SHALL BE DEFORMED BARS.
3. THE CONTRACTOR HAS THE OPTION TO PROVIDE GRATE NO. 1 OR GRATE NO. 2 AS SHOWN ON SHEET IG-2.
4. FRAME TO BE GRAY IRON CASTING, (AASHTO M 105, CLASS 30).

ALL DIMENSIONS ARE IN MILLIMETERS (mm) EXCEPT WHERE NOTED.

MISSISSIPPI DEPARTMENT OF TRANSPORTATION
ROADWAY DESIGN DIVISION
STANDARD PLAN

BY | REVISION | DATE

STORM SEWER INLET TYPE SS–3

METRIC

WORKING NUMBER SS-3

ISSUE DATE: OCTOBER 1, 1998

SHEET NUMBER 323