STATE	PROJECT NO.
MISS.	

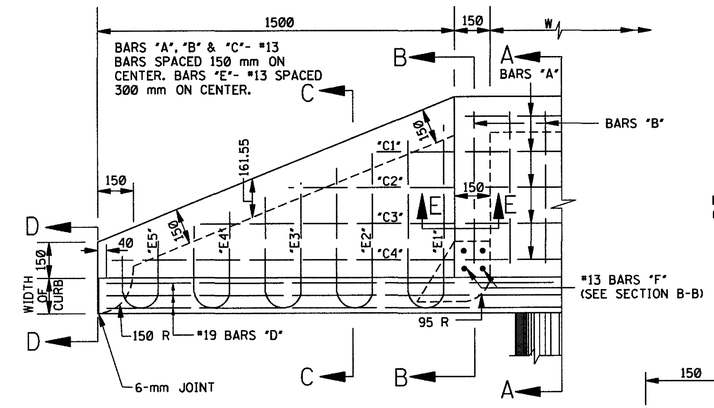

HALF PLAN

NOTE: SHOWS STEEL IN BOTH INLET & WING COVER. FOR METHOD OF ANCHORING INLET WINGS TO PAVEMENT, SEE SECTION C-C.

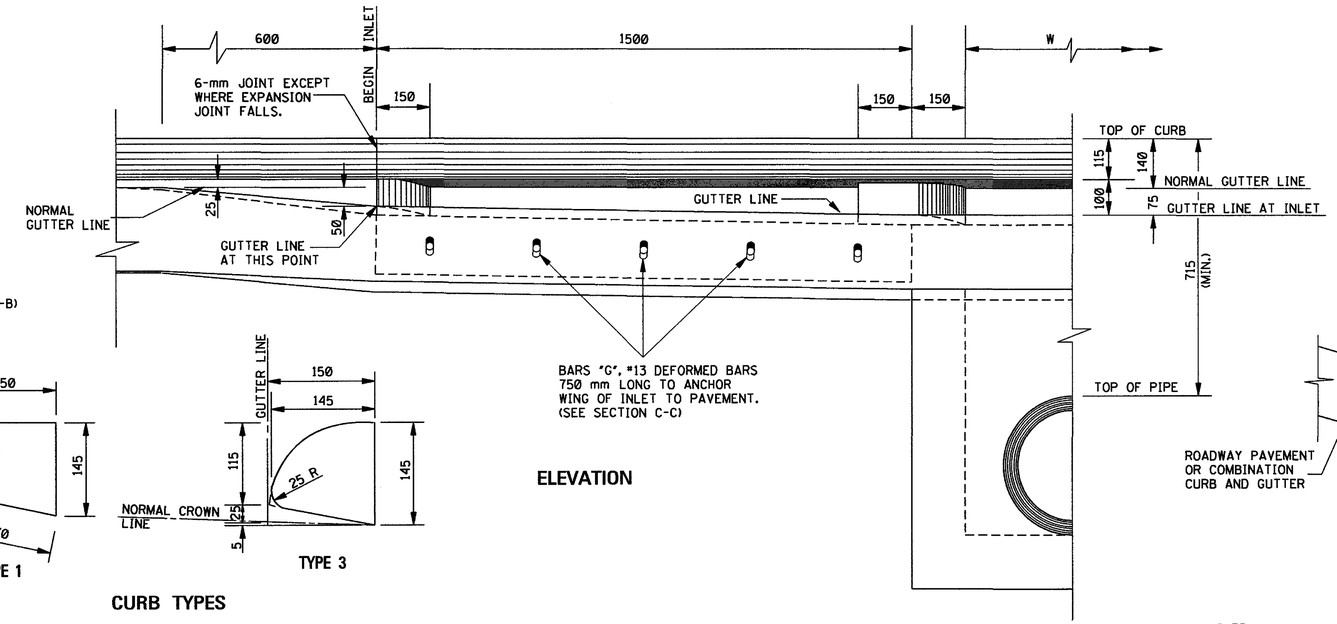

ELEVATION

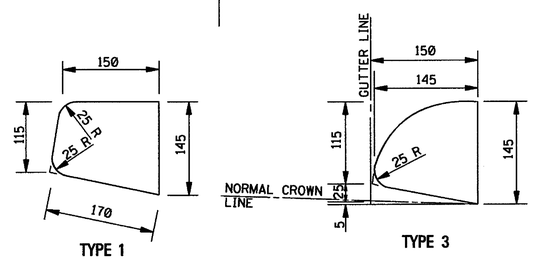

TYPE 1

TYPE 3

CURB TYPES

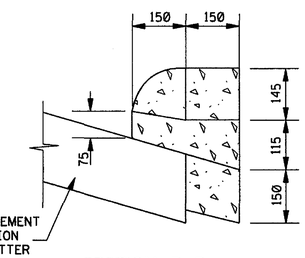

SECTION D–D

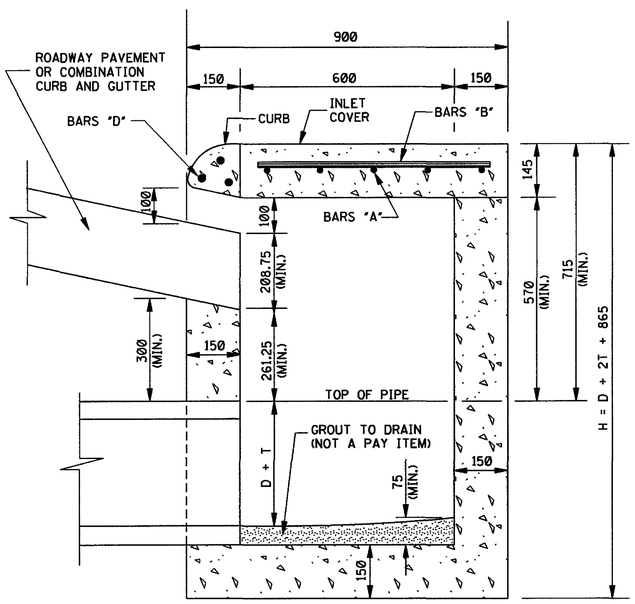

SECTION A–A

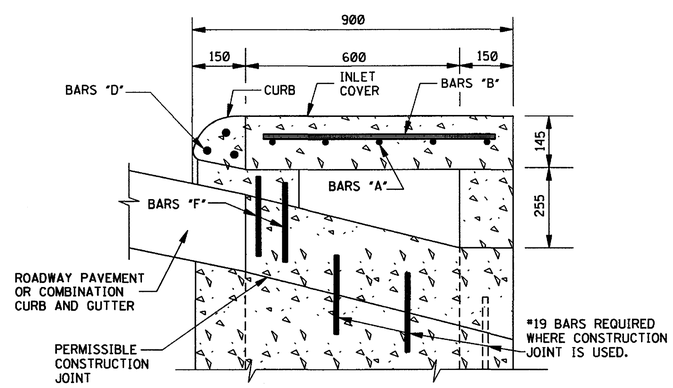

SECTION B–B

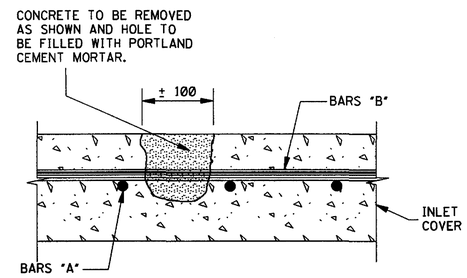

DETAIL SHOWING METHOD OF LIFTING INLET COVER

NOTE: CONCRETE TO BE REMOVED DEEPLY ENOUGH UNDER BAR "B" TO PERMIT ENTRANCE OF HOOK OR OTHER LIFTING DEVICE. (FOUR REQUIRED PER INLET COVER)

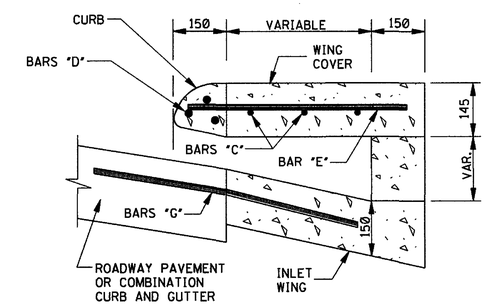

SECTION C–C

GENERAL NOTES:

1. MATERIALS AND WORKMANSHIP SHALL BE IN ACCORDANCE WITH THE STANDARD SPECIFICATIONS OF THE MISSISSIPPI DEPARTMENT OF TRANSPORTATION.
2. THE QUANTITIES SHOWN WILL BE USED AS THE BASIS FOR FINAL PAYMENT UNLESS AUTHORIZED MODIFICATIONS ARE MADE.

DIMENSIONS				QUANTITIES					STEEL IN INLET, CURB AND INLET COVER										STEEL IN BOTH WING COVERS		
MIN. HEIGHT H (mm)	WALL THICK T (mm)	DIA. OF PIPE D (mm)	W (mm)	MIN. DEPTH		EACH ADDED METER		DEDUCT FOR EACH OPENING (m^3)	BARS "A" #13		BARS "B" #13		BARS "D" #19		BARS "F" #13		BARS "G" #13				
				CONCRETE (m^3)	STEEL (kg)	CONCRETE (m^3)	STEEL (kg)		NO.	LGTH.	NO.	LGTH.	NO.	LGTH.	NO.	LGTH.	NO.	LGTH.	BAR	NO.	LGTH.
1265	50	300	600	1.116	61.9	0.450	NONE	0.019	5	800	6	650	3	3825	8	225	10	750	C1	2	375
1354	57	375	600	1.129	61.9	0.450	NONE	0.028	5	800	6	650	3	3825	8	225	10	750	C2	2	750
1441	63	450	675	1.166	62.3	0.473	NONE	0.039	5	875	6	650	3	3825	8	225	10	750	C3	2	1125
																			C4	2	1400
1615	75	600	850	1.271	65.3	0.525	NONE	0.066	5	1050	7	650	3	4050	8	225	10	750	E1	2	1700
																			E2	2	1450
1791	88	750	1025	1.358	67.8	0.578	NONE	0.101	5	1225	8	650	3	4200	8	225	10	750	E3	2	1200
1965	100	900	1200	1.457	70.4	0.630	NONE	0.143	5	1400	9	650	3	4350	8	225	10	750	E4	2	950
2315	125	1200	1550	1.646	76.6	0.735	NONE	0.248	5	1750	12	650	3	4725	8	225	10	750	E5	2	700

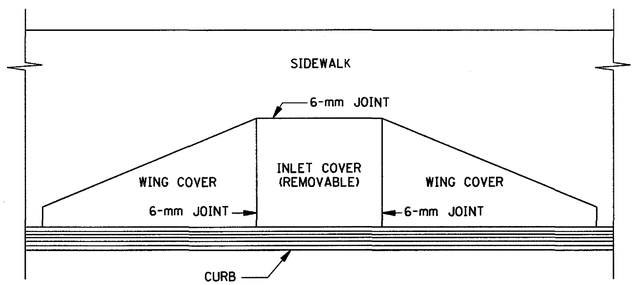

PLAN OF INLET AND ADJACENT SIDEWALK

ALL DIMENSIONS ARE IN MILLIMETERS (mm) EXCEPT WHERE NOTED.

DATE	REVISION	BY

MISSISSIPPI DEPARTMENT OF TRANSPORTATION
ROADWAY DESIGN DIVISION
STANDARD PLAN

STORM SEWER INLET TYPE SS-1A ADJACENT TO SIDEWALK

METRIC

WORKING NUMBER SS-1A

ISSUE DATE: OCTOBER 1, 1998

SHEET NUMBER 320