STATE	PROJECT NO.
MISS.	

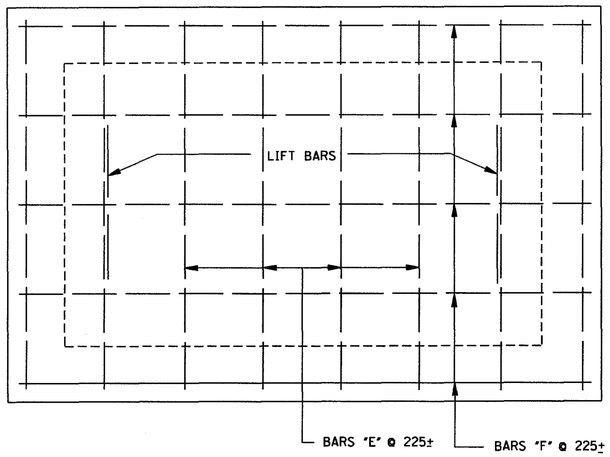

PLAN OF COVER

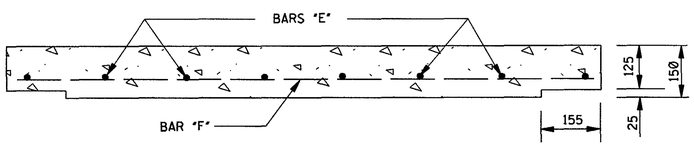

ELEVATION OF COVER

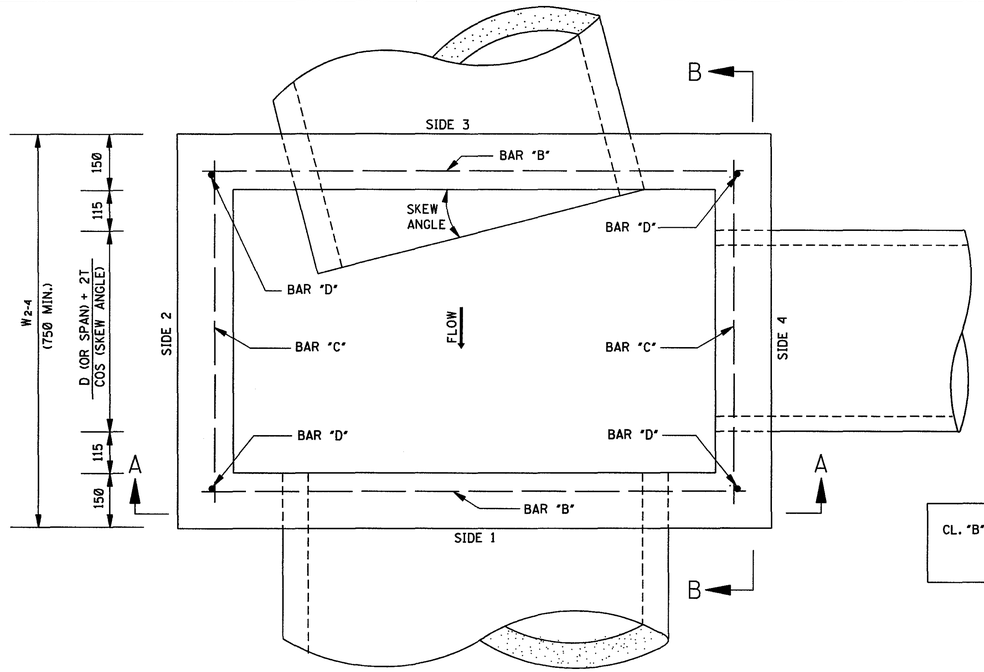

PLAN

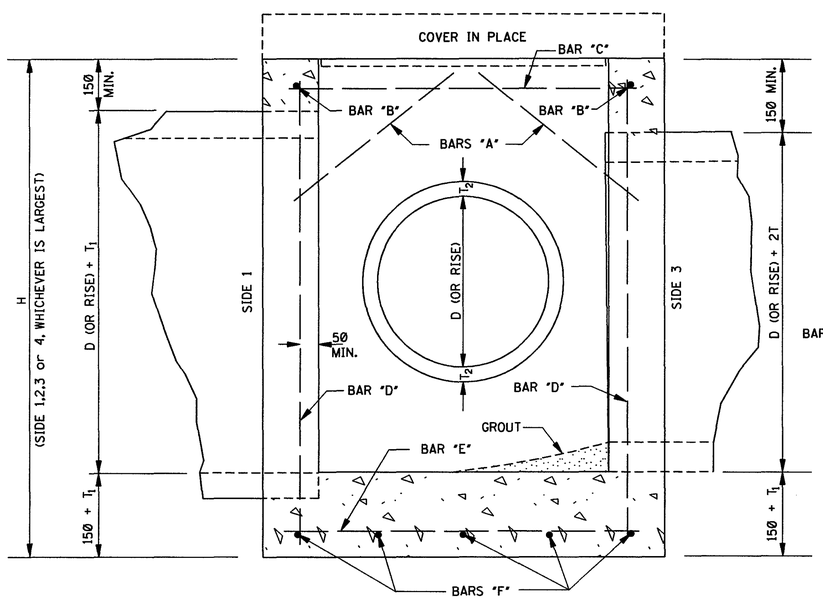

SECTION B–B

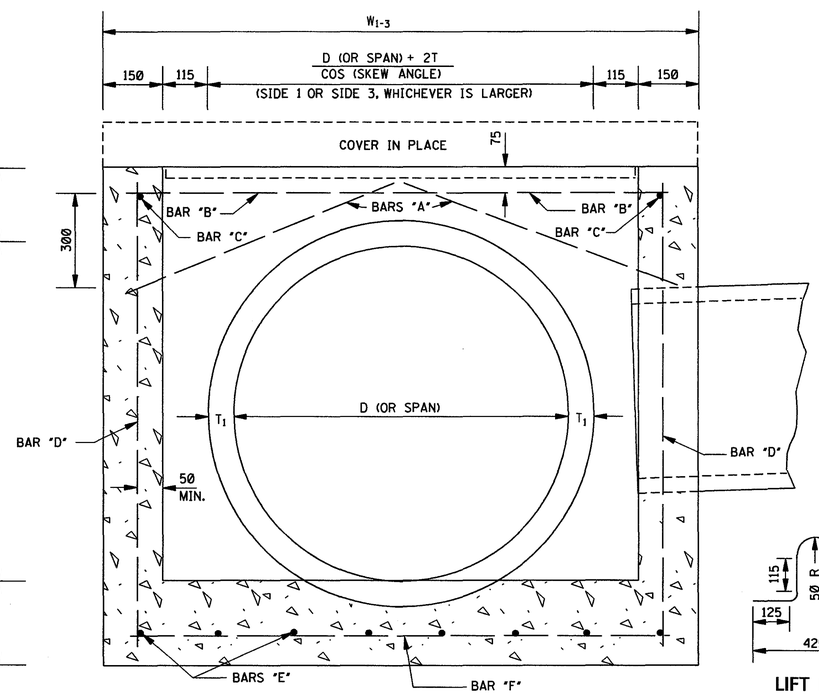

SECTION A–A

REINFORCING BAR LIST			
BAR	SIZE	NUMBER REQUIRED	LENGTH
A	#13	2 PER PIPE OPENING	$\sqrt{122\,500 + \left(\frac{W^*}{2} + 50\right)^2}$
B	#13	2	$W_{1-3} - 150$
C	#13	2	$W_{2-4} - 150$
D	#13	4	$H - 150$
E	#13	$2\left[\left(\frac{W_{1-3}}{225}\right)^{**} + 1\right]$	$W_{2-4} - 100$
F	#13	$2\left[\left(\frac{W_{2-4}}{225}\right)^{**} + 1\right]$	$W_{1-3} - 100$

NOTE: VARIABLES AND DESIGNATIONS ARE AS FOLLOWS:
D (OR SPAN) = PIPE DIAMETER (OR SPAN)
W_{1-3} = WIDTH OF SIDE 1 & SIDE 3
W_{2-4} = WIDTH OF SIDE 2 & SIDE 4
W^* = W_{1-3} OR W_{2-4} (SIDE OF ENTERING PIPE)
** = ROUND TO NEAREST WHOLE NUMBER

CL. "B" CONC. (m^3) = $[(Q1 + Q2) / 1 \times 10^9] - \sum$ PIPE OPENING DEDUCTIONS
WHERE: $Q1 = [125W_{1-3}W_{2-4}] + [25(W_{1-3} - 310)(W_{2-4} - 310)] + [(T_1 + 150)W_{1-3}W_{2-4}]$
$Q2 = 300[H - (T_1 + 150)][(W_{1-3} - 300) + W_{2-4}]$

COMMON PIPE SIZE						
CIRCULAR PIPE				ARCH PIPE		
PIPE SIZE	T	PIPE OPENING DEDUCTION (m^3)		PIPE SIZE	T	PIPE OPENING DEDUCTION (m^3)
450	63	0.039		560 X 345	63	0.039
600	75	0.066		725 X 460	75	0.063
750	88	0.101		920 X 570	88	0.094
900	100	0.143		1110 X 675	100	0.135
1050	113	0.192		1300 X 795	113	0.179
1200	125	0.248		1485 X 915	125	0.232
1350	138	0.311		1650 X 1015	138	0.287
1500	150	0.382		1855 X 1145	150	0.356
1650	163	0.459				
1800	175	0.545				

GENERAL NOTES:

1. REINFORCING STEEL QUANTITIES TO BE COMPUTED FROM BAR LIST AND SHOWN ELSEWHERE ON THE PLANS.
2. QUANTITIES FOR JUNCTION BOXES SHOWN ON THE PLANS WILL BE THE BASIS FOR PAYMENT UNLESS AUTHORIZED MODIFICATIONS ARE MADE.
3. CONCRETE SHALL BE CLASS "B" AND REINFORCING STEEL SHALL BE DEFORMED BARS.
4. SIDE 1 OF THE JUNCTION BOX WILL ALWAYS BE THE OUTFLOW SIDE.
5. IF PIPES ARE SKEWED MORE THAN 15° OR IF SKEWED PIPES PRODUCE CONFLICTS WITH ANOTHER OPENING, THE PIPE SHALL BE BROKEN BACK TO THE WALL OF THE JUNCTION BOX.

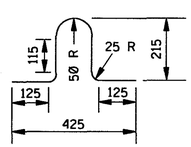

LIFT BAR

NOTE: LIFT BAR TO BE FABRICATED FROM A #13 BAR 750 mm LONG. TWO LIFT BARS ARE REQUIRED. REINFORCING STEEL FOR 2 LIFT BARS = 1.5 kg.

ALL DIMENSIONS ARE IN MILLIMETERS (mm) EXCEPT WHERE NOTED.

DATE	REVISION	BY

MISSISSIPPI DEPARTMENT OF TRANSPORTATION
ROADWAY DESIGN DIVISION
STANDARD PLAN

JUNCTION BOX FOR PIPE CULVERTS

METRIC

WORKING NUMBER JB-1

ISSUE DATE: OCTOBER 1, 1998

SHEET NUMBER 302