STATE	PROJECT NO.
MISS.	

CORRUGATED STEEL AND ALUMINUM PIPE (ROUND) MS-18 LOADING

PIPE DIAMETER (mm)	MINIMUM COVER FROM TOP OF PIPE TO TOP OF SUBGRADE (mm)	MAXIMUM FILL HEIGHT ABOVE TOP OF PIPE (m) — SHEET THICKNESS (mm)				
		1.63 STEEL 1.52 ALUM.	2.01 STEEL 1.91 ALUM.	2.77 STEEL 2.67 ALUM.	3.51 STEEL 3.43 ALUM.	4.27 STEEL 4.17 ALUM.
		68 X 13-mm CORRUGATED STEEL RIVETED, WELDED OR HELICAL /	75 X 25-mm OR 125 X 25-mm CORRUGATED STEEL RIVETED, WELDED, HELICAL OR BOLTED			/ 68 X 13-mm CORRUGATED ALUMINUM RIVETED OR HELICAL
300	300	25.6/ - /13.7	27.7/ - /13.7	- / - /23.8	- / - /24.7	- / - /25.6
375	300	20.4/ - / -	22.3/ - / -	- / - / -	- / - / -	- / - / -
450	300	17.1/ - / 9.1	18.6/ - / 9.1	- / - /15.8	- / - /16.5	- / - /17.1
600	300	12.8/ - / 6.7	14.0/ - / 6.7	18.0/ - /11.9	- / - /12.5	- / - /12.8
750	300	10.4/ - / 5.5	11.0/ - / 5.5	14.3/ - / 9.4	- / - / 9.8	- / - /10.4
900	300	8.5 / 14.6 / 4.6	9.1 /18.3/ 4.6	11.9 /23.8/ 7.9	12.5 /27.1 / 8.2	- /30.8/ 8.5
1050	300	9.4 / 12.5 / -	13.1 /15.5/ 7.9	14.0 /19.5/ 13.1	14.6 /21.6 / 13.1	15.2/ 24.1 /13.4
1200	300	8.2 / 11.0 / -	11.3 /13.7/ -	13.7 /17.4/ 12.2	14.0 /18.6 /12.5	14.3/ 20.1 /13.1
1350	300	- / 9.8 / -	10.1 /12.2/ -	13.1 /15.8/ 10.7	13.4 /16.8 / 11.3	13.7/ 18.0 /11.6
1500	300	- / 8.8 / -	- /11.0/ -	13.1 /14.9/ -	13.1 /15.5 /10.1	13.4/ 16.5 /10.4
1650	300	- / 7.9 / -	- /10.1/ -	12.8 /14.3/ -	13.1 /14.9/ 9.1	13.1/ 15.5 / 9.4
1800	300	- / 7.3 / -	- / 9.1 / -	- /13.4/ -	12.5 /14.3/ -	13.1/ 14.9 / 8.8
1950	300	- / 6.7 / -	- / 8.5 / -	- /12.5/ -	- /14.0/ -	11.9/ 14.3/ -
2100	300	- / 6.4 / -	- / 7.9 / -	- /11.6/ -	- /13.7/ -	10.7/ 14.0/ -
2250	300	- / 5.8 / -	- / 7.3 / -	- /10.7/ -	- /13.1/ -	- /13.7/ -
2400	300	- / 5.5 / -	- / 6.7 / -	- /10.1/ -	- /12.2/ -	- /13.4/ -
2550	600	- / 5.2 / -	- / 6.4 / -	- / 9.4 / -	- /11.6/ -	- /12.8/ -
2700	600	- / - / -	- / 6.1 / -	- / 9.1 / -	- /10.7/ -	- /11.9/ -
2850	600	- / - / -	- / 5.8 / -	- / 8.5 / -	- /10.4/ -	- /11.3/ -
3000	600	- / - / -	- / - / -	- / 8.2 / -	- / 9.8 / -	- /10.7/ -

NOTE: THE AVERAGE INSIDE DIAMETER SHALL NOT VARY MORE THAN ONE (1) PERCENT OR 13 mm, WHICHEVER IS GREATER, FROM THE NOMINAL DIAMETER WHEN MEASURED ON THE INSIDE CREST OF THE CORRUGATIONS (AASHTO M 36M/M 36 & AASHTO M 196M/M 196).

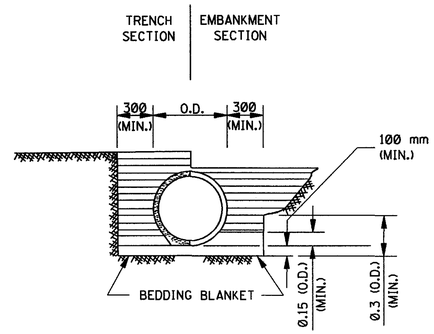

CLASS B

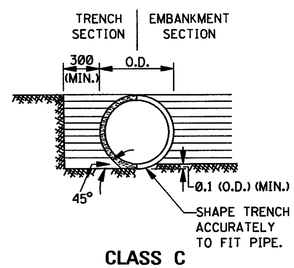

CLASS C

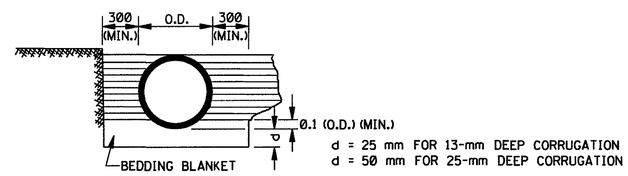

CLASS C MODIFIED

MAXIMUM HEIGHT OF FILL OVER REINFORCED CONCRETE PIPE

CLASS OF PIPE	TYPE OF BACKFILL	MAXIMUM COVER (m) CLASS "C" BEDDING	MAXIMUM COVER (m) CLASS "B" BEDDING
III	NORMAL	4.8	-
IV	NORMAL	7.0	8.5
V	NORMAL	9.1	10.9
IV	IMPERFECT	-	27.4
V	IMPERFECT	-	35.0

NOTE: CLASS OF PIPE AND BEDDING TO BE CONSISTENT THROUGHOUT THE PIPE LENGTH.

MAXIMUM HEIGHT OF FILL OVER CLASS 2 NONREINFORCED CONCRETE PIPE, PERFORATED AND/OR PLAIN, FOR UNDERDRAINS

PIPE SIZE (mm)	MAXIMUM COVER (m) BEDDING CLASS "C"/CLASS "B" — TRENCH			PROJECTING
	B_d (mm)	SAND & GRAVEL	DAMP CLAY	POSITIVE $p = 0.7$; $R_{sd} = 0.7$
100	600	*	*	10.3/12.8
150	600	*	*	7.6/9.1
200	675	*	4.8/ *	5.7/7.3
250	750	*	3.6/6.0	4.8/5.7
300	825	*	3.6/5.4	4.2/5.1

NOTES:
* 1. INDICATES NO LIMIT OF FILL HEIGHT (2100 kg/m^3).
2. TRENCH WIDTH (B_d) NO GREATER THAN 400 mm PLUS O.D.
3. FACTOR OF SAFETY IS 1.25 ON MINIMUM ULTIMATE STRENGTH.
4. MINIMUM COVER FOR HIGHWAY LOADS IS 450 mm.
5. PERFORATED PIPE SHALL BE TYPE 1.

CORRUGATED METAL PIPE ARCHES MS-18 LOADING

EQUIV. DIAMETER (mm)	PIPE DIMENSION (SPAN X RISE) (mm)	MINIMUM CORNER RADIUS (mm)	MINIMUM COVER FROM TOP OF PIPE TO TOP OF SUBGRADE FOR 192 kPa (mm)	STEEL — MINIMUM THICKNESS REQUIRED (mm)	STEEL — MAXIMUM FILL HEIGHT ABOVE TOP OF PIPE (m) FOR THE FOLLOWING CORNER BEARING PRESSURE (kPa) 192 kPa	STEEL — † 287 kPa	ALUMINUM — MINIMUM THICKNESS REQUIRED (mm)	ALUMINUM — MAXIMUM FILL HEIGHT ABOVE TOP OF PIPE (m) FOR THE FOLLOWING CORNER BEARING PRESSURE (kPa) 192 kPa	ALUMINUM — † 287 kPa
				68 X 13-mm CORRUGATION RIVETED, WELDED OR HELICAL			68 X 13-mm CORRUGATION RIVETED OR HELICAL		
375	430 X 330	75	450	1.63	4.0	4.6+	1.52	4.6	-
450	530 X 380	75	450	1.63	3.7	4.6+	1.52	4.3	-
600	710 X 510	75	450	1.63	3.0	4.6	1.52	3.0	4.6+
750	885 X 610	75	450	2.01	2.7	4.3	1.52	2.7	4.3
900	1060 X 740	90	450	2.01	2.7	4.0	1.91	2.7	4.0
1050	1240 X 840	100	450	2.01	2.4	3.7	2.67	2.4	3.7
1200	1440 X 970	130	450	2.77	2.4	3.7	3.43	2.4	3.7
1350	1620 X 1100	155	450	2.77	2.4	3.7	3.43	2.4	3.7
1500	1800 X 1200	180	450	3.51	2.4	3.7	4.17	2.4	3.7
1650	1950 X 1320	205	450	4.27	2.4	3.7			
1800	2100 X 1450	230	450	4.27	2.7	4.0			
			125 X 25-mm OR 75 X 25-mm CORRUGATION RIVETED, WELDED OR HELICAL						
900	1010 X 790	130	450	2.01	3.7	4.6+			
1050	1160 X 920	155	450	2.01	3.7	4.6+			
1200	1340 X 1050	180	450	2.01	3.7	4.6+			
1350	1520 X 1170	205	450	2.01	3.7	4.6+			
1500	1670 X 1300	230	450	2.01	3.7	4.6+			
1650	1850 X 1400	305	450	2.01	4.6+	-			
1800	2050 X 1500	355	450	2.01	4.6	-			
1950	2200 X 1620	355	450	2.01	4.3	4.6+			
2100	2400 X 1720	410	450	2.77	4.0	4.6+			
2250	2600 X 1820	410	600	2.77	3.7	4.6+			
2400	2840 X 1920	460	600	2.77	3.4	4.6+			

NOTES:
1. THE AVERAGE INSIDE DIAMETER SHALL NOT VARY MORE THAN ONE (1) PERCENT OR 13 mm, WHICHEVER IS GREATER, FROM THE NOMINAL DIAMETER WHEN MEASURED ON THE INSIDE CREST OF THE CORRUGATIONS. (AASHTO M 36M/M 36 & AASHTO M 196M/M 196).

† 2. BEARING PRESSURES EXCEEDING 192 kPa REQUIRED FOR GIVEN FILL HEIGHT SHALL HAVE FOUNDATION MATERIALS INVESTIGATED TO DETERMINE BEARING CAPACITY.

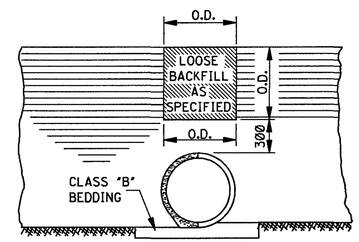

SECTION A–A

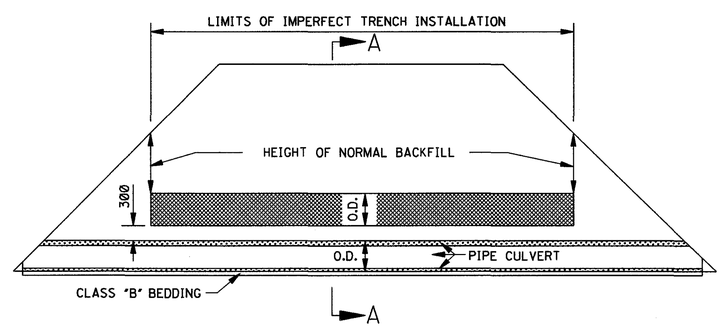

ELEVATION

IMPERFECT TRENCH INSTALLATION

GENERAL NOTES:

1. MINIMUM SPACING BETWEEN MULTIPLE LINES OF PARALLEL PIPE SHALL BE THE DISTANCE REQUIRED FOR INSTALLING THE ADJACENT FLARED END SECTIONS OR AS SHOWN ON THE HEADWALL DRAWINGS FOR CONDUITS REQUIRING HEADWALLS.

2. UNLESS OTHERWISE INDICATED, THE TOP OF THE PIPE SHALL BE BELOW THE TOP OF THE SUBGRADE, AND A MINIMUM OF 300 mm OF COVER OVER THE TOP OF THE PIPE SHALL BE MAINTAINED BETWEEN THE SHOULDER LINES.

3. WHERE PRE-BED PIPE IS INSTALLED, FLARED END SECTIONS FROM OTHER MANUFACTURERS MAY BE JOINED TO PRE-BED PIPE PROVIDED A CONCRETE COLLAR IS PLACED AT THE CONTRACTORS EXPENSE AND A DEFORMATION TO THE PIPE'S FLOWLINE IS NOT EVIDENT ON FINAL PLACEMENT.

ALL DIMENSIONS ARE IN MILLIMETERS (mm) EXCEPT WHERE NOTED.

DATE	REVISION	BY

MISSISSIPPI DEPARTMENT OF TRANSPORTATION
ROADWAY DESIGN DIVISION
STANDARD PLAN

PIPE CULVERT INSTALLATION

METRIC

WORKING NUMBER PI-1

ISSUE DATE: OCTOBER 1, 1998

SHEET NUMBER 300