STATE	PROJECT NO.
MISS.	

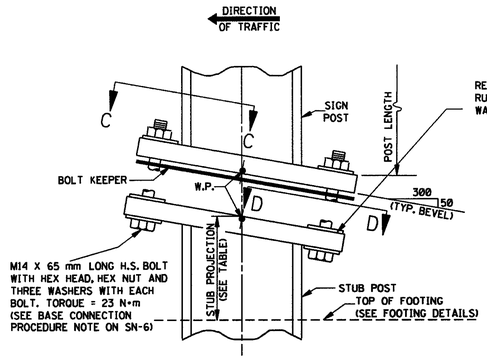

BASE CONNECTION DETAILS FOR S75 X 8.5 AND S100 X 11.5 SHAPED POSTS

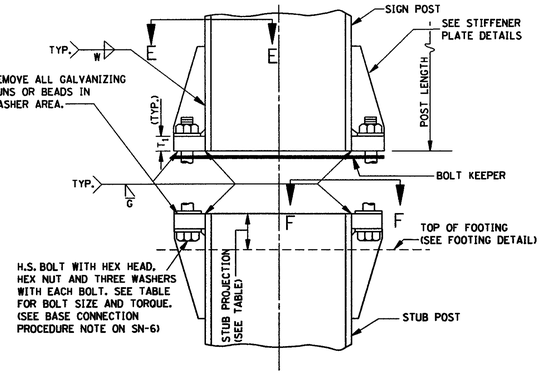

BASE CONNECTION DETAILS FOR W SHAPED POSTS

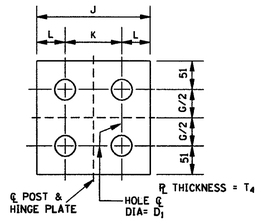

HINGE PLATE

NOTE: INSTALLATION SIMILAR TO DETAIL "A", FUSE PLATE.

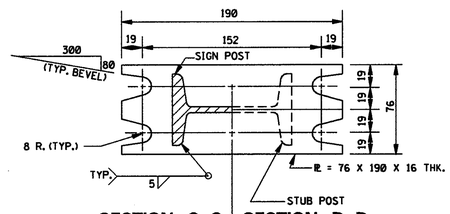

SECTION C–C SECTION D–D

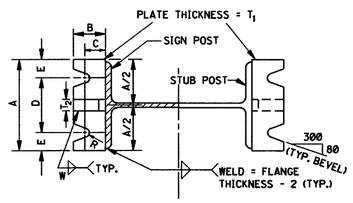

SECTION E–E SECTION F–F

NOTE: SEE TABLE FOR DIMENSIONS

NOTE: WHERE SIGN SUPPORTS MAY BE STRUCK FROM MORE THAN ONE DIRECTION, THE BASE CONNECTIONS SHALL BE LEVEL.

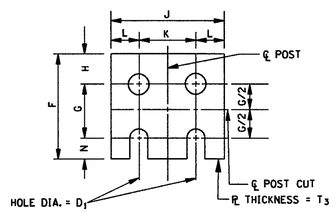

FUSE PLATE DETAIL

NOTE: SEE TABLE FOR DIMENSIONS. USE H.S. BOLTS WITH HEX HEAD, HEX NUTS, ONE FLAT WASHER UNDER EACH BOLT HEAD AND BEVEL OR FLAT WASHERS (WHERE REQUIRED) UNDER NUTS.

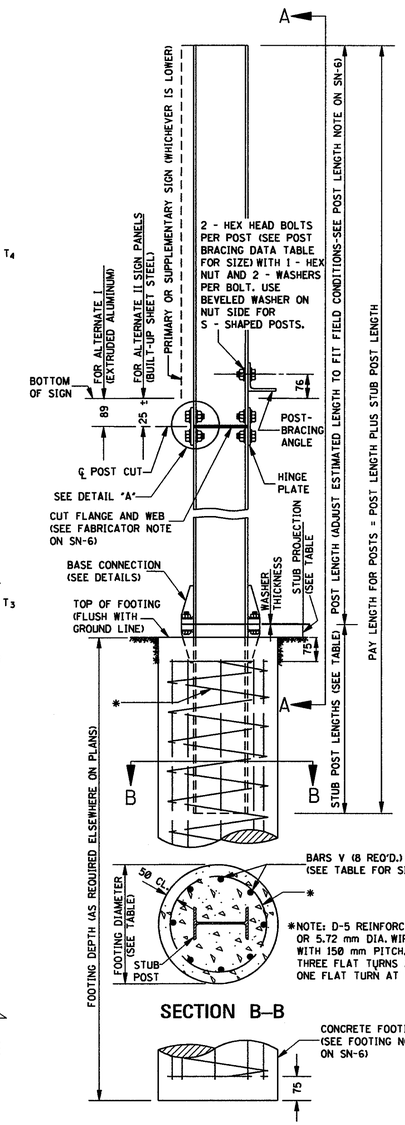

SECTION B–B

END ELEVATION OF POST AND FOOTING

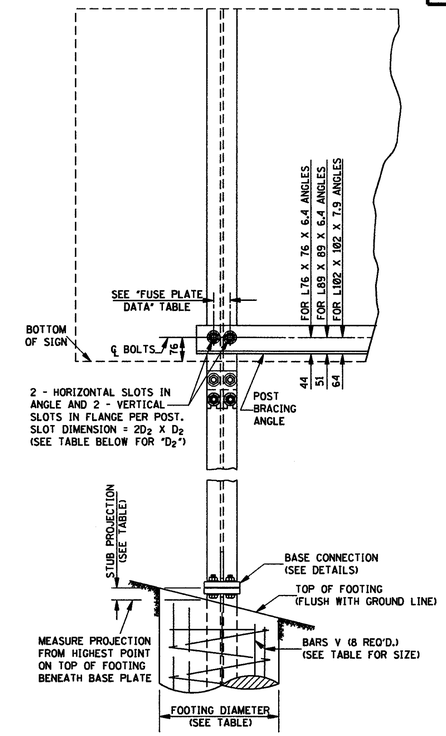

SECTION A–A

GENERAL NOTE:

1. SEE SN-6 FOR GENERAL NOTES.

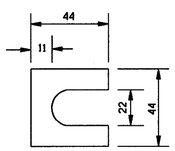

SHIM DETAIL

NOTE: FURNISH 2-0.30 mm ± THICK AND 2-0.81 mm ± THICK SHIMS PER POST. SHIMS SHALL BE FABRICATED FROM BRASS SHIM STOCK OR STRIP CONFORMING TO ASTM B 36M.

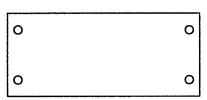

DIAGRAM OF "BOLT KEEPER"

NOTE: FABRICATED FROM 0.47 mm THICK GALVANIZED STEEL. REQUIRED BETWEEN BASE PL AND STUB POST PL. DIMENSIONED AS REQUIRED FOR EACH INSTALLATION.

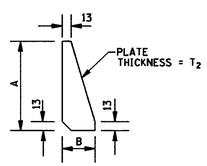

STIFFENER PLATE DETAIL

NOTE: SEE TABLE FOR DIMENSIONS

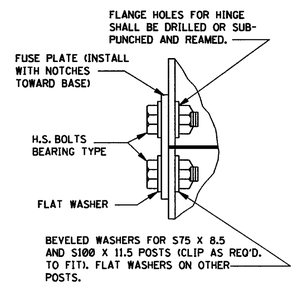

DETAIL "A", FUSE PLATE

NOTE: SEE FABRICATOR NOTE ON SN-6.

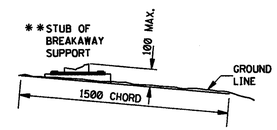

BREAKAWAY SUPPORT STUD CLEARANCE DIAGRAM

** NOTE: STUB PROJECTION SHOULD BE MEASURED OVER A 1500 mm CHORD AS PER AASHTO SPECIFICATIONS LATEST EDITION.

POST BRACING DATA

DESCRIPTION \ POST SIZE		W310 X 38.7 W250 X 38.5 W250 X 32.7	W200 X 31.3 W200 X 26.6 W150 X 22.5	W150 X 18.0 W150 X 13.5 "S" SHAPES
BOLT SIZE		M22 X 60	M20 X 50	M14 X 45
D_2		24	22	16
ANGLE LENGTH		Z + 230	Z + 200	Z + 150
ANGLE SIZE FOR POST SPACING OF	0-2700	L102 X 102 X 7.9	L89 X 89 X 6.4	L76 X 76 X 6.4
	2700-3300	L102 X 102 X 7.9	L89 X 89 X 6.4	L89 X 89 X 6.4
	3300-5400	L102 X 102 X 7.9	L102 X 102 X 7.9	L102 X 102 X 7.9

NOTE: Z = DISTANCE BETWEEN ℄'S OF EXTERIOR POSTS.

BASE CONNECTION DATA

DIMENSION / POST SIZE	BOLT SIZE & TORQUE	A	B	C	D	E	T_1	T_2	W	R
S75 X 8.5	SEE DETAIL									
S100 X 11.5	SEE DETAIL									
W150 X 13.5	M16 X 70 LONG TORQUE 34 N•m	128	51	32	70	29	20	12	6	10
W150 X 18.0										
W150 X 22.5										
W200 X 26.6										
W200 X 31.3	M20 X 90 LONG TORQUE 56 N•m	153	57	35	89	32	25	20	8	11
W250 X 32.7										
W250 X 38.5										
W310 X 38.7										

FUSE PLATE DATA

F	G	H	J	K	L	N	D_1	T_3	BOLT SIZE (DIA. X LENGTH)	MIN. BOLT TENSION (kN)	T_4
80	38	29	66	38	14	13	16	6	M14 X 45	53.6	6
80	38	29	66	38	14	13	16	6	M14 X 45	53.6	6
93	51	29	101	57	22	13	16	6	M14 X 40	53.6	6
96	51	29	101	57	22	16	18	10	M16 X 50	85.4	10
115	64	32	153	89	32	19	22	12	M20 X 55	126.3	10
115	64	32	134	70	32	19	22	12	M20 X 55	126.3	10
118	64	32	134	70	32	22	24	14	M22 X 65	174.6	10
130	76	32	146	70	38	22	24	14	M22 X 65	174.6	10
130	76	32	146	70	38	22	24	14	M22 X 65	174.6	11
130	76	32	165	89	38	22	24	14	M22 X 65	174.6	10

FOOTING DATA

STUB LENGTH	STUB ** PROJECTION	FOOTING DIAMETER	BARS V SIZE	DIMENSION / POST SIZE
450	90	450	#13	S75 X 8.5
450	90	450	#13	S100 X 11.5
600	75	600	#13	W150 X 13.5
600	75	600	#16	W150 X 18.0
750	75	600	#19	W150 X 22.5
750	75	600	#22	W200 X 26.6
900	65	600	#25	W200 X 31.3
900	65	600	#29	W250 X 32.7
900	65	600	#32	W250 X 38.5
900	65	600	#36	W310 X 38.7

ALL DIMENSIONS ARE IN MILLIMETERS (mm) EXCEPT WHERE NOTED.

REVISION	BY

MISSISSIPPI DEPARTMENT OF TRANSPORTATION
ROADWAY DESIGN DIVISION
STANDARD PLAN

BREAKAWAY SIGN SUPPORTS

DEPARTMENT OF TRANSPORTATION METRIC MISSISSIPPI

WORKING NUMBER SN-6A

DATE ISSUE DATE: OCTOBER 1, 1998

SHEET NUMBER 230