STATE	PROJECT NO.
MISS.	

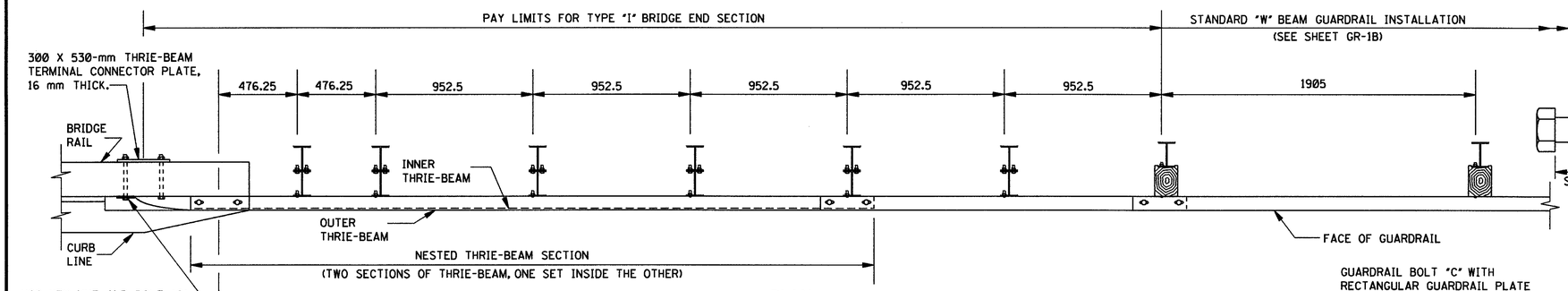

PLAN

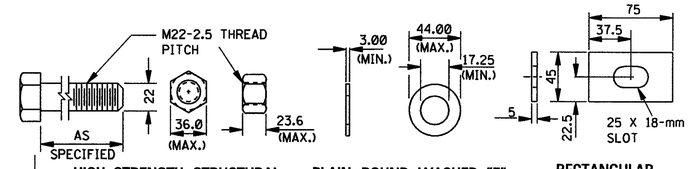

HIGH-STRENGTH STRUCTURAL HEX NUT AND BOLT "C"

PLAIN ROUND WASHER "F"

RECTANGULAR GUARDRAIL PLATE WASHER

FASTENER DETAILS

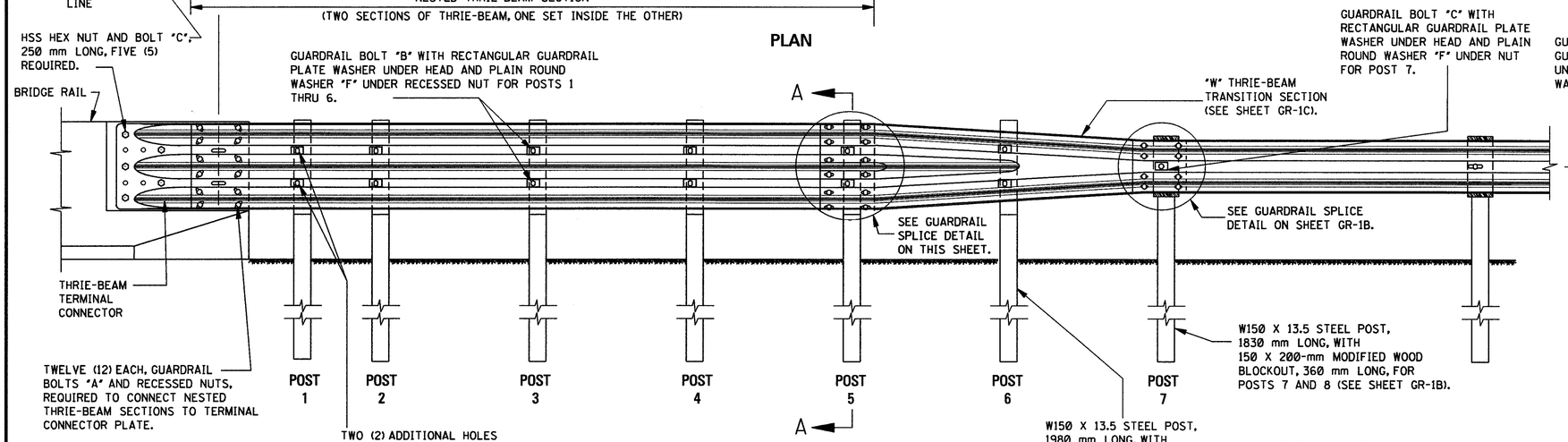

ELEVATION FROM ℄ ROADWAY

NOTE: BACKUP PLATES ARE NOT USED IN THIS TRANSITION.

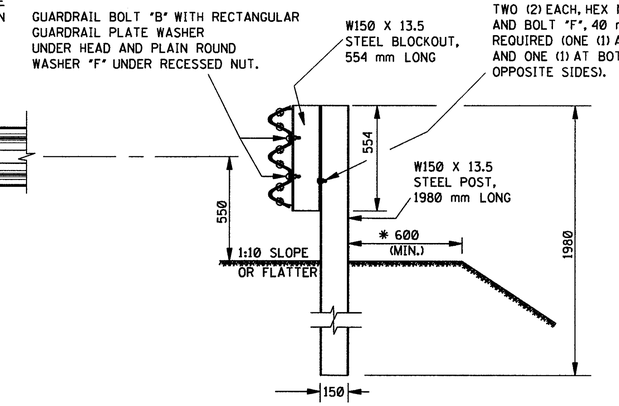

SECTION A–A

*NOTE: UNLESS SPECIFIED OTHERWISE ON THE PLANS.

GENERAL NOTES:

1. THIS GUARDRAIL TRANSITION IS APPROPRIATE FOR CONNECTION TO A MODIFIED RECEIVER CAST INTO A SAFETY SHAPE AND SHOULD NOT BE CONNECTED DIRECTLY TO A CONCRETE SAFETY SHAPE.
2. SEE RAILING DETAILS IN BRIDGE DRAWINGS FOR OTHER DETAILS.

GENERAL NOTES (CONTINUED):

3. GUARDRAIL SHALL MEET THE REQUIREMENTS OF AASHTO M 180, CLASS A, TYPE 1 UNLESS OTHERWISE DESIGNATED.
4. THE TYPE "I" TRANSITION IS USED ON BOTH LEFT AND RIGHT SIDES OF EACH BRIDGE APPROACH WITH 2-WAY TRAFFIC AND THE GUARDRAIL SECTIONS SHALL BE LAPPED IN THE DIRECTION OF THE APPROACHING TRAFFIC.
5. POSTS AND BLOCKOUTS SHALL CONFORM TO AASHTO M 270/M 270M (ASTM A 709/A 709M) GRADE 250 STEEL UNLESS CORROSION RESISTANT STEEL IS REQUIRED IN WHICH CASE GRADE 50W STEEL SHALL BE USED. THE STRUCTURAL W150 X 13.5 DIMENSIONS ARE DEFINED IN AASHTO M 160/A 160M (ASTM A 6/A 6M). THE SECTION SHOULD BE ZINC-COATED PER AASHTO M 111 (ASTM A 123) AFTER CUTTING, DRILLING AND PUNCHING. CORROSION RESISTANT STEEL SHOULD NOT BE ZINC-COATED PAINTED OR OTHERWISE TREATED. GUARDRAIL IS EXEMPT FROM THE FRACTURE-CRITICAL TOUGHNESS IN AASHTO M 270/M 270M.
6. FOR FASTENER DETAILS NOT FOUND ON THIS SHEET, SEE SHEET GR-1B.
7. DETAILS PERTINENT TO THE STANDARD INSTALLATION OF "W" AND THRIE-BEAM SECTIONS NOT SPECIFICALLY MODIFIED ON THIS SHEET WILL BE FOUND ON SHEETS GR-1B AND GR-1C, RESPECTIVELY.
8. FOR OTHER DETAILS OF POSTS, POST ACCESSORIES, FASTENERS & RAIL ELEMENTS, SEE AASHTO-AGC-ARTBA JOINT TASK FORCE NO. 13, TITLED "A GUIDE TO STANDARDIZED HIGHWAY BARRIER HARDWARE," LATEST EDITION.

ALL DIMENSIONS ARE IN MILLIMETERS (mm) EXCEPT WHERE NOTED.

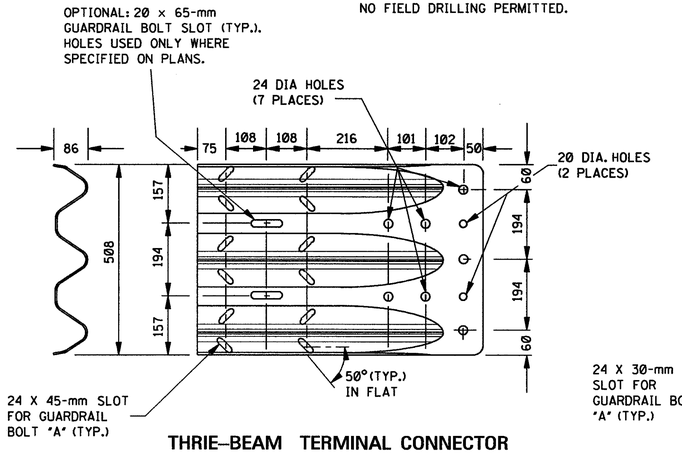

THRIE–BEAM TERMINAL CONNECTOR

NOTES:

1. THE THRIE-BEAM TERMINAL CONNECTOR IS TO BE AASHTO M 180 CORRUGATED SHEET STEEL, CLASS B, TYPE I.
2. ALTERNATIVELY, THE SPLICE SLOTS CAN BE ORIENTED PARALLEL TO THE LONGITUDINAL AXIS OF THE TERMINAL CONNECTOR. HOWEVER, THE 50° SLOT VERSION IS EASIER TO INSTALL WHERE SEVERAL GUARDRAIL SECTIONS ARE NESTED TOGETHER.

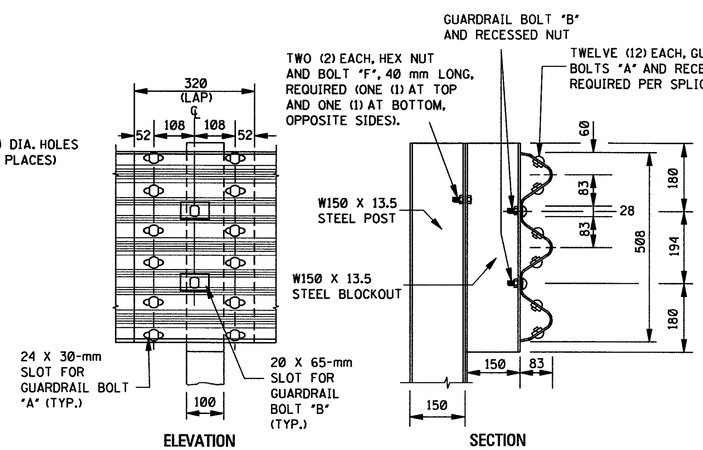

GUARDRAIL SPLICE DETAIL
(POST 5)

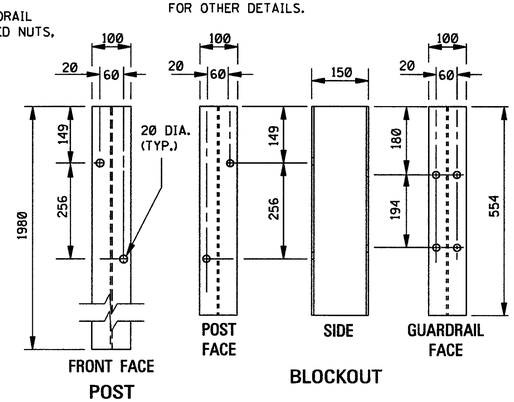

DETAILS OF THRIE–BEAM POST AND BLOCKOUT
(POST 1 THRU POST 6)

NOTES:

1. HOLE DETAILS ARE REQUIRED FOR POSTS AND BLOCKOUTS 1 THRU 6.
2. STEEL POSTS AND BLOCKOUTS ARE FABRICATED FROM W150 X 13.5 STRUCTURAL STEEL SHAPES.
3. ALL HOLES IN BOTH POSTS AND BLOCKOUTS ARE 20 mm IN DIAMETER.

DATE	REVISION	BY

MISSISSIPPI DEPARTMENT OF TRANSPORTATION
ROADWAY DESIGN DIVISION
STANDARD PLAN

GUARDRAIL: BRIDGE END SECTION TYPE "I"
(STEEL POSTS)

WORKING NUMBER GR-2G

ISSUE DATE: OCTOBER 1, 1998

SHEET NUMBER 191