STATE	PROJECT NO.
MISS.	

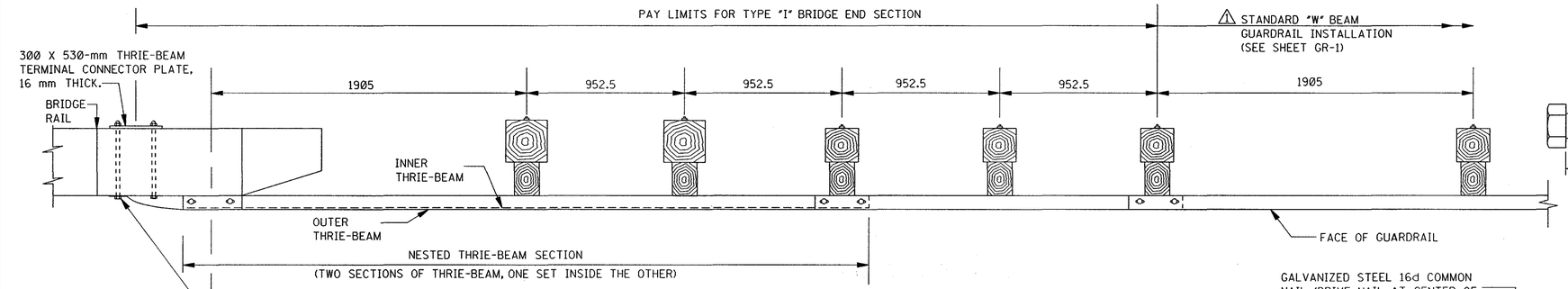

PLAN

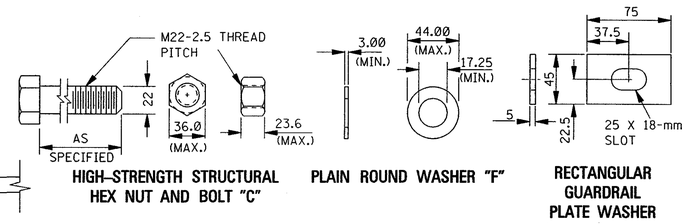

HIGH-STRENGTH STRUCTURAL HEX NUT AND BOLT "C"

PLAIN ROUND WASHER "F"

RECTANGULAR GUARDRAIL PLATE WASHER

FASTENER DETAILS

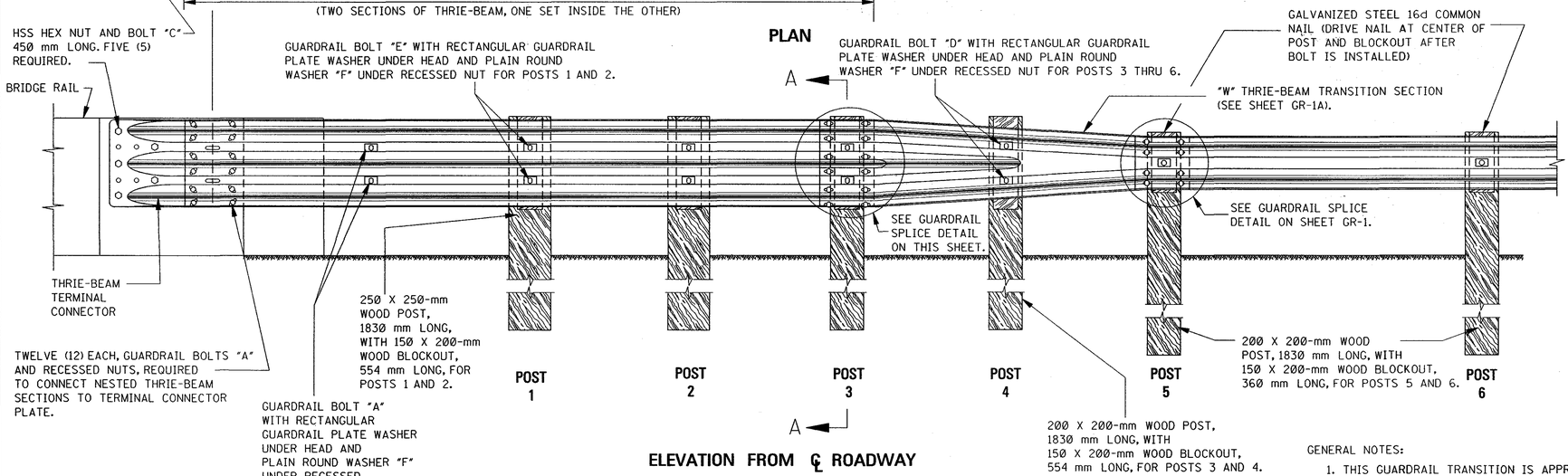

ELEVATION FROM ℄ ROADWAY

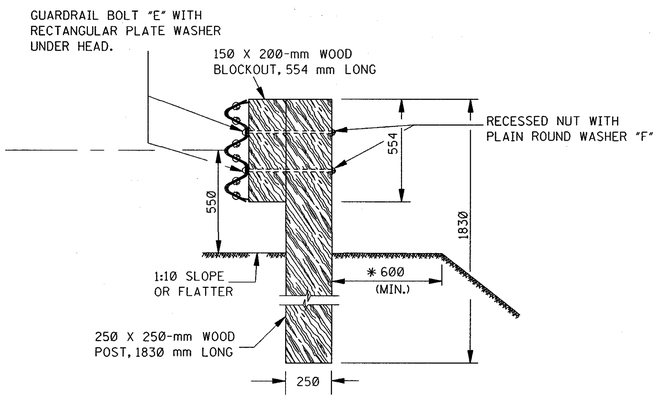

SECTION A–A

*NOTE: UNLESS SPECIFIED OTHERWISE ON THE PLANS.

GENERAL NOTES:

1. THIS GUARDRAIL TRANSITION IS APPROPRIATE FOR A CONNECTION TO A VERTICAL CONCRETE SHAPE AND SHOULD NOT BE CONNECTED DIRECTLY TO A CONCRETE SAFETY SHAPE. CONCRETE SAFETY SHAPE BARRIERS SHOULD BE TRANSITIONED TO A VERTICAL SHAPE AT THE GUARDRAIL CONNECTION. BRIDGE RAIL ENDS AND BRIDGE PARAPETS MUST BE OF ADEQUATE STRENGTH TO ACCEPT FULL IMPACT LOADING.

GENERAL NOTES (CONTINUED):

2. SEE RAILING DETAILS IN BRIDGE DRAWINGS FOR OTHER DETAILS.
3. GUARDRAIL SHALL MEET THE REQUIREMENTS OF AASHTO M 180, CLASS A, TYPE 1 UNLESS OTHERWISE DESIGNATED.
4. THE TYPE "I" TRANSITION IS USED ON BOTH LEFT AND RIGHT SIDES OF EACH BRIDGE APPROACH WITH 2-WAY TRAFFIC AND THE GUARDRAIL SECTIONS SHALL BE LAPPED IN THE DIRECTION OF THE APPROACHING TRAFFIC.
5. ALL WOOD POSTS AND BLOCKOUTS SHALL BE TREATED TIMBER IN ACCORDANCE WITH MISSISSIPPI DEPARTMENT OF TRANSPORTATION STANDARD SPECIFICATIONS.
6. FOR FASTENER DETAILS NOT FOUND ON THIS SHEET, SEE SHEET GR-1.
7. DETAILS PERTINENT TO THE STANDARD INSTALLATION OF "W" AND THRIE-BEAM SECTIONS NOT SPECIFICALLY MODIFIED ON THIS SHEET WILL BE FOUND ON SHEETS GR-1 AND GR-1A, RESPECTIVELY.
8. FOR OTHER DETAILS OF POSTS, POST ACCESSORIES, FASTENERS & RAIL ELEMENTS, SEE AASHTO-AGC-ARTBA JOINT TASK FORCE NO. 13, TITLED "A GUIDE TO STANDARDIZED HIGHWAY BARRIER HARDWARE," LATEST EDITION.

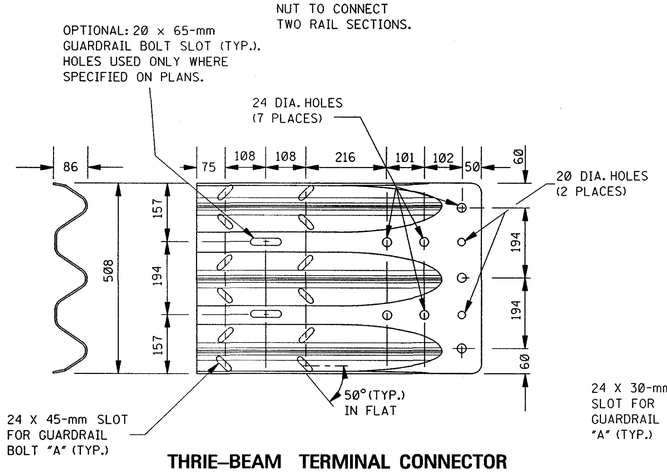

THRIE–BEAM TERMINAL CONNECTOR

NOTES:

1. THE THRIE-BEAM TERMINAL CONNECTOR IS TO BE AASHTO M 180 CORRUGATED SHEET STEEL, CLASS B, TYPE I.
2. ALTERNATIVELY, THE SPLICE SLOTS CAN BE ORIENTED PARALLEL TO THE LONGITUDINAL AXIS OF THE TERMINAL CONNECTOR. HOWEVER, THE 50° SLOT VERSION IS EASIER TO INSTALL WHERE SEVERAL GUARDRAIL SECTIONS ARE NESTED TOGETHER.

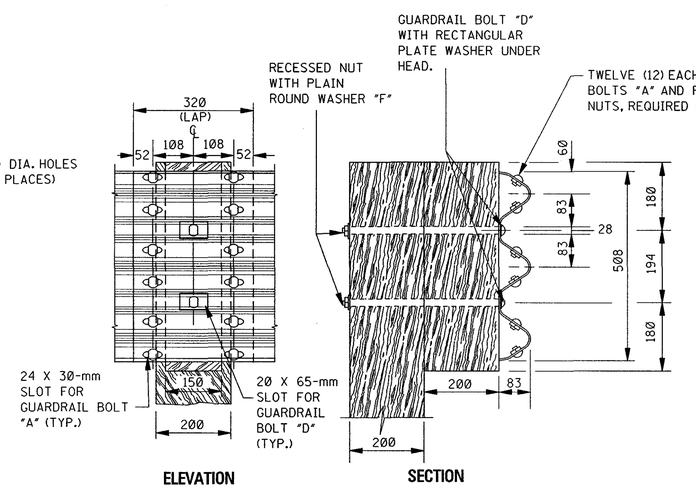

GUARDRAIL SPLICE DETAIL
(POST 3)

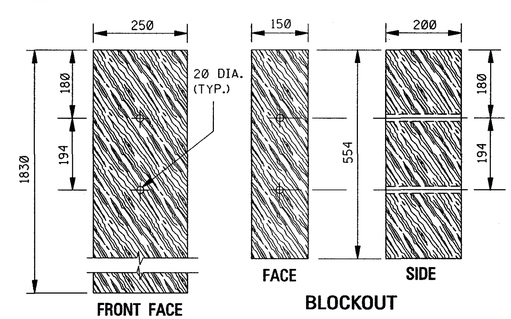

POST

BLOCKOUT

DETAILS OF THRIE–BEAM POST AND BLOCKOUT
(POST 1 AND POST 2)

NOTES:

1. HOLE DETAILS ARE REQUIRED ON ALL WOOD POSTS AND BLOCKOUTS.
2. WOOD POSTS AND BLOCKOUTS ARE FABRICATED FROM TREATED TIMBER UNLESS SPECIFIED OTHERWISE ON THE PLANS.
3. ALL HOLES IN BOTH POSTS AND BLOCKOUTS ARE 20 mm IN DIAMETER.

△ ALL DIMENSIONS ARE IN MILLIMETERS (mm) EXCEPT WHERE NOTED.

DATE	BY	REVISION
12-1-99	S.W.R.	STANDARD "W" BEAM

MISSISSIPPI DEPARTMENT OF TRANSPORTATION
ROADWAY DESIGN DIVISION
STANDARD PLAN

GUARDRAIL: BRIDGE END SECTION TYPE "I"
(WOOD POSTS)

DEPARTMENT OF TRANSPORTATION METRIC MISSISSIPPI

WORKING NUMBER GR-2F

ISSUE DATE: OCTOBER 1, 1998

SHEET NUMBER 190