STATE	PROJECT NO.
MISS.	

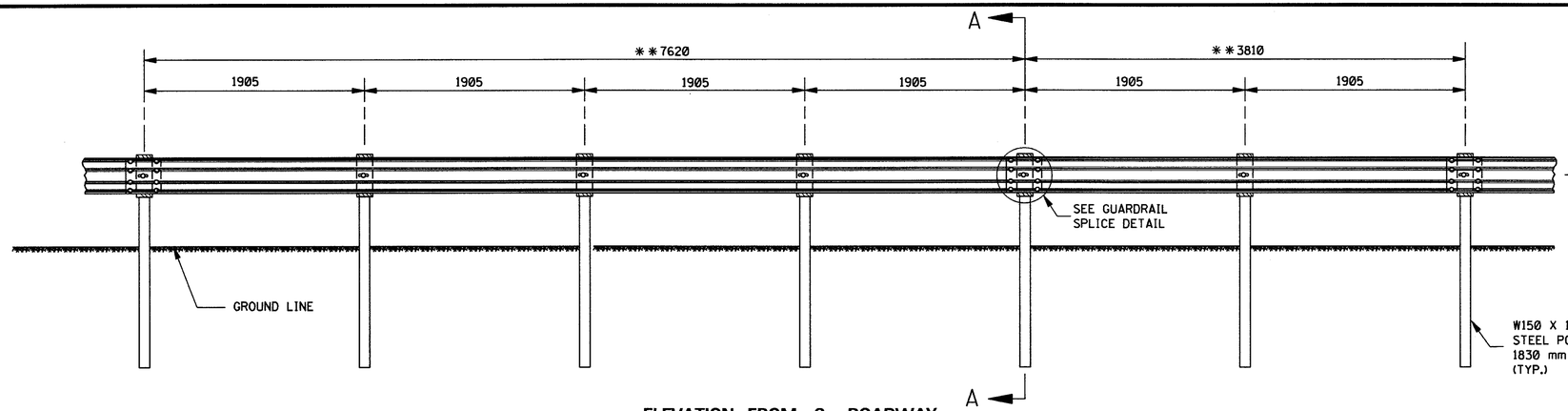

ELEVATION FROM ℄ ROADWAY

** NOTE: OPTIONAL BEAM LENGTHS.

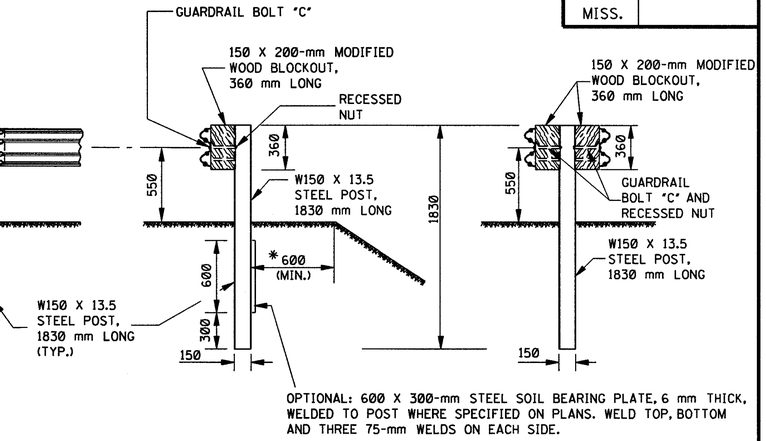

SINGLE-FACED BARRIER DOUBLE-FACED BARRIER

SECTION A–A

*NOTE: UNLESS SPECIFIED OTHERWISE ON THE PLANS.

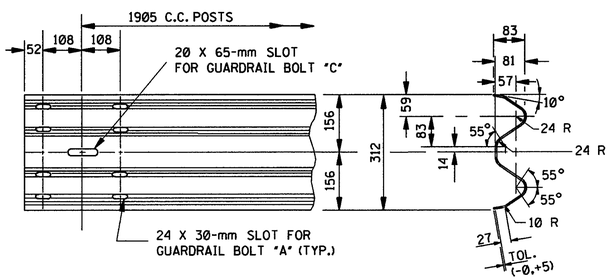

TYPICAL GUARDRAIL SECTION

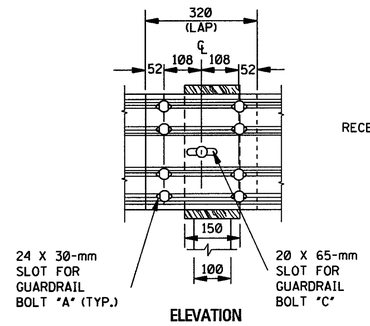

ELEVATION

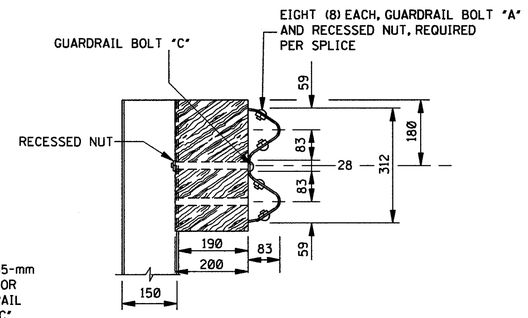

SECTION

GUARDRAIL SPLICE DETAIL

GENERAL NOTES:

1. GUARDRAIL SHALL MEET THE REQUIREMENTS OF AASHTO M 180, CLASS A, TYPE 1 UNLESS OTHERWISE DESIGNATED.
2. GUARDRAIL SHALL BE SINGLE FACED UNLESS OTHERWISE DESIGNATED.
3. GUARDRAIL SECTIONS SHALL BE LAPPED IN THE DIRECTION OF TRAFFIC FLOW FOR THE LANE NEAREST THE GUARDRAIL. THE ONLY EXCEPTION NOTED IS THAT GUARDRAIL IS TO BE LAPPED FOR APPROACHING TRAFFIC ON A BRIDGE WITH 2-WAY TRAFFIC.
4. STEEL POSTS SHALL CONFORM TO AASHTO M 183/M 183M OR ASTM A 769/A 769M (EXCEPT ULTRASONIC TESTING). THEY SHALL BE GALVANIZED IN ACCORDANCE WITH AASHTO M 111 EXCEPT WHEN CORROSION RESISTANT STEEL IS REQUIRED IN WHICH CASE POSTS SHALL CONFORM TO AASHTO M 222/M 222M AND SHALL NOT BE PAINTED OR GALVANIZED. NO PUNCHING, DRILLING OR CUTTING WILL BE PERMITTED AFTER GALVANIZING EXCEPT FOR HOLES TO MOUNT GUARDRAIL DELINEATORS.
5. ALL MODIFIED WOOD BLOCKOUTS SHALL BE TREATED TIMBER IN ACCORDANCE WITH MISSISSIPPI DEPARTMENT OF TRANSPORTATION STANDARD SPECIFICATIONS.
6. FOR OTHER DETAILS OF POSTS, POST ACCESSORIES, FASTENERS & RAIL ELEMENTS, SEE AASHTO-AGC-ARTBA JOINT TASK FORCE NO. 13, TITLED "A GUIDE TO STANDARDIZED HIGHWAY BARRIER HARDWARE," LATEST EDITION.

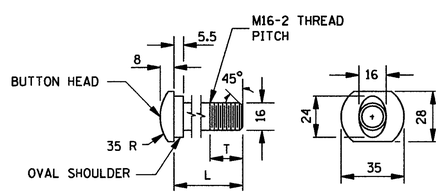

GUARDRAIL BOLT

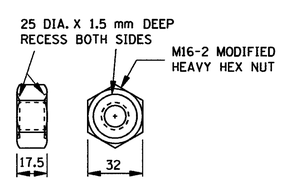

RECESSED NUT

GUARDRAIL BOLTS		
BOLT	L	T (MIN.)
"A"	35	30
"B"	50	45
"C"	255	100

NOTES:

1. ALL GUARDRAIL BOLTS ARE M16-2 THREAD PITCH.
2. IF ANY BOLT EXTENDS MORE THAN 6 mm FROM THE NUT, THE BOLT SHOULD BE TRIMMED BACK.

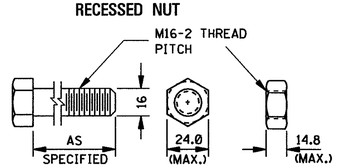

HEX NUT AND BOLT "F"

FASTENER DETAILS

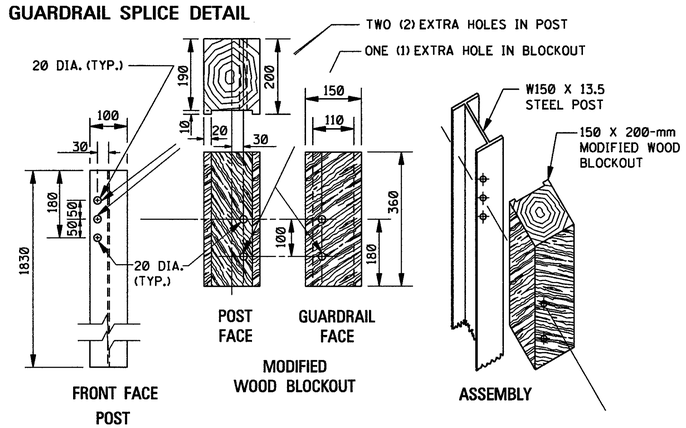

DETAILS OF ADJUSTABLE HEIGHT BLOCKOUT ASSEMBLY

NOTES:

1. ON INITIAL INSTALLATION, THE MODIFIED WOOD BLOCKOUT SHALL BE FASTENED TO THE BOTTOM HOLE IN THE STEEL POST. OTHER HOLES IN THE STEEL POST AND THE MODIFIED WOOD BLOCKOUT ARE FOR FUTURE 50-mm HEIGHT ADJUSTMENTS WHEN THE ROADWAY IS RESURFACED.
2. AN ADDITIONAL GUARDRAIL BOLT "C" AND RECESSED NUT IS REQUIRED FOR THE SECOND HEIGHT ADJUSTMENT.
3. HOLE DETAILS ARE REQUIRED ON ALL STEEL POSTS AND MODIFIED WOOD BLOCKOUTS.
4. STEEL POSTS ARE FABRICATED FROM W150 X 13.5 STRUCTURAL STEEL SHAPES.
5. MODIFIED WOOD BLOCKOUTS ARE FABRICATED FROM 150 X 200-mm TREATED TIMBER UNLESS SPECIFIED OTHERWISE ON THE PLANS.
6. ALL HOLES IN BOTH STEEL POSTS AND MODIFIED WOOD BLOCKOUTS ARE 20 mm IN DIAMETER.

ALL DIMENSIONS ARE IN MILLIMETERS (mm) EXCEPT WHERE NOTED.

MISSISSIPPI DEPARTMENT OF TRANSPORTATION
ROADWAY DESIGN DIVISION
STANDARD PLAN

GUARDRAIL: "W" BEAM (STEEL POSTS)

METRIC

WORKING NUMBER GR-1B

SHEET NUMBER 182

BY | REVISION | DATE

ISSUE DATE: OCTOBER 1, 1998