STATE	PROJECT NO.
MISS.	

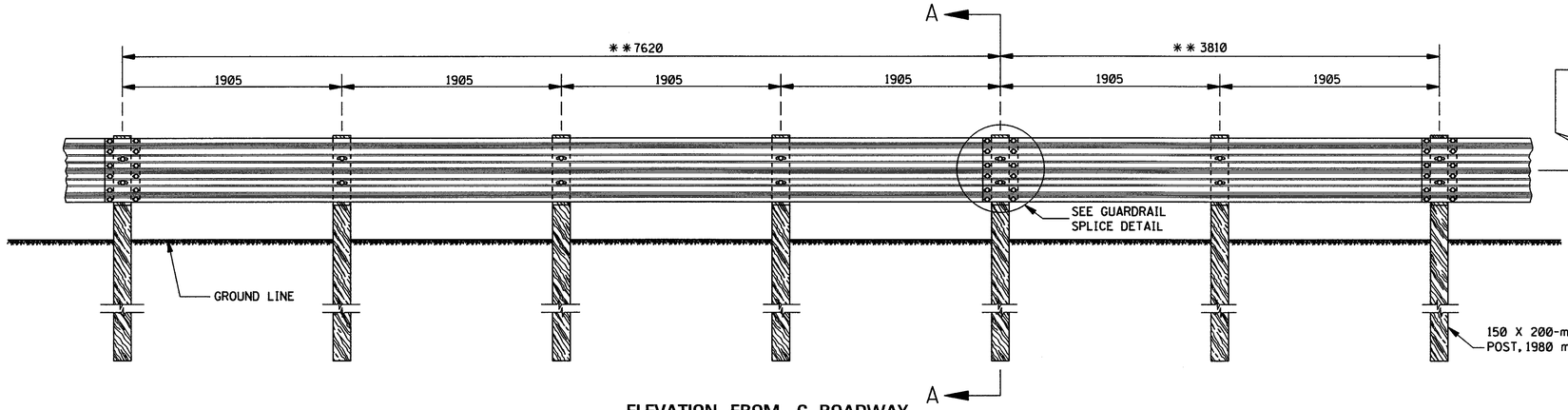

ELEVATION FROM ℄ ROADWAY

**NOTE: OPTIONAL BEAM LENGTHS.

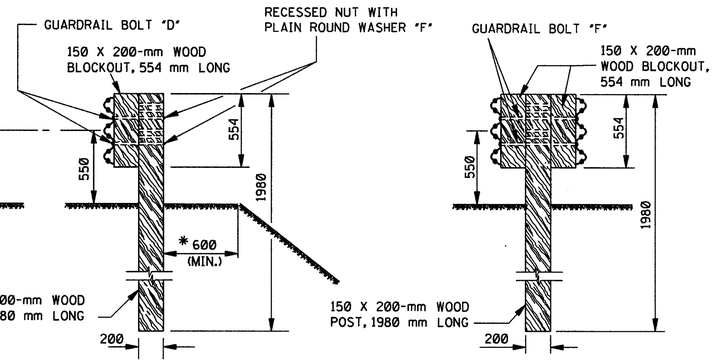

SINGLE-FACED BARRIER

DOUBLE-FACED BARRIER

SECTION A–A

*NOTE: UNLESS SPECIFIED OTHERWISE ON THE PLANS.

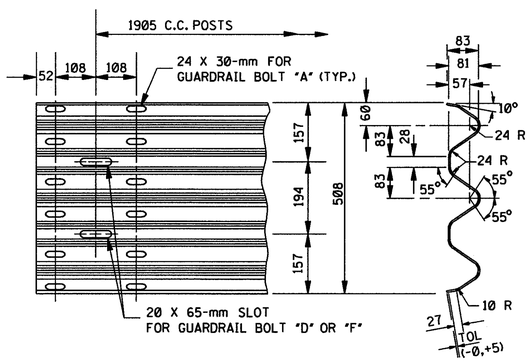

TYPICAL GUARDRAIL SECTION

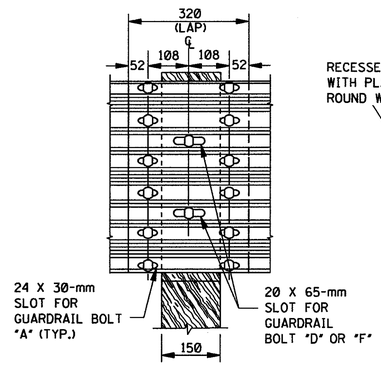

ELEVATION

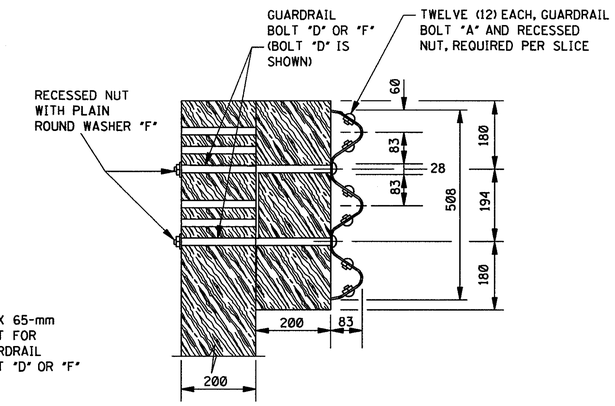

SECTION

GUARDRAIL SPLICE DETAIL

GENERAL NOTES:

1. GUARDRAIL SHALL MEET THE REQUIREMENTS OF AASHTO M 180, CLASS A, TYPE 1 UNLESS OTHERWISE DESIGNATED.
2. GUARDRAIL SHALL BE SINGLE FACED UNLESS OTHERWISE DESIGNATED.
3. GUARDRAIL SECTIONS SHALL BE LAPPED IN THE DIRECTION OF TRAFFIC FLOW FOR THE LANE NEAREST THE GUARDRAIL. THE ONLY EXCEPTION NOTED IS THAT GUARDRAIL IS TO BE LAPPED FOR APPROACHING TRAFFIC ON A BRIDGE WITH 2-WAY TRAFFIC.
4. ALL WOOD POSTS AND BLOCKOUTS SHALL BE TREATED TIMBER IN ACCORDANCE WITH MISSISSIPPI DEPARTMENT OF TRANSPORTATION STANDARD SPECIFICATIONS.
5. FOR FASTENER DETAILS NOT FOUND ON THIS SHEET, SEE SHEET GR-1.
6. FOR OTHER DETAILS OF POSTS, POST ACCESSORIES, FASTENERS & RAIL ELEMENTS, SEE AASHTO-AGC-ARTBA JOINT TASK FORCE NO. 13, TITLED "A GUIDE TO STANDARDIZED HIGHWAY BARRIER HARDWARE," LATEST EDITION.

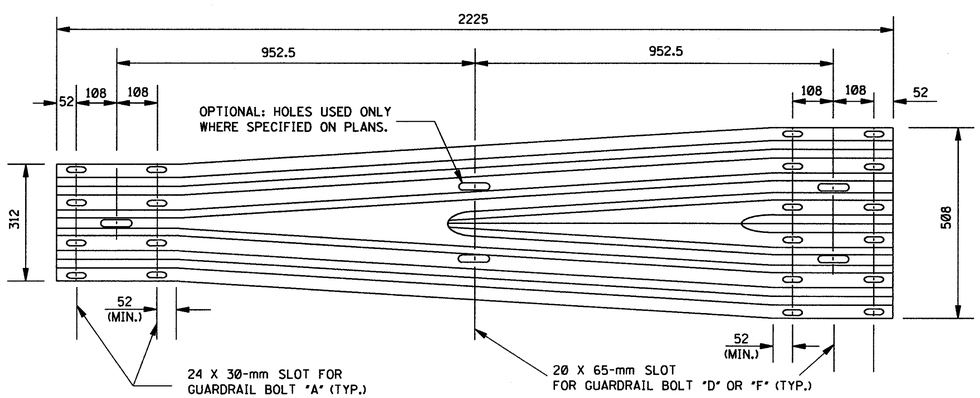

"W" THRIE–BEAM TRANSITION SECTION

NOTE: THE CROSS-SECTIONAL DIMENSIONS FOR THE "W" AND THRIE BEAM ENDS OF THE TRANSITION SECTION ARE THE SAME AS THEIR RESPECTIVE TYPICAL GUARDRAIL SECTIONS.

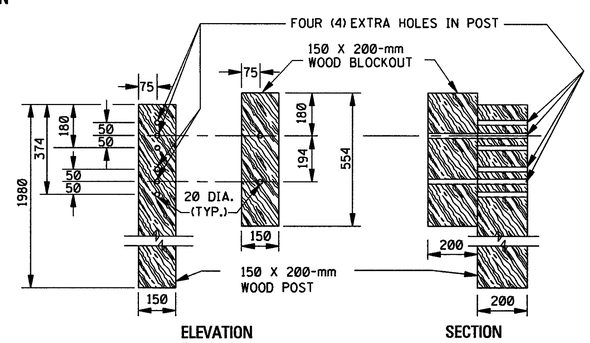

ELEVATION

SECTION

DETAILS OF ADJUSTABLE HEIGHT BLOCKOUT ASSEMBLY

NOTES:

1. ON INITIAL INSTALLATION, THE TOP OF THE BLOCKOUT SHALL BE FLUSH WITH THE TOP OF THE POST. THE ADDITIONAL HOLES IN THE POST AND BLOCKOUT ARE FOR FUTURE 50-mm HEIGHT ADJUSTMENTS WHEN THE ROADWAY IS RESURFACED.
2. HOLE DETAILS ARE REQUIRED ON ALL WOOD POSTS AND BLOCKOUTS.
3. WOOD POSTS AND BLOCKOUTS ARE FABRICATED FROM 150 X 200-mm TREATED TIMBER UNLESS SPECIFIED OTHERWISE ON THE PLANS.
4. ALL HOLES IN BOTH POSTS AND BLOCKOUTS ARE 20 mm IN DIAMETER.

ALL DIMENSIONS ARE IN MILLIMETERS (mm) EXCEPT WHERE NOTED.

DATE	REVISION	BY

MISSISSIPPI DEPARTMENT OF TRANSPORTATION
ROADWAY DESIGN DIVISION
STANDARD PLAN

GUARDRAIL: THRIE BEAM (WOOD POSTS)

METRIC

WORKING NUMBER GR-1A

ISSUE DATE: OCTOBER 1, 1998

SHEET NUMBER 181