STATE	PROJECT NO.
MISS.	

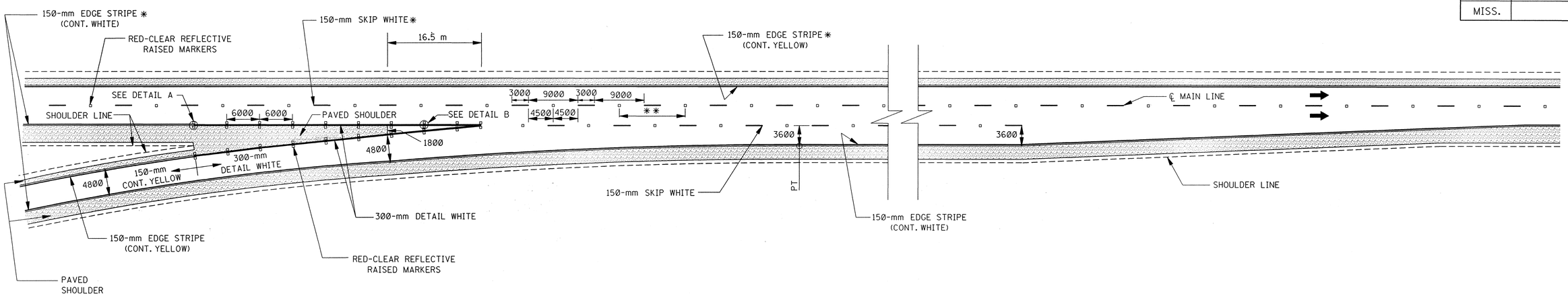

PARALLEL ENTRANCE RAMP

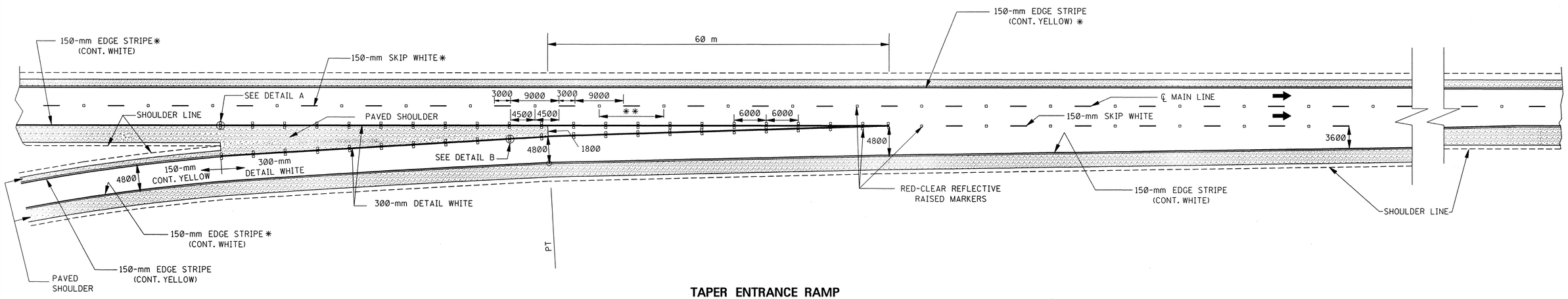

TAPER ENTRANCE RAMP

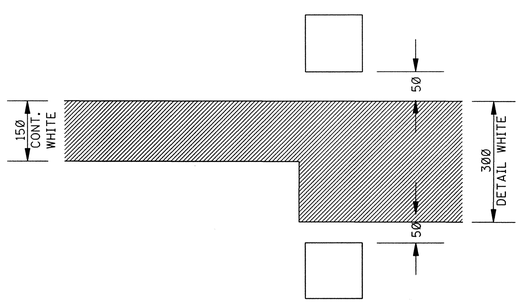

DETAIL A

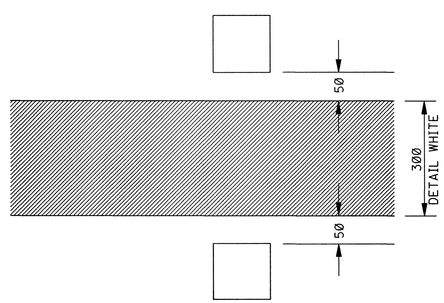

DETAIL B

GENERAL NOTES:

✱1. SEE SHEET PM-1 FOR THE PLACEMENT OF LANE-LINE STRIPE WITH RESPECT TO THE PAVEMENT JOINT AND FOR THE PLACEMENT OF THE EDGE LINE WITH RESPECT TO THE OUTSIDE EDGE OF THE TRAVELED WAY.

✱✱2. ON THE MAIN FACILITY, PLACE REFLECTIVE RED-CLEAR RAISED PAVEMENT MARKERS AT A 12-m SPACING ON ALL LANE-LINE(S) THROUGHOUT THE INTERCHANGE AREA BEGINNING 300 m IN ADVANCE (IN DIRECTION OF TRAFFIC) OF THE EXIT RAMP TAPER AND CONTINUING THROUGH THE INTERCHANGE TO THE END OF THE ENTRANCE RAMP TAPER.

3. ALL PAVEMENT MARKINGS SHALL BE PLASTIC.

4. PAVEMENT MARKERS SHALL BE HIGH PERFORMANCE REFLECTIVE RAISED PAVEMENT MARKERS AS LISTED IN THE MDOT "APPROVED SOURCES OF MATERIALS."

△ ALL DIMENSIONS ARE IN MILLIMETERS (mm) EXCEPT WHERE NOTED.

DATE	REVISION	BY
12-1-99	REVISE STRIPE WIDTH	S.W.R.

MISSISSIPPI DEPARTMENT OF TRANSPORTATION
ROADWAY DESIGN DIVISION
STANDARD PLAN

PAVEMENT MARKING DETAILS FOR INTERCHANGE ENTRANCE RAMPS (PARALLEL AND TAPER)

ISSUE DATE: OCTOBER 1, 1998

METRIC

WORKING NUMBER PM-3

SHEET NUMBER 122