| STATE | PROJECT NO. |
|---|---|
| MISS. | |

### DIMENSIONS AND REINFORCING COMMON TO FLARED HEADWALLS FOR SINGLE, DOUBLE AND TRIPLE LINE PIPE CULVERTS

| PIPE DIA | MIN THK "T" | C | H | R | S1 | S2 | U | W | US NO | US LGTH | UL NO | UL LGTH |
|---|---|---|---|---|---|---|---|---|---|---|---|---|
| 15 | 2¼ | 7 | 2-5 | 5-2 | 6-9⅝ | 7-3⅝ | 6 | 0-8 | 2 | 5-2 | 2 | 6-7 |
| 18 | 2½ | 7 | 2-9½ | 6-0 | 7-11⅞ | 8-5⅞ | 6 | 0-10 | 2 | 6-0 | 2 | 7-9 |
| 24 | 3 | 7 | 3-4½ | 7-8 | 10-4⅛ | 10-10⅛ | 6 | 1-0 | 2 | 7-8 | 2 | 10-2 |
| 30 | 3½ | 7 | 3-11½ | 9-0 | 12-2¾ | 12-8¾ | 6 | 1-3 | 2 | 9-0 | 2 | 12-0 |
| 36 | 4 | 7½ | 4-6½ | 10-6 | 14-4⅛ | 14-10⅛ | 6 | 1-5 | 2 | 10-6 | 2 | 14-2 |
| 42 | 4½ | 7½ | 5-1½ | 11-10 | 16-2⅞ | 16-8⅞ | 6 | 1-8 | 2 | 11-10 | 2 | 16-0 |
| 48 | 5 | 7½ | 5-8½ | 13-4 | 18-4¼ | 18-10¼ | 6 | 1-10½ | 2 | 13-4 | 2 | 18-2 |
| 54 | 5½ | 8 | 6-3½ | 14-8 | 20-2⅞ | 20-8⅞ | 6 | 2-1 | 2 | 14-8 | 2 | 20-0 |
| 60 | 6 | 8 | 6-10½ | 16-4 | 22-7⅛ | 23-1⅛ | 6 | 2-3 | 2 | 16-4 | 2 | 22-3 |
| 66 | 6½ | 8 | 7-7 | 18-4 | 25-4⅝ | 25-11⅛ | 6½ | 2-6½ | 2 | 18-4 | 2 | 25-2 |
| 72 | 7 | 8 | 8-2 | 19-8 | 27-2¾ | 27-9¾ | 7 | 2-9 | 2 | 19-8 | 2 | 27-0 |
| 84 | 8 | 8 | 9-4 | 22-4 | 30-11 | 31-7 | 8 | 3-2 | 2 | 22-4 | 2 | 31-9 |
| 96 | 9 | 8 | 10-5 | 25-0 | 34-8¼ | 35-4¼ | 8 | 3-6 | 2 | 25-0 | 2 | 35-6 |
| 108 | 10 | 8 | 11-7 | 27-8 | 38-4½ | 39-1½ | 9 | 4-0 | 2 | 27-8 | 2 | 39-2 |

REINFORCING STEEL

| PIPE DIA | W1 S NO | W1 L NO | W1 SIZE | W1 X | W1 X1 | W1 LGTH | W2 S NO | W2 L NO | W2 SIZE | W2 X | W2 X1 | W2 LGTH | W3 S NO | W3 L NO | W3 SIZE | W3 X | W3 X1 | W3 LGTH |
|---|---|---|---|---|---|---|---|---|---|---|---|---|---|---|---|---|---|---|
| 15 | 3 | 4 | #4 | 1-1 | 1-8 | 2-9 | 3 | 4 | #4 | 1-0 | 1-0 | 2-0 | | | | | | |
| 18 | 3 | 4 | #4 | 1-3 | 2-0 | 3-3 | 4 | 6 | #4 | 1-0 | 1-0 | 2-0 | | | | | | |
| 24 | 3 | 4 | #4 | 1-8 | 2-7 | 4-3 | 4 | 5 | #4 | 1-4 | 1-7 | 2-11 | 2 | 2 | #4 | 1-0 | 1-2 | 2-2 |
| 30 | 3 | 4 | #4 | 2-1 | 3-2 | 5-3 | 4 | 5 | #4 | 1-7 | 2-2 | 3-9 | 3 | 4 | #4 | 1-1 | 1-3 | 2-4 |
| 36 | 3 | 4 | #5 | 2-5 | 3-9 | 6-2 | 4 | 5 | #4 | 2-0 | 2-9 | 4-9 | 4 | 6 | #4 | 1-2 | 1-9 | 2-11 |
| 42 | 3 | 4 | #5 | 2-11 | 4-4 | 7-3 | 4 | 5 | #4 | 2-3 | 3-4 | 5-7 | 4 | 6 | #4 | 1-7 | 2-4 | 3-11 |
| 48 | 3 | 4 | #5 | 3-1 | 4-10 | 7-11 | 4 | 5 | #5 | 2-8 | 3-10 | 6-6 | 4 | 6 | #4 | 1-10 | 2-10 | 4-8 |
| 54 | 3 | 4 | #5 | 3-6 | 5-4 | 8-10 | 4 | 5 | #5 | 3-0 | 4-4 | 7-4 | 4 | 6 | #4 | 2-3 | 3-4 | 5-7 |
| 60 | 3 | 4 | #5 | 3-10 | 5-11 | 9-9 | 4 | 5 | #5 | 3-3 | 4-11 | 8-2 | 4 | 6 | #5 | 2-6 | 3-11 | 6-5 |
| 66 | 3 | 4 | #6 | 4-3 | 6-8 | 10-11 | 4 | 5 | #5 | 3-8 | 5-8 | 9-4 | 4 | 6 | #5 | 3-2 | 4-8 | 7-10 |
| 72 | 3 | 4 | #6 | 4-9 | 7-5 | 12-2 | 4 | 5 | #6 | 4-2 | 6-5 | 10-7 | 4 | 6 | #5 | 3-6 | 5-5 | 8-11 |
| 84 | 3 | 4 | #6 | 5-5 | 8-7 | 14-0 | 4 | 5 | #6 | 5-2 | 7-7 | 12-9 | 4 | 6 | #6 | 4-6 | 6-7 | 11-1 |
| 96 | 3 | 4 | #7 | 5-7 | 9-6 | 15-1 | 6 | 8 | #7 | 5-7 | 8-6 | 14-1 | 4 | 5 | #6 | 5-0 | 7-6 | 12-6 |
| 108 | 3 | 4 | #7 | 6-5 | 10-9 | 17-2 | 6 | 8 | #7 | 6-5 | 9-9 | 16-2 | 4 | 5 | #7 | 5-10 | 8-9 | 14-7 |

| PIPE DIA | W4 S NO | W4 L NO | W4 SIZE | W4 X | W4 X1 | W4 LGTH | W5 S NO | W5 L NO | W5 SIZE | W5 X | W5 X1 | W5 LGTH | W6 S NO | W6 L NO | W6 SIZE | W6 X | W6 X1 | W6 LGTH |
|---|---|---|---|---|---|---|---|---|---|---|---|---|---|---|---|---|---|---|
| 15 | | | | | | | | | | | | | | | | | | |
| 18 | | | | | | | | | | | | | | | | | | |
| 24 | | | | | | | | | | | | | | | | | | |
| 30 | | | | | | | | | | | | | | | | | | |
| 36 | | | | | | | | | | | | | | | | | | |
| 42 | 2 | 2 | #4 | 1-2 | 1-10 | 3-0 | | | | | | | | | | | | |
| 48 | 3 | 4 | #4 | 1-3 | 2-0 | 3-3 | | | | | | | | | | | | |
| 54 | 4 | 5 | #4 | 1-7 | 2-4 | 3-11 | | 1 | #4 | 1-6 | 2-3 | 3-9 | | | | | | |
| 60 | 4 | 5 | #4 | 1-10 | 2-11 | 4-9 | 2 | 4 | #4 | 1-8 | 2-4 | 4-0 | | | | | | |
| 66 | 4 | 5 | #5 | 2-7 | 3-8 | 6-3 | 4 | 6 | #4 | 1-10 | 2-8 | 4-6 | | | | | | |
| 72 | 4 | 5 | #5 | 2-10 | 4-5 | 7-3 | 4 | 6 | #4 | 2-0 | 3-5 | 5-5 | 2 | 2 | #4 | 1-11 | 3-0 | 4-11 |
| 84 | 4 | 5 | #5 | 3-9 | 5-7 | 9-4 | 4 | 6 | #5 | 3-2 | 4-7 | 7-9 | 4 | 6 | #5 | 2-6 | 3-7 | 6-1 |
| 96 | 3 | 4 | #5 | 4-4 | 6-6 | 10-10 | 3 | 5 | #5 | 3-8 | 5-6 | 9-2 | 3 | 4 | #5 | 3-0 | 4-6 | 7-6 |
| 108 | 3 | 5 | #6 | 5-2 | 7-9 | 12-11 | 4 | 4 | #5 | 4-6 | 6-9 | 11-3 | 3 | 5 | #5 | 3-10 | 5-9 | 9-7 |

| PIPE DIA | W7 S NO | W7 L NO | W7 SIZE | W7 X | W7 X1 | W7 LGTH | W8 S NO | W8 L NO | W8 SIZE | W8 X | W8 X1 | W8 LGTH |
|---|---|---|---|---|---|---|---|---|---|---|---|---|
| 15 | | | | | | | | | | | | |
| 18 | | | | | | | | | | | | |
| 24 | | | | | | | | | | | | |
| 30 | | | | | | | | | | | | |
| 36 | | | | | | | | | | | | |
| 42 | | | | | | | | | | | | |
| 48 | | | | | | | | | | | | |
| 54 | | | | | | | | | | | | |
| 60 | | | | | | | | | | | | |
| 66 | | | | | | | | | | | | |
| 72 | | | | | | | | | | | | |
| 84 | | | | | | | | | | | | |
| 96 | 2 | 4 | #5 | 2-2 | 3-10 | 6-0 | | | | | | |
| 108 | 3 | 4 | #5 | 3-2 | 4-9 | 7-11 | 2 | 3 | #5 | 2-10 | 4-5 | 7-3 |

| PIPE DIA | YS1 NO | YS1 LGTH | YS2 NO | YS2 LGTH | YS3 NO | YS3 LGTH | YS4 NO | YS4 LGTH | YS5 NO | YS5 LGTH | YS6 NO | YS6 LGTH | YS7 NO | YS7 LGTH | YS8 NO | YS8 LGTH |
|---|---|---|---|---|---|---|---|---|---|---|---|---|---|---|---|---|
| 15 | 1 | 3-3 | 1 | 5-10 | | | | | | | | | | | | |
| 18 | 1 | 3-3 | 1 | 6-8 | | | | | | | | | | | | |
| 24 | 1 | 3-3 | 1 | 7-3 | 1 | 8-4 | | | | | | | | | | |
| 30 | 1 | 3-3 | 1 | 7-3 | 1 | 9-8 | | | | | | | | | | |
| 36 | 1 | 3-3 | 1 | 7-3 | 2 | 11-2 | | | | | | | | | | |
| 42 | 1 | 3-3 | 1 | 7-3 | 1 | 11-3 | 1 | 12-6 | | | | | | | | |
| 48 | 1 | 3-3 | 1 | 7-3 | 1 | 11-3 | 2 | 14-0 | | | | | | | | |
| 54 | 1 | 3-3 | 1 | 7-3 | 1 | 11-3 | 1 | 15-3 | 1 | 15-4 | | | | | | |
| 60 | 1 | 3-3 | 1 | 7-3 | 1 | 11-3 | 1 | 15-3 | 2 | 17-0 | | | | | | |
| 66 | 1 | 3-3 | 1 | 7-3 | 1 | 11-3 | 1 | 15-3 | 3 | 19-0 | | | | | | |
| 72 | 1 | 3-4 | 1 | 7-4 | 1 | 11-4 | 1 | 15-4 | 1 | 19-4 | 2 | 20-6 | | | | |
| 84 | 1 | 3-5 | 1 | 7-5 | 1 | 11-5 | 1 | 15-5 | 1 | 19-5 | 3 | 23-3 | | | | |
| 96 | 1 | 3-4 | 1 | 7-10 | 1 | 11-10 | 1 | 15-7 | 1 | 19-4 | 1 | 23-1 | 3 | 26-3 | | |
| 108 | 1 | 3-0 | 1 | 7-6 | 1 | 11-6 | 1 | 14-6 | 1 | 19-6 | 1 | 23-3 | 1 | 27-0 | 3 | 28-7 |

| PIPE DIA | YL1 NO | YL1 LGTH | YL2 NO | YL2 LGTH | YL3 NO | YL3 LGTH | YL4 NO | YL4 LGTH | YL5 NO | YL5 LGTH | YL6 NO | YL6 LGTH | YL7 NO | YL7 LGTH | YL8 NO | YL8 LGTH |
|---|---|---|---|---|---|---|---|---|---|---|---|---|---|---|---|---|
| 15 | 1 | 4-10 | 1 | 8-1 | | | | | | | | | | | | |
| 18 | 1 | 4-10 | 1 | 9-3 | | | | | | | | | | | | |
| 24 | 1 | 4-10 | 1 | 9-10 | 1 | 11-7 | | | | | | | | | | |
| 30 | 1 | 4-10 | 1 | 9-10 | 1 | 13-6 | | | | | | | | | | |
| 36 | 1 | 4-10 | 1 | 9-10 | 2 | 15-7 | | | | | | | | | | |
| 42 | 1 | 4-10 | 1 | 9-10 | 1 | 15-10 | 1 | 17-6 | | | | | | | | |
| 48 | 1 | 4-10 | 1 | 9-10 | 1 | 15-10 | 2 | 19-7 | | | | | | | | |
| 54 | 1 | 4-10 | 1 | 9-10 | 1 | 15-10 | 1 | 20-10 | 1 | 21-6 | | | | | | |
| 60 | 1 | 4-10 | 1 | 9-10 | 1 | 15-10 | 1 | 20-10 | 2 | 23-10 | | | | | | |
| 66 | 1 | 4-11 | 1 | 9-11 | 1 | 15-11 | 1 | 20-11 | 2 | 26-9 | | | | | | |
| 72 | 1 | 4-11 | 1 | 9-11 | 1 | 15-11 | 1 | 20-11 | 1 | 26-11 | 2 | 28-7 | | | | |
| 84 | 1 | 4-11 | 1 | 9-11 | 1 | 15-11 | 1 | 20-11 | 1 | 26-11 | 3 | 33-4 | | | | |
| 96 | 1 | 4-2 | 1 | 10-2 | 1 | 15-2 | 1 | 20-2 | 1 | 26-5 | 1 | 32-5 | 3 | 37-0 | | |
| 108 | 1 | 4-4 | 1 | 10-4 | 1 | 15-4 | 1 | 20-4 | 1 | 25-4 | 1 | 31-4 | 1 | 36-4 | 4 | 40-10 |

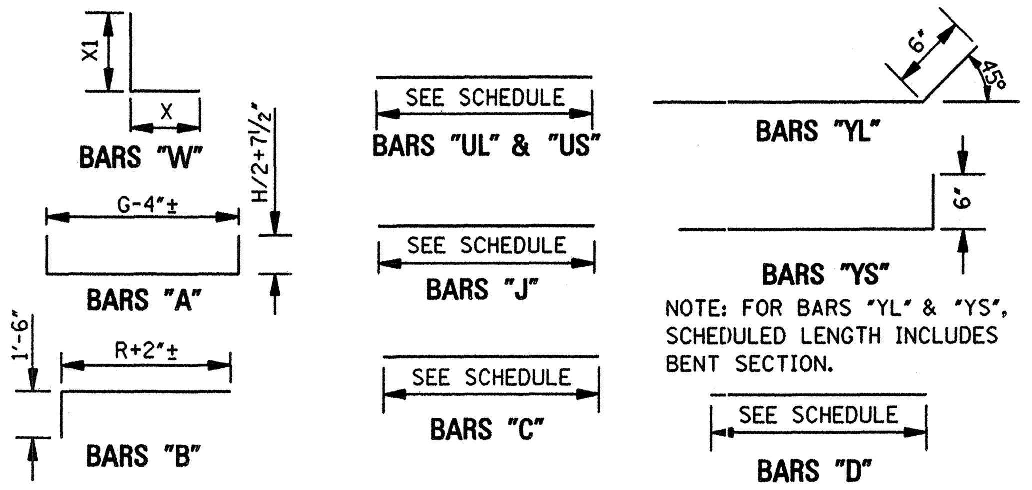


## BAR BENDING DETAILS

NOTE: WHENEVER THE COMPUTED LENGTH OF BAR EXCEEDS 30', THE SCHEDULED LENGTH INCLUDES A 12" LAP. ALL BARS ARE #4 EXCEPT BARS "W". SEE SCHEDULE FOR SIZE OF BARS "W". IN BAR DESIGNATIONS (e.g. "YS" & "YL"), S DENOTES SHORT WING AND L DENOTES LONG WING.

GENERAL NOTES:

1. SPECIFICATIONS: MISSISSIPPI DEPARTMENT OF TRANSPORTATION, LATEST EDITION.
2. ALL CONCRETE SHALL BE CLASS "B".
3. ALL EXPOSED EDGES SHALL BE CHAMFERED ¾".
4. EXPOSED CONCRETE SURFACES SHALL BE FINISHED IN ACCORDANCE WITH THE APPLICABLE SECTION OF THE MDOT SPECIFICATIONS.
5. ALL LENGTHS AND QUANTITIES IN THE TABLES HEREON ARE BASED ON CONCRETE PIPE.
6. QUANTITIES SHOWN SHALL BE THE BASIS FOR FINAL PAYMENT UNLESS AUTHORIZED MODIFICATIONS ARE MADE.

### DIMENSIONS AND REINFORCING FOR FLARED HEADWALL FOR SINGLE LINE PIPE CULVERT

| PIPE DIA | A | B | E | G | X | Y | Z | A NO | A LGTH | B NO | B LGTH | C NO | C LGTH | D NO | D LGTH | PAY QTY 1-HEADWALL CONC CU YDS | STEEL LBS |
|---|---|---|---|---|---|---|---|---|---|---|---|---|---|---|---|---|---|
| 15 | - | - | - | 3-8½ | 7-8 | 2-6 | - | 4 | 7-0 | 5 | 6-10 | 2 | 2-8 | 2 | 1-10 | 1.28 | 125 |
| 18 | - | - | - | 4-0 | 8-9⅜ | 2-9⅜ | - | 4 | 7-8 | 5 | 7-8 | 2 | 3-0 | 2 | 2-0 | 1.63 | 142 |
| 24 | - | - | - | 4-8 | 11-1½ | 3-5½ | - | 4 | 8-11 | 6 | 9-4 | 2 | 3-7 | 2 | 2-3 | 2.42 | 211 |
| 30 | - | - | - | 5-4⅝ | 13-2⅛ | 4-2⅛ | - | 4 | 10-3 | 7 | 10-8 | 2 | 4-2 | 2 | 2-6 | 3.24 | 262 |
| 36 | - | - | - | 6-0⅛ | 15-3⅝ | 4-9⅝ | - | 4 | 11-5 | 7 | 12-2 | 2 | 4-9 | 2 | 2-9 | 4.22 | 358 |
| 42 | - | - | - | 6-8¼ | 17-3¾ | 5-5¾ | - | 4 | 12-8 | 8 | 13-6 | 2 | 5-4 | 2 | 3-0 | 5.29 | 429 |
| 48 | - | - | - | 7-4¼ | 19-5⅞ | 6-1⅞ | - | 4 | 13-11 | 9 | 15-0 | 2 | 5-11 | 2 | 3-3 | 6.55 | 557 |
| 54 | - | - | - | 8-1½ | 21-7 | 6-11 | - | 4 | 15-4 | 9 | 16-4 | 2 | 6-6 | 2 | 3-6 | 7.86 | 633 |
| 60 | - | - | - | 8-9⅝ | 23-11⅛ | 7-7⅛ | - | 4 | 16-7 | 10 | 18-0 | 2 | 7-1 | 2 | 3-9 | 9.49 | 796 |
| 66 | - | - | - | 9-7 | 26-7¼ | 8-3¼ | - | 4 | 18-1 | 11 | 20-0 | 2 | 7-10 | 2 | 4-3 | 12.59 | 1013 |
| 72 | - | - | - | 10-4¼ | 28-7⅜ | 8-11⅜ | - | 4 | 19-5 | 11 | 21-4 | 2 | 8-6 | 2 | 4-7 | 15.54 | 1193 |
| 84 | 3-2 | 22-4 | 2-0 | 11-10¾ | 32-7½ | 10-3½ | - | 4 | 22-2 | 13 | 24-0 | 2 | 9-8 | 2 | 5-3 | 21.40 | 1639 |
| 96 | 3-6 | 25-0 | 2-0 | 13-3 | 36-7⅝ | 11-7⅝ | - | 4 | 24-7 | 15 | 26-8 | 2 | 10-9 | 2 | 5-9 | 26.49 | 2155 |
| 108 | 4-0 | 27-8 | 2-0 | 14-9½ | 40-7⅞ | 12-11⅞ | - | 4 | 27-4 | 16 | 29-4 | 2 | 12-0 | 2 | 6-4 | 34.16 | 2775 |

| PIPE DIA | J1 NO | J1 LGTH | J2 NO | J2 LGTH | J3 NO | J3 LGTH | J4 NO | J4 LGTH | J5 NO | J5 LGTH | J6 NO | J6 LGTH | J7 NO | J7 LGTH | J8 NO | J8 LGTH | J9 NO | J9 LGTH | J10 NO | J10 LGTH |
|---|---|---|---|---|---|---|---|---|---|---|---|---|---|---|---|---|---|---|---|---|
| 15 | 1 | 3-10 | 1 | 4-10 | 1 | 5-10 | 1 | 6-10 | 1 | 7-10 | 1 | 8-3 | | | | | | | | |
| 18 | 1 | 4-2 | 1 | 5-2 | 1 | 6-2 | 1 | 7-2 | 1 | 8-2 | 1 | 9-2 | 1 | 9-4 | | | | | | |
| 24 | 1 | 4-10 | 1 | 5-10 | 1 | 6-10 | 1 | 7-10 | 1 | 8-10 | 1 | 9-10 | 1 | 10-10 | 1 | 11-8 | | | | |
| 30 | 1 | 5-7 | 1 | 6-7 | 1 | 7-7 | 1 | 8-7 | 1 | 9-7 | 1 | 10-7 | 1 | 11-7 | 1 | 12-7 | 1 | 13-7 | | |
| 36 | 1 | 6-2 | 1 | 7-2 | 1 | 8-2 | 1 | 9-2 | 1 | 10-2 | 1 | 11-2 | 1 | 12-2 | 1 | 13-2 | 1 | 14-2 | 1 | 15-2 |
| 42 | 1 | 6-10 | 1 | 7-10 | 1 | 8-10 | 1 | 9-10 | 1 | 10-10 | 1 | 11-10 | 1 | 12-10 | 1 | 13-10 | 1 | 14-10 | 1 | 15-10 |
| 48 | 1 | 7-6 | 1 | 8-6 | 1 | 9-6 | 1 | 10-6 | 1 | 11-6 | 1 | 12-6 | 1 | 13-6 | 1 | 14-6 | 1 | 15-6 | 1 | 16-6 |
| 54 | 1 | 8-4 | 1 | 9-4 | 1 | 10-4 | 1 | 11-4 | 1 | 12-4 | 1 | 13-4 | 1 | 14-4 | 1 | 15-4 | 1 | 16-4 | 1 | 17-4 |
| 60 | 1 | 9-0 | 1 | 10-0 | 1 | 11-0 | 1 | 12-0 | 1 | 13-0 | 1 | 14-0 | 1 | 15-0 | 1 | 16-0 | 1 | 17-0 | 1 | 18-0 |
| 66 | 1 | 9-9 | 1 | 10-9 | 1 | 11-9 | 1 | 12-9 | 1 | 13-9 | 1 | 14-9 | 1 | 15-9 | 1 | 16-9 | 1 | 17-9 | 1 | 18-9 |
| 72 | 1 | 10-6 | 1 | 11-6 | 1 | 12-6 | 1 | 13-6 | 1 | 14-6 | 1 | 15-6 | 1 | 16-6 | 1 | 17-6 | 1 | 18-6 | 1 | 19-6 |
| 84 | 1 | 12-1 | 1 | 13-1 | 1 | 14-1 | 1 | 15-1 | 1 | 16-1 | 1 | 17-1 | 1 | 18-1 | 1 | 19-1 | 1 | 20-1 | 1 | 21-1 |
| 96 | 1 | 13-5 | 1 | 14-5 | 1 | 15-5 | 1 | 16-5 | 1 | 17-5 | 1 | 18-5 | 1 | 19-5 | 1 | 20-5 | 1 | 21-5 | 1 | 22-5 |
| 108 | 1 | 15-0 | 1 | 16-0 | 1 | 17-0 | 1 | 18-0 | 1 | 19-0 | 1 | 20-0 | 1 | 21-0 | 1 | 22-0 | 1 | 23-0 | 1 | 24-0 |

| PIPE DIA | J11 NO | J11 LGTH | J12 NO | J12 LGTH | J13 NO | J13 LGTH | J14 NO | J14 LGTH | J15 NO | J15 LGTH | J16 NO | J16 LGTH | J17 NO | J17 LGTH | J18 NO | J18 LGTH | J19 NO | J19 LGTH | J20 NO | J20 LGTH |
|---|---|---|---|---|---|---|---|---|---|---|---|---|---|---|---|---|---|---|---|---|
| 15 | | | | | | | | | | | | | | | | | | | | |
| 18 | | | | | | | | | | | | | | | | | | | | |
| 24 | | | | | | | | | | | | | | | | | | | | |
| 30 | | | | | | | | | | | | | | | | | | | | |
| 36 | 1 | 15-10 | | | | | | | | | | | | | | | | | | |
| 42 | 1 | 16-10 | 1 | 17-10 | | | | | | | | | | | | | | | | |
| 48 | 1 | 17-6 | 1 | 18-6 | 1 | 19-6 | 1 | 20-0 | | | | | | | | | | | | |
| 54 | 1 | 18-4 | 1 | 19-4 | 1 | 20-4 | 1 | 21-4 | 1 | 22-1 | | | | | | | | | | |
| 60 | 1 | 19-0 | 1 | 20-0 | 1 | 21-0 | 1 | 22-0 | 1 | 23-0 | 1 | 24-0 | 1 | 24-5 | | | | | | |
| 66 | 1 | 19-9 | 1 | 20-9 | 1 | 21-9 | 1 | 22-9 | 1 | 23-9 | 1 | 24-9 | 1 | 25-9 | 1 | 26-9 | 1 | 27-2 | | |
| 72 | 1 | 20-6 | 1 | 21-6 | 1 | 22-6 | 1 | 23-6 | 1 | 24-6 | 1 | 25-6 | 1 | 26-6 | 1 | 27-6 | 1 | 28-6 | 1 | 29-2 |
| 84 | 1 | 22-1 | 1 | 23-1 | 1 | 24-1 | 1 | 25-1 | 1 | 26-1 | 1 | 27-1 | 1 | 28-1 | 1 | 29-1 | 1 | 31-1 | 1 | 32-1 |
| 96 | 1 | 23-5 | 1 | 24-5 | 1 | 25-5 | 1 | 26-5 | 1 | 27-5 | 1 | 28-5 | 1 | 29-5 | 1 | 31-5 | 1 | 32-5 | 1 | 33-5 |
| 108 | 1 | 25-0 | 1 | 26-0 | 1 | 27-0 | 1 | 28-0 | 1 | 29-0 | 1 | 30-0 | 1 | 32-0 | 1 | 33-0 | 1 | 34-0 | 1 | 35-0 |

| PIPE DIA | J21 NO | J21 LGTH | J22 NO | J22 LGTH | J23 NO | J23 LGTH | J24 NO | J24 LGTH | J25 NO | J25 LGTH | J26 NO | J26 LGTH | J27 NO | J27 LGTH | J28 NO | J28 LGTH |
|---|---|---|---|---|---|---|---|---|---|---|---|---|---|---|---|---|
| 15 | | | | | | | | | | | | | | | | |
| 18 | | | | | | | | | | | | | | | | |
| 24 | | | | | | | | | | | | | | | | |
| 30 | | | | | | | | | | | | | | | | |
| 36 | | | | | | | | | | | | | | | | |
| 42 | | | | | | | | | | | | | | | | |
| 48 | | | | | | | | | | | | | | | | |
| 54 | | | | | | | | | | | | | | | | |
| 60 | | | | | | | | | | | | | | | | |
| 66 | | | | | | | | | | | | | | | | |
| 72 | | | | | | | | | | | | | | | | |
| 84 | 1 | 33-1 | 1 | 34-1 | 1 | 34-4 | | | | | | | | | | |
| 96 | 1 | 34-5 | 1 | 35-5 | 1 | 36-5 | 1 | 37-5 | 1 | 38-4 | | | | | | |
| 108 | 1 | 36-0 | 1 | 37-0 | 1 | 38-0 | 1 | 39-0 | 1 | 40-0 | 1 | 41-0 | 1 | 42-0 | 1 | 42-5 |

### DIMENSIONS AND REINFORCING FOR FLARED HEADWALL FOR DOUBLE LINE PIPE CULVERT

| PIPE DIA | A | B | E | G | X | Y | Z | A NO | A LGTH | B NO | B LGTH | C NO | C LGTH | D NO | D LGTH | PAY QTY 1-HEADWALL CONC CU YDS | STEEL LBS |
|---|---|---|---|---|---|---|---|---|---|---|---|---|---|---|---|---|---|
| 15 | - | - | - | 6-8¼ | 10-7¾ | 5-5¾ | 1-0 | 4 | 10-0 | 8 | 6-10 | 3 | 2-8 | 4 | 1-10 | 1.76 | 163 |
| 18 | - | - | - | 7-3¼ | 12-0⅝ | 6-0⅝ | 1-0 | 4 | 11-0 | 8 | 7-8 | 3 | 3-0 | 4 | 2-0 | 2.23 | 185 |
| 24 | - | - | - | 8-7⅜ | 15-0⅞ | 7-4⅞ | 1-0 | 4 | 12-11 | 10 | 9-4 | 3 | 3-7 | 4 | 2-3 | 3.27 | 273 |
| 30 | - | - | - | 10-4⅛ | 18-1⅝ | 9-1⅝ | 1-3 | 4 | 15-3 | 11 | 10-8 | 4 | 4-2 | 4 | 2-6 | 4.46 | 343 |
| 36 | - | - | - | 11-10½ | 21-2 | 10-8 | 1-6 | 4 | 17-4 | 13 | 12-2 | 4 | 4-9 | 4 | 2-9 | 5.86 | 476 |
| 42 | - | - | - | 13-6¼ | 24-1¾ | 12-3¾ | 1-9 | 4 | 19-6 | 15 | 13-6 | 4 | 5-4 | 4 | 3-0 | 7.39 | 576 |
| 48 | - | - | - | 15-1¾ | 27-3⅜ | 13-11⅜ | 2-0 | 4 | 21-9 | 16 | 15-0 | 4 | 5-11 | 4 | 3-3 | 9.21 | 734 |
| 54 | - | - | - | 16-11¾ | 30-5¼ | 15-9¼ | 2-3 | 4 | 24-2 | 18 | 16-4 | 5 | 6-6 | 4 | 3-6 | 11.13 | 862 |
| 60 | - | - | - | 18-7⅜ | 33-8⅞ | 17-4⅞ | 2-6 | 4 | 26-5 | 20 | 18-0 | 5 | 7-1 | 4 | 3-9 | 13.47 | 1076 |
| 66 | - | - | - | 20-4¼ | 37-4⅝ | 19-0⅝ | 2-9 | 4 | 28-10 | 21 | 20-0 | 5 | 7-10 | 4 | 4-3 | 17.81 | 1339 |
| 72 | - | - | - | 22-1⅛ | 40-4¼ | 20-8¼ | 3-0 | 4 | 32-2 | 23 | 21-4 | 6 | 8-6 | 4 | 4-7 | 22.05 | 1592 |
| 84 | 3-2 | 36-0 | 15-8 | 25-6¾ | 46-3½ | 23-11½ | 3-6 | 4 | 36-10 | 27 | 24-0 | 6 | 9-8 | 4 | 5-3 | 29.52 | 2154 |
| 96 | 3-6 | 40-7 | 17-7 | 28-10 | 52-2⅝ | 27-2⅝ | 4-0 | 4 | 41-2 | 30 | 26-8 | 7 | 10-9 | 4 | 5-9 | 36.73 | 2780 |
| 108 | 4-0 | 45-2 | 19-6 | 32-3⅝ | 58-2 | 30-6 | 4-6 | 4 | 45-10 | 34 | 29-4 | 7 | 12-0 | 4 | 6-4 | 47.42 | 3564 |

| PIPE DIA | J1 NO | J1 LGTH | J2 NO | J2 LGTH | J3 NO | J3 LGTH | J4 NO | J4 LGTH | J5 NO | J5 LGTH | J6 NO | J6 LGTH | J7 NO | J7 LGTH | J8 NO | J8 LGTH | J9 NO | J9 LGTH | J10 NO | J10 LGTH |
|---|---|---|---|---|---|---|---|---|---|---|---|---|---|---|---|---|---|---|---|---|
| 15 | 1 | 6-10 | 1 | 7-10 | 1 | 8-10 | 1 | 9-10 | 1 | 10-10 | 1 | 11-2 | | | | | | | | |
| 18 | 1 | 7-5 | 1 | 8-5 | 1 | 9-5 | 1 | 10-5 | 1 | 11-5 | 1 | 12-7 | 1 | 12-8 | | | | | | |
| 24 | 1 | 8-9 | 1 | 9-9 | 1 | 10-9 | 1 | 11-9 | 1 | 12-9 | 1 | 13-9 | 1 | 14-9 | 1 | 15-7 | | | | |
| 30 | 1 | 10-6 | 1 | 11-6 | 1 | 12-6 | 1 | 13-6 | 1 | 14-6 | 1 | 15-6 | 1 | 16-6 | 1 | 17-6 | 1 | 18-8 | | |
| 36 | 1 | 12-1 | 1 | 13-1 | 1 | 14-1 | 1 | 15-1 | 1 | 16-1 | 1 | 17-1 | 1 | 18-1 | 1 | 19-1 | 1 | 20-1 | 1 | 21-1 |
| 42 | 1 | 13-8 | 1 | 14-8 | 1 | 15-8 | 1 | 16-8 | 1 | 17-8 | 1 | 18-8 | 1 | 19-8 | 1 | 20-8 | 1 | 21-8 | 1 | 22-8 |
| 48 | 1 | 15-4 | 1 | 16-4 | 1 | 17-4 | 1 | 18-4 | 1 | 19-4 | 1 | 20-4 | 1 | 21-4 | 1 | 22-4 | 1 | 23-4 | 1 | 24-4 |
| 54 | 1 | 17-2 | 1 | 18-2 | 1 | 19-2 | 1 | 20-2 | 1 | 21-2 | 1 | 22-2 | 1 | 23-2 | 1 | 24-2 | 1 | 25-2 | 1 | 26-2 |
| 60 | 1 | 18-9 | 1 | 19-9 | 1 | 20-9 | 1 | 21-9 | 1 | 22-9 | 1 | 23-9 | 1 | 24-9 | 1 | 25-9 | 1 | 26-9 | 1 | 27-9 |
| 66 | 1 | 20-6 | 1 | 21-6 | 1 | 22-6 | 1 | 23-6 | 1 | 24-6 | 1 | 25-6 | 1 | 26-6 | 1 | 27-6 | 1 | 28-6 | 1 | 29-6 |
| 72 | 1 | 22-3 | 1 | 23-3 | 1 | 24-3 | 1 | 25-3 | 1 | 26-3 | 1 | 27-3 | 1 | 28-3 | 1 | 29-3 | 1 | 31-3 | 1 | 32-3 |
| 84 | 1 | 25-9 | 1 | 26-9 | 1 | 27-9 | 1 | 28-9 | 1 | 29-9 | 1 | 31-9 | 1 | 32-9 | 1 | 33-9 | 1 | 34-9 | 1 | 35-9 |
| 96 | 1 | 29-0 | 1 | 30-0 | 1 | 32-0 | 1 | 33-0 | 1 | 34-0 | 1 | 35-0 | 1 | 36-0 | 1 | 37-0 | 1 | 38-0 | 1 | 39-0 |
| 108 | 1 | 33-6 | 1 | 34-6 | 1 | 35-6 | 1 | 36-6 | 1 | 37-6 | 1 | 38-6 | 1 | 39-6 | 1 | 40-6 | 1 | 41-6 | 1 | 42-6 |

| PIPE DIA | J11 NO | J11 LGTH | J12 NO | J12 LGTH | J13 NO | J13 LGTH | J14 NO | J14 LGTH | J15 NO | J15 LGTH | J16 NO | J16 LGTH | J17 NO | J17 LGTH | J18 NO | J18 LGTH | J19 NO | J19 LGTH | J20 NO | J20 LGTH |
|---|---|---|---|---|---|---|---|---|---|---|---|---|---|---|---|---|---|---|---|---|
| 15 | | | | | | | | | | | | | | | | | | | | |
| 18 | | | | | | | | | | | | | | | | | | | | |
| 24 | | | | | | | | | | | | | | | | | | | | |
| 30 | | | | | | | | | | | | | | | | | | | | |
| 36 | 1 | 21-8 | | | | | | | | | | | | | | | | | | |
| 42 | 1 | 23-8 | 1 | 24-8 | | | | | | | | | | | | | | | | |
| 48 | 1 | 25-4 | 1 | 26-4 | 1 | 27-4 | 1 | 27-9 | | | | | | | | | | | | |
| 54 | 1 | 27-2 | 1 | 28-2 | 1 | 29-2 | 1 | 31-2 | 1 | 31-11 | | | | | | | | | | |
| 60 | 1 | 28-9 | 1 | 29-9 | 1 | 31-9 | 1 | 32-9 | 1 | 33-9 | 1 | 34-9 | 1 | 35-3 | | | | | | |
| 66 | 1 | 31-6 | 1 | 32-6 | 1 | 33-6 | 1 | 34-6 | 1 | 35-6 | 1 | 36-6 | 1 | 37-6 | 1 | 38-6 | 1 | 38-11 | | |
| 72 | 1 | 33-3 | 1 | 34-3 | 1 | 35-3 | 1 | 36-3 | 1 | 37-3 | 1 | 38-3 | 1 | 39-3 | 1 | 40-3 | 1 | 41-3 | 1 | 41-11 |
| 84 | 1 | 36-9 | 1 | 37-9 | 1 | 38-9 | 1 | 39-9 | 1 | 40-9 | 1 | 41-9 | 1 | 42-9 | 1 | 43-9 | 1 | 44-9 | 1 | 45-9 |
| 96 | 1 | 40-0 | 1 | 41-0 | 1 | 42-0 | 1 | 43-0 | 1 | 44-0 | 1 | 45-0 | 1 | 46-0 | 1 | 47-0 | 1 | 48-0 | 1 | 49-0 |
| 108 | 1 | 43-6 | 1 | 44-6 | 1 | 45-6 | 1 | 46-6 | 1 | 47-6 | 1 | 48-6 | 1 | 49-6 | 1 | 50-6 | 1 | 51-6 | 1 | 52-6 |

| PIPE DIA | J21 NO | J21 LGTH | J22 NO | J22 LGTH | J23 NO | J23 LGTH | J24 NO | J24 LGTH | J25 NO | J25 LGTH | J26 NO | J26 LGTH | J27 NO | J27 LGTH | J28 NO | J28 LGTH |
|---|---|---|---|---|---|---|---|---|---|---|---|---|---|---|---|---|
| 15 | | | | | | | | | | | | | | | | |
| 18 | | | | | | | | | | | | | | | | |
| 24 | | | | | | | | | | | | | | | | |
| 30 | | | | | | | | | | | | | | | | |
| 36 | | | | | | | | | | | | | | | | |
| 42 | | | | | | | | | | | | | | | | |
| 48 | | | | | | | | | | | | | | | | |
| 54 | | | | | | | | | | | | | | | | |
| 60 | | | | | | | | | | | | | | | | |
| 66 | | | | | | | | | | | | | | | | |
| 72 | | | | | | | | | | | | | | | | |
| 84 | 1 | 46-9 | 1 | 47-9 | 1 | 47-11 | | | | | | | | | | |
| 96 | 1 | 50-0 | 1 | 51-0 | 1 | 52-0 | 1 | 53-0 | 1 | 53-11 | | | | | | |
| 108 | 1 | 53-6 | 1 | 54-6 | 1 | 55-6 | 1 | 56-6 | 1 | 57-6 | 1 | 58-6 | 1 | 59-6 | 1 | 59-11 |

### DIMENSIONS AND REINFORCING FOR FLARED HEADWALL FOR TRIPLE LINE PIPE CULVERT

| PIPE DIA | A | B | E | G | X | Y | Z | A NO | A LGTH | B NO | B LGTH | C NO | C LGTH | D NO | D LGTH | PAY QTY 1-HEADWALL CONC CU YDS | STEEL LBS |
|---|---|---|---|---|---|---|---|---|---|---|---|---|---|---|---|---|---|
| 15 | - | - | - | 9-8 | 13-7½ | 8-5½ | 1-0 | 4 | 13-0 | 11 | 6-10 | 4 | 2-8 | 6 | 1-10 | 2.25 | 201 |
| 18 | - | - | - | 10-6⅜ | 15-4 | 9-4 | 1-0 | 4 | 14-3 | 12 | 7-8 | 4 | 3-0 | 6 | 2-0 | 2.82 | 231 |
| 24 | - | - | - | 12-6⅝ | 19-0 | 11-4¼ | 1-0 | 4 | 16-10 | 14 | 9-4 | 4 | 3-7 | 6 | 2-3 | 4.13 | 335 |
| 30 | - | - | - | 15-3½ | 23-1 | 14-1 | 1-3 | 4 | 20-2 | 16 | 10-8 | 6 | 4-2 | 6 | 2-6 | 5.68 | 430 |
| 36 | - | - | - | 17-9 | 27-0½ | 16-6½ | 1-6 | 4 | 23-2 | 19 | 12-2 | 6 | 4-9 | 6 | 2-9 | 7.50 | 593 |
| 42 | - | - | - | 20-4¼ | 30-11¾ | 19-1¾ | 1-9 | 4 | 26-4 | 21 | 13-6 | 6 | 5-4 | 6 | 3-0 | 9.50 | 716 |
| 48 | - | - | - | 22-11⅜ | 35-0⅞ | 21-8⅞ | 2-0 | 4 | 29-7 | 24 | 15-0 | 6 | 5-11 | 6 | 3-3 | 11.87 | 924 |
| 54 | - | - | - | 25-10 | 39-3½ | 24-7½ | 2-3 | 4 | 34-0 | 27 | 16-4 | 8 | 6-6 | 6 | 3-6 | 14.40 | 1098 |
| 60 | - | - | - | 28-5¼ | 43-6¾ | 27-2¾ | 2-6 | 4 | 37-3 | 29 | 18-0 | 8 | 7-1 | 6 | 3-9 | 17.44 | 1351 |
| 66 | - | - | - | 31-1⅝ | 48-1⅛ | 29-9⅛ | 2-9 | 4 | 40-8 | 32 | 20-0 | 8 | 7-10 | 6 | 4-3 | 23.04 | 1670 |
| 72 | - | - | - | 33-10 | 52-1 | 32-5 | 3-0 | 4 | 43-11 | 35 | 21-4 | 10 | 8-6 | 6 | 4-7 | 28.55 | 1985 |
| 84 | 3-2 | 49-8 | 29-4 | 39-2¾ | 59-11⅜ | 37-7⅜ | 3-6 | 4 | 50-6 | 40 | 24-0 | 10 | 9-8 | 6 | 5-3 | 37.65 | 2647 |
| 96 | 3-6 | 56-2 | 33-2 | 44-5⅛ | 67-9¾ | 42-9¾ | 4-0 | 4 | 56-9 | 45 | 26-8 | 14 | 10-9 | 6 | 5-9 | 46.98 | 3415 |
| 108 | 4-0 | 62-8 | 37-0 | 49-9⅞ | 75-8 | 48-0 | 4-6 | 4 | 64-4 | 50 | 29-4 | 14 | 12-0 | 6 | 6-4 | 60.68 | 4331 |

| PIPE DIA | J1 NO | J1 LGTH | J2 NO | J2 LGTH | J3 NO | J3 LGTH | J4 NO | J4 LGTH | J5 NO | J5 LGTH | J6 NO | J6 LGTH | J7 NO | J7 LGTH | J8 NO | J8 LGTH | J9 NO | J9 LGTH | J10 NO | J10 LGTH |
|---|---|---|---|---|---|---|---|---|---|---|---|---|---|---|---|---|---|---|---|---|
| 15 | 1 | 9-10 | 1 | 10-10 | 1 | 11-10 | 1 | 12-10 | 1 | 13-10 | 1 | 14-2 | | | | | | | | |
| 18 | 1 | 10-8 | 1 | 11-8 | 1 | 12-8 | 1 | 13-8 | 1 | 14-8 | 1 | 15-10 | 1 | 15-11 | | | | | | |
| 24 | 1 | 12-9 | 1 | 13-9 | 1 | 14-9 | 1 | 15-9 | 1 | 16-9 | 1 | 17-9 | 1 | 18-9 | 1 | 19-6 | | | | |
| 30 | 1 | 15-5 | 1 | 16-5 | 1 | 17-5 | 1 | 18-5 | 1 | 19-5 | 1 | 20-5 | 1 | 21-5 | 1 | 22-5 | 1 | 23-7 | | |
| 36 | 1 | 17-11 | 1 | 18-11 | 1 | 19-11 | 1 | 20-11 | 1 | 21-11 | 1 | 22-11 | 1 | 23-11 | 1 | 24-11 | 1 | 25-11 | 1 | 26-11 |
| 42 | 1 | 20-6 | 1 | 21-6 | 1 | 22-6 | 1 | 23-6 | 1 | 24-6 | 1 | 25-6 | 1 | 26-6 | 1 | 27-6 | 1 | 28-6 | 1 | 29-6 |
| 48 | 1 | 23-1 | 1 | 24-1 | 1 | 25-1 | 1 | 26-1 | 1 | 27-1 | 1 | 28-1 | 1 | 29-1 | 1 | 31-1 | 1 | 32-1 | 1 | 33-1 |
| 54 | 1 | 26-0 | 1 | 27-0 | 1 | 28-0 | 1 | 29-0 | 1 | 30-0 | 1 | 32-0 | 1 | 33-0 | 1 | 34-0 | 1 | 35-0 | 1 | 36-0 |
| 60 | 1 | 28-7 | 1 | 29-7 | 1 | 31-7 | 1 | 32-7 | 1 | 33-7 | 1 | 34-7 | 1 | 35-7 | 1 | 36-7 | 1 | 37-7 | 1 | 38-7 |
| 66 | 1 | 32-4 | 1 | 33-4 | 1 | 34-4 | 1 | 35-4 | 1 | 36-4 | 1 | 37-4 | 1 | 38-4 | 1 | 39-4 | 1 | 40-4 | 1 | 41-4 |
| 72 | 1 | 35-0 | 1 | 36-0 | 1 | 37-0 | 1 | 38-0 | 1 | 39-0 | 1 | 40-0 | 1 | 41-0 | 1 | 42-0 | 1 | 43-0 | 1 | 44-0 |
| 84 | 1 | 40-5 | 1 | 41-5 | 1 | 42-5 | 1 | 43-5 | 1 | 44-5 | 1 | 45-5 | 1 | 46-5 | 1 | 47-5 | 1 | 48-5 | 1 | 49-5 |
| 96 | 1 | 45-7 | 1 | 46-7 | 1 | 47-7 | 1 | 48-7 | 1 | 49-7 | 1 | 50-7 | 1 | 51-7 | 1 | 52-7 | 1 | 53-7 | 1 | 54-7 |
| 108 | 1 | 51-0 | 1 | 52-0 | 1 | 53-0 | 1 | 54-0 | 1 | 55-0 | 1 | 56-0 | 1 | 57-0 | 1 | 58-0 | 1 | 59-0 | 1 | 60-0 |

| PIPE DIA | J11 NO | J11 LGTH | J12 NO | J12 LGTH | J13 NO | J13 LGTH | J14 NO | J14 LGTH | J15 NO | J15 LGTH | J16 NO | J16 LGTH | J17 NO | J17 LGTH | J18 NO | J18 LGTH | J19 NO | J19 LGTH | J20 NO | J20 LGTH |
|---|---|---|---|---|---|---|---|---|---|---|---|---|---|---|---|---|---|---|---|---|
| 15 | | | | | | | | | | | | | | | | | | | | |
| 18 | | | | | | | | | | | | | | | | | | | | |
| 24 | | | | | | | | | | | | | | | | | | | | |
| 30 | | | | | | | | | | | | | | | | | | | | |
| 36 | 1 | 27-6 | | | | | | | | | | | | | | | | | | |
| 42 | 1 | 31-6 | 1 | 32-6 | | | | | | | | | | | | | | | | |
| 48 | 1 | 34-1 | 1 | 35-1 | 1 | 36-1 | 1 | 36-7 | | | | | | | | | | | | |
| 54 | 1 | 37-0 | 1 | 38-0 | 1 | 39-0 | 1 | 40-0 | 1 | 40-10 | | | | | | | | | | |
| 60 | 1 | 39-7 | 1 | 40-7 | 1 | 41-7 | 1 | 42-7 | 1 | 43-7 | 1 | 44-7 | 1 | 45-1 | | | | | | |
| 66 | 1 | 42-4 | 1 | 43-4 | 1 | 44-4 | 1 | 45-4 | 1 | 46-4 | 1 | 47-4 | 1 | 48-4 | 1 | 49-4 | 1 | 49-8 | | |
| 72 | 1 | 45-0 | 1 | 46-0 | 1 | 47-0 | 1 | 48-0 | 1 | 49-0 | 1 | 50-0 | 1 | 51-0 | 1 | 52-0 | 1 | 53-0 | 1 | 53-8 |
| 84 | 1 | 50-5 | 1 | 51-5 | 1 | 52-5 | 1 | 53-5 | 1 | 54-5 | 1 | 55-5 | 1 | 56-5 | 1 | 57-5 | 1 | 58-5 | 1 | 59-5 |
| 96 | 1 | 55-7 | 1 | 56-7 | 1 | 57-7 | 1 | 58-7 | 1 | 59-7 | 1 | 61-7 | 1 | 62-7 | 1 | 63-7 | 1 | 64-7 | 1 | 65-7 |
| 108 | 1 | 62-0 | 1 | 63-0 | 1 | 64-0 | 1 | 65-0 | 1 | 66-0 | 1 | 67-0 | 1 | 68-0 | 1 | 69-0 | 1 | 70-0 | 1 | 71-0 |

| PIPE DIA | J21 NO | J21 LGTH | J22 NO | J22 LGTH | J23 NO | J23 LGTH | J24 NO | J24 LGTH | J25 NO | J25 LGTH | J26 NO | J26 LGTH | J27 NO | J27 LGTH | J28 NO | J28 LGTH |
|---|---|---|---|---|---|---|---|---|---|---|---|---|---|---|---|---|
| 15 | | | | | | | | | | | | | | | | |
| 18 | | | | | | | | | | | | | | | | |
| 24 | | | | | | | | | | | | | | | | |
| 30 | | | | | | | | | | | | | | | | |
| 36 | | | | | | | | | | | | | | | | |
| 42 | | | | | | | | | | | | | | | | |
| 48 | | | | | | | | | | | | | | | | |
| 54 | | | | | | | | | | | | | | | | |
| 60 | | | | | | | | | | | | | | | | |
| 66 | | | | | | | | | | | | | | | | |
| 72 | | | | | | | | | | | | | | | | |
| 84 | 1 | 61-5 | 1 | 62-5 | 1 | 62-8 | | | | | | | | | | |
| 96 | 1 | 66-7 | 1 | 67-7 | 1 | 68-7 | 1 | 69-7 | 1 | 70-6 | | | | | | |
| 108 | 1 | 72-0 | 1 | 73-0 | 1 | 74-0 | 1 | 75-0 | 1 | 76-0 | 1 | 77-0 | 1 | 78-0 | 1 | 78-5 |

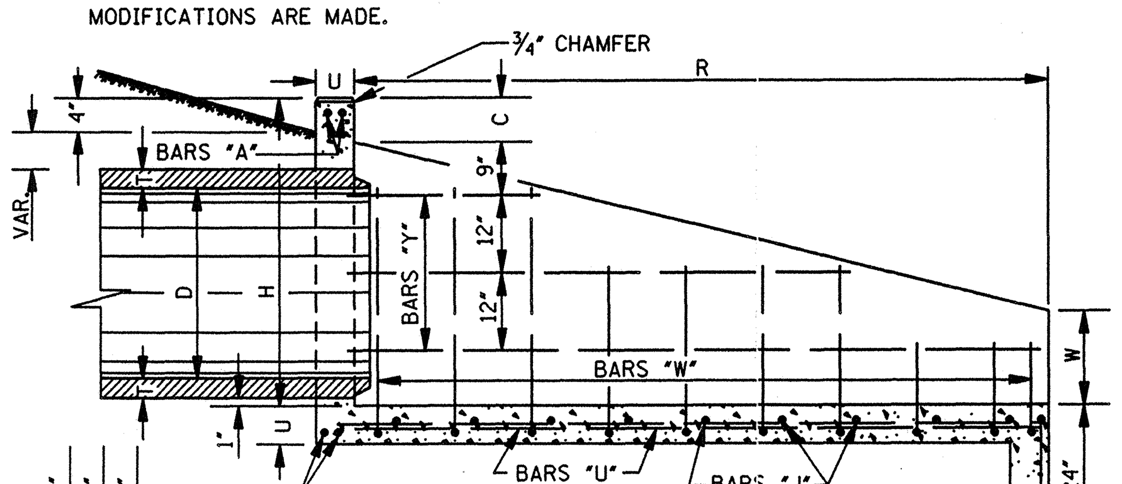


SECTION B–B

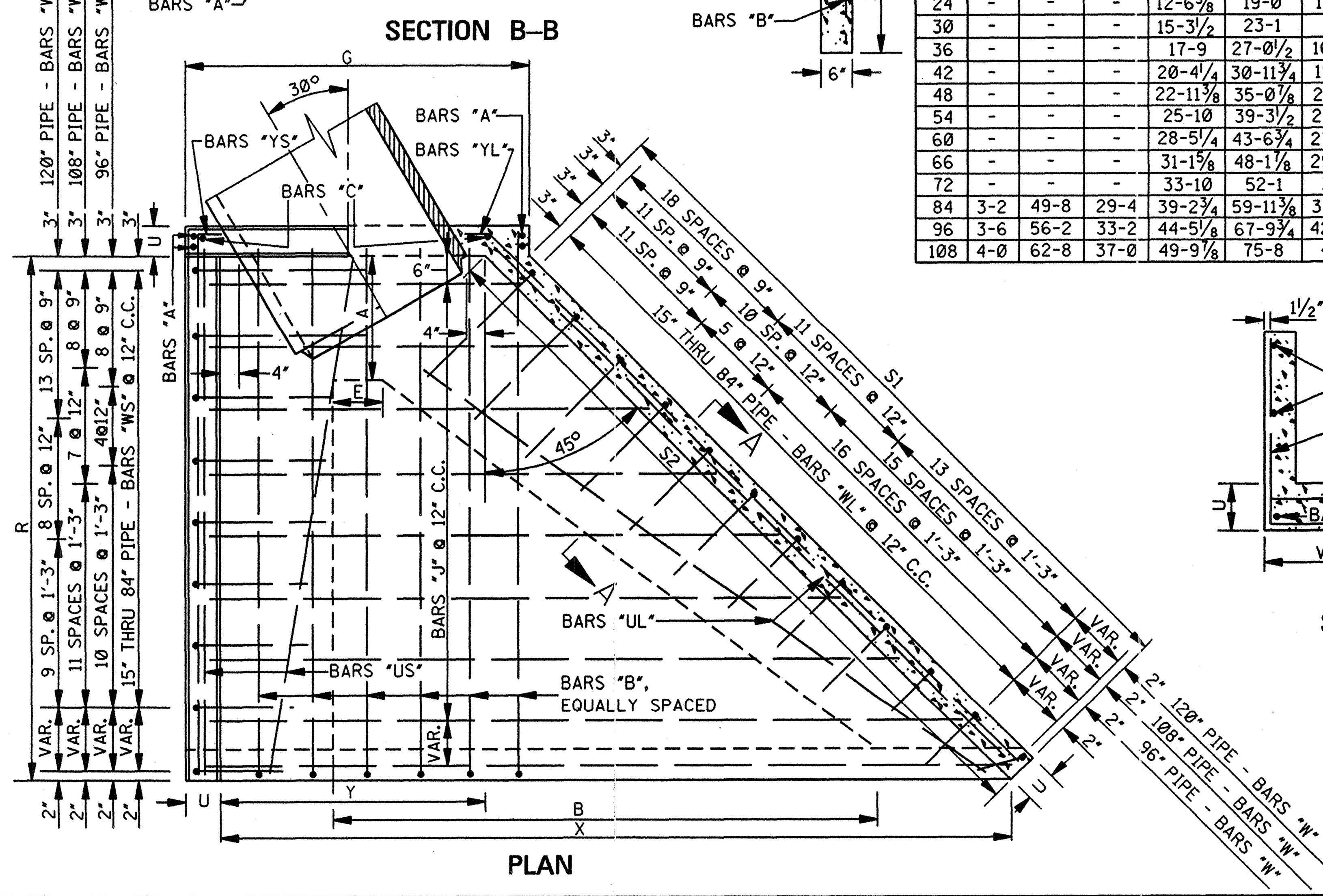


PLAN

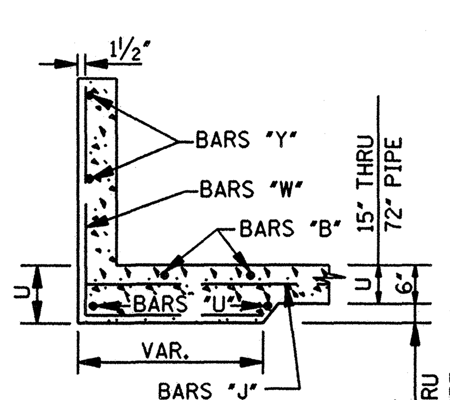


SECTION A–A

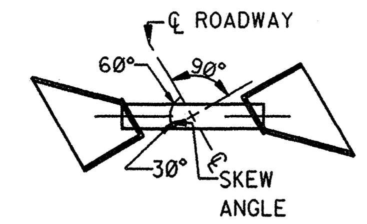


INSTALLATION

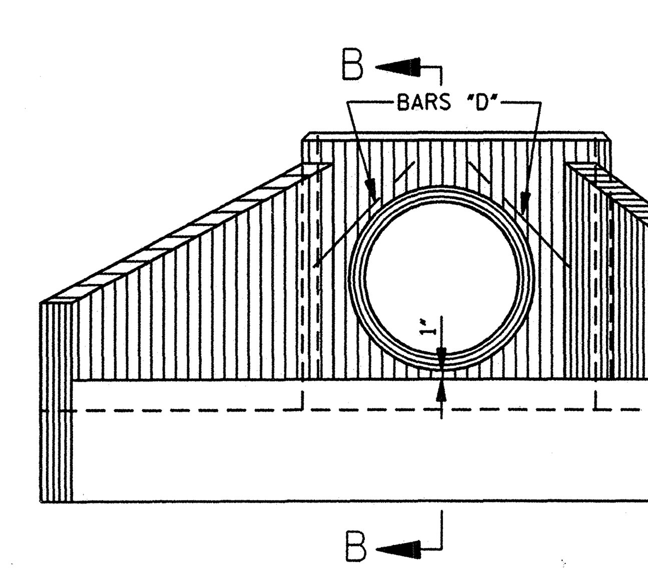


FRONT ELEVATION

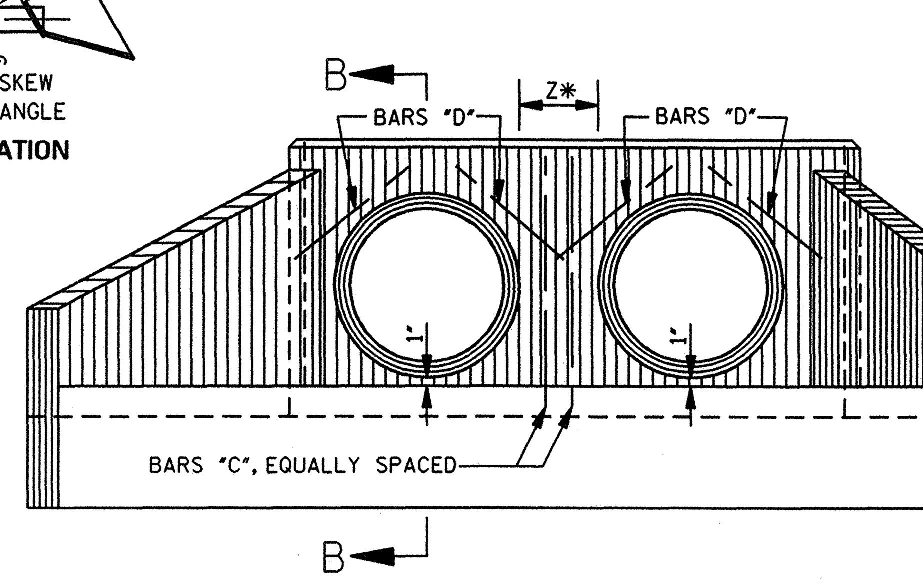


FRONT ELEVATION

*NOTE: MEASURE NORMAL (PERPENDICULAR) TO PIPE.

| BY | REVISION | DATE |
|---|---|---|
| | | |

MISSISSIPPI DEPARTMENT OF TRANSPORTATION
ROADWAY DESIGN DIVISION
STANDARD PLAN

# HEADWALLS FOR CONCRETE PIPE 4:1 SLOPE – 30° SKEW

DEPARTMENT OF TRANSPORTATION MISSISSIPPI ENGLISH

WORKING NUMBER HW-4130

ISSUE DATE: OCTOBER 1, 1998

SHEET NUMBER 347