STATE	PROJECT NO.
MISS.	

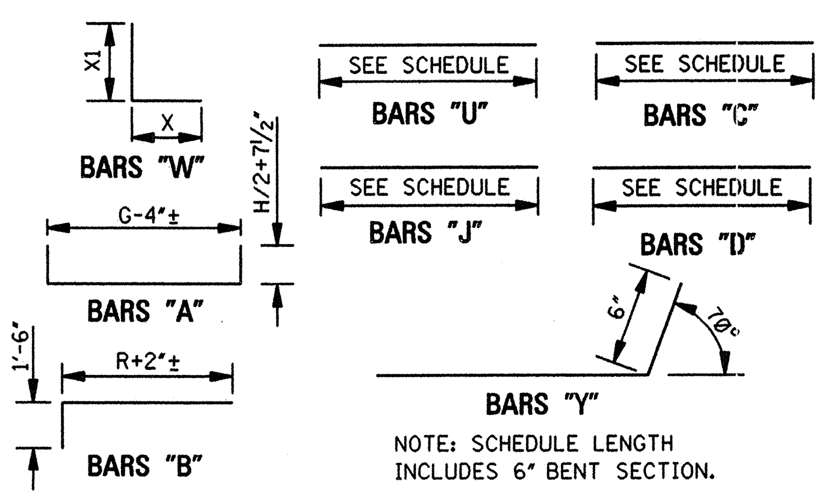

BAR BENDING DETAILS

NOTE: WHENEVER THE COMPUTED LENGTH OF BAR EXCEEDS 30', THE SCHEDULED LENGTH INCLUDES A 12" LAP. ALL BARS ARE #4 EXCEPT BARS "W". SEE SCHEDULE FOR SIZE OF BARS "W".

GENERAL NOTES:

1. SPECIFICATIONS: MISSISSIPPI DEPARTMENT OF TRANSPORTATION, LATEST EDITION.
2. ALL CONCRETE SHALL BE CLASS "B".
3. ALL EXPOSED EDGES SHALL BE CHAMFERED ¾".
4. EXPOSED CONCRETE SURFACES SHALL BE FINISHED IN ACCORDANCE WITH THE APPLICABLE SECTION OF THE MDOT SPECIFICATIONS.
5. ALL LENGTHS AND QUANTITIES IN THE TABLES HEREON ARE BASED ON CONCRETE PIPE.
6. QUANTITIES SHOWN SHALL BE THE BASIS FOR FINAL PAYMENT UNLESS AUTHORIZED MODIFICATIONS ARE MADE.

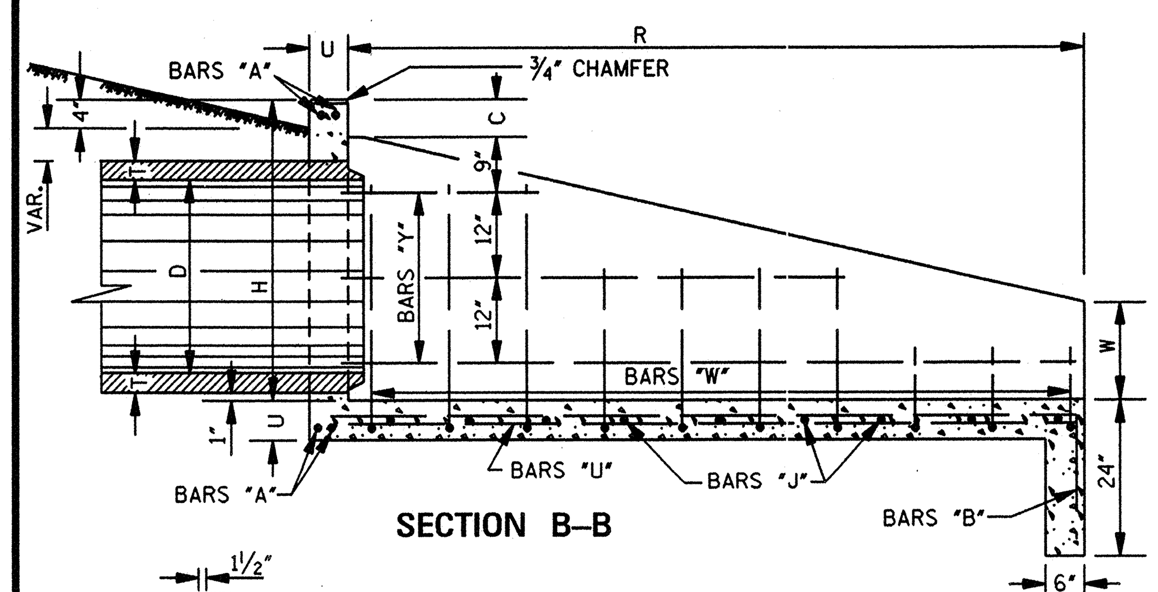

SECTION B–B

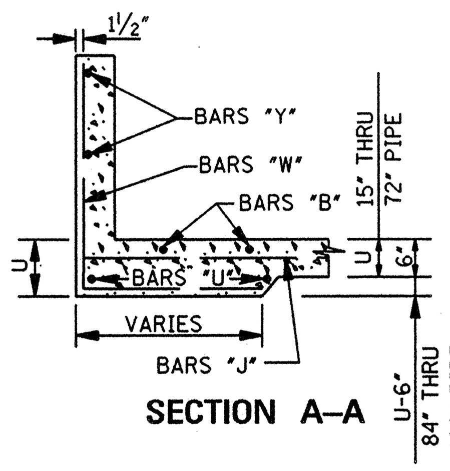

SECTION A–A

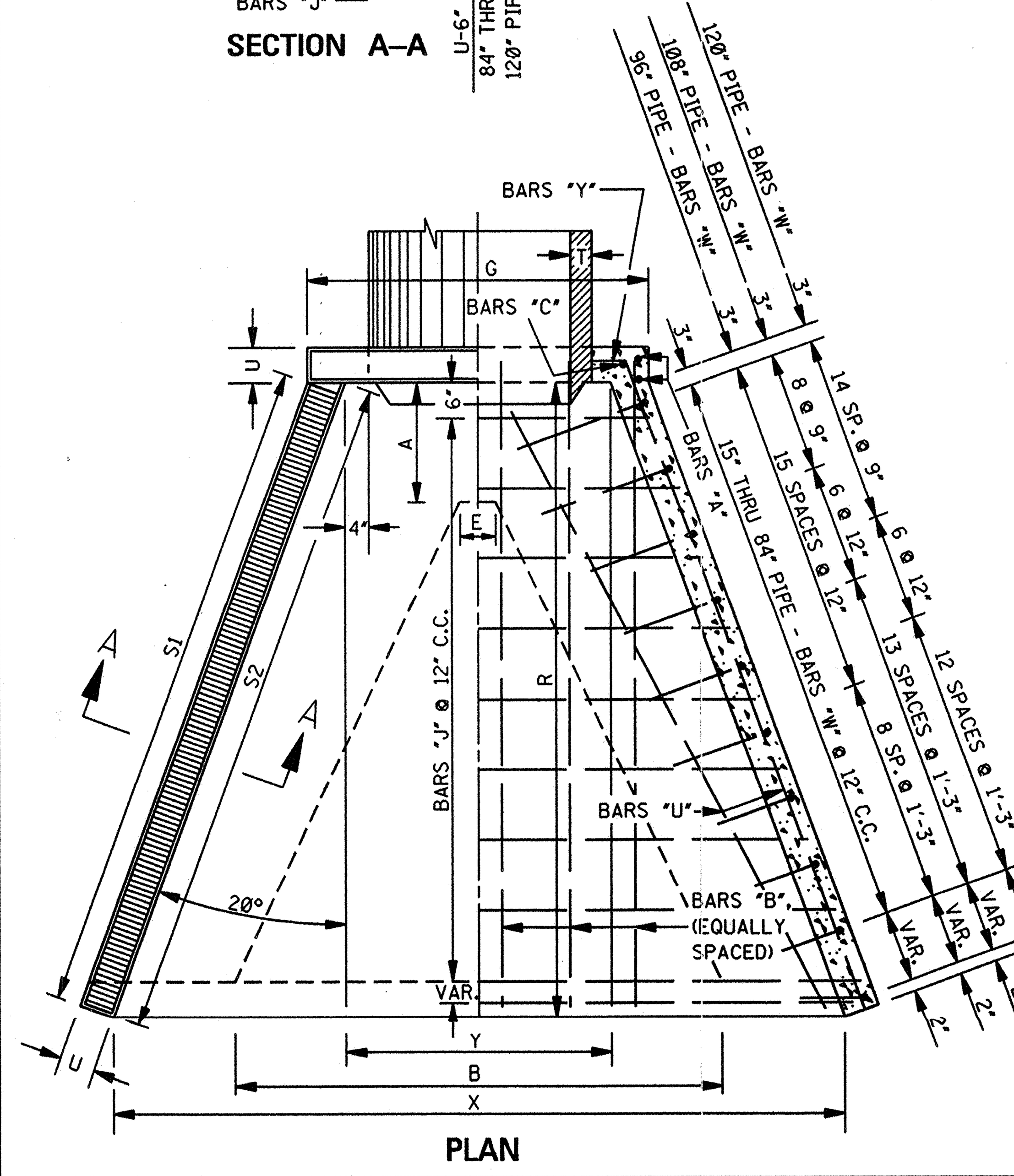

PLAN

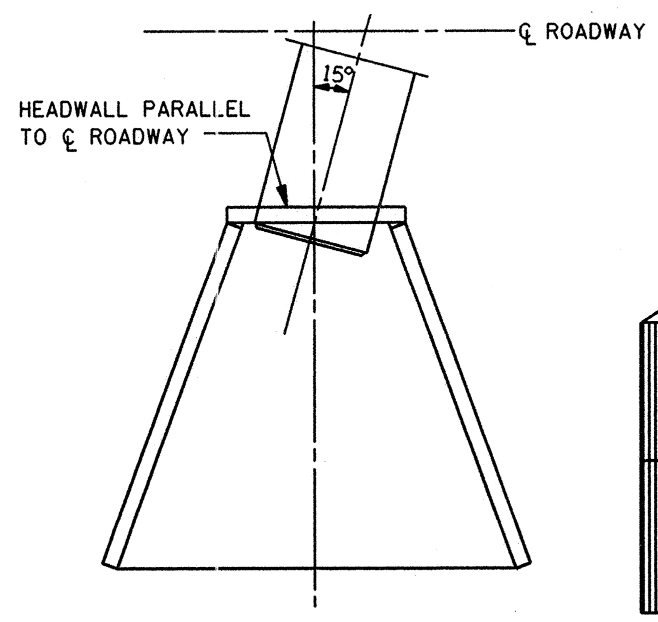

15° SKEW INSTALLATION PLAN

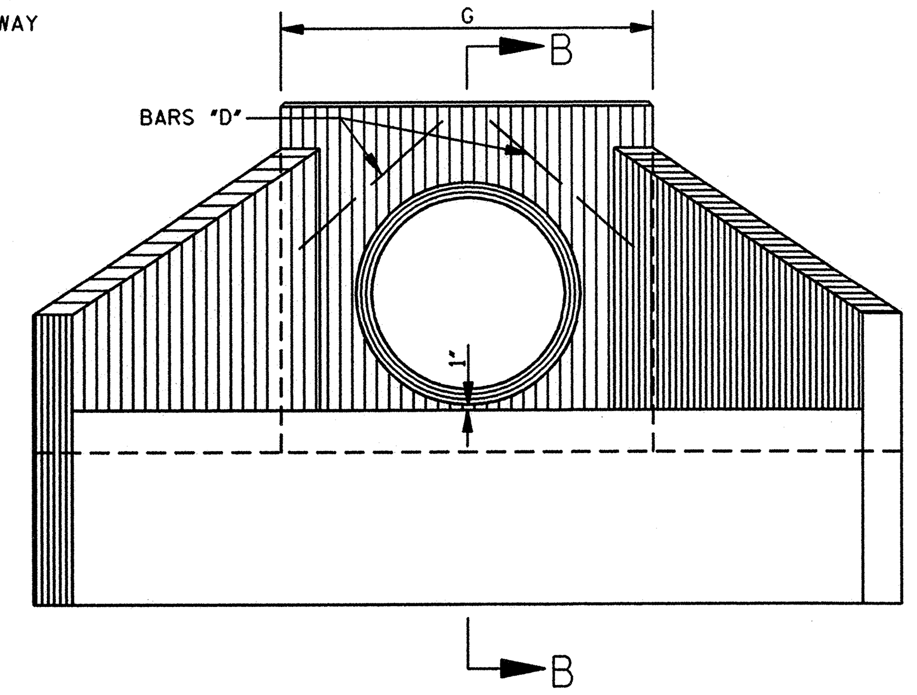

FRONT ELEVATION

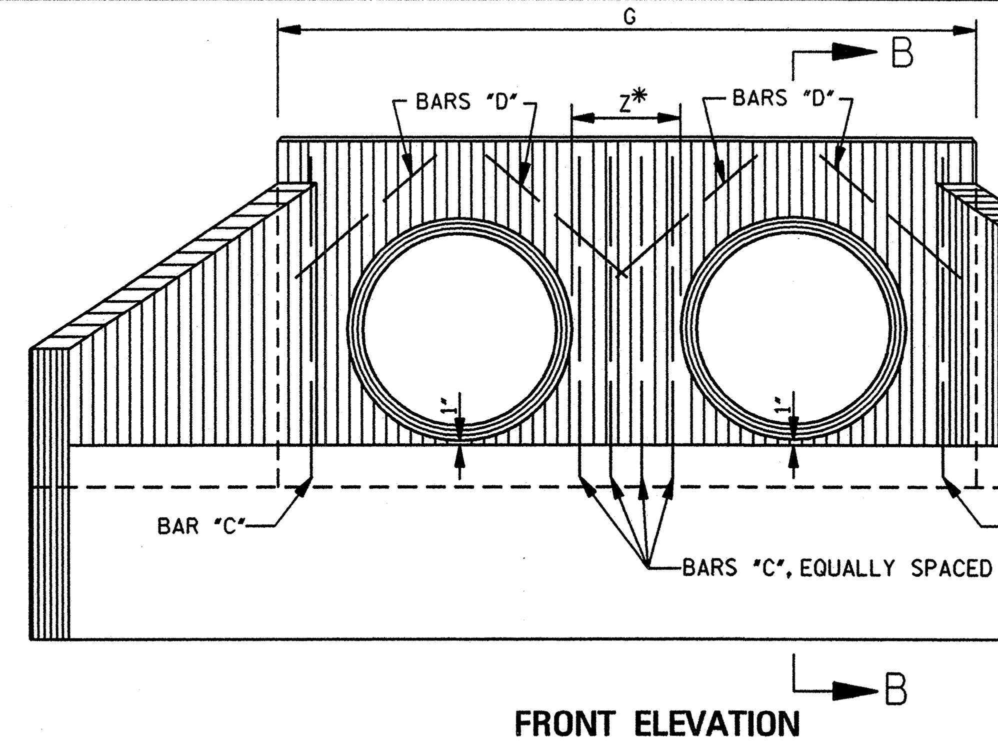

FRONT ELEVATION

*NOTE: MEASURE NORMAL (PERPENDICULAR) TO PIPE.

DIMENSIONS AND REINFORCING COMMON TO FLARED HEADWALLS FOR SINGLE, DOUBLE AND TRIPLE LINE PIPE CULVERTS

PIPE DIA	MIN THK "T"	C	H	R	S1	S2	U	W	U NO	U LGTH	W1 NO	W1 SIZE	W1 X	W1 X1	W1 LGTH	W2 NO	W2 SIZE	W2 X	W2 X1	W2 LGTH	W3 NO	W3 SIZE	W3 X	W3 X1	W3 LGTH	W4 NO	W4 SIZE	W4 X	W4 X1	W4 LGTH
15	2¼	7	2-5	5-2	5-3⅛	5-6	6	0-8	4	5-1	4	#4	1-1	1-8	2-9	6	#4	1-0	1-0	2-0	2	#4	1-0	0-10	1-10					
18	2½	7	2-9½	6-0	6-2½	6-4⅝	6	0-10	4	5-11	4	#4	1-3	2-0	3-3	2	#4	1-3	1-10	3-1	8	#4	1-1	1-0	2-1					
24	3	7	3-4½	7-8	7-11¾	8-1⅛	6	1-0	4	7-9	4	#4	1-8	2-7	4-3	8	#4	1-4	1-7	2-11	6	#4	1-0	1-0	2-0					
30	3½	7	3-11½	9-0	9-4¾	9-6⅞	6	1-3	4	9-2	4	#4	2-1	3-2	5-3	8	#4	1-7	2-2	3-9	8	#4	1-1	1-2	2-3					
36	4	7½	4-6½	10-6	11-0	11-2⅛	6	1-5	4	10-9	4	#5	2-5	3-9	6-2	8	#4	2-0	2-9	4-9	8	#4	1-5	1-9	3-2	4	#4	1-1	1-7	2-8
42	4½	7½	5-1½	11-10	12-5	12-7⅛	6	1-8	4	12-2	4	#5	2-11	4-4	7-3	8	#5	2-3	3-4	5-7	10	#4	1-7	2-4	4-1	4	#4	1-0	1-4	2-4
48	5	7½	5-8½	13-4	14-0⅛	14-2¼	6	1-10½	4	13-10	4	#5	3-1	4-10	7-11	8	#5	2-8	3-10	6-6	10	#4	2-0	2-10	4-10	8	#4	1-3	1-10	3-1
54	5½	8	6-3½	14-8	15-5⅛	15-7¼	6	2-1	4	15-3	4	#5	3-6	5-4	8-10	10	#5	3-0	4-4	7-4	8	#5	2-3	3-4	5-7	10	#4	1-8	2-4	4-0
60	6	8	6-10½	16-4	17-2½	17-4⅝	6	2-3	4	16-11	4	#5	3-10	5-11	9-9	10	#5	3-3	4-11	8-2	8	#5	2-6	3-11	6-5	10	#4	1-10	2-11	4-9
66	6½	8	7-7	18-4	19-3¾	19-6⅛	6½	2-6½	4	19-1	4	#6	4-3	6-8	10-11	10	#5	3-8	5-8	9-4	8	#5	3-2	4-8	7-10	8	#5	2-7	3-8	6-3
72	7	8	8-2	19-8	20-8⅝	20-11⅛	7	2-9	4	20-6	6	#6	4-9	7-5	12-2	8	#6	4-2	6-5	10-7	8	#5	3-6	5-5	8-11	10	#5	2-10	4-5	7-3
84	8	8	9-4	22-4	23-6⅜	23-9¼	8	3-2	4	23-3	6	#6	5-5	8-7	14-0	6	#6	5-2	7-7	12-9	10	#6	4-6	6-7	11-1	8	#5	3-9	5-7	9-4
96	9	8	10-5	25-0	26-4⅝	26-7¼	8	3-6	4	26-4	6	#7	5-7	9-6	15-1	8	#7	5-7	8-6	14-1	10	#6	5-0	7-6	12-6	8	#5	4-4	6-6	10-10
108	10	8	11-7	27-8	29-2⅛	29-8⅜	9	4-0	4	29-2	8	#7	6-5	10-9	17-2	10	#7	6-5	9-9	16-2	8	#7	5-10	8-9	14-7	8	#6	5-2	7-9	12-11

PIPE DIA	W5 NO	W5 SIZE	W5 X	W5 X1	W5 LGTH	W6 NO	W6 SIZE	W6 X	W6 X1	W6 LGTH	W7 NO	W7 SIZE	W7 X	W7 X1	W7 LGTH	W8 NO	W8 SIZE	W8 X	W8 X1	W8 LGTH	Y1 NO	Y1 LGTH	Y2 NO	Y2 LGTH	Y3 NO	Y3 LGTH	Y4 NO	Y4 LGTH	Y5 NO	Y5 LGTH	Y6 NO	Y6 LGTH	Y7 NO	Y7 LGTH	Y8 NO	Y8 LGTH
15																					2	3-5	2	6-2												
18																					2	3-5	2	7-0												
24																					2	3-5	2	7-8												
30																					2	3-5	2	7-5	2	10-2										
36																					2	3-5	2	7-9	4	11-10										
42																					2	3-5	2	7-5	2	12-4	2	13-3								
48																					2	3-5	2	7-8	2	11-8	4	14-10								
54																					2	3-5	2	7-8	2	12-3	4	16-3								
60	4	#4	1-4	2-0	3-4																2	3-5	2	7-8	2	11-8	2	16-5	4	18-1						
66	10	#4	1-10	2-8	4-6																2	3-5	2	7-8	2	12-4	2	16-5	6	20-3						
72	8	#4	2-0	3-5	5-5	4	#4	1-8	2-5	4-1											2	3-5	2	7-8	2	11-9	2	16-5	2	20-9	4	21-8				
84	8	#5	3-2	4-7	7-9	10	#5	2-6	3-7	6-1											2	3-5	2	7-8	2	11-7	2	16-5	2	20-9	6	24-6				
96	6	#5	3-8	5-6	9-2	6	#5	3-0	4-6	7-6	6	#5	2-2	3-10	6-0						2	3-6	2	7-6	2	12-6	2	16-6	2	20-3	2	25-3	6	27-4		
108	6	#5	4-6	6-9	11-3	8	#5	3-10	5-9	9-7	6	#5	3-2	4-9	7-11	4	#5	3-1	4-6	7-7	2	3-9	2	7-6	2	11-6	2	16-0	2	19-9	2	24-9	2	29-9	8	31-8

DIMENSIONS AND REINFORCING FOR FLARED HEADWALL FOR SINGLE LINE PIPE CULVERT

PIPE DIA	A	B	E	G	X	Y	Z	A NO	A LGTH	B NO	B LGTH	C NO	C LGTH	D NO	D LGTH	J1 NO	J1 LGTH	J2 NO	J2 LGTH	J3 NO	J3 LGTH	J4 NO	J4 LGTH	J5 NO	J5 LGTH	J6 NO	J6 LGTH	J7 NO	J7 LGTH	J8 NO	J8 LGTH	J9 NO	J9 LGTH	J10 NO	J10 LGTH	J11 NO	J11 LGTH	J12 NO	J12 LGTH
15	-	-	-	3-3¾	6-0⅛	2-3	-	4	6-8	4	6-10	2	2-8	2	1-10	1	3-1	1	3-10	1	4-7	1	5-4	1	6-1	1	6-5												
18	-	-	-	3-6¾	6-10⅜	2-6	-	4	7-3	5	7-8	2	3-0	2	2-0	1	3-4	1	4-1	1	4-10	1	5-7	1	6-4	1	7-0	1	7-3										
24	-	-	-	4-1¾	8-8	3-1	-	4	8-5	5	9-4	2	3-7	2	2-3	1	4-0	1	4-8	1	5-5	1	6-2	1	6-11	1	7-8	1	8-4	1	9-0								
30	-	-	-	4-9¼	10-3⅛	3-8½	-	4	9-8	6	10-8	2	4-2	2	2-6	1	4-7	1	5-4	1	6-1	1	6-10	1	7-6	1	8-3	1	9-0	1	9-9	1	10-5	1	10-8				
36	-	-	-	5-3¾	11-10¾	4-3	-	4	10-9	7	12-2	2	4-9	2	2-9	1	5-2	1	5-11	1	6-8	1	7-4	1	8-1	1	8-10	1	9-7	1	10-4	1	11-0	1	11-9	1	12-4		
42	-	-	-	5-10¾	13-5⅜	4-10	-	4	11-11	7	13-6	2	5-4	2	3-0	1	5-8	1	6-5	1	7-2	1	7-11	1	8-7	1	9-4	1	10-1	1	10-10	1	11-7	1	12-4	1	13-0	1	13-10
48	-	-	-	6-5¾	15-1½	5-5	-	4	13-1	8	15-0	2	5-11	2	3-3	1	6-4	1	7-0	1	7-9	1	8-6	1	9-3	1	9-11	1	10-8	1	11-5	1	12-1	1	12-10	1	13-7	1	14-4
54	-	-	-	7-1¾	16-9⅛	6-1	-	4	14-4	8	16-4	2	6-6	2	3-6	1	7-1	1	7-9	1	8-6	1	9-3	1	9-11	1	10-8	1	11-5	1	12-1	1	12-10	1	13-7	1	14-4	1	15-0
60	-	-	-	7-8¾	18-6⅝	6-8	-	4	15-6	9	18-0	2	7-1	2	3-9	1	7-7	1	8-4	1	9-1	1	9-9	1	10-6	1	11-3	1	12-0	1	12-8	1	13-5	1	14-2	1	14-11	1	15-7
66	-	-	-	8-4⅛	20-7⅛	7-3	-	4	16-11	9	20-0	2	7-10	2	4-3	1	8-3	1	8-11	1	9-8	1	10-5	1	11-2	1	11-10	1	12-7	1	13-4	1	14-1	1	14-9	1	15-6	1	16-3
72	-	-	-	9-0⅛	22-1¾	7-10	-	4	18-2	10	21-4	2	8-6	2	4-7	1	8-10	1	9-7	1	10-3	1	11-0	1	11-9	1	12-6	1	13-2	1	13-11	1	14-8	1	15-5	1	16-1	1	16-10
84	5-0	20-0	2-0	10-5	25-3⅛	9-0	-	4	20-8	11	24-0	2	9-8	2	5-3	1	10-1	1	10-10	1	11-7	1	12-3	1	13-0	1	13-9	1	14-6	1	15-3	1	15-11	1	16-8	1	17-5	1	18-2
96	5-8	22-4	2-0	11-7	28-4⅜	10-2	-	4	22-11	12	26-8	2	10-9	2	5-9	1	11-7	1	12-4	1	13-1	1	13-9	1	14-6	1	15-3	1	16-0	1	16-9	1	17-5	1	18-2	1	18-11	1	19-8
108	6-4	25-0	2-0	12-11⅛	31-5¾	11-4	-	4	25-5	14	29-4	2	12-0	2	6-4	1	12-11	1	13-8	1	14-5	1	15-2	1	15-10	1	16-7	1	17-4	1	18-1	1	18-9	1	19-6	1	20-3	1	21-0

PIPE DIA	J13 NO	J13 LGTH	J14 NO	J14 LGTH	J15 NO	J15 LGTH	J16 NO	J16 LGTH	J17 NO	J17 LGTH	J18 NO	J18 LGTH	J19 NO	J19 LGTH	J20 NO	J20 LGTH	J21 NO	J21 LGTH	J22 NO	J22 LGTH	J23 NO	J23 LGTH	J24 NO	J24 LGTH	J25 NO	J25 LGTH	J26 NO	J26 LGTH	J27 NO	J27 LGTH	J28 NO	J28 LGTH	PAY QTY 1-HEADWALL CONC CU YDS	PAY QTY 1-HEADWALL STEEL LBS
15																																	1.07	106
18																																	1.37	131
24																																	2.02	166
30																																	2.72	229
36																																	3.53	310
42																																	4.42	376
48	1	15-0	1	15-6																													5.47	473
54	1	15-9	1	16-6	1	17-2																											6.56	562
60	1	16-4	1	17-1	1	17-9	1	18-6	1	18-11																							7.91	682
66	1	17-0	1	17-9	1	18-5	1	19-2	1	19-11	1	20-8	1	21-0																			10.49	865
72	1	17-7	1	18-3	1	19-0	1	19-9	1	20-6	1	21-2	1	21-11	1	22-7																	12.95	1039
84	1	18-10	1	19-7	1	20-4	1	21-0	1	21-9	1	22-6	1	23-3	1	23-11	1	24-8	1	25-5	1	25-9											17.89	1384
96	1	20-4	1	21-1	1	21-10	1	22-6	1	23-3	1	24-0	1	24-9	1	25-5	1	26-2	1	26-11	1	27-8	1	28-4	1	28-11							22.20	1766
108	1	21-8	1	22-5	1	23-2	1	23-10	1	24-7	1	25-4	1	26-1	1	26-9	1	27-6	1	28-3	1	29-0	1	29-8	1	31-5	1	32-2	1	32-11	1	33-1	30.00	2430

DIMENSIONS AND REINFORCING FOR FLARED HEADWALL FOR DOUBLE LINE PIPE CULVERT

PIPE DIA	A	B	E	G	X	Y	Z	A NO	A LGTH	B NO	B LGTH	C NO	C LGTH	D NO	D LGTH	J1 NO	J1 LGTH	J2 NO	J2 LGTH	J3 NO	J3 LGTH	J4 NO	J4 LGTH	J5 NO	J5 LGTH	J6 NO	J6 LGTH	J7 NO	J7 LGTH	J8 NO	J8 LGTH	J9 NO	J9 LGTH	J10 NO	J10 LGTH	J11 NO	J11 LGTH	J12 NO	J12 LGTH
15	-	-	-	5-10¾	8-7⅛	4-10	1-0	4	9-3	7	6-10	3	2-8	4	1-10	1	5-8	1	6-5	1	7-2	1	7-11	1	8-8	1	9-0												
18	-	-	-	6-4¾	9-8⅜	5-4	1-0	4	10-1	8	7-8	3	3-0	4	2-0	1	6-2	1	6-11	1	7-8	1	8-5	1	9-2	1	9-10	1	10-1										
24	-	-	-	7-6¾	12-1	6-6	1-0	4	11-10	9	9-4	3	3-7	4	2-3	1	7-5	1	8-1	1	8-10	1	9-7	1	10-4	1	11-1	1	11-9	1	12-5								
30	-	-	-	9-0¾	14-6⅝	8-0	1-3	4	13-11	10	10-8	4	4-2	4	2-6	1	8-10	1	9-7	1	10-4	1	11-1	1	11-9	1	12-6	1	13-3	1	14-0	1	14-8	1	15-1				
36	-	-	-	10-4¾	16-11¾	9-4	1-6	4	15-10	12	12-2	4	4-9	4	2-9	1	10-3	1	11-0	1	11-9	1	12-5	1	13-2	1	13-11	1	14-8	1	15-5	1	16-1	1	16-10	1	17-5		
42	-	-	-	11-9¾	19-4⅜	10-9	1-9	4	17-10	13	13-6	4	5-4	4	3-0	1	11-7	1	12-4	1	13-1	1	13-9	1	14-6	1	15-3	1	16-0	1	16-9	1	17-6	1	18-3	1	18-11	1	19-9
48	-	-	-	13-2¾	21-10½	12-2	2-0	4	19-10	15	15-0	4	5-11	4	3-3	1	13-1	1	13-9	1	14-6	1	15-3	1	16-0	1	16-8	1	17-5	1	18-2	1	18-10	1	19-7	1	20-4	1	21-1
54	-	-	-	14-9¾	24-5⅛	13-9	2-3	4	22-0	16	16-4	5	6-6	4	3-6	1	14-9	1	15-5	1	16-2	1	16-11	1	17-7	1	18-4	1	19-1	1	19-9	1	20-6	1	21-3	1	22-0	1	22-8
60	-	-	-	16-2¾	27-0⅝	15-2	2-6	4	24-0	17	18-0	5	7-1	4	3-9	1	16-1	1	16-10	1	17-7	1	18-3	1	19-0	1	19-9	1	20-6	1	21-2	1	21-11	1	22-8	1	23-5	1	24-1
66	-	-	-	17-8⅞	29-11⅛	16-7	2-9	4	26-3	18	20-0	5	7-10	4	4-3	1	17-7	1	18-3	1	19-0	1	19-9	1	20-6	1	21-2	1	21-11	1	22-8	1	23-5	1	24-1	1	24-10	1	25-7
72	-	-	-	19-2⅞	32-3¾	18-0	3-0	4	28-4	20	21-4	5	8-6	4	4-7	1	19-0	1	19-9	1	20-5	1	21-2	1	21-11	1	22-8	1	23-4	1	24-1	1	24-10	1	25-7	1	26-3	1	27-0
84	3-0	31-10	13-10	22-3	37-1⅛	20-10	3-6	4	33-6	23	24-0	6	9-9	4	5-3	1	21-11	1	22-8	1	23-5	1	24-1	1	24-10	1	25-7	1	26-4	1	27-1	1	27-9	1	28-6	1	29-3	1	31-0
96	3-0	35-10	15-6	25-1	41-10⅜	23-8	4-0	4	37-5	26	26-9	7	10-9	4	5-9	1	25-1	1	25-10	1	26-7	1	27-3	1	28-0	1	28-9	1	29-6	1	31-3	1	31-11	1	32-8	1	33-5	1	34-2
108	3-0	40-2	17-2	28-1⅛	46-7¾	26-6	4-6	4	41-7	29	29-5	7	12-0	4	6-4	1	28-1	1	28-10	1	29-7	1	31-4	1	32-0	1	32-9	1	33-6	1	34-3	1	34-11	1	35-8	1	36-5	1	37-2

PIPE DIA	J13 NO	J13 LGTH	J14 NO	J14 LGTH	J15 NO	J15 LGTH	J16 NO	J16 LGTH	J17 NO	J17 LGTH	J18 NO	J18 LGTH	J19 NO	J19 LGTH	J20 NO	J20 LGTH	J21 NO	J21 LGTH	J22 NO	J22 LGTH	J23 NO	J23 LGTH	J24 NO	J24 LGTH	J25 NO	J25 LGTH	J26 NO	J26 LGTH	J27 NO	J27 LGTH	J28 NO	J28 LGTH	PAY QTY 1-HEADWALL CONC CU YDS	PAY QTY 1-HEADWALL STEEL LBS
15																																	1.46	141
18																																	1.84	172
24																																	2.68	224
30																																	3.64	306
36																																	4.76	412
42																																	5.99	505
48	1	21-9	1	22-3																													7.44	637
54	1	23-5	1	24-2	1	24-10																											8.97	765
60	1	24-10	1	25-7	1	26-3	1	27-0	1	27-5																							10.83	917
66	1	26-4	1	27-1	1	27-9	1	28-6	1	29-3	1	30-0	1	30-4																			14.44	1150
72	1	27-9	1	28-5	1	29-2	1	29-11	1	31-8	1	32-4	1	33-1	1	33-9																	17.96	1370
84	1	31-8	1	32-5	1	33-2	1	33-10	1	34-7	1	35-4	1	36-1	1	36-9	1	37-6	1	38-3	1	38-7											22.99	1833
96	1	34-10	1	35-7	1	36-4	1	37-0	1	37-9	1	38-6	1	39-3	1	39-11	1	40-8	1	41-5	1	42-2	1	42-10	1	43-7							30.83	2337
108	1	37-10	1	38-7	1	39-4	1	40-0	1	40-9	1	41-6	1	42-3	1	42-11	1	43-8	1	44-5	1	45-2	1	45-10	1	46-7	1	47-4	1	48-0	1	48-9	40.94	3115

DIMENSIONS AND REINFORCING FOR FLARED HEADWALL FOR TRIPLE LINE PIPE CULVERT

PIPE DIA	A	B	E	G	X	Y	Z	A NO	A LGTH	B NO	B LGTH	C NO	C LGTH	D NO	D LGTH	J1 NO	J1 LGTH	J2 NO	J2 LGTH	J3 NO	J3 LGTH	J4 NO	J4 LGTH	J5 NO	J5 LGTH	J6 NO	J6 LGTH	J7 NO	J7 LGTH	J8 NO	J8 LGTH	J9 NO	J9 LGTH	J10 NO	J10 LGTH	J11 NO	J11 LGTH	J12 NO	J12 LGTH
15	-	-	-	8-5¾	11-2⅛	7-5	1-0	4	11-10	10	6-10	4	2-8	6	1-10	1	8-3	1	9-0	1	9-9	1	10-6	1	11-3	1	11-7												
18	-	-	-	9-2¾	12-6⅜	8-2	1-0	4	12-11	11	7-8	4	3-0	6	2-0	1	9-0	1	9-9	1	10-6	1	11-3	1	12-0	1	12-8	1	12-11										
24	-	-	-	10-11¾	15-6	9-11	1-0	4	15-3	13	9-4	4	3-7	6	2-3	1	10-10	1	11-6	1	12-3	1	13-0	1	13-9	1	14-6	1	15-2	1	15-10								
30	-	-	-	13-4¼	18-10⅛	12-3½	1-3	4	18-3	14	10-8	6	4-2	6	2-6	1	13-1	1	13-10	1	14-7	1	15-4	1	16-0	1	16-9	1	17-6	1	18-3	1	18-11	1	19-4				
36	-	-	-	15-5¾	22-0¾	14-5	1-6	4	20-11	17	12-2	6	4-9	6	2-9	1	15-4	1	16-1	1	16-10	1	17-6	1	18-3	1	19-0	1	19-9	1	20-6	1	21-2	1	21-11	1	22-6		
42	-	-	-	17-8¾	25-3⅜	16-8	1-9	4	23-9	19	13-6	6	5-4	6	3-0	1	17-6	1	18-3	1	19-0	1	19-8	1	20-5	1	21-2	1	21-11	1	22-8	1	23-5	1	24-2	1	24-10	1	25-8
48	-	-	-	19-11¾	28-7½	18-11	2-0	4	26-7	22	15-0	6	5-11	6	3-3	1	19-10	1	20-6	1	21-3	1	22-0	1	22-9	1	23-5	1	24-2	1	24-11	1	25-7	1	26-4	1	27-1	1	27-10
54	-	-	-	22-5¾	32-1⅛	21-5	2-3	4	29-8	24	16-4	8	6-6	6	3-6	1	22-5	1	23-1	1	23-10	1	24-7	1	25-3	1	26-0	1	26-9	1	27-5	1	28-2	1	28-11	1	29-8	1	31-4
60	-	-	-	24-8¾	35-6⅝	23-8	2-6	4	33-6	25	18-0	8	7-1	6	3-9	1	24-7	1	25-4	1	26-1	1	26-9	1	27-6	1	28-3	1	29-0	1	29-8	1	31-5	1	32-2	1	32-11	1	33-7
66	-	-	-	27-0⅞	39-3⅛	25-11	2-9	4	36-7	27	20-0	8	7-10	6	4-3	1	26-11	1	27-7	1	28-4	1	29-1	1	29-10	1	31-6	1	32-3	1	33-0	1	33-9	1	34-5	1	35-2	1	35-11
72	-	-	-	29-4⅞	42-5¾	28-2	3-0	4	39-6	30	21-4	8	8-6	6	4-7	1	29-2	1	29-11	1	31-7	1	32-4	1	33-1	1	33-10	1	34-6	1	35-3	1	36-0	1	36-9	1	37-5	1	38-2
84	3-0	43-8	25-8	34-1	48-11⅛	32-8	3-6	4	45-4	35	24-0	10	9-9	6	5-3	1	34-9	1	35-6	1	36-3	1	36-11	1	37-8	1	38-5	1	39-2	1	39-11	1	40-7	1	41-4	1	42-1	1	42-10
96	3-0	49-4	29-0	38-7	55-4⅜	37-2	4-0	4	50-11	39	26-9	12	10-9	6	5-9	1	39-7	1	40-4	1	41-1	1	41-9	1	42-6	1	43-3	1	44-0	1	44-9	1	45-5	1	46-2	1	46-11	1	47-8
108	3-0	55-4	32-4	43-3⅛	61-9¾	41-8	4-6	4	56-9	44	29-5	12	12-0	6	6-4	1	44-3	1	45-0	1	45-9	1	46-6	1	47-2	1	47-11	1	48-8	1	49-5	1	50-1	1	50-10	1	51-7	1	52-4

PIPE DIA	J13 NO	J13 LGTH	J14 NO	J14 LGTH	J15 NO	J15 LGTH	J16 NO	J16 LGTH	J17 NO	J17 LGTH	J18 NO	J18 LGTH	J19 NO	J19 LGTH	J20 NO	J20 LGTH	J21 NO	J21 LGTH	J22 NO	J22 LGTH	J23 NO	J23 LGTH	J24 NO	J24 LGTH	J25 NO	J25 LGTH	J26 NO	J26 LGTH	J27 NO	J27 LGTH	J28 NO	J28 LGTH	PAY QTY 1-HEADWALL CONC CU YDS	PAY QTY 1-HEADWALL STEEL LBS
15																																	1.85	176
18																																	2.31	213
24																																	3.34	282
30																																	4.56	384
36																																	5.99	514
42																																	7.56	633
48	1	28-6	1	29-0																													9.41	800
54	1	32-1	1	32-10	1	33-6																											11.38	970
60	1	34-4	1	35-1	1	35-9	1	36-6	1	36-11																							13.75	1160
66	1	36-8	1	37-5	1	38-1	1	38-10	1	39-7	1	40-4	1	40-8																			18.39	1447
72	1	38-11	1	39-7	1	40-4	1	41-1	1	41-10	1	42-6	1	43-3	1	43-11																	22.97	1711
84	1	43-6	1	44-3	1	45-0	1	45-8	1	46-5	1	47-2	1	47-11	1	48-7	1	49-4	1	50-1	1	50-5											26.72	2280
96	1	48-4	1	49-1	1	49-10	1	50-6	1	51-3	1	52-0	1	52-9	1	53-5	1	54-2	1	54-11	1	55-8	1	56-4	1	57-1							39.66	2879
108	1	53-0	1	53-9	1	54-6	1	55-2	1	55-11	1	56-8	1	57-5	1	58-1	1	58-10	1	59-7	1	61-4	1	62-0	1	62-9	1	63-6	1	64-2	1	64-11	52.28	3788

BY	REVISION	DATE

MISSISSIPPI DEPARTMENT OF TRANSPORTATION
ROADWAY DESIGN DIVISION
STANDARD PLAN

HEADWALLS FOR CONCRETE PIPE 4:1 SLOPE – 0°– 15°SKEW

WORKING NUMBER HW-4100

ISSUE DATE: OCTOBER 1, 1998

SHEET NUMBER 346