STATE	PROJECT NO.
MISS.	

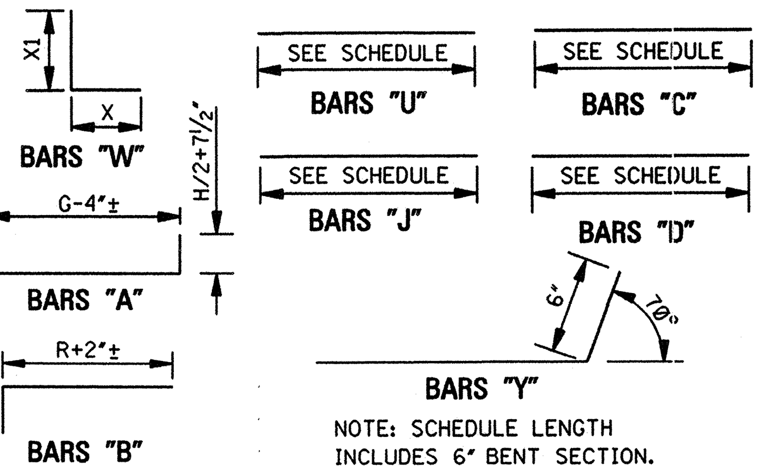

BAR BENDING DETAILS

NOTE: WHENEVER THE COMPUTED LENGTH OF BAR EXCEEDS 30', THE SCHEDULED LENGTH INCLUDES A 12" LAP. ALL BARS ARE #4 EXCEPT BARS "W". SEE SCHEDULE FOR SIZE OF BARS "W".

DIMENSIONS AND REINFORCING COMMON TO FLARED HEADWALLS FOR SINGLE, DOUBLE AND TRIPLE LINE PIPE CULVERTS

PIPE DIA	MIN THK "T"	C	H	R	S1	S2	U	W	U NO	U LGTH	W1 NO	W1 SIZE	W1 X	W1 X1	W1 LGTH	W2 NO	W2 SIZE	W2 X	W2 X1	W2 LGTH
15	2¼	7	2-5	3-10½	3-11⅜	4-1½	6	0-8	4	3-10	4	#4	1-1	1-8	2-9	6	#4	1-0	0-10	1-10
18	2½	7	2-9½	4-6	4-7⅜	4-9½	6	0-10	4	4-5	4	#4	1-3	2-0	3-3	8	#4	1-0	1-0	2-0
24	3	7	3-4½	5-9	5-11¼	6-1⅜	6	1-0	4	5-9	4	#4	1-8	2-7	4-3	6	#4	1-4	1-7	2-11
30	3½	7	3-11½	6-9	7-0⅛	7-2¼	6	1-3	4	6-9	4	#4	2-1	3-2	5-3	6	#4	1-7	2-2	3-9
36	4	7½	4-6½	7-10½	8-2½	8-4⅝	6	1-5	4	8-1	4	#5	2-5	3-9	6-2	6	#4	2-0	2-9	4-9
42	4½	7½	5-1½	8-10½	9-3¼	9-5⅜	6	1-8	4	9-2	4	#5	2-11	4-4	7-3	6	#4	2-3	3-4	5-7
48	5	7½	5-8½	10-0	10-5⅝	10-7¾	6	1-10½	4	10-5	4	#5	3-1	4-10	7-11	6	#5	2-8	3-10	6-6
54	5½	8	6-3½	11-0	11-6⅜	11-8½	6	2-1	4	11-5	4	#5	3-6	5-4	8-10	6	#5	3-0	4-4	7-4
60	6	8	6-10½	12-3	12-10¼	13-0⅜	6	2-3	4	12-10	4	#5	3-10	5-11	9-9	6	#5	3-3	4-11	8-2
66	6½	8	7-7	13-9	14-5¼	14-7⅝	6½	2-6½	4	14-3	4	#6	4-3	6-8	10-11	6	#5	3-8	5-8	9-4
72	7	8	8-2	14-9	15-5⅞	15-8⅜	7	2-9	4	15-4	4	#6	4-9	7-5	12-2	6	#6	4-2	6-5	10-7
84	8	8	9-4	16-9	17-7	17-9⅞	8	3-2	4	17-7	2	#6	5-5	8-7	14-0	6	#6	5-2	7-7	12-9
96	9	8	10-5	19-3	20-3	20-5⅞	8	3-6	4	20-3	4	#7	5-7	9-6	15-1	6	#7	5-7	8-6	14-1
108	10	8	11-7	21-4	22-5¼	22-8½	9	4-0	4	22-5	6	#7	6-5	10-9	17-2	8	#7	6-5	9-9	16-2

PIPE DIA	W3 NO	W3 SIZE	W3 X	W3 X1	W3 LGTH	W4 NO	W4 SIZE	W4 X	W4 X1	W4 LGTH	W5 NO	W5 SIZE	W5 X	W5 X1	W5 LGTH
15															
18															
24	2	#4	1-0	1-2	2-2										
30	6	#4	1-1	1-5	2-6										
36	8	#4	1-5	1-9	3-2										
42	8	#4	1-7	2-4	3-11	4	#4	1-3	1-8	2-11					
48	8	#4	2-0	2-10	4-10	4	#4	1-3	1-10	3-1					
54	8	#4	2-3	3-4	5-7	8	#4	1-8	2-4	4-0					
60	8	#5	2-6	3-11	6-5	6	#4	1-10	2-11	4-9	4	#4	1-4	1-11	3-3
66	8	#5	3-2	4-8	7-10	6	#5	2-7	3-8	6-3	6	#4	1-10	2-8	4-6
72	8	#5	3-6	5-5	8-11	6	#5	2-10	4-5	7-3	6	#4	2-0	3-5	5-5
84	8	#6	4-6	6-7	11-1	6	#5	3-9	5-7	9-4	6	#5	3-2	4-7	7-9
96	8	#6	5-0	7-6	12-6	6	#6	4-4	6-6	10-10	4	#5	3-8	5-6	9-2
108	6	#7	5-10	8-9	14-7	6	#7	5-2	7-9	12-11	6	#6	4-6	6-9	11-3

PIPE DIA	W6 NO	W6 SIZE	W6 X	W6 X1	W6 LGTH	W7 NO	W7 SIZE	W7 X	W7 X1	W7 LGTH	W8 NO	W8 SIZE	W8 X	W8 X1	W8 LGTH
15															
18															
24															
30															
36															
42															
48															
54															
60															
66															
72	2	#4	2-0	3-0	5-0										
84	8	#5	2-6	3-7	6-1										
96	6	#5	3-0	4-6	7-6	4	#5	2-2	3-10	6-0					
108	6	#5	3-10	5-9	9-7	4	#5	3-2	4-9	7-11	2	#5	3-1	4-6	7-7

PIPE DIA	Y1 NO	Y1 LGTH	Y2 NO	Y2 LGTH	Y3 NO	Y3 LGTH	Y4 NO	Y4 LGTH	Y5 NO	Y5 LGTH	Y6 NO	Y6 LGTH	Y7 NO	Y7 LGTH	Y8 NO	Y8 LGTH
15	2	2-8	2	5-0												
18	2	2-8	2	5-8												
24	2	2-8	2	7-0												
30	2	2-8	2	6-3	2	8-1										
36	2	2-8	2	5-9	2	9-3										
42	2	2-8	2	5-9	2	9-9	2	10-4								
48	2	2-8	2	5-9	2	9-9	4	11-7								
54	2	2-8	2	5-9	2	9-9	4	12-7								
60	2	2-8	2	5-9	2	9-9	2	12-9	4	14-1						
66	2	2-9	2	5-9	2	9-9	2	12-9	6	15-8						
72	2	2-9	2	5-9	2	9-9	2	12-9	2	15-9	4	16-8				
84	2	2-9	2	6-0	2	9-1	2	12-5	2	15-7	6	18-5				
96	2	2-6	2	5-6	2	9-6	2	12-6	2	15-0	2	18-9	6	21-2		
108	2	3-0	2	6-0	2	9-0	2	12-0	2	15-9	2	19-6	2	22-0	8	23-4

DIMENSIONS AND REINFORCING FOR FLARED HEADWALL FOR SINGLE LINE PIPE CULVERT

PIPE DIA	A	B	E	G	X	Y	Z	A NO	A LGTH	B NO	B LGTH	C NO	C LGTH	D NO	D LGTH	J1 NO	J1 LGTH	J2 NO	J2 LGTH	J3 NO	J3 LGTH	J4 NO	J4 LGTH	J5 NO	J5 LGTH	J6 NO	J6 LGTH	J7 NO	J7 LGTH	J8 NO	J8 LGTH	J9 NO	J9 LGTH	J10 NO	J10 LGTH	J11 NO	J11 LGTH
15	-	-	-	3-3¾	5-0⅞	2-3	-	4	6-8	4	5-6	2	2-8	2	1-10	1	3-2	1	3-10	1	4-7	1	5-4	1	5-5												
18	-	-	-	3-6¾	5-9¼	2-6	-	4	7-3	5	6-2	2	3-0	2	2-0	1	3-5	1	4-2	1	4-10	1	5-7	1	6-2												
24	-	-	-	4-1¾	7-3¼	3-1	-	4	8-5	5	7-5	2	3-7	2	2-3	1	3-11	1	4-8	1	5-4	1	6-1	1	6-10	1	7-7										
30	-	-	-	4-9¼	8-7½	3-8½	-	4	9-8	6	8-5	2	4-2	2	2-6	1	4-9	1	5-5	1	6-2	1	6-10	1	7-7	1	8-3	1	9-0								
36	-	-	-	5-3¾	9-11¾	4-3	-	4	10-9	7	9-6	2	4-9	2	2-9	1	5-2	1	5-11	1	6-8	1	7-4	1	8-1	1	8-10	1	9-6	1	10-3	1	10-4				
42	-	-	-	5-10¾	11-3½	4-10	-	4	11-11	7	10-6	2	5-4	2	3-0	1	5-9	1	6-6	1	7-2	1	7-11	1	8-8	1	9-4	1	10-1	1	10-10	1	11-7	1	11-8		
48	-	-	-	6-5¾	12-8¼	5-5	-	4	13-1	8	11-8	2	5-11	2	3-3	1	6-4	1	7-0	1	7-9	1	8-6	1	9-3	1	9-11	1	10-8	1	11-5	1	12-2	1	12-10	1	13-0
54	-	-	-	7-1¾	14-1⅛	6-1	-	4	14-4	8	12-8	2	6-6	2	3-6	1	7-0	1	7-8	1	8-5	1	9-2	1	9-11	1	10-7	1	11-4	1	12-1	1	12-10	1	13-6	1	14-3
60	-	-	-	7-8¾	15-7	6-8	-	4	15-6	9	13-11	2	7-1	2	3-9	1	7-6	1	8-3	1	9-0	1	9-9	1	10-6	1	11-2	1	11-11	1	12-8	1	13-5	1	14-2	1	14-10
66	-	-	-	8-4⅛	17-3⅛	7-3	-	4	16-11	9	15-5	2	7-10	2	4-3	1	8-3	1	8-11	1	9-8	1	10-4	1	11-1	1	11-10	1	12-7	1	13-4	1	14-1	1	14-9	1	15-6
72	-	-	-	9-0⅞	18-6⅞	7-10	-	4	18-2	10	16-5	2	8-6	2	4-7	1	8-9	1	9-6	1	10-3	1	11-0	1	11-9	1	12-6	1	13-3	1	13-11	1	14-8	1	15-5	1	16-2
84	3-6	15-9	2-0	10-5	21-2⅜	9-0	-	4	20-8	11	18-5	2	9-8	2	5-3	1	10-2	1	10-10	1	11-7	1	12-4	1	13-0	1	13-9	1	14-5	1	15-2	1	15-11	1	16-7	1	17-4
96	4-0	18-0	2-0	11-7	24-2⅛	10-2	-	4	22-11	12	20-11	2	10-9	2	5-9	1	11-7	1	12-4	1	13-1	1	13-9	1	14-6	1	15-3	1	16-0	1	16-8	1	17-5	1	18-2	1	18-10
108	4-6	20-3	2-0	12-11⅛	26-10⅜	11-4	-	4	25-5	14	23-0	2	12-0	2	6-4	1	12-11	1	13-8	1	14-4	1	15-1	1	15-10	1	16-7	1	17-3	1	18-0	1	18-9	1	19-5	1	20-2

PIPE DIA	J12 NO	J12 LGTH	J13 NO	J13 LGTH	J14 NO	J14 LGTH	J15 NO	J15 LGTH	J16 NO	J16 LGTH	J17 NO	J17 LGTH	J18 NO	J18 LGTH	J19 NO	J19 LGTH	J20 NO	J20 LGTH	J21 NO	J21 LGTH	J22 NO	J22 LGTH	PAY QTY 1-HEADWALL CONC CU YDS	PAY QTY 1-HEADWALL STEEL LBS
15																							0.83	88
18																							1.04	105
24																							1.52	131
30																							2.03	180
36																							2.62	236
42																							3.26	295
48																							4.02	375
54	1	14-5																					4.81	430
60	1	15-7	1	16-0																			5.78	530
66	1	16-3	1	16-11	1	17-8																	7.63	662
72	1	16-11	1	17-7	1	18-4	1	19-1															9.41	778
84	1	18-1	1	18-10	1	19-7	1	20-4	1	21-0	1	21-9											13.06	1009
96	1	19-7	1	20-4	1	21-1	1	21-10	1	22-6	1	23-3	1	24-0	1	24-8	1	25-2					16.67	1377
108	1	20-11	1	21-8	1	22-4	1	23-1	1	23-10	1	24-7	1	25-3	1	26-0	1	26-9	1	27-5	1	28-0	22.75	1940

GENERAL NOTES:

1. SPECIFICATIONS: MISSISSIPPI DEPARTMENT OF TRANSPORTATION, LATEST EDITION.
2. ALL CONCRETE SHALL BE CLASS "B".
3. ALL EXPOSED EDGES SHALL BE CHAMFERED ¾".
4. EXPOSED CONCRETE SURFACES SHALL BE FINISHED IN ACCORDANCE WITH THE APPLICABLE SECTION OF THE MDOT SPECIFICATIONS.
5. ALL LENGTHS AND QUANTITIES IN THE TABLES HEREON ARE BASED ON CONCRETE PIPE.
6. QUANTITIES SHOWN SHALL BE THE BASIS FOR FINAL PAYMENT UNLESS AUTHORIZED MODIFICATIONS ARE MADE.

DIMENSIONS AND REINFORCING FOR FLARED HEADWALL FOR DOUBLE LINE PIPE CULVERT

PIPE DIA	A	B	E	G	X	Y	Z	A NO	A LGTH	B NO	B LGTH	C NO	C LGTH	D NO	D LGTH	J1 NO	J1 LGTH	J2 NO	J2 LGTH	J3 NO	J3 LGTH	J4 NO	J4 LGTH	J5 NO	J5 LGTH	J6 NO	J6 LGTH	J7 NO	J7 LGTH	J8 NO	J8 LGTH	J9 NO	J9 LGTH	J10 NO	J10 LGTH	J11 NO	J11 LGTH
15	-	-	-	5-10¾	7-7⅞	4-10	1-0	4	9-3	7	5-6	3	2-8	4	1-10	1	5-9	1	6-5	1	7-2	1	7-11	1	8-0												
18	-	-	-	6-4¾	8-7¼	5-4	1-0	4	10-1	8	6-2	3	3-0	4	2-0	1	6-3	1	7-0	1	7-8	1	8-5	1	9-0												
24	-	-	-	7-6¾	10-8¼	6-6	1-0	4	11-10	9	7-5	3	3-7	4	2-3	1	7-4	1	8-1	1	8-9	1	9-6	1	10-3	1	11-0										
30	-	-	-	9-0¾	12-11	8-0	1-3	4	13-11	10	8-5	4	4-2	4	2-6	1	9-0	1	9-8	1	10-5	1	11-1	1	11-10	1	12-6	1	13-3								
36	-	-	-	10-4¾	15-0¾	9-4	1-6	4	15-10	12	9-6	4	4-9	4	2-9	1	10-3	1	11-0	1	11-9	1	12-5	1	13-2	1	13-11	1	14-7	1	15-4	1	15-5				
42	-	-	-	11-9¾	17-2½	10-9	1-9	4	17-10	13	10-6	4	5-4	4	3-0	1	11-8	1	12-5	1	13-1	1	13-10	1	14-7	1	15-3	1	16-0	1	16-9	1	17-6	1	17-7		
48	-	-	-	13-2¾	19-5¼	12-2	2-0	4	19-10	15	11-8	4	5-11	4	3-3	1	13-1	1	13-9	1	14-6	1	15-3	1	16-0	1	16-8	1	17-5	1	18-2	1	18-11	1	19-7	1	19-9
54	-	-	-	14-9¾	21-9⅛	13-9	2-3	4	22-0	16	12-8	5	6-6	4	3-6	1	14-8	1	15-4	1	16-1	1	16-10	1	17-7	1	18-3	1	19-0	1	19-9	1	20-6	1	21-2	1	21-11
60	-	-	-	16-2¾	24-1	15-2	2-6	4	24-0	17	13-11	5	7-1	4	3-9	1	16-0	1	16-9	1	17-6	1	18-3	1	19-0	1	19-8	1	20-5	1	21-2	1	21-11	1	22-8	1	23-4
66	-	-	-	17-8⅞	26-7⅛	16-7	2-9	4	26-3	18	15-5	5	7-10	4	4-3	1	17-7	1	18-3	1	19-0	1	19-8	1	20-5	1	21-2	1	21-11	1	22-8	1	23-5	1	24-2	1	24-10
72	-	-	-	19-2⅞	28-8⅞	18-0	3-0	4	28-4	20	16-5	5	8-6	4	4-7	1	18-11	1	19-8	1	20-5	1	21-2	1	21-11	1	22-8	1	23-5	1	24-1	1	24-10	1	25-7	1	26-4
84	3-0	27-7	13-10	22-3	33-0⅜	20-10	3-6	4	33-6	23	18-5	6	9-8	4	5-3	1	22-0	1	22-8	1	23-5	1	24-2	1	24-10	1	25-7	1	26-3	1	27-0	1	27-9	1	28-5	1	29-2
96	3-0	31-6	15-6	25-1	37-8⅛	23-8	4-0	4	37-5	26	20-11	7	10-9	4	5-9	1	25-1	1	25-10	1	26-6	1	27-3	1	28-0	1	28-9	1	29-5	1	31-2	1	31-11	1	32-7	1	33-4
108	3-0	35-5	17-2	28-1⅛	42-0⅜	26-6	4-6	4	41-7	29	23-0	7	12-0	4	6-4	1	28-1	1	28-10	1	29-6	1	31-3	1	32-0	1	32-9	1	33-5	1	34-2	1	34-11	1	35-7	1	36-4

PIPE DIA	J12 NO	J12 LGTH	J13 NO	J13 LGTH	J14 NO	J14 LGTH	J15 NO	J15 LGTH	J16 NO	J16 LGTH	J17 NO	J17 LGTH	J18 NO	J18 LGTH	J19 NO	J19 LGTH	J20 NO	J20 LGTH	J21 NO	J21 LGTH	J22 NO	J22 LGTH	PAY QTY 1-HEADWALL CONC CU YDS	PAY QTY 1-HEADWALL STEEL LBS
15																							1.15	119
18																							1.43	139
24																							2.05	179
30																							2.77	243
36																							3.60	322
42																							4.51	403
48																							5.58	509
54	1	22-1																					6.70	597
60	1	24-1	1	24-6																			8.06	718
66	1	25-7	1	26-3	1	27-0																	10.72	889
72	1	27-1	1	27-9	1	28-6	1	29-3															13.34	1040
84	1	29-11	1	31-8	1	32-5	1	33-2	1	33-10	1	34-7											18.19	1361
96	1	34-1	1	34-10	1	35-6	1	36-3	1	37-0	1	37-9	1	38-5	1	39-2	1	39-10					24.00	1844
108	1	37-1	1	37-10	1	38-6	1	39-3	1	40-0	1	40-9	1	41-5	1	42-2	1	42-10	1	43-8	1	44-2	32.44	2498

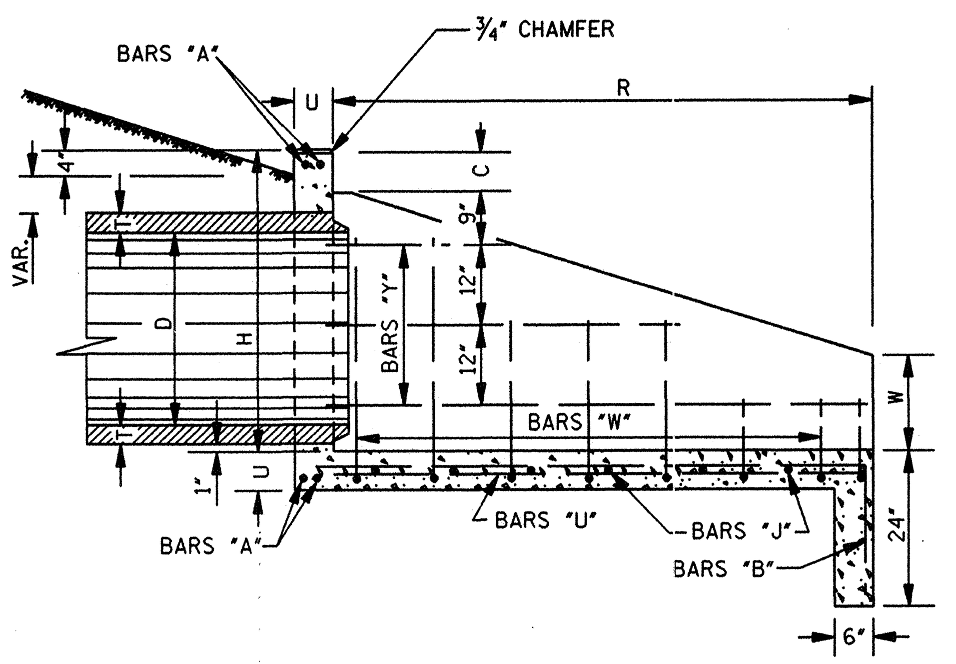

SECTION B–B

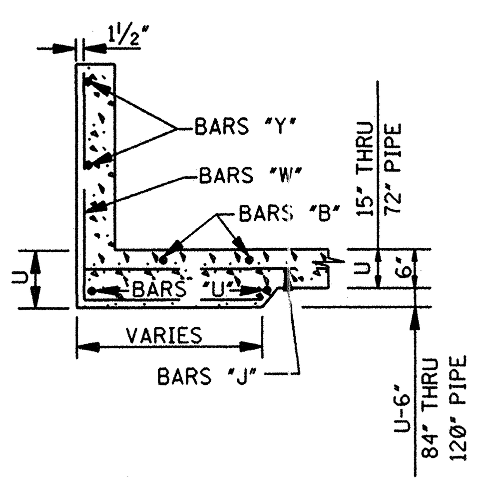

SECTION A–A

DIMENSIONS AND REINFORCING FOR FLARED HEADWALL FOR TRIPLE LINE PIPE CULVERT

PIPE DIA	A	B	E	G	X	Y	Z	A NO	A LGTH	B NO	B LGTH	C NO	C LGTH	D NO	D LGTH	J1 NO	J1 LGTH	J2 NO	J2 LGTH	J3 NO	J3 LGTH	J4 NO	J4 LGTH	J5 NO	J5 LGTH	J6 NO	J6 LGTH	J7 NO	J7 LGTH	J8 NO	J8 LGTH	J9 NO	J9 LGTH	J10 NO	J10 LGTH	J11 NO	J11 LGTH
15	-	-	-	8-5¾	10-2⅞	7-5	1-0	4	11-10	10	5-6	4	2-8	6	1-10	1	8-4	1	9-0	1	9-9	1	10-6	1	10-7												
18	-	-	-	9-2¾	11-5¼	8-2	1-0	4	12-11	11	6-2	4	3-0	6	2-0	1	9-1	1	9-10	1	10-6	1	11-3	1	11-10												
24	-	-	-	10-11¾	14-1¼	9-11	1-0	4	15-3	13	7-5	4	3-7	6	2-3	1	10-9	1	11-6	1	12-2	1	12-11	1	13-8	1	14-5										
30	-	-	-	13-4¼	17-2½	12-3½	1-3	4	18-3	14	8-5	6	4-2	6	2-6	1	13-3	1	13-11	1	14-8	1	15-4	1	16-1	1	16-9	1	17-6								
36	-	-	-	15-5¾	20-1¾	14-5	1-6	4	20-11	17	9-6	6	4-9	6	2-9	1	15-4	1	16-1	1	16-10	1	17-6	1	18-3	1	19-0	1	19-8	1	20-5	1	20-6				
42	-	-	-	17-8¾	23-1½	16-8	1-9	4	23-9	19	10-6	6	5-4	6	3-0	1	17-7	1	18-4	1	19-0	1	19-9	1	20-6	1	21-2	1	21-11	1	22-8	1	23-5	1	23-6		
48	-	-	-	19-11¾	26-2¼	18-11	2-0	4	26-7	22	11-8	6	5-11	6	3-3	1	19-10	1	20-6	1	21-3	1	22-0	1	22-9	1	23-5	1	24-2	1	24-11	1	25-8	1	26-4	1	26-6
54	-	-	-	22-5¾	29-5⅛	21-5	2-3	4	29-8	24	12-8	8	6-6	6	3-6	1	22-4	1	23-0	1	23-9	1	24-6	1	25-3	1	25-11	1	26-8	1	27-5	1	28-2	1	28-10	1	29-7
60	-	-	-	24-8¾	32-7	23-8	2-6	4	33-6	25	13-11	8	7-1	6	3-9	1	24-6	1	25-3	1	26-0	1	26-9	1	27-6	1	28-2	1	28-11	1	29-8	1	31-5	1	32-2	1	32-10
66	-	-	-	27-0⅞	35-11⅛	25-11	2-9	4	36-7	27	15-5	8	7-10	6	4-3	1	26-11	1	27-7	1	28-4	1	29-0	1	29-9	1	31-6	1	32-3	1	33-0	1	33-9	1	34-6	1	35-2
72	-	-	-	29-4⅞	38-10⅞	28-2	3-0	4	39-6	30	16-5	8	8-6	6	4-7	1	29-1	1	29-10	1	31-7	1	32-4	1	33-1	1	33-10	1	34-7	1	35-3	1	36-0	1	36-9	1	37-6
84	3-0	39-5	25-8	34-1	44-10⅜	32-8	3-6	4	45-4	35	18-5	10	9-9	6	5-3	1	34-10	1	35-6	1	36-3	1	37-0	1	37-8	1	38-5	1	39-1	1	39-10	1	40-7	1	41-3	1	42-0
96	3-0	45-0	29-0	38-7	51-2⅛	37-2	4-0	4	50-11	39	20-11	12	10-9	6	5-9	1	39-7	1	40-4	1	41-0	1	41-9	1	42-6	1	43-3	1	43-11	1	44-8	1	45-5	1	46-2	1	46-10
108	3-0	50-7	32-4	43-3⅛	57-2⅜	41-8	4-6	4	56-9	44	23-0	12	12-0	6	6-4	1	44-3	1	45-0	1	45-8	1	46-5	1	47-2	1	47-10	1	48-7	1	49-4	1	50-1	1	50-10	1	51-6

PIPE DIA	J12 NO	J12 LGTH	J13 NO	J13 LGTH	J14 NO	J14 LGTH	J15 NO	J15 LGTH	J16 NO	J16 LGTH	J17 NO	J17 LGTH	J18 NO	J18 LGTH	J19 NO	J19 LGTH	J20 NO	J20 LGTH	J21 NO	J21 LGTH	J22 NO	J22 LGTH	PAY QTY 1-HEADWALL CONC CU YDS	PAY QTY 1-HEADWALL STEEL LBS
15																							1.47	150
18																							1.82	173
24																							2.58	227
30																							3.51	305
36																							4.58	408
42																							5.76	512
48																							7.14	644
54	1	29-9																					8.59	765
60	1	33-7	1	34-0																			10.34	917
66	1	35-11	1	36-7	1	37-4																	13.81	1124
72	1	38-3	1	38-11	1	39-8	1	40-5															17.27	1313
84	1	42-9	1	43-6	1	44-3	1	45-0	1	45-8	1	46-5											23.32	1716
96	1	47-7	1	48-4	1	49-0	1	49-9	1	50-6	1	51-3	1	51-11	1	52-8	1	53-1					31.39	2290
108	1	52-3	1	53-0	1	53-9	1	54-5	1	55-2	1	55-10	1	56-7	1	57-4	1	58-1	1	58-10	1	59-4	42.21	3043

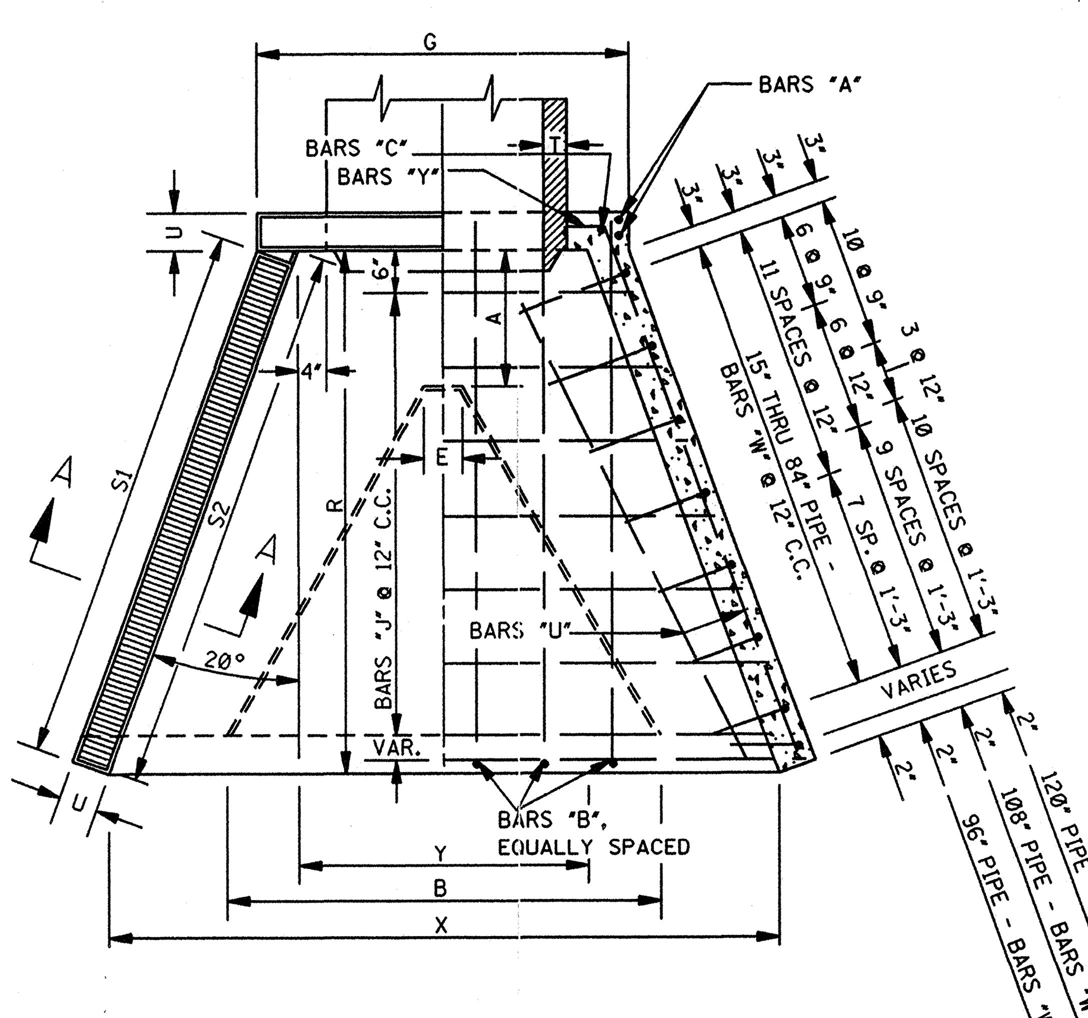

PLAN

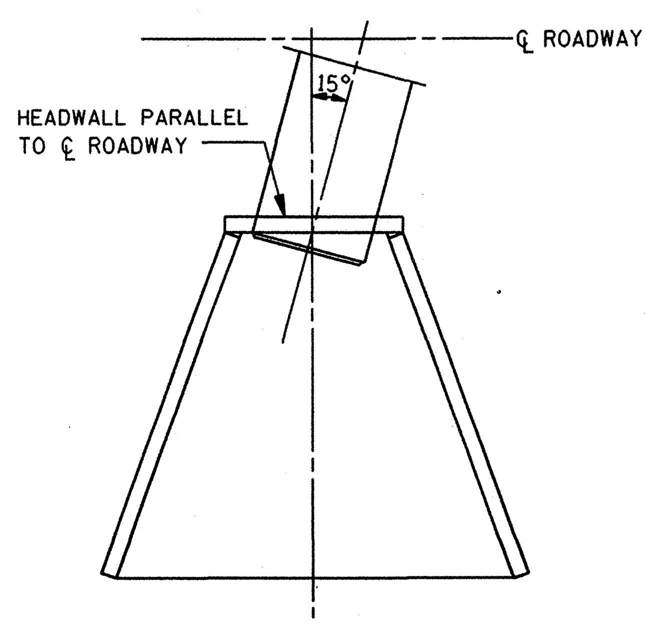

15° SKEW INSTALLATION
PLAN

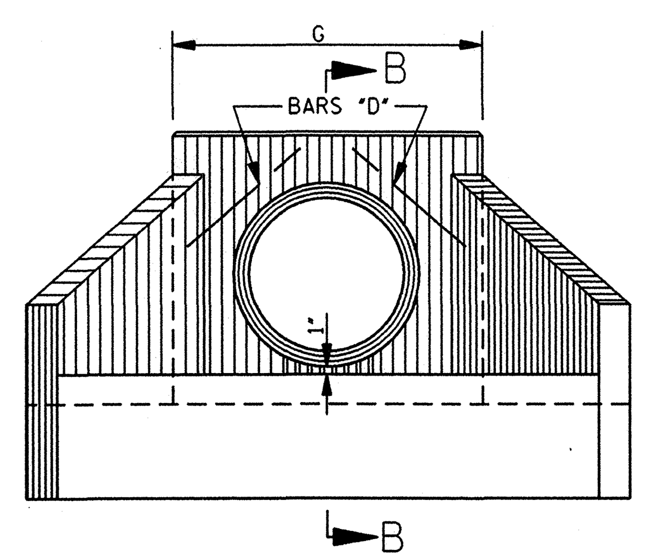

FRONT ELEVATION

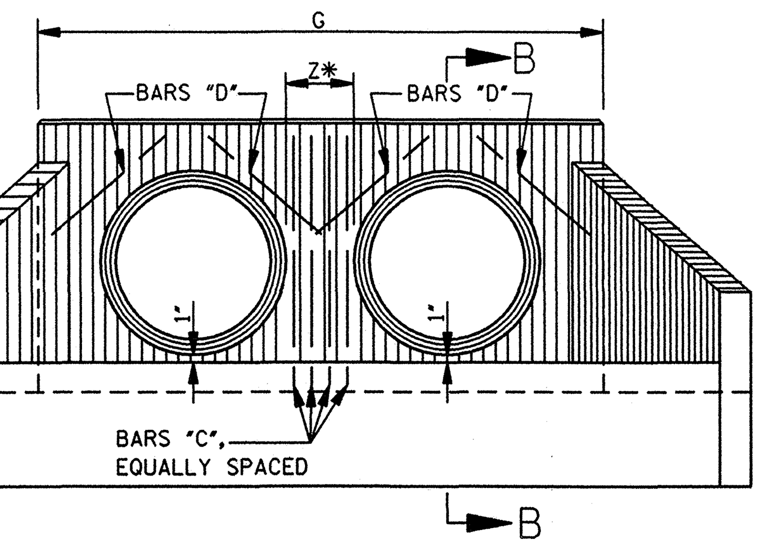

FRONT ELEVATION

*NOTE: MEASURE NORMAL (PERPENDICULAR) TO PIPE.

BY	
REVISION	
DATE	

MISSISSIPPI DEPARTMENT OF TRANSPORTATION
ROADWAY DESIGN DIVISION
STANDARD PLAN

HEADWALLS FOR CONCRETE PIPE 3:1 SLOPE – 0°– 15°SKEW

DEPARTMENT OF TRANSPORTATION MISSISSIPPI ENGLISH

WORKING NUMBER HW-3100

SHEET NUMBER 343

ISSUE DATE: OCTOBER 1, 1998