STATE	PROJECT NO.
MISS.	

DIMENSIONS AND REINFORCING COMMON TO FLARED HEADWALLS FOR SINGLE, DOUBLE AND TRIPLE LINE PIPE CULVERTS

PIPE DIA	MIN THK "T"	C	H	R	S1	S2	U	W	US NO	US LGTH	UL NO	UL LGTH
15	2¼	7	2-5	2-7	3-1⅞	3-7⅞	6	0-8	2	2-7	2	3-0
18	2½	7	2-9½	3-0	3-8⅞	4-2⅞	6	0-10	2	3-0	2	3-7
24	3	7	3-4½	3-10	4-11	5-5	6	1-0	2	3-10	2	4-9
30	3½	7	3-11½	4-6	5-10⅜	6-4⅜	6	1-3	2	4-6	2	5-9
36	4	7½	4-6½	5-3	6-11⅛	7-5⅛	6	1-5	2	5-3	2	6-9
42	4½	7½	5-1½	5-11	7-10⅜	8-4⅜	6	1-8	2	5-11	2	7-9
48	5	7½	5-8½	6-8	8-11⅛	9-5⅛	6	1-10½	2	6-8	2	8-9
54	5½	8	6-3½	7-4	9-10½	10-4½	6	2-1	2	7-4	2	9-9
60	6	8	6-10½	8-2	11-0⅝	11-6⅝	6	2-3	2	8-2	2	10-10
66	6½	8	7-7	9-2	12-5⅛	12-11⅝	6½	2-6½	2	9-2	2	12-3
72	7	8	8-2	9-10	13-3⅞	13-10⅞	7	2-9	2	9-10	2	13-2
84	8	8	9-4	11-2	15-1½	15-9½	8	3-2	2	11-2	2	15-0
96	9	8	10-5	12-7	17-1½	17-9½	8	3-6	2	12-7	2	17-0
108	10	8	11-7	14-1	19-2	19-11	9	4-0	2	14-1	2	19-0

REINFORCING STEEL (continued)

PIPE DIA	W1 S NO	W1 L NO	W1 SIZE	W1 X	W1 X1	W1 LGTH	W2 S NO	W2 L NO	W2 SIZE	W2 X	W2 X1	W2 LGTH	W3 S NO	W3 L NO	W3 SIZE	W3 X	W3 X1	W3 LGTH	W4 S NO	W4 L NO	W4 SIZE	W4 X	W4 X1	W4 LGTH
15	2	2	#4	1-1	1-8	2-9	2	2	#4	1-0	1-0	2-0												
18	2	2	#4	1-3	2-0	3-3	2	2	#4	1-0	1-0	2-0												
24	2	2	#4	1-8	2-7	4-3	2	3	#4	1-4	1-7	2-11	1	1	#4	1-0	1-2	2-2						
30	2	2	#4	2-1	3-2	5-3	2	3	#4	1-7	2-2	3-9	2	2	#4	1-0	1-5	2-5						
36	2	2	#5	2-5	3-9	6-2	2	3	#4	2-0	2-9	4-9	2	3	#4	1-0	1-7	2-7						
42	2	2	#5	2-11	4-4	7-3	2	3	#4	2-3	3-4	5-7	2	3	#4	1-7	2-4	3-11	1	1	#4	1-2	1-10	3-0
48	2	2	#5	3-1	4-10	7-11	2	3	#5	2-8	3-10	6-6	2	3	#4	1-10	2-10	4-8	2	2	#4	1-3	2-0	3-3
54	2	2	#5	3-6	5-4	8-10	2	3	#5	3-0	4-4	7-4	2	3	#4	2-3	3-4	5-7	2	3	#4	1-7	2-4	3-11
60	2	2	#5	3-10	5-11	9-9	2	3	#5	3-3	4-11	8-2	2	3	#5	2-6	3-11	6-5	2	2	#4	1-10	2-11	4-9
66	2	2	#6	4-3	6-8	10-11	2	3	#5	3-8	5-8	9-4	2	3	#5	3-2	4-8	7-10	2	2	#5	2-7	3-8	6-3
72	2	2	#6	4-9	7-5	12-2	2	3	#6	4-2	6-5	10-7	2	3	#5	3-6	5-5	8-11	2	2	#5	2-10	4-5	7-3
84	2	2	#6	5-5	8-7	14-0	2	3	#6	5-2	7-7	12-9	2	3	#6	4-6	6-7	11-1	2	2	#5	3-9	5-7	9-4
96	2	2	#7	5-7	9-6	15-1	1	3	#7	5-7	8-6	14-1	3	3	#6	5-0	7-6	12-6	2	2	#5	4-4	6-6	10-10
108	2	2	#7	6-5	10-9	17-2	2	4	#7	6-5	9-9	16-2	2	3	#7	5-10	8-9	14-7	2	3	#6	5-2	7-9	12-11

PIPE DIA	W5 S NO	W5 L NO	W5 SIZE	W5 X	W5 X1	W5 LGTH	W6 S NO	W6 L NO	W6 SIZE	W6 X	W6 X1	W6 LGTH	W7 S NO	W7 L NO	W7 SIZE	W7 X	W7 X1	W7 LGTH	W8 S NO	W8 L NO	W8 SIZE	W8 X	W8 X1	W8 LGTH
15																								
18																								
24																								
30																								
36																								
42																								
48																								
54																								
60	1	2	#4	1-8	2-5	4-1																		
66	2	3	#4	1-10	2-8	4-6																		
72	2	3	#4	2-0	3-5	5-5	1	1	#4	1-9	3-0	4-9												
84	2	3	#5	3-2	4-7	7-9	2	3	#5	2-6	3-7	6-1												
96	1	2	#5	3-8	5-6	9-2	2	2	#5	3-0	4-6	7-6	2	2	#5	2-3	3-4	5-7						
108	2	2	#5	4-6	6-9	11-3	1	2	#5	3-10	5-9	9-7	2	2	#5	3-2	4-9	7-11	1	2	#5	2-10	4-5	7-3

PIPE DIA	YS1 NO	YS1 LGTH	YS2 NO	YS2 LGTH	YS3 NO	YS3 LGTH	YS4 NO	YS4 LGTH	YS5 NO	YS5 LGTH	YS6 NO	YS6 LGTH	YS7 NO	YS7 LGTH	YS8 NO	YS8 LGTH
15	1	2-4	1	3-5												
18	1	2-4	1	3-10												
24	1	2-4	1	4-4	1	4-8										
30	1	2-4	1	4-4	1	5-4										
36	1	2-4	1	4-4	2	6-1										
42	1	2-4	1	4-4	1	6-4	1	6-9								
48	1	2-4	1	4-4	1	6-4	2	7-6								
54	1	2-4	1	4-4	1	6-4	3	8-2								
60	1	2-4	1	4-4	1	6-4	1	8-4	2	9-0						
66	1	2-4	1	4-4	1	6-4	1	8-4	3	10-0						
72	1	2-4	1	4-4	1	6-4	1	8-4	1	10-4	2	10-8				
84	1	2-4	1	4-4	1	6-4	1	8-4	1	10-4	3	12-0				
96	1	2-4	1	3-4	1	6-4	1	8-4	1	9-7	1	12-1	3	13-5		
108	1	2-3	1	3-9	1	5-9	1	7-9	1	10-3	1	11-6	1	14-0	4	15-0

PIPE DIA	YL1 NO	YL1 LGTH	YL2 NO	YL2 LGTH	YL3 NO	YL3 LGTH	YL4 NO	YL4 LGTH	YL5 NO	YL5 LGTH	YL6 NO	YL6 LGTH	YL7 NO	YL7 LGTH	YL8 NO	YL8 LGTH
15	1	2-7	1	4-3												
18	1	2-7	1	4-10												
24	1	2-7	1	5-7	1	6-0										
30	1	2-7	1	5-7	1	6-11										
36	1	2-7	1	5-7	2	8-0										
42	1	2-7	1	5-7	1	8-7	1	8-11								
48	1	2-7	1	5-7	1	8-7	2	10-0								
54	1	2-7	1	5-7	1	8-7	2	10-11								
60	1	2-7	1	5-7	1	8-7	1	10-7	2	12-1						
66	1	2-7	1	5-7	1	8-7	1	10-7	3	13-7						
72	1	2-7	1	5-7	1	8-7	1	10-7	1	13-7	2	14-6				
84	1	2-7	1	5-7	1	8-7	1	10-7	1	13-7	3	16-5				
96	1	2-8	1	5-8	1	8-8	1	10-8	1	13-2	1	15-8	3	18-3		
108	1	2-6	1	5-6	1	8-6	1	11-6	1	14-0	1	16-6	1	19-0	4	20-4

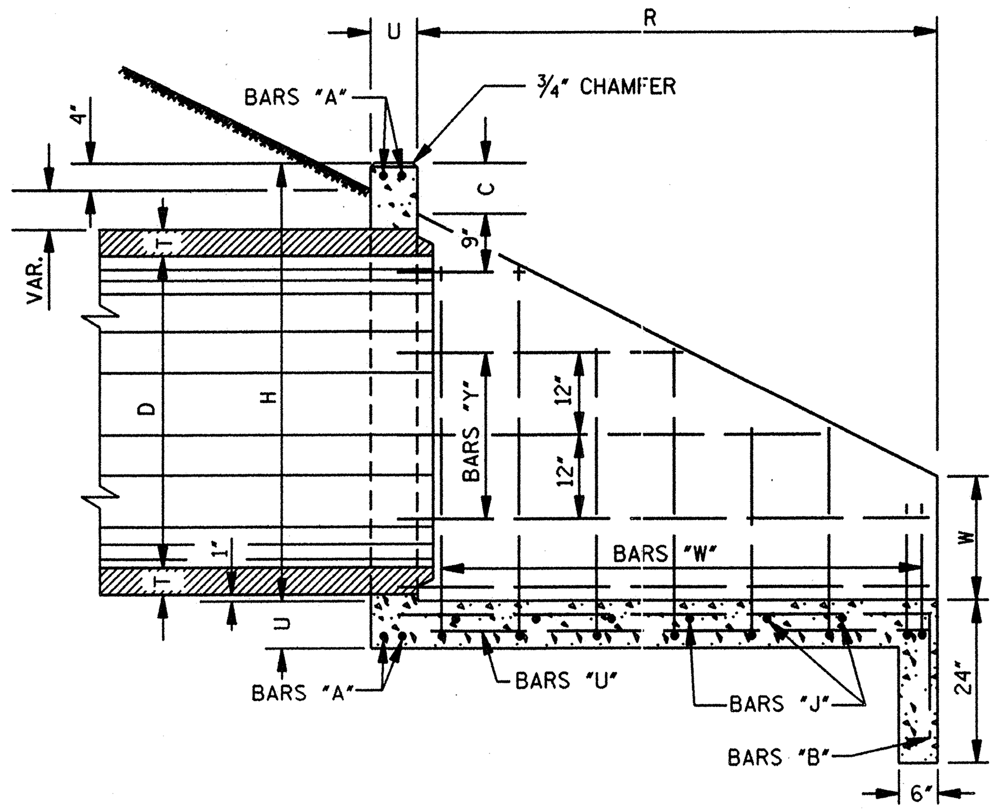

SECTION B–B

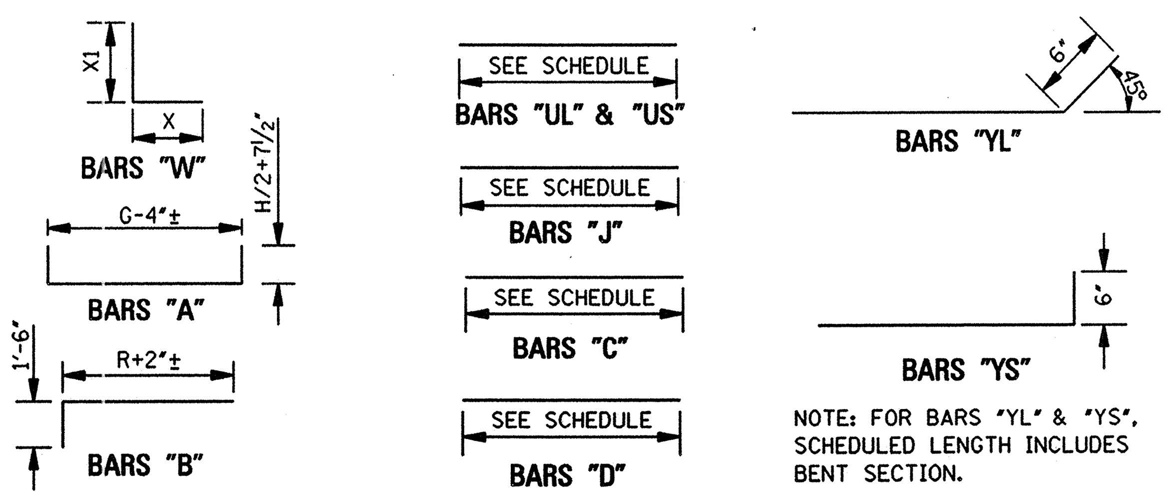

BAR BENDING DETAILS

NOTE: WHENEVER THE COMPUTED LENGTH OF BAR EXCEEDS 30', THE SCHEDULED LENGTH INCLUDES A 12" LAP. ALL BARS ARE #4 EXCEPT BARS "W". SEE SCHEDULE FOR SIZE OF BARS "W". IN BAR DESIGNATIONS (e.g. "YS" & "YL"), S DENOTES SHORT WING AND L DENOTES LONG WING.

GENERAL NOTES:

1. SPECIFICATIONS: MISSISSIPPI DEPARTMENT OF TRANSPORTATION, LATEST EDITION.
2. ALL CONCRETE SHALL BE CLASS "B".
3. ALL EXPOSED EDGES SHALL BE CHAMFERED ¾".
4. EXPOSED CONCRETE SURFACES SHALL BE FINISHED IN ACCORDANCE WITH THE APPLICABLE SECTION OF THE MDOT SPECIFICATIONS.
5. ALL LENGTHS AND QUANTITIES IN THE TABLES HEREON ARE BASED ON CONCRETE PIPE.
6. QUANTITIES SHOWN SHALL BE THE BASIS FOR FINAL PAYMENT UNLESS AUTHORIZED MODIFICATIONS ARE MADE.

DIMENSIONS AND REINFORCING FOR FLARED HEADWALL FOR SINGLE LINE PIPE CULVERT

PIPE DIA	A	B	E	G	X	Y	Z	A NO	A LGTH	B NO	B LGTH	C NO	C LGTH	D NO	D LGTH
15	-	-	-	3-8½	5-1	2-6	-	4	7-0	5	4-3	2	2-8	2	1-10
18	-	-	-	4-0	5-9⅜	2-9⅜	-	4	7-8	5	4-8	2	3-0	2	2-0
24	-	-	-	4-8	7-3½	3-5½	-	4	8-11	6	5-6	2	3-7	2	2-3
30	-	-	-	5-4⅝	8-8⅛	4-2⅛	-	4	10-3	7	6-2	2	4-2	2	2-6
36	-	-	-	6-0⅛	10-0⅝	4-9⅝	-	4	11-5	7	6-11	2	4-9	2	2-9
42	-	-	-	6-8¼	11-4¾	5-5¾	-	4	12-8	8	7-7	2	5-4	2	3-0
48	-	-	-	7-4¼	12-9⅞	6-1⅞	-	4	13-11	9	8-4	2	5-11	2	3-3
54	-	-	-	8-1½	14-3	6-11	-	4	15-4	9	9-0	2	6-6	2	3-6
60	-	-	-	8-9⅝	15-9⅛	7-7⅛	-	4	16-7	10	9-10	2	7-1	2	3-9
66	-	-	-	9-7	17-5¼	8-3¼	-	4	18-1	11	10-10	2	7-10	2	4-3
72	-	-	-	10-4¼	18-9⅜	8-11⅜	-	4	19-5	11	11-6	2	8-6	2	4-7
84	3-2	11-2	2-0	11-10¾	21-5½	10-3½	-	4	22-2	13	12-10	2	9-8	2	5-3
96	3-6	12-7	2-0	13-3	24-2⅝	11-7⅝	-	4	24-7	15	14-3	2	10-9	2	5-9
108	4-0	14-1	2-0	14-9½	27-0⅛	12-11⅞	-	4	27-4	16	15-9	2	12-0	2	6-4

REINFORCING STEEL (continued) / PAY QTY 1-HEADWALL

PIPE DIA	J1 NO	J1 LGTH	J2 NO	J2 LGTH	J3 NO	J3 LGTH	J4 NO	J4 LGTH	J5 NO	J5 LGTH	J6 NO	J6 LGTH	J7 NO	J7 LGTH	J8 NO	J8 LGTH	J9 NO	J9 LGTH	J10 NO	J10 LGTH	J11 NO	J11 LGTH	J12 NO	J12 LGTH	J13 NO	J13 LGTH	J14 NO	J14 LGTH	CONC CU YDS	STEEL LBS
15	1	3-10	1	4-10	1	5-7																							0.68	77
18	1	4-2	1	5-2	1	6-2	1	6-4																					0.87	89
24	1	4-10	1	5-10	1	6-10	1	7-10																					1.24	123
30	1	5-7	1	6-7	1	7-7	1	8-7	1	9-2																			1.63	155
36	1	6-2	1	7-2	1	8-2	1	9-2	1	10-2	1	10-7																	2.10	202
42	1	6-10	1	7-10	1	8-10	1	9-10	1	10-10	1	11-10																	2.60	237
48	1	7-6	1	8-6	1	9-6	1	10-6	1	11-6	1	12-6	1	13-4															3.19	304
54	1	8-4	1	9-4	1	10-4	1	11-4	1	12-4	1	13-4	1	14-4	1	14-9													3.80	352
60	1	9-0	1	10-0	1	11-0	1	12-0	1	13-0	1	14-0	1	15-0	1	16-0	1	16-3											4.54	426
66	1	9-9	1	10-9	1	11-9	1	12-9	1	13-9	1	14-9	1	15-9	1	16-9	1	17-9	1	18-0									5.95	543
72	1	10-6	1	11-6	1	12-6	1	13-6	1	14-6	1	15-6	1	16-6	1	17-6	1	18-6	1	19-4									7.32	618
84	1	12-0	1	13-0	1	14-0	1	15-0	1	16-0	1	17-0	1	18-0	1	19-0	1	20-0	1	21-0	1	22-0	1	22-2					10.39	845
96	1	13-5	1	14-5	1	15-5	1	16-5	1	17-5	1	18-5	1	19-5	1	20-5	1	21-5	1	22-5	1	23-5	1	24-5	1	24-11			12.85	1047
108	1	15-0	1	16-0	1	17-0	1	18-0	1	19-0	1	20-0	1	21-0	1	22-0	1	23-0	1	24-0	1	25-0	1	26-0	1	27-0	1	27-10	17.71	1411

DIMENSIONS AND REINFORCING FOR FLARED HEADWALL FOR DOUBLE LINE PIPE CULVERT

PIPE DIA	A	B	E	G	X	Y	Z	A NO	A LGTH	B NO	B LGTH	C NO	C LGTH	D NO	D LGTH
15	-	-	-	6-8¼	8-0¾	5-5¾	1-0	4	10-0	8	4-3	3	2-8	4	1-10
18	-	-	-	7-3¼	9-0⅝	6-0⅝	1-0	4	11-0	8	4-8	3	3-0	4	2-0
24	-	-	-	8-7⅜	11-2⅞	7-4⅞	1-0	4	12-11	10	5-6	3	3-7	4	2-3
30	-	-	-	10-4⅛	13-7⅝	9-1⅝	1-3	4	15-3	11	6-2	4	4-2	4	2-6
36	-	-	-	11-10½	16-1	10-8	1-6	4	17-4	13	6-11	4	4-9	4	2-9
42	-	-	-	13-6¼	18-2¾	12-3¾	1-9	4	19-6	15	7-7	4	5-4	4	3-0
48	-	-	-	15-1¾	20-7⅜	13-11⅜	2-0	4	21-9	16	8-4	4	5-11	4	3-3
54	-	-	-	16-11¾	23-1¼	15-9¼	2-3	4	24-2	18	9-0	5	6-6	4	3-6
60	-	-	-	18-7⅜	25-6⅞	17-4⅞	2-6	4	26-5	20	9-10	5	7-1	4	3-9
66	-	-	-	20-4¼	28-2⅝	19-0⅝	2-9	4	28-10	21	10-10	5	7-10	4	4-3
72	-	-	-	22-1⅛	30-6¼	20-8¼	3-0	4	32-2	23	11-6	6	8-6	4	4-7
84	3-2	24-10	15-8	25-6¾	35-1½	23-11½	3-6	4	36-10	27	12-10	6	9-8	4	5-3
96	3-6	28-2	17-7	28-10	39-9⅝	27-2⅝	4-0	4	41-2	30	14-3	7	10-9	4	5-9
108	4-0	31-7	19-6	32-3⅝	44-7	30-6	4-6	4	45-10	34	15-9	7	12-0	4	6-4

REINFORCING STEEL (continued) / PAY QTY 1-HEADWALL

PIPE DIA	J1 NO	J1 LGTH	J2 NO	J2 LGTH	J3 NO	J3 LGTH	J4 NO	J4 LGTH	J5 NO	J5 LGTH	J6 NO	J6 LGTH	J7 NO	J7 LGTH	J8 NO	J8 LGTH	J9 NO	J9 LGTH	J10 NO	J10 LGTH	J11 NO	J11 LGTH	J12 NO	J12 LGTH	J13 NO	J13 LGTH	J14 NO	J14 LGTH	CONC CU YDS	STEEL LBS
15	1	6-10	1	7-10	1	8-6																							1.01	104
18	1	7-5	1	8-5	1	9-5	1	9-7																					1.29	121
24	1	8-9	1	9-9	1	10-9	1	11-9																					1.82	164
30	1	10-6	1	11-6	1	12-6	1	13-6	1	14-2																			2.45	210
36	1	12-0	1	13-0	1	14-0	1	15-0	1	16-0	1	16-7																	3.17	279
42	1	13-8	1	14-8	1	15-8	1	16-8	1	17-8	1	18-8	1	18-9															3.96	342
48	1	15-4	1	16-4	1	17-4	1	18-4	1	19-4	1	20-4	1	21-1															4.86	412
54	1	17-2	1	18-2	1	19-2	1	20-2	1	21-2	1	22-2	1	23-2	1	23-7													5.87	494
60	1	18-9	1	19-9	1	20-9	1	21-9	1	22-9	1	23-9	1	24-9	1	25-9	1	26-1											7.03	596
66	1	20-6	1	21-6	1	22-6	1	23-6	1	24-6	1	25-6	1	26-6	1	27-6	1	28-6	1	28-9									9.19	738
72	1	22-3	1	23-3	1	24-3	1	25-3	1	26-3	1	27-3	1	28-3	1	29-3	1	31-3	1	32-1									11.33	855
84	1	25-9	1	26-9	1	27-9	1	28-9	1	29-9	1	31-9	1	32-9	1	33-9	1	34-9	1	35-9	1	36-9	1	36-10					15.69	1152
96	1	29-0	1	30-0	1	32-0	1	33-0	1	34-0	1	35-0	1	36-0	1	37-0	1	38-0	1	39-0	1	40-0	1	41-0	1	41-6			19.51	1421
108	1	33-6	1	34-6	1	35-6	1	36-6	1	37-6	1	38-6	1	39-6	1	40-6	1	41-6	1	42-6	1	43-6	1	44-6	1	45-6	1	46-4	26.56	1866

DIMENSIONS AND REINFORCING FOR FLARED HEADWALL FOR TRIPLE LINE PIPE CULVERT

PIPE DIA	A	B	E	G	X	Y	Z	A NO	A LGTH	B NO	B LGTH	C NO	C LGTH	D NO	D LGTH
15	-	-	-	9-8	11-0½	8-5½	1-0	4	13-0	11	4-3	4	2-8	6	1-10
18	-	-	-	10-6⅜	12-4	9-4	1-0	4	14-3	12	4-8	4	3-0	6	2-0
24	-	-	-	12-6⅝	15-2¼	11-4¼	1-0	4	16-10	14	5-6	4	3-7	6	2-3
30	-	-	-	15-3½	18-7	14-1	1-3	4	20-2	16	6-2	6	4-2	6	2-6
36	-	-	-	17-9	21-9½	16-6½	1-6	4	23-2	19	6-11	6	4-9	6	2-9
42	-	-	-	20-4¼	25-0¾	19-1¾	1-9	4	26-4	21	7-7	6	5-4	6	3-0
48	-	-	-	22-11⅜	28-4⅞	21-8⅞	2-0	4	29-7	24	8-4	6	5-11	6	3-3
54	-	-	-	25-10	31-11½	24-7½	2-3	4	34-0	27	9-0	8	6-6	6	3-6
60	-	-	-	28-5¼	35-4¾	27-2¾	2-6	4	37-3	29	9-10	8	7-1	6	3-9
66	-	-	-	31-1⅝	38-11⅞	29-9⅞	2-9	4	40-8	32	10-10	8	7-10	6	4-3
72	-	-	-	33-10	42-3	32-5	3-0	4	43-11	35	11-6	10	8-6	6	4-7
84	3-2	38-6	29-4	39-2¾	48-9⅜	37-7⅜	3-6	4	50-6	40	12-10	10	9-8	6	5-3
96	3-6	43-9	33-2	44-5⅛	55-4¾	42-9¾	4-0	4	56-9	45	14-3	14	10-9	6	5-9
108	4-0	49-1	37-0	49-9⅞	62-1	48-0	4-6	4	64-4	50	15-9	14	12-0	6	6-4

REINFORCING STEEL (continued) / PAY QTY 1-HEADWALL

PIPE DIA	J1 NO	J1 LGTH	J2 NO	J2 LGTH	J3 NO	J3 LGTH	J4 NO	J4 LGTH	J5 NO	J5 LGTH	J6 NO	J6 LGTH	J7 NO	J7 LGTH	J8 NO	J8 LGTH	J9 NO	J9 LGTH	J10 NO	J10 LGTH	J11 NO	J11 LGTH	J12 NO	J12 LGTH	J13 NO	J13 LGTH	J14 NO	J14 LGTH	CONC CU YDS	STEEL LBS
15	1	9-10	1	10-10	1	11-7																							1.33	131
18	1	10-8	1	11-8	1	12-8	1	12-10																					1.70	155
24	1	12-9	1	13-9	1	14-9	1	15-8																					2.39	206
30	1	15-6	1	16-6	1	17-6	1	18-6	1	19-1																			3.25	269
36	1	17-11	1	18-11	1	19-11	1	20-11	1	21-11	1	22-3																	4.23	356
42	1	20-6	1	21-6	1	22-6	1	23-6	1	24-6	1	25-6																	5.32	417
48	1	23-2	1	24-2	1	25-2	1	26-2	1	27-2	1	28-2	1	28-11															6.58	527
54	1	26-0	1	27-0	1	28-0	1	29-0	1	30-0	1	32-0	1	33-0	1	33-6													7.94	642
60	1	28-7	1	29-7	1	31-7	1	32-7	1	33-7	1	34-7	1	35-7	1	36-7	1	36-11											9.53	767
66	1	32-4	1	33-4	1	34-4	1	35-4	1	36-4	1	37-4	1	38-4	1	39-4	1	40-4	1	40-6									12.44	936
72	1	35-0	1	36-0	1	37-0	1	38-0	1	39-0	1	40-0	1	41-0	1	42-0	1	43-0	1	43-10									15.35	1092
84	1	40-5	1	41-5	1	42-5	1	43-5	1	44-5	1	45-5	1	46-5	1	47-5	1	48-5	1	49-5	1	50-5							20.99	1412
96	1	45-7	1	46-7	1	47-7	1	48-7	1	49-7	1	50-7	1	51-7	1	52-7	1	53-7	1	54-7	1	55-7	1	56-7	1	57-1			26.17	1800
108	1	51-0	1	52-0	1	53-0	1	54-0	1	55-0	1	56-0	1	57-0	1	58-0	1	59-0	1	60-0	1	62-0	1	63-0	1	64-0	1	64-10	35.42	2320

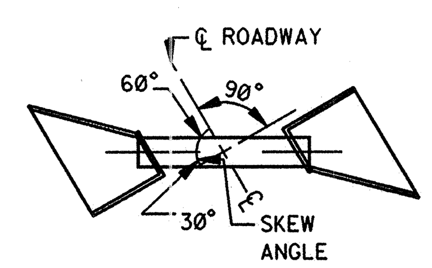

INSTALLATION

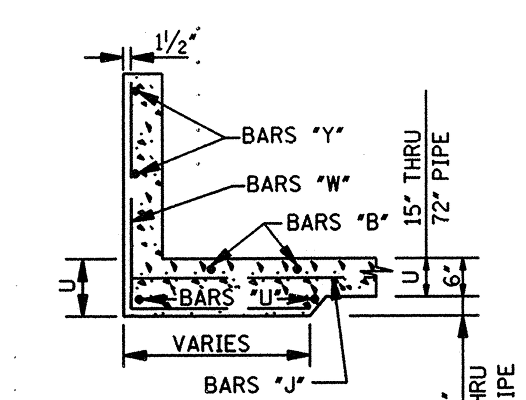

SECTION A–A

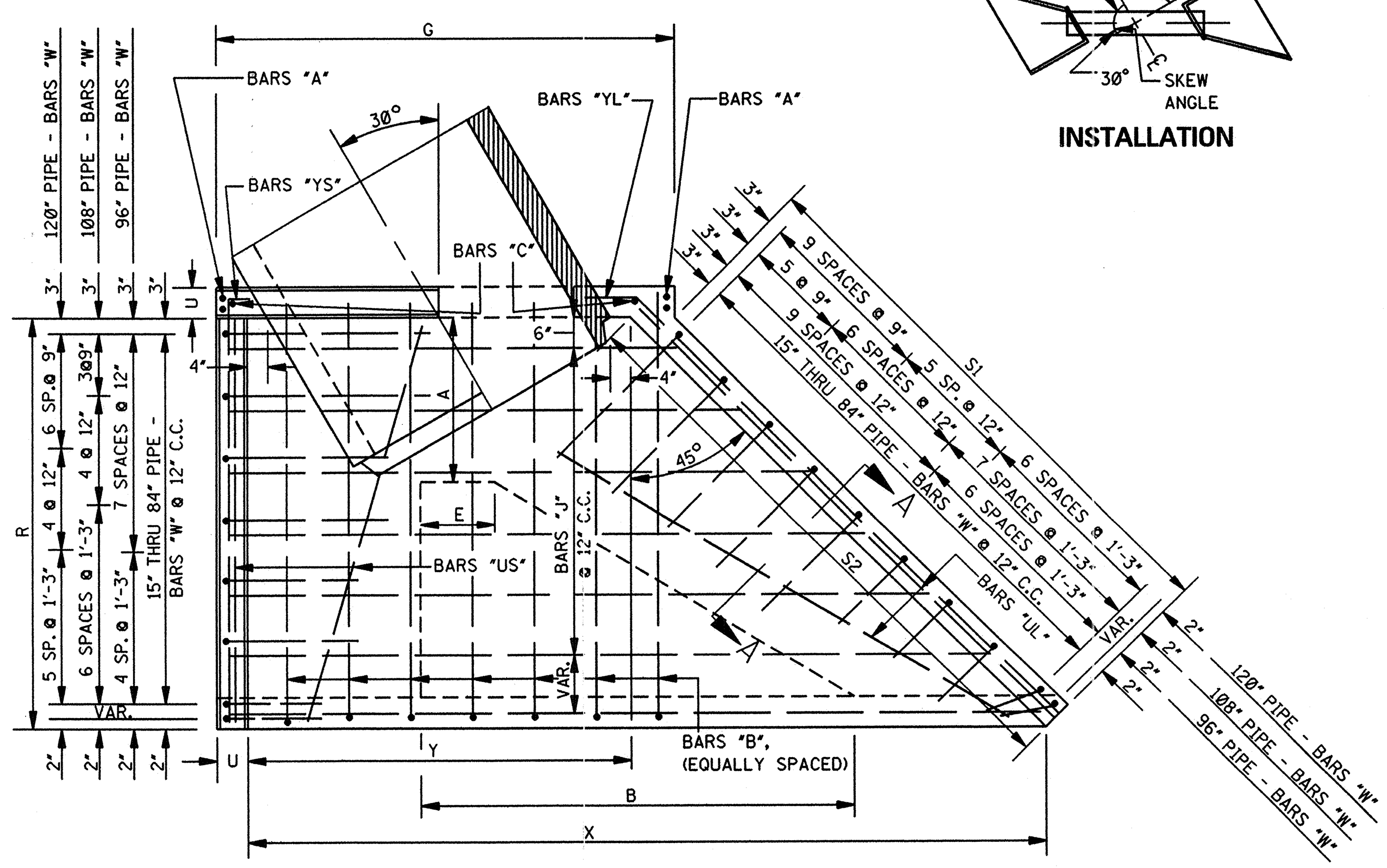

PLAN

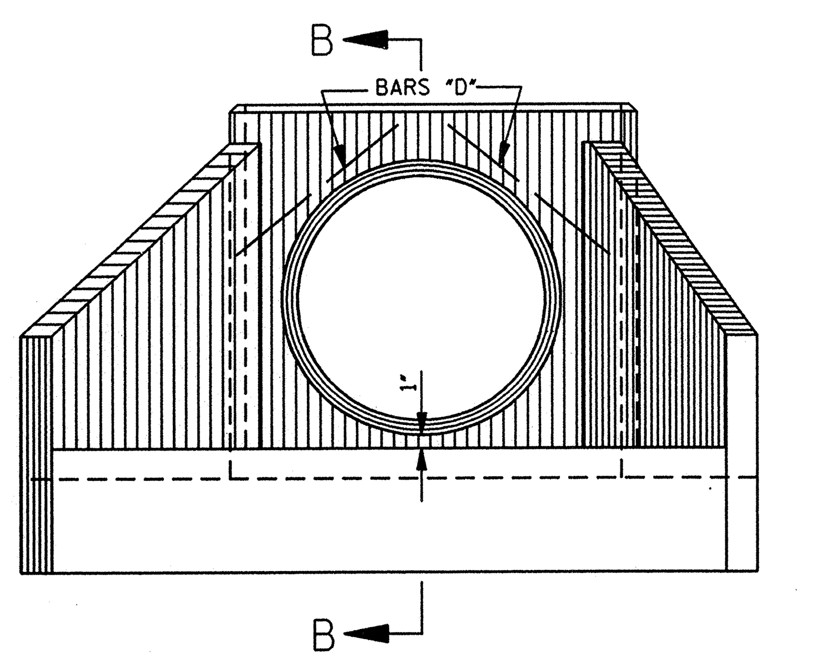

FRONT ELEVATION

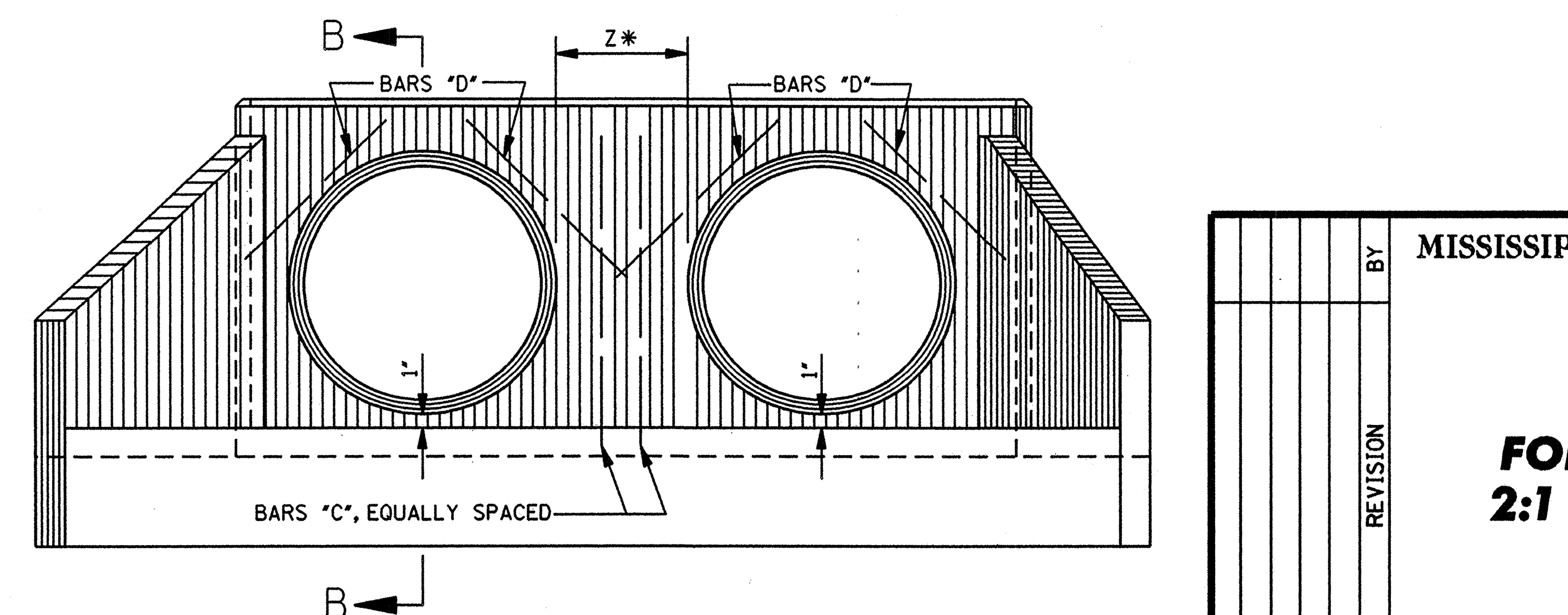

FRONT ELEVATION

*NOTE: MEASURE NORMAL (PERPENDICULAR) TO PIPE.

BY	
REVISION	
DATE	

MISSISSIPPI DEPARTMENT OF TRANSPORTATION
ROADWAY DESIGN DIVISION
STANDARD PLAN

HEADWALLS FOR CONCRETE PIPE 2:1 SLOPE – 30° SKEW

DEPARTMENT OF TRANSPORTATION MISSISSIPPI — ENGLISH

WORKING NUMBER HW-2130

ISSUE DATE: OCTOBER 1, 1998

SHEET NUMBER 341