STATE	PROJECT NO.
MISS.	

"A", #4 BARS	AS PER TABLE
"B", #4 BARS	D (OR SPAN) +2T+9"
"C", #4 BARS	34"
"D", #4 BARS	D (OR RISE) +T+4"

BARS "A", "B", "C" & "D"

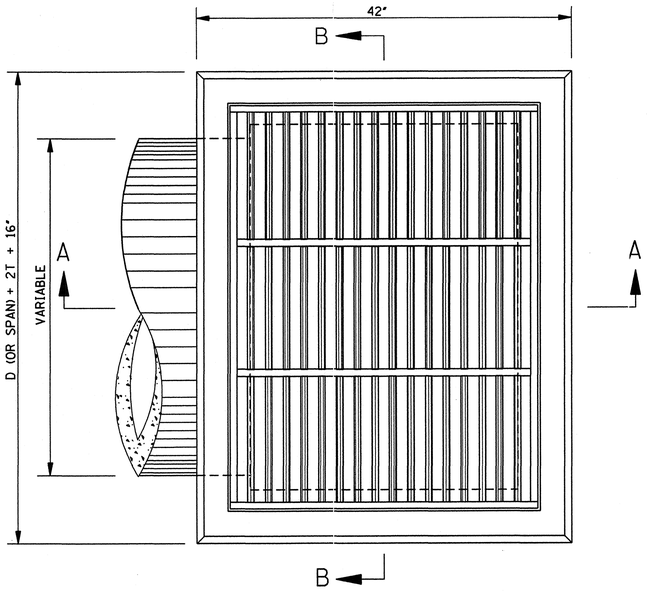

PLAN

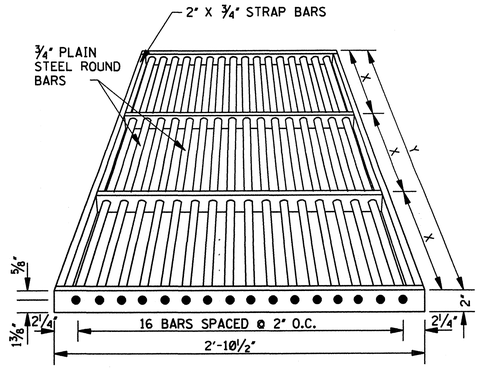

BAR GRATE DETAILS

NOTE: JUNCTIONS OF ROUND AND STRAP BARS SHALL BE WELDED. GRATE SHALL BE SHOP COATED WITH APPROVED COAL TAR PITCH VARNISH.

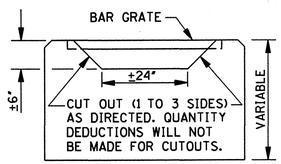

ELEVATION

MODIFIED PIPE OR BOX CULVERT INLET

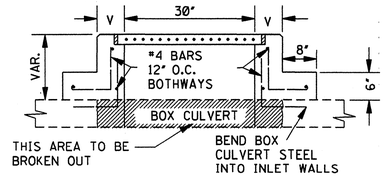

SECTION C–C

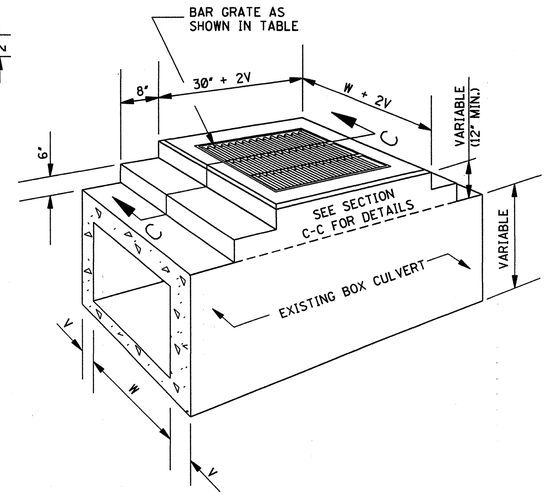

SECTIONAL PERSPECTIVE

INLET ON EXISTING BOX CULVERT

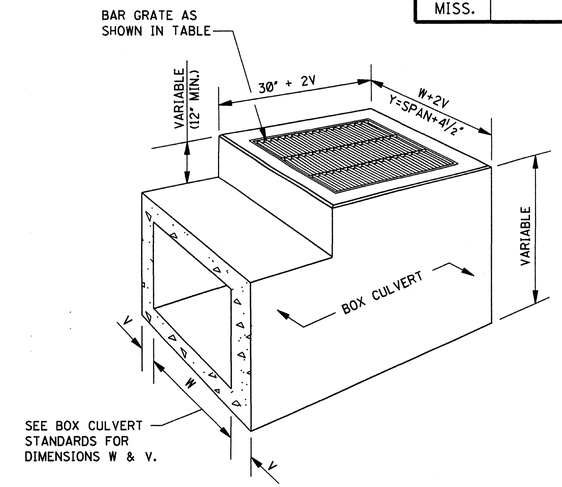

SECTIONAL PERSPECTIVE

INLET USED IN LIEU OF HEADWALLS

LENGTH AND WEIGHT OF GRATING

PIPE INLETS					BOX CULVERT INLETS				
PIPE SIZE	Y	X	NO. X-SPANS	WEIGHT (lbs)	BOX CULVERT SIZE	Y	X	NO. X-SPANS	WEIGHT (lbs)
18"	2'-7 1/2"	1'-3 3/4"	2	127	2' X 2'	2'-4 1/2"	1'-2 1/4"	2	119
22" X 13"	2'-11 1/2"	1'-5 3/4"	2	139	3' X 2'	3'-4 1/2"	1'-1 1/2"	3	166
24"	3'-2 1/2"	1'-7 1/4"	2	147	4' X 2'	4'-4 1/2"	1'-5 1/2"	3	200
29" X 18"	3'-7"	1'-2 11/32"	3	173	5' X 2'	5'-4 1/2"	1'-4 1/8"	4	247
30"	3'-9 1/2"	1'-3 5/32"	3	180	6' X 2'	6'-4 1/2"	1'-3 9/64"	5	293
36"	4'-4 1/2"	1'-5 1/2"	3	200	7' X 2'	7'-4 1/2"	1'-5 11/16"	5	328
42"	4'-11 1/2"	1'-2 7/8"	4	232	8' X 2'	8'-4 3/4"	1'-4 3/4"	6	374
48"	5'-6 1/2"	1'-4 5/8"	4	252	3' X 3'	3'-4 1/2"	1'-1 1/2"	3	166
54"	6'-1 1/2"	1'-6 3/8"	4	272	4' X 3'	4'-4 1/2"	1'-5 1/2"	3	200
60"	6'-8 1/2"	1'-4 3/32"	5	305	5' X 3'	5'-4 1/2"	1'-4 1/8"	4	247
					6' X 3'	6'-4 1/2"	1'-3 9/64"	5	293

QUANTITIES

PIPE SIZE	MIN. DEPTH TO F.L.	MIN. DEPTH INLET		EACH ADDED FOOT		PIPE OPENING DEDUCTION (yd^3)	T	BARS/SIZES			
		CONC* (yd^3)	STEEL (lbs)	CONC (yd^3)	STEEL (lbs)			"A" / #4	"B" / #4	"C" / #4	"D" / #4
								NO. @ LGTH.	NO. @ LGTH.	NO. @ LGTH.	NO. @ LGTH.
18"	2.209'	0.623	42	0.213	13	0.053	2 1/2"	2 @ 21"	8 @ 32"	7 @ 34"	9 @ 24 1/2"
22" X 13"	1.833'	0.586	42	0.225	14	0.053	2 1/2"	2 @ 25"	8 @ 36"	7 @ 34"	9 @ 20"
24"	2.750'	0.800	55	0.235	14	0.091	3"	2 @ 25"	9 @ 39"	9 @ 34"	9 @ 31"
29" X 18"	2.250'	0.742	57	0.248	16	0.087	3"	2 @ 30"	9 @ 43 1/2"	9 @ 34"	11 @ 25"
30"	3.292'	0.992	70	0.256	16	0.138	3 1/2"	2 @ 30"	9 @ 46"	11 @ 34"	11 @ 37 1/2"
36"	3.834'	1.198	85	0.278	17	0.196	4"	2 @ 33"	10 @ 53"	13 @ 34"	11 @ 44"
42"	4.375'	1.418	93	0.299	18	0.263	4 1/2"	2 @ 36"	10 @ 60"	13 @ 34"	11 @ 50 1/2"
48"	4.917'	1.653	109	0.321	19	0.340	5"	2 @ 39"	11 @ 67"	15 @ 34"	11 @ 57"
54"	5.458'	1.902	136	0.343	21	0.427	5 1/2"	2 @ 42"	12 @ 74"	19 @ 34"	13 @ 63 1/2"
60"	6.000'	2.165	146	0.364	21	0.524	6"	2 @ 47"	12 @ 81"	19 @ 34"	13 @ 70"

*NOTE: ONE (1) PIPE OPENING HAS BEEN DEDUCTED FROM THE STRUCTURE.

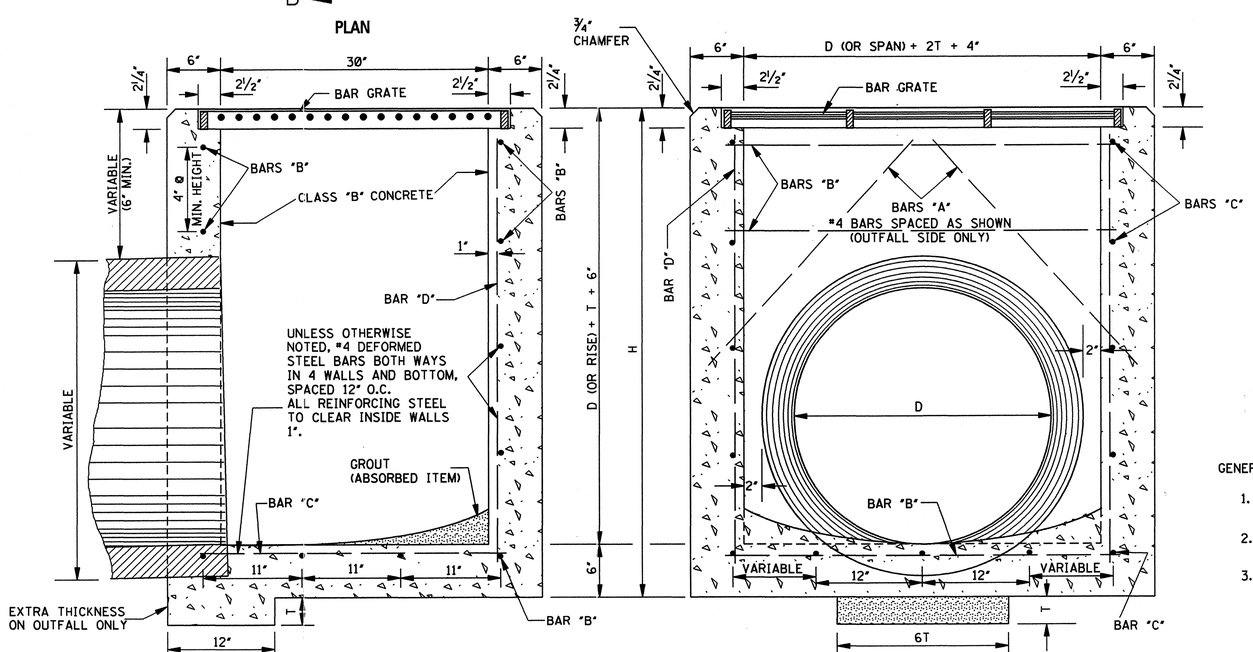

PIPE CULVERT INLET

GENERAL NOTES:

1. THE MDOT STANDARD SPECIFICATIONS SHALL APPLY TO ITEMS UNLESS OTHERWISE SPECIFIED.
2. QUANTITIES SHOWN WILL BE THE BASIS OF PAYMENT UNLESS AUTHORIZED MODIFICATIONS ARE MADE.
3. BOX CULVERTS:
   A. UNLESS OTHERWISE SHOWN, THE DETAILS OF THE BOX CULVERT INLETS SHALL CONFORM TO THOSE SHOWN FOR THE PIPE INLETS.
   B. BOX CULVERT REINFORCEMENT SHALL BE CONTINUED AND RESHAPED TO ACCOMMODATE THE INLET BOX. ADDITIONAL BARS SHALL BE THE SAME DIAMETER AS THOSE IN THE BOX CULVERT AND THE CONCRETE SHALL BE THE SAME. QUANTITIES ARE TO BE COMPUTED IN CONJUNCTION WITH QUANTITIES FOR BOX CULVERT.

DATE	REVISION	BY

MISSISSIPPI DEPARTMENT OF TRANSPORTATION
ROADWAY DESIGN DIVISION
STANDARD PLAN

DROP INLET AND GRATE DETAILS FOR PIPE AND BOX CULVERTS

ENGLISH

WORKING NUMBER B-9

ISSUE DATE: OCTOBER 1, 1998

SHEET NUMBER 325