STATE	PROJECT NO.
MISS.	

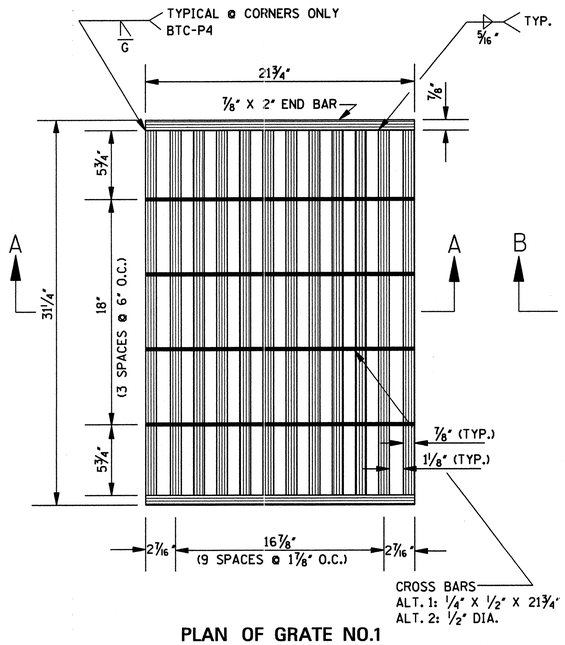

PLAN OF GRATE NO.1

NOTE: FOR OTHER GRATE DETAILS SEE SHEET IG-2.

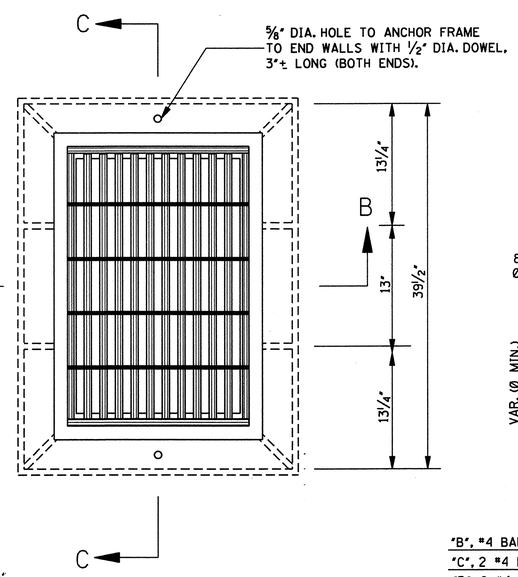

PLAN OF INLET

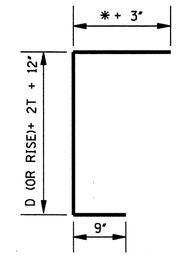

8 #4 BARS,
0.5[D(OR SPAN)+2D(OR RISE)+6T+38"] LONG

BARS "A"

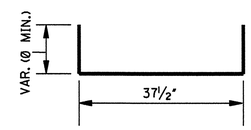

4 #4 BARS, VAR. LENGTH

BARS "U"

"B", #4 BARS	37 1/2"
"C", 2 #4 BARS	28"
"D", 6 #4 BARS	D (OR SPAN) + 2T + 18"

BARS "B", "C" & "D"

BAR DETAILS

*NOTE:

$$* \left[\frac{D\ (\text{OR SPAN}) + 2T - 10''}{2}\right]$$

QUANTITIES

PIPE SIZE	MIN. DEPTH TO F.L.	MIN. DEPTH INLET CONC. (yd³)	MIN. DEPTH INLET STEEL (lbs)	PIPE OPENING DEDUCTION (yd³)	T	BARS/SIZES "A" #4 NO. @ LGTH.	"B" #4 NO. @ LGTH.	"C" #4 NO. @ LGTH.	"D" #4 NO. @ LGTH.	"U" #4 NO. @ LGTH.
18"	2.792'	0.869	76	0.053	2 1/2"	8 @ 4'-5 1/2"	12 @ 3'- 1 1/2"	2 @ 2'-4"	6 @ 3'-5"	4 @ 3'-9 1/2"
24"	3.334'	1.117	87	0.091	3"	8 @ 5'-4"	14 @ 3'- 1 1/2"	2 @ 2'-4"	6 @ 4'-0"	4 @ 3'-9 1/2"
30"	3.875'	1.385	94	0.138	3 1/2"	8 @ 6'-2 1/2"	14 @ 3'- 1 1/2"	2 @ 2'-4"	6 @ 4'-7"	4 @ 3'-9 1/2"
36"	4.417'	1.671	105	0.196	4"	8 @ 7'-1"	16 @ 3'- 1 1/2"	2 @ 2'-4"	6 @ 5'-2"	4 @ 3'-9 1/2"
42"	4.959'	1.978	116	0.263	4 1/2"	8 @ 7'-11 1/2"	18 @ 3'- 1 1/2"	2 @ 2'-4"	6 @ 5'-9"	4 @ 3'-9 1/2"
48"	5.500'	2.305	123	0.340	5"	8 @ 8'-10"	18 @ 3'- 1 1/2"	2 @ 2'-4"	6 @ 6'-4"	4 @ 3'-9 1/2"
54"	6.042'	2.650	135	0.427	5 1/2"	8 @ 9'-8 1/2"	20 @ 3'- 1 1/2"	2 @ 2'-4"	6 @ 6'-11"	4 @ 3'-9 1/2"
60"	6.583'	3.016	146	0.524	6"	8 @ 10'-7"	22 @ 3'- 1 1/2"	2 @ 2'-4"	6 @ 7'-6"	4 @ 3'-9 1/2"
66"	7.125'	3.402	153	0.630	6 1/2"	8 @ 11'-5 1/2"	22 @ 3'- 1 1/2"	2 @ 2'-4"	6 @ 8'-1"	4 @ 3'-9 1/2"
72"	7.667'	3.806	164	0.747	7"	8 @ 12'-4"	24 @ 3'- 1 1/2"	2 @ 2'-4"	6 @ 8'-8"	4 @ 3'-9 1/2"
22" X 13"	2.417'	0.855	76	0.053	2 1/2"	8 @ 4'-3"	12 @ 3'- 1 1/2"	2 @ 2'-4"	6 @ 3'-9"	4 @ 3'-9 1/2"
29" X 18"	2.833'	1.085	83	0.087	3"	8 @ 5'-0 1/4"	12 @ 3'- 1 1/2"	2 @ 2'-4"	6 @ 4'-4 1/2"	4 @ 3'-9 1/2"
36" X 23"	3.250'	1.358	94	0.129	3 1/2"	8 @ 5'-10"	14 @ 3'- 1 1/2"	2 @ 2'-4"	6 @ 5'-1"	4 @ 3'-9 1/2"
44" X 27"	3.635'	1.631	101	0.185	4"	8 @ 6'-7 1/2"	14 @ 3'- 1 1/2"	2 @ 2'-4"	6 @ 5'-10"	4 @ 3'-9 1/2"
51" X 31"	4.068'	1.942	113	0.245	4 1/2"	8 @ 7'-5 1/2"	16 @ 3'- 1 1/2"	2 @ 2'-4"	6 @ 6'-6"	4 @ 3'-9 1/2"
58" X 36"	4.500'	2.269	120	0.318	5"	8 @ 8'-3"	16 @ 3'- 1 1/2"	2 @ 2'-4"	6 @ 7'-2 1/2"	4 @ 3'-9 1/2"
65" X 40"	4.875'	2.575	130	0.394	5 1/2"	8 @ 9'-0"	18 @ 3'- 1 1/2"	2 @ 2'-4"	6 @ 7'-10"	4 @ 3'-9 1/2"
73" X 45"	5.333'	2.966	139	0.489	6"	8 @ 9'-10 1/2"	18 @ 3'- 1 1/2"	2 @ 2'-4"	6 @ 8'-7"	4 @ 3'-9 1/2"
88" X 54"	6.167'	3.765	156	0.688	7"	8 @ 11'-6"	20 @ 3'- 1 1/2"	2 @ 2'-4"	6 @ 10'-0"	4 @ 3'-9 1/2"

NOTES:
1. ONE (1) PIPE OPENING HAS BEEN DEDUCTED FROM THE STRUCTURE.
2. FOR EACH ADDITIONAL FOOT OF INLET HEIGHT, ADD 0.184 yd³ CLASS "B" CONCRETE AND 17 lbs REINFORCING STEEL.
3. 4 BARS "B" AND 2 BARS "C" REQUIRED PER EACH ADDITIONAL FOOT OF INLET HEIGHT.
4. WEIGHT OF FRAME CASTING = 244 lbs.
   WEIGHT OF GRATE = SEE SHEET IG-2.

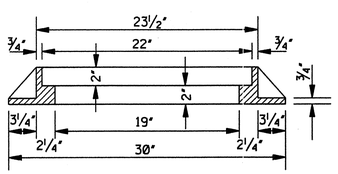

SECTION B–B
(FRAME)

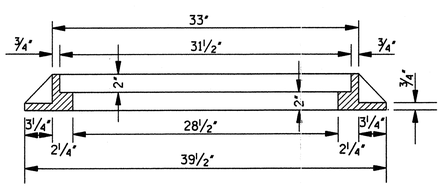

SECTION C–C
(FRAME)

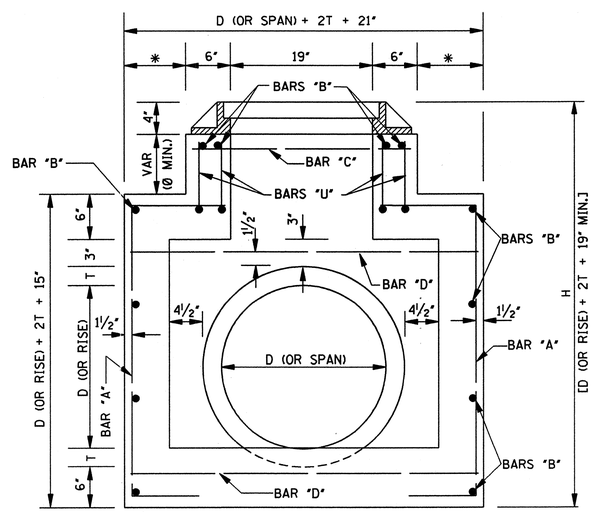

SECTION B–B

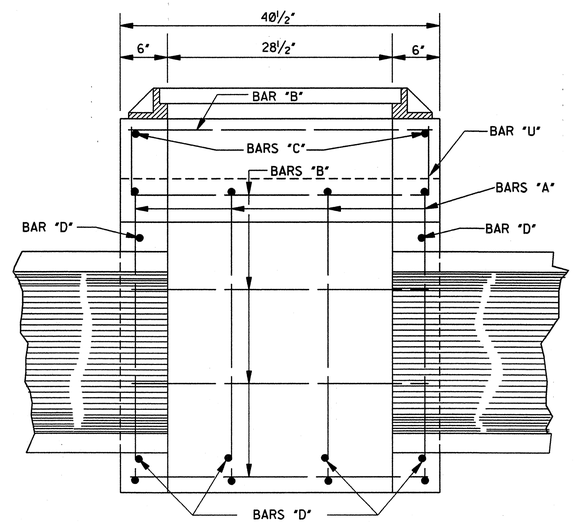

SECTION C–C

GENERAL NOTES:

1. QUANTITIES SHOWN WILL BE THE BASIS OF PAYMENT UNLESS AUTHORIZED MODIFICATIONS ARE MADE.
2. CONCRETE SHALL BE CLASS "B" CONCRETE AND REINFORCING STEEL SHALL BE DEFORMED BARS.
3. THE CONTRACTOR HAS THE OPTION TO PROVIDE GRATE NO. 1 OR GRATE NO. 2 AS SHOWN ON SHEET IG-2.
4. FRAME TO BE GRAY IRON CASTING, (AASHTO M 105, CLASS 30).

DATE	REVISION	BY

MISSISSIPPI DEPARTMENT OF TRANSPORTATION
ROADWAY DESIGN DIVISION
STANDARD PLAN

STORM SEWER INLET
TYPE SS–3

ENGLISH

WORKING NUMBER
SS-3

ISSUE DATE: OCTOBER 1, 1998

SHEET NUMBER
323