| STATE | PROJECT NO. |
|---|---|
| MISS. | |

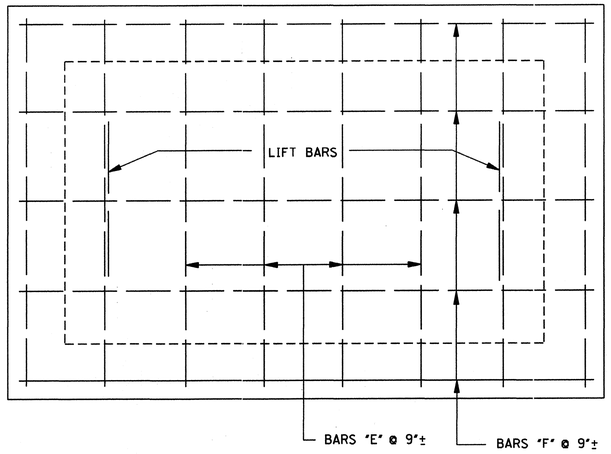


PLAN OF COVER

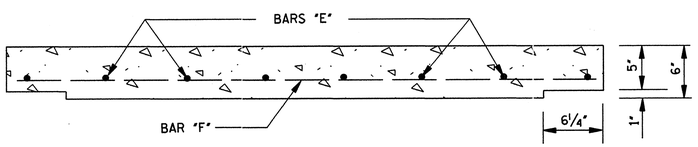


ELEVATION OF COVER

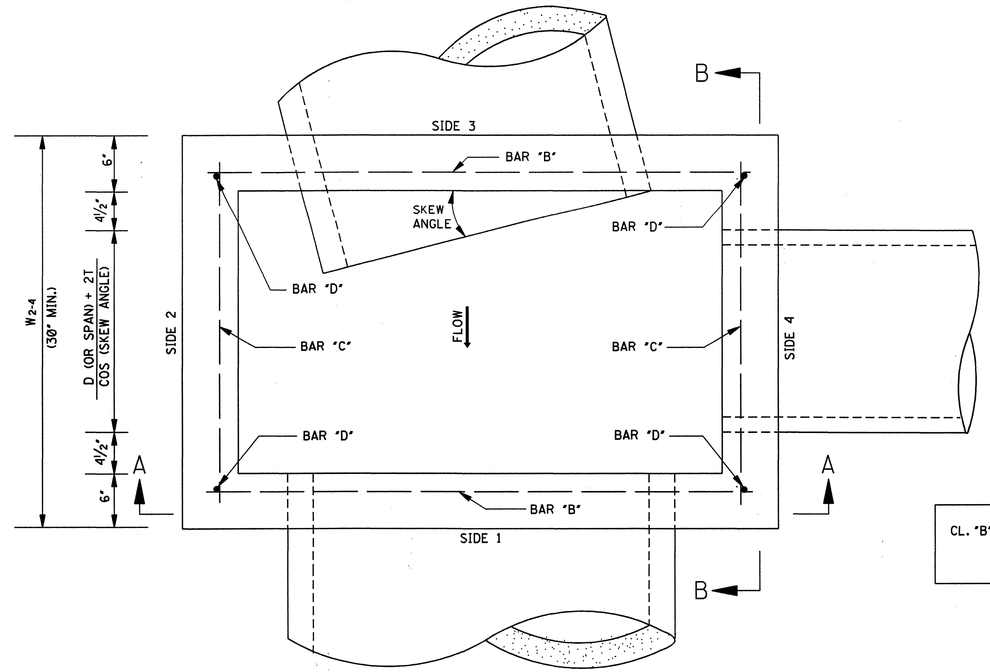


PLAN

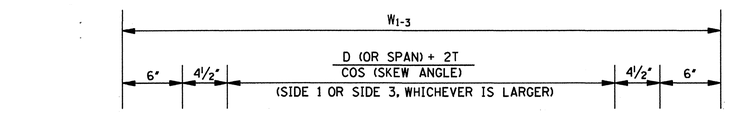


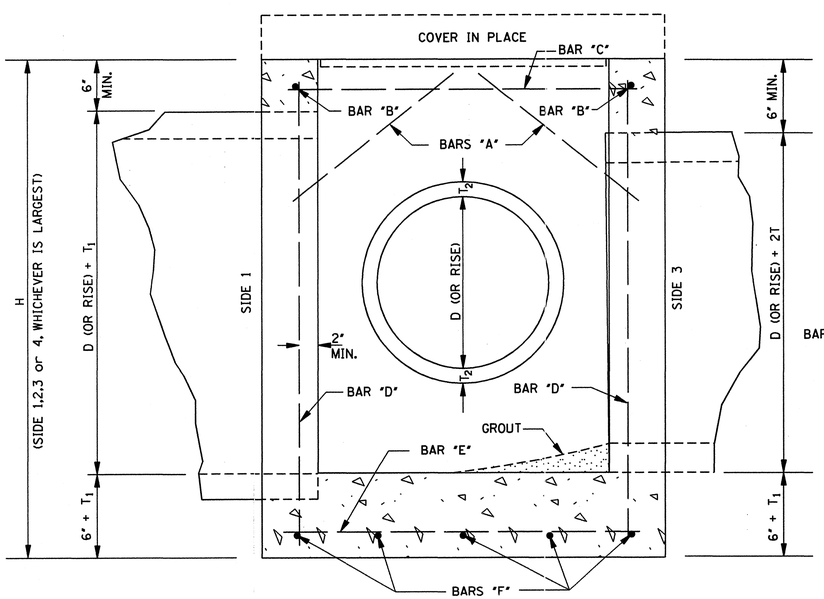


SECTION B–B

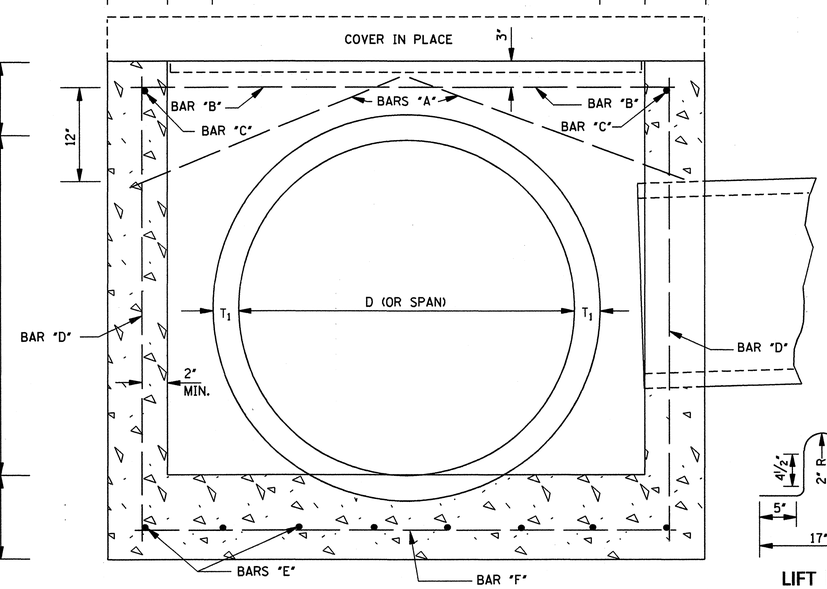


SECTION A–A

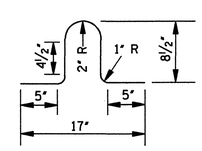


LIFT BAR

NOTE: LIFT BAR TO BE FABRICATED FROM A #4 BAR 30" LONG. TWO LIFT BARS ARE REQUIRED. REINFORCING STEEL FOR 2 LIFT BARS = 3.3 lbs.

## REINFORCING BAR LIST

| BAR | SIZE | NUMBER REQUIRED | LENGTH |
|---|---|---|---|
| A | #4 | 2 PER PIPE OPENING | $\sqrt{196" + \left(\frac{W^*}{2} + 2"\right)^2}$ |
| B | #4 | 2 | $W_{1-3}$ - 6" |
| C | #4 | 2 | $W_{2-4}$ - 6" |
| D | #4 | 4 | H - 6" |
| E | #4 | $2\left[\left(\frac{W_{1-3}}{9"}\right)^{**} + 1\right]$ | $W_{2-4}$ - 4" |
| F | #4 | $2\left[\left(\frac{W_{2-4}}{9"}\right)^{**} + 1\right]$ | $W_{1-3}$ - 4" |

NOTE: VARIABLES AND DESIGNATIONS ARE AS FOLLOWS:
D (OR SPAN) = PIPE DIAMETER (OR SPAN)
$W_{1-3}$ = WIDTH OF SIDE 1 & SIDE 3
$W_{2-4}$ = WIDTH OF SIDE 2 & SIDE 4
W* = $W_{1-3}$ OR $W_{2-4}$ (SIDE OF ENTERING PIPE)
** = ROUND TO NEAREST WHOLE NUMBER

CL. "B" CONC. ($yd^3$) = [(Q1 + Q2) / 46,656 ] - $\sum$ PIPE OPENING DEDUCTIONS
WHERE: $Q1 = [5"W_{1-3}W_{2-4}] + [1"(W_{1-3} - 12.5")(W_{2-4} - 12.5")] + [(T_1 + 6")W_{1-3}W_{2-4}]$
$Q2 = 12"[H - (T_1 + 6")][(W_{1-3} - 12") + W_{2-4}]$

## COMMON PIPE SIZE

| CIRCULAR PIPE | | | ARCH PIPE | | |
|---|---|---|---|---|---|
| PIPE SIZE | T | PIPE OPENING DEDUCTION ($yd^3$) | PIPE SIZE | T | PIPE OPENING DEDUCTION ($yd^3$) |
| 18" | 2½" | 0.053 | 22" × 13" | 2½" | 0.053 |
| 24" | 3" | 0.091 | 29" × 18" | 3" | 0.087 |
| 30" | 3½" | 0.138 | 36" × 23" | 3½" | 0.129 |
| 36" | 4" | 0.196 | 44" × 27" | 4" | 0.185 |
| 42" | 4½" | 0.263 | 51" × 31" | 4½" | 0.245 |
| 48" | 5" | 0.340 | 58" × 36" | 5" | 0.318 |
| 54" | 5½" | 0.427 | 65" × 40" | 5½" | 0.394 |
| 60" | 6" | 0.524 | 73" × 45" | 6" | 0.489 |
| 66" | 6½" | 0.630 | | | |
| 72" | 7" | 0.747 | | | |

GENERAL NOTES:

1. REINFORCING STEEL QUANTITIES TO BE COMPUTED FROM BAR LIST AND SHOWN ELSEWHERE ON THE PLANS.
2. QUANTITIES FOR JUNCTION BOXES SHOWN ON THE PLANS WILL BE THE BASIS FOR PAYMENT UNLESS AUTHORIZED MODIFICATIONS ARE MADE.
3. CONCRETE SHALL BE CLASS "B" AND REINFORCING STEEL SHALL BE DEFORMED BARS.
4. SIDE 1 OF THE JUNCTION BOX WILL ALWAYS BE THE OUTFLOW SIDE.
5. IF PIPES ARE SKEWED MORE THAN 15° OR IF SKEWED PIPES PRODUCE CONFLICTS WITH ANOTHER OPENING, THE PIPE SHALL BE BROKEN BACK TO THE WALL OF THE JUNCTION BOX.

| DATE | REVISION | BY |
|---|---|---|
| | | |

MISSISSIPPI DEPARTMENT OF TRANSPORTATION
ROADWAY DESIGN DIVISION
STANDARD PLAN

# JUNCTION BOX FOR PIPE CULVERTS

ENGLISH

WORKING NUMBER JB-1

ISSUE DATE: OCTOBER 1, 1998

SHEET NUMBER 302