Mississippi Department of Transportation

REQUEST FOR PROPOSALS

A DESIGN-BUILD PROJECT

Bridge Widening Project
I-55 Lincoln County, Mississippi

Project No. IM-0055-01(097)/105877301

April 21, 2010

TABLE OF CONTENTS

Page Number

I. PURPOSE OF REQUEST FOR PROPOSALS 1

II. OVERVIEW 1
Project Goals 1
Project Information 1
Current Project Cost Estimate 3
Proposal Stipend 3

III. GENERAL INSTRUCTIONS 3
Pre-Proposal Meeting 3
Questions..... 3
Proposal Submittal 4

IV. PROJECT SCOPE 4

V. PROPOSAL DEVELOPMENT 5
Volume 1 – Technical Proposal 5
Volume 2 – Contract Price Proposal 8

VI. ESCROW PROPOSAL DOCUMENTS 9

VII. EVALUATION OF PROPOSALS 9

VIII. CRITERIA FOR SCORING 9
Compliance with the RFP Requirements 9
Management Approach 9
Technical Solutions 9
Quality Management Plan 10
Schedule 10
Selection of Contractor 10

IX. GENERAL INFORMATION 11

X. MILESTONE SCHEDULE 12

The Following are Contract Documents and are available on the Project Web Site (www.GoMDOT.com):

Section 904
Section 906
Section 907
Technical Requirements
Section 905
Section 902 and Exhibits
Section 903

I. PURPOSE OF REQUEST FOR PROPOSALS

The purpose of this Request for Proposals ("RFP") is to select a Proposer to perform the Project services described in this RFP. "Proposer," as used here, includes a firm or firms, partnership, joint venture, or other legal entity, which has been requested by the Mississippi Transportation Commission ("Commission") to submit a Proposal in response to this RFP. The "CONTRACTOR", as used here, is defined as the selected Proposer with whom the Contract is executed.

The Commission is requesting a Contract Price, Best-Value Proposal. It is not the intention of the Commission to receive complete detailed Project analysis and design prior to the selection of a Proposer and the later execution of a Contract. Rather, the response to this RFP shall provide sufficient information to be evaluated in accordance with the specified process and criteria. The Proposal shall be specific enough on assumptions used in its preparation so as to provide the basis for determining a final Contract.

II. OVERVIEW

Project Goals

The following are the Commission's goals for the Project:

- Anticipated issuance of Notice to Proceed for the Contract is as specified in Section X, Milestone Schedule;
- Final Completion of all Work as documented by the Full Release of Maintenance for all Work on the Project, as soon as possible. The Target Date for completion is listed in Section X, Milestone Schedule. The Final Completion Date shall be as described in the Contractor's Schedule Certificate.
- Design and construction of reasonably maintainable, easily inspectable, long lasting bridges and roadway approaches;
- Design and construction of a Project of the highest quality that is durable;
- A safe Project for all parties involved and the public;
- A Project that is sensitive to the environment, and the community;
- A Project that is designed and built to maximize the amount of scope identified in the RFP without the Contract Price exceeding ten million dollars ($10,000,000.00).

Project Information

The bridges on I-55 in Lincoln County, as defined in the Section 904 – NTP No. 2618-D7-1 DB and the Contractor's Schedule Certificate will be widened to improve the bridges to the current roadway standards. MDOT intends to maximize the number of bridges to be improved as part of this Project.

Construction of the Project will be within Mississippi Department of Transportation (MDOT) right-of-way. The Commission will secure the Categorical Exclusion for the

construction of the Project, the US Army Corps of Engineers (USACE) Wetlands/Waters permit, and the Stormwater permit. Any additional permits required will be the responsibility of the Proposer.

Project services shall include but are not limited to:

- Design Services – complete development of construction plans
- Quality Control (QC) of design and quality control/testing of construction
- Construction Services – necessary to build and ensure high quality workmanship of the designed facility

The Project will include, as a minimum, the following bridges:

1. I-55 over Dickerson Creek, 0.9 miles north of the Pike County Line,
2. I-55 over Bogue Chitto Road, 5.1 miles north of the Pike County Line,
3. I-55 over Big Creek, 6.0 miles north of the Pike County Line, and

The Project may also include one or more of the following bridges bid in the order of priorty provided below:

4. I-55 over Brookway Blvd., 2.2 miles north of US 84, and/or
5. I-55 over Union Street, 4.6 miles north of US 84, and/or
6. I-55 over Bogue Chitto River, 0.2 miles north of US 84. and/or
7. I-55 over US 84.

The Proposers will be required to determine the maximum number of bridge locations to be widened in pairs (i.e. both the northbound and southbound bridge at each location, as described in Section 904 – NTB No. 2618-D7-1 DB for as many of the bridge locations that can be widened up to a maximum lump sum proposal price of $10 Million..

The Commission may utilize a separate Firm to provide MDOT with Project Management Assistance.

Currently, the Project is in the environmental phase for the approval of a Categorical Exclusion (CE). As Built plans of the bridges are provided to the Proposers. The Proposer shall be responsible for completing all necessary investigations, permits and design.

The submittal of a Proposal in response to this RFP, with all required signatures, shall constitute the Proposer's agreement to enter into a contract with the Commission for the completion of the Project under the terms set forth in the Contract. The terms of the Contract are not negotiable.

The Commission values a partnering approach on projects and as such this Project will require regular Partnering Sessions.

The contract for this Project contains a Disadvantaged Business Enterprise (DBE) goal of five percent (5%) of the Contract Price. The Proposer shall submit a DBE committal sheet (OCR 485) with their response to this RFP.

Current Project Cost Estimate

The maximum Contract Price is $10 Million for this Project. If the maximum proposed Contract Price is exceeded, the Proposal shall be considered non-responsive.

Proposal Stipend

A stipend in the amount of $25,000.00 will be paid to each responsive Proposer not selected as the successful Proposer. Upon acceptance of payment of the stipend, the responsive Proposer agrees that the entire Proposal shall become the exclusive property of the Commission.

III. GENERAL INSTRUCTIONS

Pre-Proposal Meeting

A mandatory pre-Proposal meeting is scheduled for the date as specified in Section X, Milestone Schedules, in the auditorium on the first floor of the MDOT Building, 401 North West Street, Jackson, MS 39201. Shortlisted Proposers are required to have a representative at the pre-Proposal meeting in order for their Proposal to be considered. The purpose of the meeting is to review the information provided in the RFP and to receive questions from the Proposers.

Questions

Proposers are encouraged to submit written questions at least two days prior to the mandatory Pre-Proposal Meeting. At the mandatory Pre-Proposal Meeting questions will be received from all representatives of the shortlisted Proposers. Written or verbal questions will be accepted at the meeting.

Only the Project Director may submit questions or request clarifications relating to the RFP after the Pre-Proposal Meeting. These inquiries must be in writing and must be received by the Commission on the date and time as specified in Section X, Milestone Schedule.

RFP questions shall be directed in writing to:

Ms. Melinda McGrath, P.E.
Mississippi Department of Transportation
Post Office Box 1850
Jackson, Mississippi 39215-1850

Or by e-mail to: I55LincolnCountyBridgeWidening@mdot.state.ms.us

The list of questions received and MDOT's written responses to these questions and any applicable addenda will be posted on the MDOT web page (www.gomdot.com). MDOT will notify the Project Director of the availability of applicable addenda via e-mail by close of business on the date as specified in Section X, Milestone Schedule or as soon as possible thereafter. Proposers are encouraged to check the website often for posting of new information.

Proposers shall not rely on any responses about the RFP except written responses to questions submitted in writing in accordance with the RFP. No requests for additional information or clarification to any other MDOT office, consultant, or employee will be considered. The Commission will not be responsible for and the Proposer shall not rely on any oral or other exchange of information that occurs outside of the official process for written questions and answers specified herein.

Proposal Submittal

Volume 1 – Technical Proposals must be received by the date and time specified in Section X, Milestone Schedule.

Deliver **ten (10)** copies of the Volume 1 Proposal, sequentially numbered on the lower right hand cover sheet from 1 to 10, and one (1) CD containing the proposals in one (1) to five (5) PDF files to:

Mr. B.B. House, P.E.
Contract Administration Engineer
Mississippi Department of Transportation
401 North West Street
P.O. Box 1850
Jackson, Mississippi 39215-1850
Phone: (601) 359-7730
Fax: (601) 359-7732

Volume 2 – Contract Price Proposal must be received by the date and time specified in Section X, Milestone Schedule.

All Responders/Proposers must visibly mark as "CONFIDENTIAL" each part of their submission that they consider to contain confidential and/or proprietary information. All submittals will be subject to disclosure in accordance with the Mississippi Public Records Act, Miss. Code Ann. § 25-61-1, *et seq.*

IV. PROJECT SCOPE

The Project Scope shall be defined in Section 904 – NTB No. 2618-D7-1 DB. (Project Scope). The Proposer shall define the number of bridges included in the Project Scope as indicated on the Contractor's Schedule Certificate.

The Proposer shall submit a proposed schedule and preliminary construction work plan demonstrating how major portions of the Work will be completed, the number of crews anticipated, shifts, length of work week only for the Work proposed to be completed. The Proposed schedule shall include a realistic date for the Final Completion of proposed Contract Work. The Proposer will be required to certify it's proposed schedule and demonstrate how it is achievable and realistic for performance of the Work.

The proposed number of calendar days submitted by the Proposer shall be used as the basis for the assessment of Liquidated Damages included in the Contract.

V. PROPOSAL DEVELOPMENT

The Commission is requesting a Contract Price, Best-Value Proposal that includes a Project schedule commitment for the scope of Work included in this RFP. The price and schedule shall be guaranteed by the Proposer for a minimum of 60 days after the date identified for submission of Contract Price Proposals in Section X. Responses to the RFP shall:

- Describe the Proposal in sufficient detail that the Commission may determine its cost of bridge locations proposed, scope and intent.
- Describe any assumptions used in developing cost and schedule components of the Proposal.
- Provide a breakdown of Project costs and assumptions used in determination by work phase (design, construction, Project management, construction management, and quality control (QC)).
- Identify the proposed schedule for implementing the Project, including the total number of calendar days from Notice to Proceed necessary to complete the Project.
- Describe assurances of timely completion of the Project.
- Describe how Project quality will be achieved.

The Proposer is solely responsible for submitting a Proposal that meets the Requirements of the RFP. Assumptions that are not in compliance with the RFP will not relieve the Proposer of the Requirements of the RFP. The submitted Proposal is evaluated for general conformance with the RFP requirements for the purpose of selecting the Best-Value Proposal. While the Proposal becomes a part of the Contract documents, the Contractor's RFC plans and designs must meet all the RFP Technical Requirements.

In order that evaluation can be accomplished efficiently, the Proposal shall be prepared in separate volumes, as applicable, in the following sequence:

Volume 1 – Technical Proposal (Marked and Sealed Separately)

The document will not be longer than 50 single-sided double-spaced 8.5 inch by 11 inch pages typed on one side only, excluding appendices. Minimum font size shall be 10 point. Proposals shall use cross-referencing to reduce repetition in explaining the proposed Project.

The Technical Proposal will contain the following information:

1. **Executive Summary**

2. **Project Scope** – Describe in detail the proposed horizontal alignment and profile including details that demonstrate Project concepts and understanding. Proposers shall submit plan sheets showing for each bridge site proposed to be completed, bridge plan and elevation, bridge sections, foundation layout and other such details in a separate appendix to the Technical Proposal. The Plan Sheets, which can be 11 inch by 17 inch in size, will not count toward the page limitation.

   Proposers shall indicate the total number of bridge pair sites that will be completed on the Contractor's Schedule Certificate, which shall be submitted with Volume 1.

3. **Management Approach** – Describe the overall approach to the Project including a construction staging plan. Management approach shall demonstrate a plan for mobilizing key personnel, equipment and materials and how the Proposer intends to ensure that these are available to meet the Project schedule. Proposer shall identify anticipated major risks and present a plan to manage those risks. Proposer shall demonstrate a plan to manage document control and sound, proven management techniques for design management, construction management, and the integration of both for this Design-Build Project. Proposer shall describe activities that will address environmental concerns.

4. **Preliminary Construction Work Plan** – Provide preliminary plan for accomplishing the proposed Work including the crews, shifts, workweeks for constructing the foundation, substructure, and superstructure. Material and equipment resources shall be addressed. Describe how the existing bridge and new portion of the bridge will be phased and the proposed plan to construct the bridge decks.

5. **Key Individuals** –Proposer shall include a copy of the organization chart provided in the Statement of Qualifications and shall state that there are no modifications to Key Individuals as submitted in the Statement of Qualifications. If personnel changes are anticipated, then Proposer shall resubmit all Key Individual information as defined in the Request for Qualifications (RFQ) and shall present a justification for the change. Any modification will require prior MDOT approval.

   Modifications to the Proposer's Team or Key Individuals and other personnel listed in the Proposer Statement of Qualifications are discouraged. MDOT will not approve requests for modification without justification. Examples of justification include death of a team member, changes in employment status, bankruptcy, inability to perform, organizational conflict of interest, or other such significant cause. In order to secure MDOT's approval prior to the award of the

contract, a written request shall be forwarded to the person and address as shown in the Section III General Instructions, Proposal Submittal of this RFP. The request shall include: a) the nature of the desired change, b) the reason for the desired change, and c) a statement of how the desired change will meet the required qualifications for the position/responsibility. No such modification will be made without prior MDOT approval.

6. **Organizational Conflict of Interest** - The Proposer's attention is directed to 23 CFR Section 636 Subpart A and in particular to Subsection 636.116 regarding organizational conflicts of interest. Subsection 636.103 defines "organizational conflict of interest" as follows:

   > Organizational conflict of interest means that because of other activities or relationships with other persons, a person is unable or potentially unable to render impartial assistance or advice to the owner, or the person's objectivity in performing the contract work is or might be otherwise impaired, or a person has an unfair competitive advantage.

   Proposer shall provide information concerning potential organizational conflicts of interest and disclose all relevant facts concerning any past, present or currently planned interests which may present an organizational conflict of interest. Proposer shall state how its interests or those of its chief executives, directors, Key Individuals for this Project, or any proposed consultant, contractor or subcontractor may result, or could be viewed as, an organizational conflict of interest.

   The Proposer is prohibited from receiving any advice or discussing any aspect relating to the Project or the procurement of the Project with any person or entity with an organizational conflict of interest, including, but not limited to URS Corporation, and any affiliates of URS Corporation. Such persons and entities are prohibited from participating in a Proposer organization relating to the Project.

   The Proposer agrees that, if after award, an organizational conflict of interest is discovered, the Proposer must make an immediate and full written disclosure to MDOT that includes a description of the action that the Proposer has taken or proposes to take to avoid or mitigate such conflicts. If an organizational conflict of interest is determined to exist, MDOT may, at its discretion, cancel the Design-Build contract for the Project. If the Proposer was aware of an organizational conflict of interest prior to the award of the contract and did not disclose the conflict to MDOT, then MDOT may terminate the contract for default.

7. **Technical Solutions** – Proposer shall describe technical solutions that offer advantages to MDOT. Such technical solutions may include items which ease construction, address schedule or budget saving techniques, improve long term durability, improve long term maintenance, or other.

8. **Quality Management Plan** – Proposer shall demonstrate the approach to quality management including design and construction quality management and the integration of both for this Design-Build Project. Proposer shall demonstrate controls that will be put in place to ensure overall quality of the design and how the Proposer will monitor conformance to the plans and material testing. Proposer shall provide how the team will resolve and document issues of non-conformance with the design, construction or material testing. The QC personnel responsible for quality control acceptance shall not be employees of the Contractor.

9. **Schedule Summary** – Proposer shall submit a summary schedule demonstrating how the Contractor plans to complete the Project within its prescribed schedule for completion. The summary schedule shall include dates for planned start and finish of design, procurement of major items, mobilization, foundation installation, superstructure installation, the total number of calendar days from the Notice to Proceed to Final Completion. The proposed number of calendar days for Final Completion shall be as shown on the Contractor's Schedule Certificate.

10. **Required Forms and Certifications** – The Proposer shall provide the following completed and/or executed documents:
    1. Contractor's Schedule Certificate.
    2. Legal Entity Forms.

    These may be placed in an appendix and will not count against the page limitation.

<u>Volume 2 – Contract Price Proposal</u> (Marked and Sealed Separately as per 907.102.09)

This Contract Price Proposal shall contain the following information:

1. All pages of Section 905 including acknowledgment of addenda and bid sheets completed and signed.
2. A certified check, cashier's check or Proposer's Bid Bond payable to the State of Mississippi in the principle amount of 5% of the bid that includes the project number, executed by the Proposer and signed or countersigned by a qualified Mississippi resident agent or qualified nonresident agent for the Surety with Power of Attorney attached.
3. An executed Equal Opportunity Clause Certification.
4. A signed list of all Firms submitting quotes (OCR-485).
5. The Certification regarding Non-Collusion, Debarment and Suspension, etc. executed in duplicate.

The information obtained under this RFP of the successful Proposer shall become the exclusive property of the Commission without restriction or limitation on its use. The Commission shall have unrestricted authority to publish, disclose, distribute, or otherwise use in whole or in part any reports, data, or other materials prepared under this RFP by the successful Proposer. The Commission shall retain ownership of all plans, specifications, and related documents.

VI. ESCROW PROPOSAL DOCUMENTS

Proposer is required to escrow all Proposal documents in accordance with Special Provision 907-103.06 within two (2) business days of Notification of Award. Failure to escrow documents in the allotted time may result in rescission of the award and/or forfeiture of the Proposer's bid bond.

VII. EVALUATION OF PROPOSALS

A Proposal Review Committee ("Committee") will be appointed to evaluate the Technical Proposals on behalf of the Commission. The Committee will be comprised of five MDOT employees. In addition, MDOT will assemble a group of advisory members, that shall include the Federal Highway Administration (FHWA), and others with various areas of expertise.

VIII. CRITERIA FOR SCORING

The Commission has developed criteria for use in evaluating and scoring the Proposals. The Committee will use these criteria to develop a numerical score of each Proposal. Scoring will be based on a point system. The Committee will evaluate the Proposals based on meeting the technical evaluation criteria as shown below.

The maximum points for each evaluation criteria will be as follows:

- Compliance with the RFP Requirements – 20
- Management Approach - 20
- Technical Solutions - 10
- Quality Management Plan – 20
- Schedule – 30

The Committee will consider the following minimum criteria:

Compliance with the RFP Requirements

- How well has the Proposer complied with the design criteria?

Management Approach

- What is the overall Project Management Organization? How will this organization be responsive to the Commission, MDOT and public concerns/issues?
- Is the overall Project Management Plan clear and concise, not overly cumbersome and easily implementable? Has this plan been used effectively elsewhere?
- How well does the Proposal address partnering and its implementation?

Technical Solutions

- Are the solutions proposed to design/construct the widened bridge and approaches based on sound principals and easily implementable?
- How well has maintenance and durability been considered in the proposed design?
- How has the Proposer considered innovative solutions for technical consideration and how effective could these innovations be?

Quality Management Plan

- What Project controls will be put in place to ensure overall Project quality (both design and construction) and how effective will these controls be?
- What assurances have been provided to verify Project quality and how effective will these assurances be?
- Does the Proposer identify and plan on utilizing an MDOT approved lab for the tests being performed?
- How effectively will non-conformance aspects of the Project be handled?

Schedule

- Does the Proposer specify the number of calendar days to complete the Project?
- How well does the Proposal contain adequate assurances that the entire Project will be completed on time?
- Does the Proposer meet or beat the Commission's desired date for completion?
- How effectively does the Proposer's schedule take into account possible hurricane evacuation impacts?
- How effectively does the Proposer clearly describe the plan for delivery of the Work?
    - How well does the Contractor demonstrate adequate resources to accomplish the Work in accordance with the Proposed Schedule?
    - How well does the Contractor specifically outline the sources for delivery of materials including the piling, beams, concrete and rebar?
    - How effective are any innovative solution proposed for the construction schedule?

The individual Technical Score by each reviewer will be the summation of the Technical Scores achieved for each of the above selection criteria. The Proposer's Total Technical Score (maximum of 100 points) will be the summation of the individual Technical Scores from each reviewer divided by the number of reviewers.

SELECTION OF CONTRACTOR

The Proposal Review Committee will score the Proposals according to the evaluation criteria. Upon approval of MDOT Executive Director and immediately prior to the opening of Volume 2, MDOT will notify each Proposer of all Technical Scores. MDOT will then publicly open each of the Contract Price Proposals, all in accordance with the Milestone Schedule.

The Best Value Proposal shall be determined by the following formula:

$$\text{Best Value Proposal} = \frac{(\text{Part A} + \text{Part B} - \text{Part C})}{[1 + (\text{Technical Score} / 100)]}$$

Where:

Part A = Contract Price Proposal.

Part B = (Number of calendar days from the Notice to Proceed up to and including Final Completion set forth by the Proposer) x $3,500.

Part C = (Number of Bridge pair sites on I-55 to be improved minus 3) x $2,000,000.

In the event of a tie for the Best Value Proposal as determined by the above formula, the Proposer with the lowest Contract Price Proposal will be selected.

The Commission intends to award and offer a Contract to the Proposer submitting the Best Value Proposal with the lowest score as determined above. However, if the parties are unable to execute a contract, MDOT may offer a contract to the Proposer that submitted the Best Value Proposal with the next lowest score, and so on, until an agreement is reached.

IX. GENERAL INFORMATION

The Commission reserves the right to terminate evaluation of one or more of the Proposals if it is determined to be in its best interest.

The Commission reserves the right, at its sole discretion, to proceed no further with this RFP process, and/or to re-advertise in another public solicitation.

The Commission reserves the right to reject any and all Proposals and/or to discontinue contract execution with any party at any time prior to final contract execution.

The Commission reserves the right to request or obtain additional information about any and all Proposals.

Except for the stipend defined in Section II, the Commission assumes no liability and will not reimburse cost incurred by firms, whether selected or not, in developing Proposals or in contract execution.

Modification to the Proposer's Team or key individuals within Teams is discouraged. MDOT will not approve requests for modification of the Proposer's Team without

justification. After award, in order to secure MDOT approval, the procedures as defined in the Technical Requirements Section 2.4 shall be followed.

The Best Value Proposer shall submit an additional 20 sets of Volume #1 proposals within 10 days after contract award.

The successful Proposer will be required to furnish a Section 903 Performance and Payment Bond, Certificates of Insurance, and W9 no later than 10 days after Contract Award.

MILESTONE SCHEDULE

• Issue RFP for selected Proposers	April 21, 2010 (Approximate Date)
• Mandatory Pre-Proposal Meeting	May 10, 2010 10 AM Central Time
• Deadline for Proposers to submit written questions	May 12, 2010 4 PM Central Time
• Target Date for MDOT to mail last responses to written questions and to issue Addenda	May 28, 2010
• Submittal of Technical Proposal (Volume 1)	June 4, 2010 4 PM Central Time
• Submittal of Contract Price Proposals (Volume 2)	June 11, 2010 10 AM Central Time
• Award	June 22, 2010
• Notice to Proceed	July 22, 2010 (Anticipated)
• Final Completion (Full Maintenance Release)	October, 2012 (Desired)

MISSISSIPPI DEPARTMENT OF TRANSPORTATION

SECTION 904 - NOTICE TO PROPOSERS NO. 1 DB **CODE: (SP)**

DATE: **03/10/2009**

SUBJECT: **Governing Specifications**

The current (2004) Edition of the Standard Specifications for Road and Bridge Construction adopted by the Mississippi Transportation Commission is made a part hereof fully and completely as if it were attached hereto, except where superseded by special provisions, or amended by revisions of the Specifications contained herein. Copies of the specification book may be purchased from the MDOT Construction Division.

A reference in any Contract Document to controlling requirements in another portion of the Contract Documents shall be understood to apply equally to any revision or amendment thereof included in the Contract.

In the event the plans or Proposal contain references to the 1990 Edition of the Standard Specifications for Road and Bridge Construction, it is to be understood that such references shall mean the comparable provisions of the 2004 Edition of the Standard Specifications.

MISSISSIPPI DEPARTMENT OF TRANSPORTATION

SECTION 904 - NOTICE TO PROPOSERS NO. 3 DB **CODE: (SP)**

DATE: **03/10/09**

SUBJECT: **Final Clean-Up**

Immediately prior to final inspection for release of maintenance, the Contractor shall pick up, load, transport and properly dispose of all litter from the entire highway right-of-way in those areas used in the construction of and maintenance of traffic of individual sites within the termini of the Project.

Litter shall include, but not be limited to, solid wastes such a glass, paper products, tires, wood products, metal, synthetic materials and other miscellaneous debris.

MISSISSIPPI DEPARTMENT OF TRANSPORTATION

SECTION 904 - NOTICE TO PROPOSERS NO. 640 DB **CODE: (SP)**

DATE: **03/10/2009**

SUBJECT: **Fiber Reinforced Concrete**

Proposers are hereby advised that synthetic structural fibers meeting the requirements of Subsection 907-711.04 may be used in lieu of wire mesh in some items of construction. Substitution of fibers for wire mesh will be allowed in the construction of paved ditches, paved flumes, paved inlet apron, driveways, guard rail anchors and pile encasements. Substitution in any other items of work must be approved by the State Construction Engineer prior to use.

SUPPLEMENT TO NOTICE TO PROPOSERS NO. 696 DB

DATE: 03/10/2009

The goal is 5 percent for the Disadvantaged Business Enterprise. The best value Proposer is required to submit Form OCR-481 for all DBEs. Proposers are advised to check the bid tabulation link for this Project on the MDOT website (http://www.gomdot.com/home/projects/designbuild/home.aspx) for results. Bid tabulations are usually posted by 3:00 pm on Letting Day.

Form OCR-481 is available at
http://www.gomdot.com/Divisions/CivilRights/Resources/Forms/pdf/MDOT_OCR481.pdf
or by calling 601-359-7466.

All OCR-481s must be returned within 10 days following the bid letting to the MDOT Office of Civil Rights, P.O. Box 1850, Jackson, MS 39215-1850.

For answers to questions, contact the MDOT Office of Civil Rights at (601) 359-7466.

MISSISSIPPI DEPARTMENT OF TRANSPORTATION

SECTION 904 - NOTICE TO PROPOSERS NO. 696 DB **CODE: (SP)**

DATE: **03/10/2009**

SUBJECT: **Disadvantaged Business Enterprises In Federal-Aid Highway Construction**

This Contract is subject to the "Safe, Accountable, Flexible, Efficient Transportation Equity Act, A Legacy For Users (SAFETEA-LU)" and applicable requirements of "Part 26, Title 49, Code of Federal Regulations." Portions of the Act are set forth in this Notice as applicable to compliance by the Contractor and all of the Act, and the MDOT DBE Program, is incorporated by reference herein.

The Department has developed a Disadvantaged Business Enterprise Program that is applicable to this Contract and is made a part thereof by reference.

Copies of the program may be obtained from:

Office of Civil Rights
Mississippi Department of Transportation
P. O. Box 1850
Jackson, Mississippi 39215-1850

POLICY

It is the policy of the Mississippi Department of Transportation to provide a level playing field, to foster equal opportunity in all federally assisted contracts, to improve the flexibility of the DBE Program, to reduce the burdens on small businesses, and to achieve that amount of participation that would be obtained in a non-discriminatory market place. In doing so, it is the policy of MDOT that there will be no discrimination in the award and performance of federally assisted contracts on the basis of race, color, sex, age, religion, national origin, or any handicap.

ASSURANCES THAT CONTRACTORS MUST TAKE:

MDOT will require that each contract which MDOT signs with a sub recipient or a Contractor, and each subcontract the Prime Contractor signs with a Subcontractor, includes the following assurances:

“The Contractor, sub recipient or Subcontractor shall not discriminate on the basis of race, color, national origin, or sex in the performance of this Contract. The Contractor shall carry out applicable requirements of 49 CFR 26 in the award and administration of federally assisted contracts. Failure by the Contractor to carry out these requirements is a material breach of this Contract, which may result in the termination of this Contract or such other remedy as MDOT deems appropriate.”

DEFINITIONS

For purposes of this provision the following definitions will apply:

"Disadvantaged Business" means a small business concern: (a) which is at least 51 percent owned by one

or more socially and economically disadvantaged individual(s) or in the case of any publicly owned business, at least 51 percent of the stock of which is owned by one or more socially and economically disadvantaged individual(s); and (b) whose management and daily business operations are controlled by one or more of the socially and economically disadvantaged individual(s) who own it. It is important to note that the business owners themselves must control the operations of the business. Absentee ownership or title ownership by an individual who does not take an active role in controlling the business is not consistent with eligibility as a DBE under CFR 49 Part 26.71.

CONTRACTOR'S OBLIGATION

The Contractor and all Subcontractors shall take all necessary and reasonable steps to ensure that DBE firms can compete for and participate in the performance of a portion of the Work in this Contract and shall not discriminate on the basis of race, color, national origin, religion or sex. Failure on the part of the Contractor to carry out the DBE requirements of this Contract constitutes a breach of Contract and after proper notification the Department may terminate the Contract or take other appropriate action as determined by the Department.

When a contract requires a zero percent (0%) DBE goal, the Contractor still has the responsibility to take all necessary and reasonable steps to ensure that DBE firms can compete for and participate in the performance of the Work in the contract. In this case, all work performed by a certified DBE firm is considered to be a “race neutral” measure and the Department will receive DBE credit towards the overall State goals when the DBE firm is paid for their work. If the Prime Contractor is a certified DBE firm, the Department can receive DBE credit only for the work performed by the Prime Contractor’s work force or any Work subcontracted to another DBE firm. Work performance by a non-DBE Subcontractor is not eligible for DBE credit.

CONTRACT GOAL

The goal for participation by DBEs is established for this Contract in the attached Supplement. The Contractor shall exercise all necessary and reasonable steps to ensure that participation is equal to or exceeds the Contract goal.

The percentage of the Contract that is proposed for DBEs shall be so stated on the last bid sheet of the Proposal.

The apparent best value responsive Proposer shall submit to the Contract Administration Division Form OCR-481, signed by the Prime Contractor and the DBE Subcontractors, no later than the 10th day after opening of the Proposals.

FORMS ARE AVAILABLE FROM THE CONTRACT ADMINISTRATION DIVISION

The OCR-481 Form must contain the following information:

The name and address of each certified DBE Contractor / Supplier;

The Reference Number, percent of Work and the dollar amount of each item. If a portion of an item is subcontracted, a breakdown of that item including quantities and unit price must be attached, detailing what part of the item the DBE firm is to perform and who will perform the remainder of the item.

If the DBE Commitment shown on the last proposal sheet of the Proposal does not equal or exceed the

Contract goal, the Proposer must submit, with the Proposal, information to satisfy the Department that adequate good faith efforts have been made to meet the Contract goal.

Failure of the best value Proposer to furnish acceptable proof of good faith efforts, submitted with the Proposal, shall be just cause for rejection of the Proposal. Award may then be made to the next best value responsive Proposer or the Work may be re-advertised.

The following factors are illustrative of matters the Department will consider in judging whether or not the Proposer has made adequate good faith effort to satisfy the Contract goal.

1. Whether the Proposer attended the pre-proposal meeting that was scheduled by the Department to inform DBEs of subcontracting opportunities;

2. whether the Proposer advertised in general circulation, trade association, and minority-focus media concerning the subcontracting opportunities;

3. whether the Proposer provided written notice to a reasonable number of specific DBEs that their interest in the Contract is being solicited;

4. whether the Proposer followed up initial solicitations of interest by contacting DBEs to determine with certainty whether they were interested;

5. whether the Proposer selected portions of the Work to be performed by DBEs in order to increase the likelihood of meeting the Contract goal;

6. whether the Proposer provided interested DBEs with adequate information about the plans, specifications and requirements of the Contract;

7. whether the Proposer negotiated in good faith with interested DBEs and did not reject them as unqualified without sound reasons based on a thorough investigation of their capabilities; and

8. whether the Proposer made efforts to assist interested DBEs in obtaining any required bonding or insurance.

DIRECTORY

Included with this Bid Proposal is a list of "Certified DBE Contractors" which have been certified as such by the Mississippi Department of Transportation and other Unified Certification Partners (UCP).

The DBE firm must be on the Department's list of "Certified DBE Contractors" that is attached to this Proposal and approved by MDOT to count towards meeting the DBE goal.

REPLACEMENT

If a DBE Subcontractor cannot perform satisfactorily, and this causes the OCR-481 commitment to fall below the Contract goal, the Contractor shall take all necessary reasonable steps to replace the DBE with another certified DBE Subcontractor or submit information to satisfy the Mississippi Department of Transportation that adequate good faith efforts have been made to replace the DBE. The replacement DBE must be a DBE who was on the Department's list of "Certified DBE Contractors" when the job was

awarded, and who is still active. All DBE replacements must be approved by the Department.

Under no circumstances shall the Prime or any Subcontractor perform the DBE's work (as shown on the OCR-481) without prior written approval from the Department. See "Sanctions" at the end of this document for penalties for performing DBE's work.

When a Contractor proposes to substitute/replace/terminate a DBE that was originally named on the OCR-481, the Contractor must obtain a release, in writing, from the named DBE explaining why the DBE Subcontractor cannot perform the work. A copy of the original DBE's release must be attached to the Contractor's written request to substitute/replace/terminate along with appropriate Subcontract Forms for the substitute/replacement/terminated Subcontractor, all of which must be submitted to the DBE Coordinator and approved, in advance, by MDOT.

GOOD FAITH EFFORTS

To demonstrate good faith efforts to replace any DBE that is unable to perform successfully, the Contractor must document steps taken to subcontract with another certified DBE Contractor. Such documentation shall include no less than the following:

(a) Proof of written notification to certified DBE Contractors by certified mail that their interest is solicited in subcontracting the Work defaulted by the previous DBE or in subcontracting other items of work in the Contract.

(b) Efforts to negotiate with certified DBE Contractors for specific items shall include as a minimum:

a. The name, address, and telephone number of each DBE contacted;

b. A description of the information provided about the plans and specifications for those portions of the Work to be subcontracted; and

c. A statement of why agreements were not reached.

(c) For each DBE contacted that was rejected as unqualified, the reasons for such conclusion.

(d) Efforts made to assist each DBE that needed assistance in obtaining bonding or insurance required by the Contractor.

Failure of the Contractor to demonstrate good faith efforts to replace a DBE Subcontractor that cannot perform as intended with another DBE Subcontractor, when required, shall be a breach of Contract and may be just cause to be disqualified from further bidding for a period of up to 12 months after notification by certified mail.

PARTICIPATION / DBE CREDIT

Participation shall be counted toward meeting the goal in this Contract as follows:

1. If the Prime Contractor is a certified DBE firm, only the value of the Work actually performed by the DBE Prime can be counted towards the Project goal, along with any Work subcontracted to a certified DBE firm.

2. If the Contractor is not a DBE, the Work subcontracted to a certified DBE Contractor will be counted toward the goal.

3. The Contractor may count toward the goal a portion of the total dollar value of a contract with a joint venture eligible under the standards of this provision equal to the percentage of the DBE partner in the joint venture.

4. Expenditures to DBEs that perform a commercially useful function may be counted toward the goal. A business is considered to perform a commercially useful function when it is responsible for the execution of a distinct element of the Work and carries out its responsibilities by actually performing, managing, and supervising the work involved.

5. The Contractor may count 100% of the expenditures for materials and supplies obtained from certified DBE suppliers and manufacturers that produce goods from raw materials or substantially alters them for resale provided the suppliers and manufacturers assume the actual and contractual responsibility for the provision of the materials and supplies. The Contractor may count 60 percent of the expenditures to suppliers that are not manufacturers, provided the supplier performs a commercially useful function in the supply process. Within 30 days after receipt of the materials, the Contractor shall furnish to the DBE Coordinator invoices from the certified supplier to verify the DBE goal.

6. Any Work that a certified DBE firm subcontracts or sub-subcontracts to a non-DBE firm will not count towards the DBE goal.

7. Only the dollars actually paid to the DBE firm may be counted towards the DBE goal.

AWARD

Award of this Contract to the best value Proposer will be contingent upon the following conditions:

1. Concurrence from Federal Highway Administration, when applicable.

2. Proposer must submit to the Contract Administration Division for approval, Form OCR-481 (DBE Commitment) no later than the 10th day after opening of the proposals, or submit information with the bid Proposal to satisfy the Department and that adequate good faith efforts have been made to meet the Contract goal.

3. Proposer must submit **with the bid Proposal** a list of all firms that submitted quotes for material supplies or items to be subcontracted. This information must be submitted on form OCR-485 in the back of the Contract Proposal.

Prior to the start of any work, the Proposer must notify the Project Engineer, in writing, of the name of

the designated "DBE Liaison Officer" for this Project. This notification must be posted on the bulletin board at the Project site.

DEFAULT

The Contract goal established by MDOT in this Proposal must be met to fulfill the terms of the Contract. The Contractor may list DBE Subcontractors and items that exceed MDOT's Contract Goal, but should unforeseen problems arise that would prevent a DBE from completing its total commitment percentage, the Contractor will meet the terms of the Contract as long as it meets or exceeds MDOT's Contract Goal. For additional information, refer to "Replacement" section of this Notice.

DBE REPORTS

1. (1) OCR-481: Refer to "CONTRACT GOAL" section of this Notice to Proposers for information regarding this form.

2. (2) OCR-482: At the conclusion of the Project the Contractor will submit to the Project Engineer for verification of quantities and further handling Form OCR-482 whereby the Contractor certifies to the amounts of payments made to each Contractor / Supplier. The Project Engineer shall submit the completed Form OCR-482 to the DBE Coordinator (Office of Civil Rights). Final acceptance of the Project is dependent upon Contract Administration Division's receipt of completed Form OCR-482 which they will receive from the Office of Civil Rights.

3. (3) OCR-483: The Project Engineer/Inspector will complete Form OCR-483, the Commercially Useful Function (CUF) Performance Report, in accordance with MDOT S.O.P. No. OCR-03-09-01-483. Evaluations reported on this form are used to determine whether or not the DBE firm is performing a CUF. The Prime Contractor should take corrective action when the report contains any negative evaluations. DBE credit may be disallowed and/or other sanctions imposed if it is determined the DBE firm is not performing a CUF. This form should also be completed and returned to the DBE Coordinator (Office of Civil Rights).

4. (4) OCR-484: Each month, the Contractor will submit to the Project Engineer OCR-484 certifying payments to all Subcontractors.

5. (5) OCR-485: The Proposer must submit **with the bid Proposal** a list of all firms that submitted quotes for material supplies or items to be subcontracted.

6. (6) OCR-487: Only used by Prime Contractors that are certified DBE firms. This form is used in determining the exact percentage of DBE credit for the specified project. It should be returned to MDOT with the OCR-481 form, or can also be returned with the Permission to Subcontract Forms (CAD-720 or CAD-725).

SANCTIONS

The Department has the option to enforce any of the following penalties for failure of the Prime Contractor to fulfill the DBE goal as stated on the OCR-481 form or any violations of the DBE program guidelines:

1. Disallow credit towards the DBE goal

2. Withhold progress estimate payments

3. Deduct from the final estimate an amount equal to the unmet portion of the DBE goal

4. Recover an amount equal to the unmet Contract goal

5. Debar the Contractor involved from bidding on Mississippi Department of Transportation projects.

6. Deduct from the Contractor's final estimate all or any combination of the following.

Offense	Percentage of the monetary amount disallowed from (1) above	Lump Sum
# 1	10%	$ 5,000 or both
# 2	20%	$ 10,000 or both
# 3	40%	$ 20,000 & debarment

MISSISSIPPI DEPARTMENT OF TRANSPORTATION

SECTION 904 - NOTICE TO PROPOSERS NO. 786 DB **CODE: (SP)**

DATE: **03/10/2009**

SUBJECT: **Cost Adjustment Factors**

This Contract DOES NOT have an adjustment code for adjustments in the cost of fuel or materials. Therefore, NO adjustment for changes in the cost of fuel or materials will be allowed on items of work in this Project.

MISSISSIPPI DEPARTMENT OF TRANSPORTATION

SECTION 904 - NOTICE TO PROPOSERS NO. 824 DB **CODE: (SP)**

DATE: 03/10/2009

SUBJECT: Lane Closure Restrictions

Proposers are hereby advised that:

1. All interstate roadways and ramps are to remain open to traffic at all times.
2. **Temporary lane closures shall <u>NOT</u> be permitted during mandatory hurricane evacuation orders. Also no lane closures will be permitted on the following holidays or the day preceding them: New Year's Day, Independence Day, Labor Day, Memorial Day, Thanksgiving, and Christmas Day. In the event one of the aforementioned holidays fall during the weekend or on a Monday, no lane closure will be allowed during that weekend or the Friday immediately preceding said holiday.**
3. The maximum allowable lane closure length shall be limited to three miles.
4. Work zones in the same lane shall be spaced no closer than two miles. Work zones in adjacent lanes shall be spaced no closer than three miles.
5. Work requiring a lane closure shall begin within the limits of the closure within one hour of the closure set-up. If the Contractor fails to begin work within the one hour limit, the Resident Engineer, or designee may direct the Contractor to remove the lane closure and open the lane to traffic.
6. Barrels may used to delineate pavement drop-offs if used according to MDOT's Special Design Drawing TCP-SC.
7. Portable Changeable Message Signs shall be required on I-55 for advance motorist warning of road work a minimum of two miles ahead of the Work on I-55. These Changeable Message Signs are to remain in place until traffic is placed in its final phase location. These Changeable Message Signs may be used to alert motorist of changing traffic conditions.
8. A Portable Changeable Message Sign shall be required for advance motorist warning of road work a minimum of two miles ahead of a lane closure. If lane closures are located within 6 miles of each other, placement of an advance portable changeable message sign is required only in advance of the first closure site.
9. The criteria for the Portable Changeable Message Sign shall comply with Part VI of the Manual on Uniform Traffic Control Devices (MUTCD) and Special Provision No. 907-619 DB Changeable Message Signs, with exclusion of cellular programming capabilities.
10. At the Engineer's discretion, additional advanced warning signs shall be placed at 1 mile intervals prior to the designated work zone(s), as warranted by traffic conditions.

MISSISSIPPI DEPARTMENT OF TRANSPORTATION

SECTION 904 - NOTICE TO PROPOSERS NO. 845 DB **CODE: (SP)**

DATE: **03/10/2009**

SUBJECT: **Removal and Disposal of any Structures Having lead, Lead-Based Paint and/or Asbestos**

Removal and disposal of any structures, having lead, lead-based paint, and/or asbestos shall be in accordance with MDEQ & EPA guidelines. The removed materials shall be handled and deposited in a suitable upland site designated for such material(s).

MISSISSIPPI DEPARTMENT OF TRANSPORTATION

SECTION 904 - NOTICE TO PROPOSERS NO. 883 DB **CODE: (SP)**

DATE: **03/10/2009**

SUBJECT: **Payroll Requirements**

Proposers are hereby advised that the Contractor and Subcontractor(s) are required to submit payroll information to the Project Engineers on a weekly basis.

On Federal-Aid Projects, CAD-880, CAD-881 and certified payroll submissions are required each week the Contractor or a Subcontractor performs work on the Project. This is addressed in Section V, page 6 of Form FHWA-1273.

On State-Funded Projects, CAD-880 is required each week the Contractor or a Subcontractor performs work on the Project.

When no work is performed on either Federal-Aid or State-Funded Projects, the Contractor should only submit CAD-880 showing no work activities.

The Contractor shall make all efforts necessary to submit this information to the Project Engineer in a timely manner. The Engineer will have the authority to suspend the Work wholly or in part and to withhold payments because of the Contractor's failure to submit the required information. Submission of forms and payrolls shall be current through the first full week of the month for the estimate period in order for the Project Engineer to process an estimate.

Proposers are advised to review the requirements regarding payroll submissions in Section 110 of the Standard Specifications.

MISSISSIPPI DEPARTMENT OF TRANSPORTATION

SECTION 904 - NOTICE TO PROPOSERS NO. 1197 DB **CODE: (SP)**

DATE: **03/10/2009**

SUBJECT: **Severe High Sulfate Areas Below Ground Level**

Proposers are hereby advised that this Project, or portions of this Project, is located in areas considered to be High Sulfate Areas and will require certain restrictions on the tricalcium aluminate content of the Portland cement portion of cementitious materials and sources of fly ash used for replacement of Portland cement. A geotechnical investigation has indicated the presence of high sulfate soils below the ground surface. Therefore, the cement/fly ash used in concrete mixtures for the construction of certain items of work below ground level shall not exceed eight percent (8%) tricalcium aluminate as addressed in Subsection 907-701.02 for severe sulfate exposure.

Sub-surface items of work requiring restrictions on tricalcium aluminate for this Project are as follows:

1) Drilled Shafts
2) Piles

No other restrictions as to maximum tricalcium aluminate content or source of fly ash used for cement replacement shall apply to concrete items or structures, other than listed above.

MISSISSIPPI DEPARTMENT OF TRANSPORTATION

SECTION 904 - NOTICE TO PROPOSERS NO. 1199 DB **CODE: (SP)**

DATE: **03/10/2009**

SUBJECT: **Severe High Sulfate Areas**

Proposers are hereby advised that this Project, or portions of this Project, is located in areas considered to be High Sulfate Areas and will require restrictions on the tricalcium aluminate content of the Portland cement portion of cementitious materials and sources of fly ash used for replacement of Portland cement. With the exception of prestressed structure members, concrete pipe, concrete posts, bridge decks, intermediate caps, rails and curbs, cement/fly ash used in concrete mixtures shall not exceed eight percent (8%) tricalcium aluminate as addressed in Subsection 907-701.02 for severe sulfate exposure.

MISSISSIPPI DEPARTMENT OF TRANSPORTATION

SECTION 904 - NOTICE TO PROPOSERS NO. 1405 DB **CODE: (SP)**

DATE: **03/10/2009**

SUBJECT: **Errata And Modifications To The 2004 Standard Specifications**

Page	Subsection	Change
101	201.01	In the second sentence of the first paragraph, change “salvable” to “salvageable”.
107	202.04	In the fourth sentence of the fourth paragraph, change “yard” to “feet”.
107	202.05	In the list of units measurements for 202-B, add “square foot”.
132	211.03.4	In the second sentence of the second paragraph, change “planted” to “plated”.
192	306.02.4	In the first line of the first paragraph, delete the word “be”.
200	307.03.7	In the fourth sentence of the second paragraph, change “lime-fly ash” to “treated”.
236	401.01	Change the header from “Section 403” to “Section 401”.
242	401.02.3.2	In the first sentence of the third full paragraph, add “1/8” in the blank before the inch mark.
250	401.02.6.3	In the second sentence of the first paragraph on page 250, change “rutting over ” ” to “rutting over 1/8" ”.
253	401.02.6.4.2	In the paragraph preceding the table, change “91.0” to “89.0”.
259	401.03.1.4	In the first paragraph, change “92.0 percent” to “the specified percentage (92.0 or 93.0)”.
269	403.03.2	In the table at the top of page 269, change the PI requirement from “ = ” to “ $\leq$ ”.
278	404.04	In the second sentence, change the subsection from “401.04” to “403.04”.
283	409.02.2	Change “PG 64-22” to “PG 67-22”.
294	413.02	In the first sentence of the second paragraph, change “707.02.1.3” to “Subsection 707.02.1.3”.
340	511.04	In the second sentence of the second paragraph, change “412” to “512”.

349	601.03.3	In the first sentence, change “804.03.2” to “804.03.5”.
355	603.02	Change the subsection reference for Joint mortar from “707.03” to “714.11”.
369	604.04	In the first sentence, change “601.04” to “Subsection 601.04”.
427	619.04	Delete the second paragraph.
442	625.04	In the third paragraph, change “626.04” to “Subsection 626.04”.
444	626.03.1.2	Delete the third sentence of the first paragraph.
464	631.02	Change the subsection reference for Water from “714.01.0” to “714.01.1”.
570	682.03	Change the subsection number from “682-03” to “682.03”.
575	683.10.4	Change the subsection number from “683.10.4” to “683.04”.
575	683.10.5	Change the subsection number from “683.10.5” to “683.05”.
596	701.02	In the table under the column titled “Cementations material required”, change Class F, FA” to “Class F FA,”.
603	702.11	In the first sentence, change “702.12” to “Subsection 702.12”.
612	703.04.2	In the fifth paragraph, delete “Subsection 703.11 and”.
616	703.07.2	In the Percentage By Weight Passing Square Mesh Sieves table, change the No. 10 requirement for Class 7 material from “30 - 10” to “30 - 100”.
618	703.13.1	In the first sentence of the first paragraph, change “703.09” to “703.06”.
618	703.13.2	In the first sentence, change “703.09” to “703.06”.
671	712.06.2.2	In the first sentence, change “712.05.1” to “Subsection 712.05.1”.
689	714.11.2	In the first sentence, change “412” to “512”.
709	715.09.5	In the first sentence of the first paragraph, change “guage” to “gauge”.
717	717.02.3.4	In the top line of the tension table, change “1 1/2” to “1 1/8” and change “1 1/8” to “1 1/2”.
741	720.05.2.2	In the last sentence of this subsection, change “720.05.2.1” to “Subsection 720.05.2.1”.
827	803.03.2.3.7.5.2	In the first sentence of the second paragraph, change “803.03.5.4” to “803.03.2.3.4”.

833	803.03.2.6	In the first sentence, change “803.03.7” to “803.03.2.5”.
854	804.02.11	In the last sentence of the first paragraph, change “automatically” to “automatic”.
859	804.02.13.1.3	In the last sentence, change Subsection “804.02.12.1” to “804.02.12”.
879	804.03.19.3.2	In the first sentence of the third paragraph, change “listed on of Approved” to “listed on the Approved”.
879	804.03.19.3.2	In the last sentence of the last paragraph, change “804.03.19.3.1” to “Subsection 804.03.19.3.1”.
962	814.02.3	In the first sentence, change “710.03” to “Subsection 710.03”.
976	820.03.2.1	In the first sentence, change “803.02.6” to “803.03.1.7”.
976	820.03.2.2	In the first sentence, change “803.03.9.6” to “803.03.1.9.2”.
985	Index	Change the subsection reference for Petroleum Asphalt Cement from “702.5” to “702.05”.
985	Index	Change the subsection reference for the Definition of Asphaltic Cement or Petroleum Asphalt from “700.2” to “700.02”.
985	Index	Change the subsection reference for Automatic Batchers from “501.03.2.4” to “804.02.10.4”.
986	Index	Delete “501.03.2” as a subsection reference for Batching Plant & Equipment.
988	Index	Change the subsection reference for the Central Mixed Concrete from “501.03.3.2” to “804.02.11”.
988	Index	Change the subsection reference for the Concrete Batching Plant & Equipment from “501.03.2” to “804.02.11”.
999	Index	Delete “501.03.3.3” as a subsection reference for Truck Mixers.
1001	Index	Change the subsection reference for Edge Drain Pipes from “605.3.5” to “605.03.5”.
1002	Index	Change the subsection reference for Metal Posts from “713.05.2” to “712.05.2”.
1007	Index	Change the subsection reference for Coarse Aggregate of Cement Concrete Table from “703.3” to “703.03”.
1007	Index	Change the subsection reference for Composite Gradation for Mechanically Stabilized Courses Table from “703.8” to “703.08”.

1009	Index	Delete “501.03.3.3” as a subsection reference for Truck Mixers and Truck Agitators.
1010	Index	Delete reference to “Working Day, Definition of”.

MISSISSIPPI DEPARTMENT OF TRANSPORTATION

SECTION 904 - NOTICE TO PROPOSERS NO. 1808 DB **CODE: (IS)**

DATE: **09/09/2008**

SUBJECT: **Safety Apparel**

Bidders are advised that the Code of Federal Regulations CFR 23 Part 634 final rule was adopted November 24, 2006 with an effective date of November 24, 2008. This rule requires that **"All workers within the right-of-way of a Federal-Aid Highway who are exposed either to traffic (vehicles using the highway for the purposes of travel) or to construction equipment within the work area shall wear high-visibility safety apparel"**. High-visibility safety apparel is defined in the CFR as **"personnel protective safety clothing that is intended to provide conspicuity during both daytime and nighttime usage, and that meets the Performance Class 2 or 3 requirements of the ANSI/ISEA 107-2004 publication entitled American National Standard for High-Visibility Safety Apparel and Headwear"**. All workers on Mississippi State Highway right-of-way shall comply with this Federal Regulation. Workers are defined by the CFR as **"people on foot whose duties place them within the right-of way of a Federal-Aid Highway, such as highway construction and maintenance forces, survey crews, utility crews, responders to incidents within the highway right-of-way, and law enforcement personnel when directing traffic, investigating crashes, and handling lane closures, obstructed roadways, and disasters within the right-of-way of a Federal-Aid Highway"**.

You can access this final rule at the following link:
http://a257.g.akamaitech.net/7/257/2422/01jan20061800/edocket.access.gpo.gov/2006/pdf/E6-19910.pdf

MISSISSIPPI DEPARTMENT OF TRANSPORTATION

SECTION 904 - NOTICE TO PROPOSERS NO. 1918 DB **CODE: (SP)**

DATE: **03/10/2009**

SUBJECT: **DBE Forms, Participation and Payment**

Proposers are hereby advised that the participation of a DBE Firm can not be counted towards the Prime Contractor's DBE goal until the amount being counted towards the goal has been paid to the DBE.

Form OCR-482 has been developed to comply with this requirement. Proposers are hereby advised that at the end of the job, the Prime Contractor will submit this form to the Project Engineer before the final estimate is paid and the Project is closed out. This form certifies payments to all DBE Subcontractors over the life of the Contract.

Form OCR-484 has also been developed to comply with this requirement. Proposers are hereby advised that each month, the Prime Contractors will submit this form to the Project Engineer no later than the 20th of each month. This form certifies payments to all Subcontractors and shows all firms even if the Prime Contractor has paid no monies to the firm during that estimate period (negative report). The Project Engineer will attach this form to the monthly estimate before forwarding the estimate to the Contract Administration Division for processing.

Proposers are also advised that Form OCR-485 will be completed by **ALL PROPOSERS** submitting a bid Proposal and **must be signed and included in the Proposal package**. Failure to include Form OCR-485 in the Proposal package will cause the Contractor's Proposal to be considered **irregular**.

DBE Forms, including Forms OCR-482, OCR-484 and OCR-485, can be obtained from the Office of Civil Rights Division, MDOT Administration Building, 401 North West Street, Jackson, MS, or at www.gomdot.com under *Business, Disadvantaged Enterprise, Applications.*

MISSISSIPPI DEPARTMENT OF TRANSPORTATION

SECTION 904 - NOTICE TO PROPOSERS NO. 1922 DB **CODE: (SP)**

DATE: **03/10/2009**

SUBJECT: **Quality Control / Quality Assurance Concrete**

Proposers are advised that work performed under the following sections of the specifications will not be sampled and tested based on the Quality Control / Quality Assurance (QC/QA) requirements of Section 804 of the specifications. The Contractor is required to submit mix designs to accomplish this work in accordance with Section 804 and perform normal Quality Control functions at the concrete plant. Sampling and testing will be in accordance with the requirements of 907-601, Structural Concrete, and TMD-20-04-00-000.

Sections	Description
221	Paved Ditches
601	Structural Concrete, Minor Structures - manholes, inlets, catch basins, junction boxes, pipe headwalls, and pipe collars.
606	Guardrail Anchors
607	Fence Post Footings
608	Sidewalks
609	Curb and Gutter
614	Driveways
616	Median and Island Pavement
630	Sign Footings, except Overhead Sign Supports

MISSISSIPPI DEPARTMENT OF TRANSPORTATION

SECTION 904 - NOTICE TO PROPOSERS NO. 1928 DB **CODE: (SP)**

DATE: 03/10/2009

SUBJECT: Federal Bridge Formula

Proposers are hereby advised that Federal Highway Administration Publication No. FHWA-MC-94-007, **BRIDGE FORMULA WEIGHTS**, dated January 1994, is made a part of this Contract when applicable.

Prior to the preconstruction conference, the Contractor shall advise the Engineer, in writing, what materials, if any, will be delivered to the jobsite via Interstate route(s).

Copies of the **BRIDGE FORMULA WEIGHTS** publication may be obtained by contacting:

Federal Highway Administration
400 7th Street, SW
Washington, DC 20590
(202) 366-2212

or

http://ops.fhwa.dot.gov/freight/sw/brdgcalc/calc_page.htm

MISSISSIPPI DEPARTMENT OF TRANSPORTATION

SECTION 904 - NOTICE TO PROPOSERS NO. 2239 DB **CODE: (SP)**

DATE: **01/06/2009**

SUBJECT: **Department of Labor Ruling**

On December 19, 2008 the U.S. Department of Labor issued a final rule revising their regulations in 29 CFR Parts 3 and 5. This rule takes effect for all Federal funded contracts awarded after January 19, 2009.

The primary change in the rule is a provision that requires Contractors to limit the amount of personal information on the weekly payroll submissions. Personal addresses and full social security numbers may no longer be used. Contractors must use an " . . . individually identifying number for each employee (e.g., the last four digits of the employee's social security number)." Form FHWA-1273 - "Required Contract Provisions Federal-aid Construction Contracts" will eventually be revised to reflect this change.

Until the revised is made to FHWA-1273, bidders are advised to disregard any requirement in FHWA-1273 regarding the use of personal addresses and full social security numbers, such as in Section V, Paragraph 2b.

Bidders are also advised that the requirement for maintaining and submitting form FHWA-47, as referenced in FHWA-1273 Section VI, is no longer required on construction projects.

MISSISSIPPI DEPARTMENT OF TRANSPORTATION

SECTION 904 - NOTICE TO PROPOSERS NO. 2382 DB **CODE: (SP)**

DATE: **03/29/2010**

SUBJECT: **Status of Right of Way and Utility Adjustments**

Although it is desirable to have completed all utility adjustments and work to be performed by others prior to receiving Proposals, sometimes it is not considered to be in the public interest to wait until each and every such clearance has been obtained. The Proposer is hereby advised of possible utilities which have not been discovered and/or relocated.

The status of encroachments and utility adjustments are set forth in following attachments.

Melinda L. McGrath
Deputy Executive Director/
Chief Engineer

Brenda Znachko
Deputy Executive Director/
Administration

MISSISSIPPI DEPARTMENT OF TRANSPORTATION

Larry L. "Butch" Brown
Executive Director

Steven K. Edwards
Director
Office of Intermodal Planning

Willie Huff
Director
Office of Enforcement

P. O. Box 1850 / Jackson, Mississippi 39215-1850 / Telephone (601) 359-7001 / FAX (601) 359-7110 / GoMDOT.com

April 21, 2010

Mr. Andrew Hughes
Division Administrator
Federal Highway Administration
666 North Street, Suite 105
Jackson, MS 39205

RE: IM-0055-01(097)
105877-301000
Lincoln County

Dear Mr. Hughes:

RIGHT-OF-WAY CERTIFICATION

This project will be construction on existing highway right of way delineated on plans for previous State and Federal Aid Projects on file in offices of the Department of Transportation in Jackson. Since no additional right of way is required, there are no relocatees, improvements or Potentially Contaminated Sites involved in this project.

Attached:
Status of Right of Way
Status of Hazardous Waste Site
Encroachment Certification
Utility Certification

Very truly yours,

RIGHT OF WAY DIVISION

Timmie L. Cooper
Assistant Division Administrator

TLC:cew

Pc: Chief Engineer
Assistant Division Administrator
Contract Administration
Construction Engineer
District Seven
Project Engineer
Facility & Records Management

STATUS OF RIGHT-OF-WAY
IM-0055-01(097)
105877-301000
LINCOLN COUNTY
April 21, 2010

All rights of way and legal rights of entry have been acquired **except:**

NONE.

STATUS OF POTENTIALLY CONTAMINATED SITES
IM-0055-01(097))
105877-301000
Lincoln County
March 16, 2010

THERE IS NO RIGHT OF WAY REQUIRED FOR THIS PROJECT. NO INITIAL SITE ASSESSMENT WILL BE PERFORMED. IF CONTAMINATION ON EXISTING RIGHT OF WAY IS DISCOVERED, IT WILL BE HANDLED BY THE DEPARTMENT.

RECEIVED
MAR 16 2010
EMINENT DOMAIN

MISSISSIPPI DEPARTMENT OF TRANSPORTATION

Inter-Departmental Memorandum

TO: Clara Woods
Right-Of-Way Division (84-01)

DATE: 4/20/2010

FROM: Gregory L. Wilkinson GLW
District 7 Preconstruction Engineer (17-01)

SUBJECT OR PROJECT NO: IM-0055-01(097)/105877
I55

INFORMATION COPY TO:
Preconstruction File
Central File
District Seven (Mr. Broome & Mr. Morris)
District Seven (Ms. Willis)

COUNTY: Lincoln

I have inspected the above referenced project and find no noticeable encroachments.

If any other information is required, please advise.

RECEIVED
APR 20 2010
EMINENT DOMAIN

MISSISSIPPI DEPARTMENT OF TRANSPORTATION

Inter-Departmental Memorandum

TO: Clara Woods
Right-Of-Way Division (84-01)

DATE: 4/20/2010

FROM: Gregory L. Wilkinson GLW
District 7 Preconstruction Engineer (17-01)

SUBJECT OR PROJECT NO: IM-0055-01(097)/105877
I55

INFORMATION COPY TO:
Preconstruction File
Central File
District Seven (Mr. Broome & Mr. Morris)
District Seven (Ms. Willis)
Construction Division (Mr. Hall)

COUNTY: Lincoln

This letter is to certify that all of the work will be performed within the existing right-of-way and there are no utility conflicts on the above referenced project.

If any additional information is required, please advise.

RECEIVED
APR 2 0 2010
EMINENT DOMAIN

ASBESTOS CONTAMINATION STATUS OF BUILDINGS
TO BE REMOVED BY THE CONTRACTOR
IM-0055-01(097)
105877-301000
Lincoln County
March 16, 2010

Reference is made to notices to bidders entitled "Asbestos National Emission Standards for Hazardous Air Pollutants (NESHAP)" and "Removal of Obstructions".

The following pertinent information is furnished concerning asbestos containing materials (ACMs), if any, found in buildings to be removed by the Contractor.

There is no Right of Way required for this project. There are no buildings to be removed by the contractor.

RECEIVED
MAR 16 2010
EMINENT DOMAIN

MISSISSIPPI DEPARTMENT OF TRANSPORTATION

SECTION 904 - NOTICE TO PROPOSERS NO. 2383 DB **CODE: (SP)**

DATE: 03/10/2009

SUBJECT: Federal Aviation Administration (FAA) Permit Required

Proposers are advised that a permit may be required from the FAA for the construction of the Project. It shall be the Contractor's responsibility to obtain the permit. The cost and time for obtaining the permit should be included in the Contract Price and Contract Time submitted in the Proposal. No additional monies or time extension will be granted due to delays in obtaining the permit.

The following sites may require a permit from the FAA depending on the height of cranes and piledrivers as these sites are within 20,000 feet of an existing airport:

1. I-55 at Brookway Blvd. – 2.2 miles north of US 84
2. I-55 at Union Street – 4.6 miles north of US 84

MISSISSIPPI DEPARTMENT OF TRANSPORTATION

SECTION 904 - NOTICE TO PROPOSERS NO. 2618-D7-1 DB

DATE: **3/29/2010**

SUBJECT: **Project Scope**

PROJECT: **Design-Build Widening of Bridges on I-55 in Lincoln County**
Project No. IM-0055-01(097)/105877301

Work on the project shall consist of the following:

The bridges on I-55 in Lincoln County will be widened to improve the bridges to the current roadway standards. MDOT intends to maximize the number of bridges to be improved as part of this Project. The bridge locations that shall be part of this Project include:

1. I-55 over Dickerson Creek, 0.9 miles north of Pike County Line,
2. I-55 over Bogue Chitto Road, 5.1 miles north of Pike County Line,
3. I-55 over Big Creek, 6.0 miles north of Pike County Line, and

(Note: each location includes both northbound and southbound bridges)

The Project may also include one or more of the following bridges (both northbound and southbound) bid in the priority order shown below:

4. I-55 over Brookway Blvd., 2.2 miles north of US 84, and/or
5. I-55 over Union Street, 4.6 miles north of US 84, and/or
6. I-55 over Bogue Chitto River, 0.2 miles north of US 84. and/or
7. I-55 over US 84.

The station limits for each of the bridge sites are as follows:

Bridge Location	Begin Station	End Station
I-55 over Dickerson Creek LT	59+25	65+95
I-55 over Dickerson Creek RT	56+15	62+85
I-55 over Bogue Chitto Road LT	301+50	308+75
I-55 over Bogue Chitto Road RT	299+10	306+40
I-55 over Big Creek LT	348+10	356+20
I-55 over Big Creek RT	345+00	353+10
I-55 over US 84 LT	728+55	737+00
I-55 over US 84 RT	726+30	734+70
I-55 over Bogue Chitto River LT	744+00	752+70
I-55 over Bogue Chitto River RT	740+70	749+40
I-55 over Brookway Blvd LT	863+55	871+75

Bridge Location	Begin Station	End Station
I-55 over Brookway Blvd RT	861+00	869+20
I-55 over Union Street LT	960+65	968+90
I-55 over Union Street RT	956+85	965+10

The Project shall include those bridges listed on the Contractor's Schedule Certificate, made a part of this Project by reference.

Work within the Project limits includes, but is not limited to:

- Removal and disposal of the existing bridge railing and deck to accomplish bridge widening.
- Bridge Widening.
- Remove existing joint armor and rehabilitate joints on existing bridges.
- Mill and inlay a minimum of the final surface course depth the full width of the travel lanes within the project limits defined above. Failed areas in the pavement shall be rehabilitated prior to inlay.
- The new shoulder shall be a minimum of 6 inches of Class 6, Group D granular material (base) and a minimum of 5.75 inches of Hot Mix Asphalt.
- Installation and maintenance of temporary erosion control.
- Install necessary embankment material.
- Install new guardrail approaching the bridge, as required by design.
- Within the Project limits and those areas disturbed by the Contractor:
    - Restripe the shoulder lines.
    - Restripe the centerline to match existing centerline spacing.
    - Install new raised pavement markers.
- Perform grassing per the Mississippi Standard Specifications for Road and Bridge Construction.

Construction of the Project will be within Mississippi Department of Transportation (MDOT) Right of Way. The Commission will secure the Categorical Exclusion for the construction of the Project. Any additional permits required will be the responsibility of the Proposer.

Project Services shall include but are not limited to:

- Design Services – complete development of construction plans and permitting
- Quality Control (QC) of design and quality control / testing of construction
- Construction Services – necessary to build and ensure high quality workmanship of the designed facility.

The Project will include as many of the above listed bridge locations that can be widened up to a maximum lump sum proposal price of $10 Million. The Proposer is required to determine the maximum number of bridge locations to be widened in pairs (i.e. both the northbound and the southbound bridge at each location), in the order presented above (from south to north along I-55).

The Project Scope for this Project will include, but is not limited to, the following Design and Construction work items:

Design:

- Preliminary and Final Roadway Design and Plan Preparation
- Preliminary and Final Bridge Superstructure and Substructure Design and Plan Preparation
- Erosion Control Plan
- Traffic Control Plan
- Environmental Coordination
- Roadway and Bridge Drainage Design
- Geotechnical Design
- QC for Design
- Surveying

Design shall meet all appropriate AASHTO *Policy on Geometric Design of Highways and Streets* (latest edition), AASHTO *Standard Specifications for the Design of Highway Bridges* (latest edition), *Manual on Uniform Traffic Control Devices* (latest edition) (MUTCD) and MDOT design criteria as modified by the RFP. Microstation and Geopak shall be used in the preparation of CADD files.

Construction:

- Demolition of portions of the existing bridges with debris removal and disposal
- All necessary roadway and bridge work
- Surveying
- Drainage
- Environmental coordination
- Erosion and sediment control work items
- Traffic control
- Project management
- Construction management
- QC for Construction, including inspection and testing

Construction shall comply with the MDOT *Standard Specifications for Road And Bridge Construction 2004 Edition* as modified by the RFP to accommodate specific Design/Build requirements, *Manual on Uniform Traffic Control Devices* (latest edition), MDOT Standard Drawings, any Special Provisions, Notice to Bidders, current MDOT publications including, but not limited to, the Materials Division Inspection, Certification, and Testing Manual, and existing AASHTO, ASTM, or MDOT Test Methods.

Design and Construction Responsibilities

The Contractor warrants that it will perform all services in accordance with the standards of care and diligence normally practiced by recognized engineering and construction firms in performing services and obligations of a similar nature. The Contractor warrants that the Project shall be fit for its intended

purpose and that all materials and equipment furnished shall be of good quality and new unless otherwise authorized by the Commission and that the construction shall conform to the Contract requirements.

The Contractor, consistent with applicable state licensing laws, shall provide the necessary design Work. The design professionals employed by Contractor or procured from qualified design consultants shall be licensed by the State of Mississippi. The Work, includes, but is not limited to, surveys, roadway design, traffic control, geotechnical work, hydraulic analyses, storm water management, erosion control, superstructure and substructure design for the preparation of the required drawings, false work, shoring, specifications and other contract documents necessary to permit the Contractor to complete the Project in accordance with the Contract.

The Contractor shall be fully and solely responsible for the accuracy of the design and compliance with specifications, standards and design criteria. The Contractor shall construct the Project in accordance with all applicable Federal, State and local Laws and the Contract.

The Contractor shall provide the necessary supervision, labor, inspection, testing, material, equipment, machinery, temporary utilities and other temporary facilities to permit performance of all earthwork, drainage, foundation work, all traffic control, substructure and superstructure work, excavation, erosion and sediment control work, field layout work, design and construction management and all other work necessary to complete construction of the Project in accordance with the Contract. Contractor shall perform all construction activities efficiently and with the requisite expertise, skill and competence to satisfy the requirements of the Contract. Contractor at all times shall exercise control over the means, methods, sequences and techniques of construction. Contractor's operations and construction methods shall comply with all applicable federal, state and local regulations including but not limited to worker safety, protection and health and protection of the environment and applicable permit requirements.

Control of Work

The Contractor shall be solely responsible for determining the appropriate means, methods and scheduling necessary to complete the Work in a timely manner and in accordance with all Contract requirements. MDOT and FHWA will have the right to review and inspect the Work at any time.

1. Contract Interpretations

The Engineer will decide all questions which may arise as to the quality and acceptability of materials, the Work and the progress of the Work; all questions which may arise as to the interpretation of the specifications; and all questions as to the fulfillment of the Contract.

The Engineer will have the authority, but not the responsibility to suspend the Work, wholly or in part, because of the Contractor's failure to correct conditions unsafe for workers or the general public, for failure to carry out provisions of the Contract, or for failure to carry out orders. The Engineer may also suspend Work for periods deemed necessary due to unsuitable weather conditions, for any conditions considered unsuitable for the prosecution of the Work, or for any other condition or reason deemed to be in the public interest. The Engineer may authorize, in writing, the continued prosecution of Work activities past their specified seasonal limits when it is determined that the quality of the Work will not be reduced and the public interest will be best served. The Engineer will have authority to enforce and make effective all decisions and orders relating to the Contract.

2. Governmental Approvals and Permits

The Contractor is responsible for obtaining all Governmental Approvals and permits, not specifically designated to be obtained by MDOT, necessary to construct the Project. Copies of all correspondence and permits shall be forwarded to MDOT within seven (7) days after the correspondence is received. The Contractor shall integrate design practices to avoid and/or minimize potential Work impacts to wetlands and water of the US. The Contractor shall bear the cost and responsibility of resolving any deviations among the Project Right-of-Way limits, drawings or other information included in the permits that would violate the intent or spirit of the permits. Any proposed changes within the permitted areas shall be coordinated with MDOT and the appropriate agency, and performed to MDOT's satisfaction.

3. Plans for Construction

Prior to the start of construction of any phase or portion of Work, the Contractors shall have plans stamped by MDOT as "Released for Construction" for that phase or portion of Work.

MISSISSIPPI DEPARTMENT OF TRANSPORTATION

SECTION 904 - NOTICE TO PROPOSERS NO. 2887 **CODE: (SP)**

DATE: **12/18/2009**

SUBJECT: **Warm Mix Asphalt**

Bidders are advised that the following products and processes are approved for the production of Warm Mix Asphalt.

Advera® WMA
Aqua Foam
Aspha-min®
Evotherm™
Rediset™ WMX
Sasobit®
WAM Foam
Astec Double Barrel® Green
Terex Warm Mix System
Gencor Industries Ultrafoam GX Systems

MISSISSIPPI DEPARTMENT OF TRANSPORTATION

SECTION 904 - NOTICE TO PROPOSERS NO. 2905 **CODE: (SP)**

DATE: 03/29/2010

SUBJECT: Storm Water Discharge Associated with Construction Activity (> 5 Acres)

A Construction Storm Water General NPDES Permit to discharge storm water associated with construction activity is required.

The Department has acquired Certificate of Permit Coverage MSR-10 under the Mississippi Department of Environmental Quality's (MDEQ) Storm Water Construction General Permit. Projects issued a certificate of permit coverage are granted permission to discharge treated storm water associated with construction activity into State waters. Copies of said permit, completed Large Construction Notice of Intent (LNOI), and Storm Water Pollution Prevention Plan (SWPPP) are on file with the Department.

Prior to the execution of the contract, the successful bidder shall execute and deliver to the Executive Director an original signed copy of the completed Prime Contractor Certification (Form No. 1).

Failure of the bidder to execute and file the completed Prime Contractor Certification (Form No. 1) shall be just cause for the cancellation of the award.

The executed Prime Contractor Certification (Form No. 1) shall be prima facie evidence that the bidder has examined the permit, is satisfied as to the terms and conditions contained therein, and that the bidder has the primary responsibility for meeting all permit including, but not limited to, the inspection and reporting requirements. For this project, the Contractor shall furnish, set up and read, as needed, an on-site rain gauge.

The Contractor shall make inspections in accordance with condition No. S-4, page 14, and shall furnish the Project Engineer with the results of each weekly inspection as soon as possible following the date of inspection. A copy of the inspection form is provided with the packet. The weekly inspections must be documented monthly on the Inspection and Certification Form. The Contractor's representative and the Project Engineer shall jointly review and discuss the results of the inspections so that corrective action can be taken. The Project Engineer shall retain copies of the inspection reports.

The Engineer will have the authority to suspend all work and/or withhold payments for failure of the Contractor to carry out provisions of MDEQ's Storm Water Construction General Permit, the erosion control plan, updates to the erosion control plan, and /or proper maintenance of the BMPs.

Upon successful completion of all permanent erosion and sediment controls, accepted and documented by the full maintenance release, the Construction Division shall submit a completed Notice of Termination (NOT) of Coverage to the Office of Pollution Control.

Securing a permit (s) for storm water discharge associated with the Contractor's activity on any other regulated area the Contractor occupies, shall be the responsibility of the Contractor.

SUPPLEMENT TO FORM FHWA-1273

DATE: 6/15/94

SUBJECT: Final Certificate and Contract Provisions for Subcontracts

All subcontracts shall be in writing and contain all pertinent provisions and requirements of the prime Contract.

Each "Request for Permission to Subcontract" (Mississippi Department of Transportation Form CAD-720) shall include a copy of subcontract for review by the Mississippi Department of Transportation. The federal contract provisions may be omitted from the subcontract copy submitted for review provided the Contractor certifies that the provisions will be physically incorporated into the agreement furnished to the Subcontractor.

In lieu of submitting a copy of the subcontract for review, the Contractor may certify that the subcontract agreement is in writing and that it contains all the requirements and pertinent provisions of the prime contract.

Each Subcontractor will be required to provide a copy of the subcontract agreement for contract compliance reviews, along with physical evidence (copy of FHWA-1273) that requirements and pertinent provisions have been provided for review and adherence.

General Decision Number: MS100203 03/12/2010 MS203

Superseded General Decision Number: MS20080203

State: Mississippi

Construction Type: Highway

Counties: Amite, Covington, Issaquena, Jefferson Davis, Lawrence, Lincoln, Marion, Sharkey, Walthall and Warren Counties in Mississippi.

HIGHWAY CONSTRUCTION PROJECTS (excluding tunnels, building structures in rest area projects & railroad construction; bascule, suspension & spandrel arch bridges designed for commercial navigation, bridges involving marine construction; and other major bridges).

Modification Number	Publication Date
0	03/12/2010

ELEC0480-008 07/01/2009

Amite, Covington, Issaquena, Lawrence, Lincoln, Sharkey, Walthall, and Warren Counties

	Rates	Fringes
ELECTRICIAN	$ 21.80	7.93

---

* ELEC0903-010 12/01/2009

Jefferson Davis and Marion Counties

	Rates	Fringes
ELECTRICIAN	$ 23.20	6.79

SUMS2008-121 09/04/2008

	Rates	Fringes
CARPENTER, Including Form Work	$ 11.42	0.12
CEMENT MASON/CONCRETE FINISHER	$ 10.82	0.00
IRONWORKER, REINFORCING	$ 11.30	0.00
LABORER: Common or General	$ 8.64	0.00
LABORER: Pipelayer	$ 9.68	0.00
OPERATOR: Backhoe/Excavator	$ 11.32	0.00
OPERATOR: Broom	$ 10.17	0.00
OPERATOR: Bulldozer	$ 10.77	0.00

```
OPERATOR:  Crane.................$ 14.57            0.00

OPERATOR:  Grader/Blade..........$ 12.46            0.00

OPERATOR:  Loader................$ 10.15            0.00

OPERATOR:  Mechanic..............$ 12.04            0.00

OPERATOR:  Oiler.................$ 12.33            0.48

OPERATOR:  Roller................$  9.31            0.00

OPERATOR:  Scraper...............$ 10.00            0.00

OPERATOR:  Tractor...............$  7.79            0.00

OPERATOR: Asphalt Paver and
Asphalt Spreader.................$ 10.00            0.00

TRUCK DRIVER.....................$  9.22            0.00
-----------------------------------------------------------------

WELDERS - Receive rate prescribed for craft performing
operation to which welding is incidental.
=========================================================

Unlisted classifications needed for work not included within
the scope of the
classifications listed may be added after award only as
provided in the labor
standards contract clauses (29 CFR 5.5(a)(1)(ii)).

-----------------------------------------------------------------
--

In the listing above, the "SU" designation means that rates
listed under the
identifier do not reflect collectively bargained wage and
fringe benefit
rates.  Other designations indicate unions whose rates have
been determined
to be prevailing.

-----------------------------------------------------------------
--

                    WAGE DETERMINATION APPEALS PROCESS


1.) Has there been an initial decision in he matter? This can
be:

*  an existing published wage determination
*  a survey underlying a wage determination
*  a Wage and Hour Division letter setting forth a position on
a wage
   determination matter
*  a conformance (additional classification and rate) ruling
```

On survey related matters, initial contact, including requests for summaries of surveys, should be with the Wage and Hour Regional Office for the area in which the survey was conducted because those Regional Offices have responsibility for the Davis-Bacon survey program. If the response from this initial contact is not satisfactory, then the process described in 2.) and 3.) should be followed.

With regard to any other matter not yet ripe for the formal process described here, initial contact should be with the Branch of Construction Wage Determinations. Write to:

Branch of Construction Wage Determinations
Wage and Hour Division
U.S. Department of Labor
200 Constitution Avenue, N.W.
Washington, DC 20210

2.) If the answer to the question in 1.) is yes, then an interested party (those affected by the action) can request review and reconsideration from the Wage and Hour Administrator (See 29 CFR Part 1.8 and 29 CFR Part 7). Write to:

Wage and Hour Administrator
U.S. Department of Labor
200 Constitution Avenue, N.W.
Washington, DC 20210

The request should be accompanied by a full statement of the interested party's position and by any information (wage payment data, project description, area practice material, etc.) that the requestor considers relevant to the issue.

3.) If the decision of the Administrator is not favorable, an interested party may appeal directly to the Administrative Review Board (formerly the Wage Appeals Board). Write to:

Administrative Review Board
U.S. Department of Labor
200 Constitution Avenue, N.W.
Washington, DC 20210

4.) All decisions by the Administrative Review Board are final.

END OF GENERAL DECISION

REQUIRED CONTRACT PROVISIONS FEDERAL-AID CONSTRUCTION CONTRACTS

FHWA-1273 Electronic version -- March 10, 1994

		Page
I.	General	1
II.	Nondiscrimination	1
III.	Nonsegregated Facilities	3
IV.	Payment of Predetermined Minimum Wage	3
V.	Statements and Payrolls	6
VI.	Record of Materials, Supplies, and Labor	6
VII.	Subletting or Assigning the Contract	7
VIII.	Safety: Accident Prevention	7
IX.	False Statements Concerning Highway Projects	7
X.	Implementation of Clean Air Act and Federal Water Pollution Control Act	8
XI.	Certification Regarding Debarment, Suspension, Ineligibility, and Voluntary Exclusion	8
XII.	Certification Regarding Use of Contract Funds for Lobbying	9

ATTACHMENTS

A. Employment Preference for Appalachian Contracts (included in Appalachian contracts only)

I. GENERAL

1. These contract provisions shall apply to all work performed on the contract by the contractor's own organization and with the assistance of workers under the contractor's immediate superintendence and to all work performed on the contract by piecework, station work, or by subcontract.

2. Except as otherwise provided for in each section, the contractor shall insert in each subcontract all of the stipulations contained in these Required Contract Provisions, and further require their inclusion in any lower tier subcontract or purchase order that may in turn be made. The Required Contract Provisions shall not be incorporated by reference in any case. The prime contractor shall be responsible for compliance by any subcontractor or lower tier subcontractor with these Required Contract Provisions.

3. A breach of any of the stipulations contained in these Required Contract Provisions shall be sufficient grounds for termination of the contract.

4. A breach of the following clauses of the Required Contract Provisions may also be grounds for debarment as provided in 29 CFR 5.12:

Section I, paragraph 2;
Section IV, paragraphs 1, 2, 3, 4, and 7;
Section V, paragraphs 1 and 2a through 2g.

5. Disputes arising out of the labor standards provisions of Section IV (except paragraph 5) and Section V of these Required Contract Provisions shall not be subject to the general disputes clause of this contract. Such disputes shall be resolved in accordance with the procedures of the U.S. Department of Labor (DOL) as set forth in 29 CFR 5, 6, and 7. Disputes within the meaning of this clause include disputes between the contractor (or any of its subcontractors) and the contracting agency, the DOL, or the contractor's employees or their representatives.

6. **Selection of Labor:** During the performance of this contract, the contractor shall not:

a. discriminate against labor from any other State, possession, or territory of the United States (except for employment preference for Appalachian contracts, when applicable, as specified in Attachment A), or

b. employ convict labor for any purpose within the limits of the project unless it is labor performed by convicts who are on parole, supervised release, or probation.

II. NONDISCRIMINATION

(Applicable to all Federal-aid construction contracts and to all related subcontracts of $10,000 or more.)

1. **Equal Employment Opportunity:** Equal employment opportunity (EEO) requirements not to discriminate and to take affirmative action to assure equal opportunity as set forth under laws, executive orders, rules, regulations (28 CFR 35, 29 CFR 1630 and 41 CFR 60) and orders of the Secretary of Labor as modified by the provisions prescribed herein, and imposed pursuant to 23 U.S.C. 140 shall constitute the EEO and specific affirmative action standards for the contractor's project activities under this contract. The Equal Opportunity Construction Contract Specifications set forth under 41 CFR 60-4.3 and the provisions of the American Disabilities Act of 1990 (42 U.S.C. 12101 et seq.) set forth under 28 CFR 35 and 29 CFR 1630 are incorporated by reference in this contract. In the execution of this contract, the contractor agrees to comply with the following minimum specific requirement activities of EEO:

a. The contractor will work with the State highway agency (SHA) and the Federal Government in carrying out EEO obligations and in their review of his/her activities under the contract.

b. The contractor will accept as his operating policy the following statement:

"It is the policy of this Company to assure that applicants are employed, and that employees are treated during employment, without regard to their race, religion, sex, color, national origin, age or disability. Such action shall include: employment, upgrading, demotion, or transfer; recruitment or recruitment advertising; layoff or termination; rates of pay or other forms of compensation; and selection for training, including apprenticeship, preapprenticeship, and/or on-the-job training."

2. **EEO Officer:** The contractor will designate and make known to the SHA contracting officers an EEO Officer who will have the responsibility for and must be capable of effectively administering and promoting an active contractor program of EEO and who must be assigned adequate authority and responsibility to do so.

3. **Dissemination of Policy:** All members of the contractor's staff who are authorized to hire, supervise, promote, and discharge employees, or who recommend such action, or who are substantially involved in such action, will be made fully cognizant of, and will implement, the contractor's EEO policy and contractual responsibilities to provide EEO in each grade and classification of employment. To ensure that the above agreement will be met, the following actions will be taken as a minimum:

a. Periodic meetings of supervisory and personnel office employees will be conducted before the start of work and then not less often than once every six months, at which time the contractor's EEO policy and its implementation will be reviewed and explained. The meetings will be conducted by the EEO Officer.

b. All new supervisory or personnel office employees will be given a thorough indoctrination by the EEO Officer, covering all major aspects of the contractor's EEO obligations within thirty days following their reporting for duty with the contractor.

c. All personnel who are engaged in direct recruitment for the project will be instructed by the EEO Officer in the contractor's procedures for locating and hiring minority group employees.

d. Notices and posters setting forth the contractor's EEO policy will be placed in areas readily accessible to employees, applicants for employment and potential employees.

e. The contractor's EEO policy and the procedures to implement such policy will be brought to the attention of employees by means of meetings, employee handbooks, or other appropriate means.

4. **Recruitment:** When advertising for employees, the contractor will include in all advertisements for employees the notation: "An Equal Opportunity Employer." All such advertisements will be placed in publications having a large circulation among minority groups in the area from which the project work force would normally be derived.

a. The contractor will, unless precluded by a valid bargaining agreement, conduct systematic and direct recruitment through public and private employee referral sources likely to yield qualified minority group applicants. To meet this requirement, the contractor will identify sources of potential minority group employees, and establish with such identified sources procedures whereby minority group applicants may be referred to the contractor for employment consideration.

b. In the event the contractor has a valid bargaining agreement providing for exclusive hiring hall referrals, he is expected to observe the provisions of that agreement to the extent that the system permits the contractor's compliance with EEO contract provisions. (The DOL has held that where implementation of such agreements have the effect of discriminating against minorities or women, or obligates the contractor to do the same, such implementation violates Executive Order 11246, as amended.)

c. The contractor will encourage his present employees to refer minority group applicants for employment. Information and procedures with regard to referring minority group applicants will be discussed with employees.

5. **Personnel Actions:** Wages, working conditions, and employee benefits shall be established and administered, and personnel actions of every type, including hiring, upgrading, promotion, transfer, demotion, layoff, and termination, shall be taken without regard to race, color, religion, sex, national origin, age or disability. The following procedures shall be followed:

a. The contractor will conduct periodic inspections of project sites to insure that working conditions and employee facilities do not indicate discriminatory treatment of project site personnel.

b. The contractor will periodically evaluate the spread of wages paid within each classification to determine any evidence of discriminatory wage practices.

c. The contractor will periodically review selected personnel actions in depth to determine whether there is evidence of discrimination. Where evidence is found, the contractor will promptly take corrective action. If the review indicates that the discrimination may extend beyond the actions reviewed, such corrective action shall include all affected persons.

d. The contractor will promptly investigate all complaints of alleged discrimination made to the contractor in connection with his obligations under this contract, will attempt to resolve such complaints, and will take appropriate corrective action within a reasonable time. If the investigation indicates that the discrimination may affect persons other than the complainant, such corrective action shall include such other persons. Upon completion of each investigation, the contractor will inform every complainant of all of his avenues of appeal.

6. **Training and Promotion:**

a. The contractor will assist in locating, qualifying, and increasing the skills of minority group and women employees, and applicants for employment.

b. Consistent with the contractor's work force requirements and as permissible under Federal and State regulations, the contractor shall make full use of training programs, i.e., apprenticeship, and on-the-job training programs for the geographical area of contract performance. Where feasible, 25 percent of apprentices or trainees in each occupation shall be in their first year of apprenticeship or training. In the event a special provision for training is provided under this contract, this subparagraph will be superseded as indicated in the special provision.

c. The contractor will advise employees and applicants for employment of available training programs and entrance requirements for each.

d. The contractor will periodically review the training and promotion potential of minority group and women employees and will encourage eligible employees to apply for such training and promotion.

7. **Unions:** If the contractor relies in whole or in part upon unions as a source of employees, the contractor will use his/her best efforts to obtain the cooperation of such unions to increase opportunities for minority groups and women within the unions, and to effect referrals by such unions of minority and female employees. Actions by the contractor either directly or through a contractor's association acting as agent will include the procedures set forth below:

a. The contractor will use best efforts to develop, in cooperation with the unions, joint training programs aimed toward qualifying more minority group members and women for membership in the unions and increasing the skills of minority group employees and women so that they may qualify for higher paying employment.

b. The contractor will use best efforts to incorporate an EEO clause into each union agreement to the end that such union will be contractually bound to refer applicants without regard to their race, color, religion, sex, national origin, age or disability.

c. The contractor is to obtain information as to the referral practices and policies of the labor union except that to the extent such information is within the exclusive possession of the labor union and such labor union refuses to furnish such information to the contractor, the contractor shall so certify to the SHA and shall set forth what efforts have been made to obtain such information.

d. In the event the union is unable to provide the contractor with a reasonable flow of minority and women referrals within the time limit set forth in the collective bargaining agreement, the contractor will, through independent recruitment efforts, fill the employment vacancies without regard to race, color, religion, sex, national origin, age or disability; making full efforts to obtain qualified and/or qualifiable minority group persons and women. (The DOL has held that it shall be no excuse that the union with which the contractor has a collective bargaining agreement providing for exclusive referral failed to refer minority employees.) In the event the union referral practice prevents the contractor from meeting the obligations pursuant to Executive Order 11246, as amended, and these special provisions, such contractor shall immediately notify the SHA.

8. **Selection of Subcontractors, Procurement of Materials and Leasing of Equipment:** The contractor shall not discriminate on the grounds of race, color, religion, sex, national origin, age or disability in the selection and retention of subcontractors, including procurement of materials and leases of equipment.

a. The contractor shall notify all potential subcontractors and suppliers of his/her EEO obligations under this contract.

b. Disadvantaged business enterprises (DBE), as defined in 49 CFR 23, shall have equal opportunity to compete for and perform subcontracts which the contractor enters into pursuant to this contract. The contractor will use his best efforts to solicit bids from and to utilize DBE subcontractors or subcontractors with meaningful minority group and female representation among their employees. Contractors shall obtain lists of DBE construction firms from SHA personnel.

c. The contractor will use his best efforts to ensure subcontractor compliance with their EEO obligations.

9. **Records and Reports:** The contractor shall keep such records as necessary to document compliance with the EEO requirements. Such records shall be retained for a period of three years following completion of the contract work and shall be available at reasonable times and places for inspection by authorized representatives of the SHA and the FHWA.

a. The records kept by the contractor shall document the following:

(1) The number of minority and non-minority group members and women employed in each work classification on the project;

(2) The progress and efforts being made in cooperation with unions, when applicable, to increase employment opportunities for minorities and women;

(3) The progress and efforts being made in locating, hiring, training, qualifying, and upgrading minority and female employees; and

(4) The progress and efforts being made in securing the services of DBE subcontractors or subcontractors with meaningful minority and female representation among their employees.

b. The contractors will submit an annual report to the SHA each July for the duration of the project, indicating the number of minority, women, and non-minority group employees currently engaged in each work classification required by the contract work. This information is to be reported on Form FHWA-1391. If on-the-job training is being required by special provision, the contractor will be required to collect and report training data.

III. NONSEGREGATED FACILITIES

(Applicable to all Federal-aid construction contracts and to all related subcontracts of $10,000 or more.)

a. By submission of this bid, the execution of this contract or subcontract, or the consummation of this material supply agreement or purchase order, as appropriate, the bidder, Federal-aid construction contractor, subcontractor, material supplier, or vendor, as appropriate, certifies that the firm does not maintain or provide for its employees any segregated facilities at any of its establishments, and that the firm does not permit its employees to perform their services at any location, under its control, where segregated facilities are maintained. The firm agrees that a breach of this certification is a violation of the EEO provisions of this contract. The firm further certifies that no employee will be denied access to adequate facilities on the basis of sex or disability.

b. As used in this certification, the term "segregated facilities" means any waiting rooms, work areas, restrooms and washrooms, restaurants and other eating areas, timeclocks, locker rooms, and other storage or dressing areas, parking lots, drinking fountains, recreation or entertainment areas, transportation, and housing facilities provided for employees which are segregated by explicit directive, or are, in fact, segregated on the basis of race, color, religion, national origin, age or disability, because of habit, local custom, or otherwise. The only exception will be for the disabled when the demands for accessibility override (e.g. disabled parking).

c. The contractor agrees that it has obtained or will obtain identical certification from proposed subcontractors or material suppliers prior to award of subcontracts or consummation of material supply agreements of $10,000 or more and that it will retain such certifications in its files.

IV. PAYMENT OF PREDETERMINED MINIMUM WAGE

(Applicable to all Federal-aid construction contracts exceeding $2,000 and to all related subcontracts, except for projects located on roadways classified as local roads or rural minor collectors, which are exempt.)

1. **General:**

a. All mechanics and laborers employed or working upon the site of the work will be paid unconditionally and not less often than once a week and without subsequent deduction or rebate on any account [except such payroll deductions as are permitted by regulations (29 CFR 3) issued by the Secretary of Labor under the Copeland Act (40 U.S.C. 276c)] the full amounts of wages and bona fide fringe benefits (or cash equivalents thereof) due at time of payment. The payment shall be computed at wage rates not less than those contained in the wage determination of the Secretary of Labor (hereinafter "the wage determination") which is attached hereto and made a part hereof, regardless of any contractual relationship which may be alleged to exist between the contractor or its subcontractors and such laborers and mechanics. The wage determination (including any additional classifications and wage

rates conformed under paragraph 2 of this Section IV and the DOL poster (WH-1321) or Form FHWA-1495) shall be posted at all times by the contractor and its subcontractors at the site of the work in a prominent and accessible place where it can be easily seen by the workers. For the purpose of this Section, contributions made or costs reasonably anticipated for bona fide fringe benefits under Section 1(b)(2) of the Davis-Bacon Act (40 U.S.C. 276a) on behalf of laborers or mechanics are considered wages paid to such laborers or mechanics, subject to the provisions of Section IV, paragraph 3b, hereof. Also, for the purpose of this Section, regular contributions made or costs incurred for more than a weekly period (but not less often than quarterly) under plans, funds, or programs, which cover the particular weekly period, are deemed to be constructively made or incurred during such weekly period. Such laborers and mechanics shall be paid the appropriate wage rate and fringe benefits on the wage determination for the classification of work actually performed, without regard to skill, except as provided in paragraphs 4 and 5 of this Section IV.

b. Laborers or mechanics performing work in more than one classification may be compensated at the rate specified for each classification for the time actually worked therein, provided, that the employer's payroll records accurately set forth the time spent in each classification in which work is performed.

c. All rulings and interpretations of the Davis-Bacon Act and related acts contained in 29 CFR 1, 3, and 5 are herein incorporated by reference in this contract.

2. **Classification:**

a. The SHA contracting officer shall require that any class of laborers or mechanics employed under the contract, which is not listed in the wage determination, shall be classified in conformance with the wage determination.

b. The contracting officer shall approve an additional classification, wage rate and fringe benefits only when the following criteria have been met:

(1) the work to be performed by the additional classification requested is not performed by a classification in the wage determination;

(2) the additional classification is utilized in the area by the construction industry;

(3) the proposed wage rate, including any bona fide fringe benefits, bears a reasonable relationship to the wage rates contained in the wage determination; and

(4) with respect to helpers, when such a classification prevails in the area in which the work is performed.

c. If the contractor or subcontractors, as appropriate, the laborers and mechanics (if known) to be employed in the additional classification or their representatives, and the contracting officer agree on the classification and wage rate (including the amount designated for fringe benefits where appropriate), a report of the action taken shall be sent by the contracting officer to the DOL, Administrator of the Wage and Hour Division, Employment Standards Administration, Washington, D.C. 20210. The Wage and Hour Administrator, or an authorized representative, will approve, modify, or disapprove every additional classification action within 30 days of receipt and so advise the contracting officer or will notify the contracting officer within the 30-day period that additional time is necessary.

d. In the event the contractor or subcontractors, as appropriate, the laborers or mechanics to be employed in the additional classification or their representatives, and the contracting officer do not agree on the proposed classification and wage rate (including the amount designated for fringe benefits, where appropriate), the contracting officer shall refer the questions, including the views of all interested parties and the recommendation of the contracting officer, to the Wage and Hour Administrator for determination. Said Administrator, or an authorized representative, will issue a determination within 30 days of receipt and so advise the contracting officer or will notify the contracting officer within the 30-day period that additional time is necessary

e. The wage rate (including fringe benefits where appropriate) determined pursuant to paragraph 2c or 2d of this Section IV shall be paid to all workers performing work in the additional classification from the first day on which work is performed in the classification.

3. **Payment of Fringe Benefits:**

a. Whenever the minimum wage rate prescribed in the contract for a class of laborers or mechanics includes a fringe benefit which is not expressed as an hourly rate, the contractor or subcontractors, as appropriate, shall either pay the benefit as stated in the wage determination or shall pay another bona fide fringe benefit or an hourly case equivalent thereof.

b. If the contractor or subcontractor, as appropriate, does not make payments to a trustee or other third person, he/she may consider as a part of the wages of any laborer or mechanic the amount of any costs reasonably anticipated in providing bona fide fringe benefits under a plan or program, provided, that the Secretary of Labor has found, upon the written request of the contractor, that the applicable standards of the Davis-Bacon Act have been met. The Secretary of Labor may require the contractor to set aside in a separate account assets for the meeting of obligations under the plan or program.

4. **Apprentices and Trainees (Programs of the U.S. DOL) and Helpers:**

a. Apprentices:

(1) Apprentices will be permitted to work at less than the predetermined rate for the work they performed when they are employed pursuant to and individually registered in a bona fide apprenticeship program registered with the DOL, Employment and Training Administration, Bureau of Apprenticeship and Training, or with a State apprenticeship agency recognized by the Bureau, or if a person is employed in his/her first 90 days of probationary employment as an apprentice in such an apprenticeship program, who is not individually registered in the program, but who has been certified by the Bureau of Apprenticeship and Training or a State apprenticeship agency (where appropriate) to be eligible for probationary employment as an apprentice.

(2) The allowable ratio of apprentices to journeyman-level employees on the job site in any craft classification shall not be greater than the ratio permitted to the contractor as to the entire work force under the registered program. Any employee listed on a payroll at an apprentice wage rate, who is not registered or otherwise employed as stated above, shall be paid not less than the applicable wage rate listed in the wage determination for the classification of work actually performed. In addition, any apprentice performing work on the job site in excess of the ratio permitted under the registered program shall be paid not less than the

applicable wage rate on the wage determination for the work actually performed. Where a contractor or subcontractor is performing construction on a project in a locality other than that in which its program is registered, the ratios and wage rates (expressed in percentages of the journeyman-level hourly rate) specified in the contractor's or subcontractor's registered program shall be observed.

(3) Every apprentice must be paid at not less than the rate specified in the registered program for the apprentice's level of progress, expressed as a percentage of the journeyman-level hourly rate specified in the applicable wage determination. Apprentices shall be paid fringe benefits in accordance with the provisions of the apprenticeship program. If the apprenticeship program does not specify fringe benefits, apprentices must be paid the full amount of fringe benefits listed on the wage determination for the applicable classification. If the Administrator for the Wage and Hour Division determines that a different practice prevails for the applicable apprentice classification, fringes shall be paid in accordance with that determination.

(4) In the event the Bureau of Apprenticeship and Training, or a State apprenticeship agency recognized by the Bureau, withdraws approval of an apprenticeship program, the contractor or subcontractor will no longer be permitted to utilize apprentices at less than the applicable predetermined rate for the comparable work performed by regular employees until an acceptable program is approved.

b. Trainees:

(1) Except as provided in 29 CFR 5.16, trainees will not be permitted to work at less than the predetermined rate for the work performed unless they are employed pursuant to and individually registered in a program which has received prior approval, evidenced by formal certification by the DOL, Employment and Training Administration.

(2) The ratio of trainees to journeyman-level employees on the job site shall not be greater than permitted under the plan approved by the Employment and Training Administration. Any employee listed on the payroll at a trainee rate who is not registered and participating in a training plan approved by the Employment and Training Administration shall be paid not less than the applicable wage rate on the wage determination for the classification of work actually performed. In addition, any trainee performing work on the job site in excess of the ratio permitted under the registered program shall be paid not less than the applicable wage rate on the wage determination for the work actually performed.

(3) Every trainee must be paid at not less than the rate specified in the approved program for his/her level of progress, expressed as a percentage of the journeyman-level hourly rate specified in the applicable wage determination. Trainees shall be paid fringe benefits in accordance with the provisions of the trainee program. If the trainee program does not mention fringe benefits, trainees shall be paid the full amount of fringe benefits listed on the wage determination unless the Administrator of the Wage and Hour Division determines that there is an apprenticeship program associated with the corresponding journeyman-level wage rate on the wage determination which provides for less than full fringe benefits for apprentices, in which case such trainees shall receive the same fringe benefits as apprentices.

(4) In the event the Employment and Training Administration withdraws approval of a training program, the contractor or subcontractor will no longer be permitted to utilize trainees at less than the applicable predetermined rate for the work performed until an acceptable program is approved.

c. Helpers:

Helpers will be permitted to work on a project if the helper classification is specified and defined on the applicable wage determination or is approved pursuant to the conformance procedure set forth in Section IV.2. Any worker listed on a payroll at a helper wage rate, who is not a helper under a approved definition, shall be paid not less than the applicable wage rate on the wage determination for the classification of work actually performed.

5. **Apprentices and Trainees (Programs of the U.S. DOT):**

Apprentices and trainees working under apprenticeship and skill training programs which have been certified by the Secretary of Transportation as promoting EEO in connection with Federal-aid highway construction programs are not subject to the requirements of paragraph 4 of this Section IV. The straight time hourly wage rates for apprentices and trainees under such programs will be established by the particular programs. The ratio of apprentices and trainees to journeymen shall not be greater than permitted by the terms of the particular program.

6. **Withholding:**

The SHA shall upon its own action or upon written request of an authorized representative of the DOL withhold, or cause to be withheld, from the contractor or subcontractor under this contract or any other Federal contract with the same prime contractor, or any other Federally-assisted contract subject to Davis-Bacon prevailing wage requirements which is held by the same prime contractor, as much of the accrued payments or advances as may be considered necessary to pay laborers and mechanics, including apprentices, trainees, and helpers, employed by the contractor or any subcontractor the full amount of wages required by the contract. In the event of failure to pay any laborer or mechanic, including any apprentice, trainee, or helper, employed or working on the site of the work, all or part of the wages required by the contract, the SHA contracting officer may, after written notice to the contractor, take such action as may be necessary to cause the suspension of any further payment, advance, or guarantee of funds until such violations have ceased.

7. **Overtime Requirements:**

No contractor or subcontractor contracting for any part of the contract work which may require or involve the employment of laborers, mechanics, watchmen, or guards (including apprentices, trainees, and helpers described in paragraphs 4 and 5 above) shall require or permit any laborer, mechanic, watchman, or guard in any workweek in which he/she is employed on such work, to work in excess of 40 hours in such workweek unless such laborer, mechanic, watchman, or guard receives compensation at a rate not less than one-and-one-half times his/her basic rate of pay for all hours worked in excess of 40 hours in such workweek.

8. **Violation:**

Liability for Unpaid Wages; Liquidated Damages: In the event of any violation of the clause set forth in paragraph 7 above, the contractor and any subcontractor responsible thereof shall be liable to the affected employee for his/her unpaid wages. In addition, such contractor and subcontractor shall be liable to the United States (in the case of work done under contract for the District of Columbia or a territory, to such District or to such territory) for liquidated damages. Such liquidated damages shall be

computed with respect to each individual laborer, mechanic, watchman, or guard employed in violation of the clause set forth in paragraph 7, in the sum of $10 for each calendar day on which such employee was required or permitted to work in excess of the standard work week of 40 hours without payment of the overtime wages required by the clause set forth in paragraph 7.

9. **Withholding for Unpaid Wages and Liquidated Damages:**

The SHA shall upon its own action or upon written request of any authorized representative of the DOL withhold, or cause to be withheld, from any monies payable on account of work performed by the contractor or subcontractor under any such contract or any other Federal contract with the same prime contractor, or any other Federally-assisted contract subject to the Contract Work Hours and Safety Standards Act, which is held by the same prime contractor, such sums as may be determined to be necessary to satisfy any liabilities of such contractor or subcontractor for unpaid wages and liquidated damages as provided in the clause set forth in paragraph 8 above.

V. STATEMENTS AND PAYROLLS

(Applicable to all Federal-aid construction contracts exceeding $2,000 and to all related subcontracts, except for projects located on roadways classified as local roads or rural collectors, which are exempt.)

1. **Compliance with Copeland Regulations (29 CFR 3):**

The contractor shall comply with the Copeland Regulations of the Secretary of Labor which are herein incorporated by reference.

2. **Payrolls and Payroll Records:**

a. Payrolls and basic records relating thereto shall be maintained by the contractor and each subcontractor during the course of the work and preserved for a period of 3 years from the date of completion of the contract for all laborers, mechanics, apprentices, trainees, watchmen, helpers, and guards working at the site of the work.

b. The payroll records shall contain the name, social security number, and address of each such employee; his or her correct classification; hourly rates of wages paid (including rates of contributions or costs anticipated for bona fide fringe benefits or cash equivalent thereof the types described in Section 1(b)(2)(B) of the Davis Bacon Act); daily and weekly number of hours worked; deductions made; and actual wages paid. In addition, for Appalachian contracts, the payroll records shall contain a notation indicating whether the employee does, or does not, normally reside in the labor area as defined in Attachment A, paragraph 1. Whenever the Secretary of Labor, pursuant to Section IV, paragraph 3b, has found that the wages of any laborer or mechanic include the amount of any costs reasonably anticipated in providing benefits under a plan or program described in Section 1(b)(2)(B) of the Davis Bacon Act, the contractor and each subcontractor shall maintain records which show that the commitment to provide such benefits is enforceable, that the plan or program is financially responsible, that the plan or program has been communicated in writing to the laborers or mechanics affected, and show the cost anticipated or the actual cost incurred in providing benefits. Contractors or subcontractors employing apprentices or trainees under approved programs shall maintain written evidence of the registration of apprentices and trainees, and ratios and wage rates prescribed in the applicable programs.

c. Each contractor and subcontractor shall furnish, each week in which any contract work is performed, to the SHA resident engineer a payroll of wages paid each of its employees (including apprentices, trainees, and helpers, described in Section IV, paragraphs 4 and 5, and watchmen and guards engaged on work during the preceding weekly payroll period). The payroll submitted required to be maintained under paragraph 2b of this Section V. This information may be submitted in any form desired. Optional Form WH-347 is available for this purpose and may be purchased from the Superintendent of Documents (Federal stock number 029-005-0014-1), U.S. Government Printing Office, Washington, D.C. 20402. The prime contractor is responsible for the submission of copies of payrolls by all subcontractors.

d. Each payroll submitted shall be accompanied by a "Statement of Compliance," signed by the contractor or subcontractor or his/her agent who pays or supervises the payment of the persons employed under the contract and shall certify the following:

(1) that the payroll for the payroll period contains the information required to be maintained under paragraph 2b of this Section V and that such information is correct and complete;

(2) that such laborer or mechanic (including each helper, apprentice, and trainee) employed on the contract during the payroll period has been paid the full weekly wages earned, without rebate, either directly or indirectly, and that no deductions have been made either directly or indirectly from the full wages earned, other than permissible deductions as set forth in the Regulations, 29 CFR 3;

(3) that each laborer or mechanic has been paid not less that the applicable wage rate and fringe benefits or cash equivalent for the classification of worked performed, as specified in the applicable wage determination incorporated into the contract.

e. The weekly submission of a properly executed certification set forth on the reverse side of Optional Form WH-347 shall satisfy the requirement for submission of the "Statement of Compliance" required by paragraph 2d of this Section V.

f. The falsification of any of the above certifications may subject the contractor to civil or criminal prosecution under 18 U.S.C. 1001 and 31 U.S.C. 231.

g. The contractor or subcontractor shall make the records required under paragraph 2b of this Section V available for inspection, copying, or transcription by authorized representatives of the SHA, the FHWA, or the DOL, and shall permit such representatives to interview employees during working hours on the job. If the contractor or subcontractor fails to submit the required records or to make them available, the SHA, the FHWA, the DOL, or all may, after written notice to the contractor, sponsor, applicant, or owner, take such actions as may be necessary to cause the suspension of any further payment, advance, or guarantee of funds. Furthermore, failure to submit the required records upon request or to make such records available may be grounds for debarment action pursuant to 29 CFR 5.12.

VI. RECORD OF MATERIALS, SUPPLIES, AND LABOR

1. On all Federal-aid contracts on the National Highway System, except those which provide solely for the installation of protective devices at railroad grade crossings, those which are constructed on a force account or direct labor basis, highway beautification contracts, and contracts for which the total final

construction cost for roadway and bridge is less than $1,000,000 (23 CFR 635) the contractor shall:

a. Become familiar with the list of specific materials and supplies contained in Form FHWA-47, "Statement of Materials and Labor Used by Contractor of Highway Construction Involving Federal Funds," prior to the commencement of work under this contract.

b. Maintain a record of the total cost of all materials and supplies purchased for and incorporated in the work, and also of the quantities of those specific materials and supplies listed on Form FHWA-47, and in the units shown on Form FHWA-47.

c. Furnish, upon the completion of the contract, to the SHA resident engineer on Form FHWA-47 together with the data required in paragraph 1b relative to materials and supplies, a final labor summary of all contract work indicating the total hours worked and the total amount earned.

2. At the prime contractor's option, either a single report covering all contract work or separate reports for the contractor and for each subcontract shall be submitted.

VII. SUBLETTING OR ASSIGNING THE CONTRACT

1. The contractor shall perform with its own organization contract work amounting to not less than 30 percent (or a greater percentage if specified elsewhere in the contract) of the total original contract price, excluding any specialty items designated by the State. Specialty items may be performed by subcontract and the amount of any such specialty items performed may be deducted from the total original contract price before computing the amount of work required to be performed by the contractor's own organization (23 CFR 635).

a. "Its own organization" shall be construed to include only workers employed and paid directly by the prime contractor and equipment owned or rented by the prime contractor, with or without operators. Such term does not include employees or equipment of a subcontractor, assignee, or agent of the prime contractor.

b. "Specialty Items" shall be construed to be limited to work that requires highly specialized knowledge, abilities, or equipment not ordinarily available in the type of contracting organizations qualified and expected to bid on the contract as a whole and in general are to be limited to minor components of the overall contract.

2. The contract amount upon which the requirements set forth in paragraph 1 of Section VII is computed includes the cost of material and manufactured products which are to be purchased or produced by the contractor under the contract provisions.

3. The contractor shall furnish (a) a competent superintendent or supervisor who is employed by the firm, has full authority to direct performance of the work in accordance with the contract requirements, and is in charge of all construction operations (regardless of who performs the work) and (b) such other of its own organizational resources (supervision, management, and engineering services) as the SHA contracting officer determines is necessary to assure the performance of the contract.

4. No portion of the contract shall be sublet, assigned or otherwise disposed of except with the written consent of the SHA contracting officer, or authorized representative, and such consent when given shall not be construed to relieve the contractor of any responsibility for the fulfillment of the contract. Written consent will be given only after the SHA has assured that each subcontract is evidenced in writing and that it contains all pertinent provisions and requirements of the prime contract.

VIII. SAFETY: ACCIDENT PREVENTION

1. In the performance of this contract the contractor shall comply with all applicable Federal, State, and local laws governing safety, health, and sanitation (23 CFR 635). The contractor shall provide all safeguards, safety devices and protective equipment and take any other needed actions as it determines, or as the SHA contracting officer may determine, to be reasonably necessary to protect the life and health of employees on the job and the safety of the public and to protect property in connection with the performance of the work covered by the contract.

2. It is a condition of this contract, and shall be made a condition of each subcontract, which the contractor enters into pursuant to this contract, that the contractor and any subcontractor shall not permit any employee, in performance of the contract, to work in surroundings or under conditions which are unsanitary, hazardous or dangerous to his/her health or safety, as determined under construction safety and health standards (29 CFR 1926) promulgated by the Secretary of Labor, in accordance with Section 107 of the Contract Work Hours and Safety Standards Act (40 U.S.C. 333).

3. Pursuant to 29 CFR 1926.3, it is a condition of this contract that the Secretary of Labor or authorized representative thereof, shall have right of entry to any site of contract performance to inspect or investigate the matter of compliance with the construction safety and health standards and to carry out the duties of the Secretary under Section 107 of the Contract Work Hours and Safety Standards Act (40 U.S.C. 333).

IX. FALSE STATEMENTS CONCERNING HIGHWAY PROJECTS

In order to assure high quality and durable construction in conformity with approved plans and specifications and a high degree of reliability on statements and representations made by engineers, contractors, suppliers, and workers on Federal-aid highway projects, it is essential that all persons concerned with the project perform their functions as carefully, thoroughly, and honestly as possible. Willful falsification, distortion, or misrepresentation with respect to any facts related to the project is a violation of Federal law. To prevent any misunderstanding regarding the seriousness of these and similar acts, the following notice shall be posted on each Federal-aid highway project (23 CFR 635) in one or more places where it is readily available to all persons concerned with the project:

NOTICE TO ALL PERSONNEL ENGAGED ON FEDERAL-AID HIGHWAY PROJECTS

18 U.S.C. 1020 reads as follows:

"Whoever, being an officer, agent, or employee of the United States, or of any State or Territory, or whoever, whether a person, association, firm, or corporation, knowingly makes any false statement, false representation, or false report as to the character, quality, quantity, or cost of the material used or to be used, or the quantity or quality of the work performed or to be performed, or the cost thereof in connection with the submission of plans, maps, specifications, contracts, or costs of construction on any highway or related project submitted for approval to the Secretary of Transportation; or

Whoever knowingly makes any false statement, false representation, false report or false claim with respect to the character, quality, quantity, or cost of any work performed or to be performed, or materials furnished or to be furnished, in connection with the construction of any highway or related project approved by the Secretary of Transportation; or

Whoever knowingly makes any false statement or false representation as to material fact in any statement, certificate, or report submitted pursuant to provisions of the Federal-aid Roads Act approved July 1, 1916, (39 Stat. 355), as amended and supplemented;

Shall be fined not more that $10,000 or imprisoned not more than 5 years or both."

X. IMPLEMENTATION OF CLEAN AIR ACT AND FEDERAL WATER POLLUTION CONTROL ACT

(Applicable to all Federal-aid construction contracts and to all related subcontracts of $100,000 or more.)

By submission of this bid or the execution of this contract, or subcontract, as appropriate, the bidder, Federal-aid construction contractor, or subcontractor, as appropriate, will be deemed to have stipulated as follows:

1. That any facility that is or will be utilized in the performance of this contract, unless such contract is exempt under the Clean Air Act, as amended (42 U.S.C. 1857 et seq., as amended by Pub.L. 91-604), and under the Federal Water Pollution Control Act, as amended (33 U.S.C. 1251 et seq., as amended by Pub.L. 92-500), Executive Order 11738, and regulations in implementation thereof (40 CFR 15) is not listed, on the date of contract award, on the U.S. Environmental Protection Agency (EPA) List of Violating Facilities pursuant to 40 CFR 15.20.

2. That the firm agrees to comply and remain in compliance with all the requirements of Section 114 of the Clean Air Act and Section 308 of the Federal Water Pollution Control Act and all regulations and guidelines listed thereunder.

3. That the firm shall promptly notify the SHA of the receipt of any communication from the Director, Office of Federal Activities, EPA, indicating that a facility that is or will be utilized for the contract is under consideration to be listed on the EPA List of Violating Facilities.

4. That the firm agrees to include or cause to be included the requirements of paragraph 1 through 4 of this Section X in every nonexempt subcontract, and further agrees to take such action as the government may direct as a means of enforcing such requirements.

XI. CERTIFICATION REGARDING DEBARMENT, SUSPENSION, INELIGIBILITY AND VOLUNTARY EXCLUSION

1. **Instructions for Certification - Primary Covered Transactions:**

(Applicable to all Federal-aid contracts - 49 CFR 29)

a. By signing and submitting this proposal, the prospective primary participant is providing the certification set out below.

b. The inability of a person to provide the certification set out below will not necessarily result in denial of participation in this covered transaction. The prospective participant shall submit an explanation of why it cannot provide the certification set out below. The certification or explanation will be considered in connection with the department or agency's determination whether to enter into this transaction. However, failure of the prospective primary participant to furnish a certification or an explanation shall disqualify such a person from participation in this transaction.

c. The certification in this clause is a material representation of fact upon which reliance was placed when the department or agency determined to enter into this transaction. If it is later determined that the prospective primary participant knowingly rendered an erroneous certification, in addition to other remedies available to the Federal Government, the department or agency may terminate this transaction for cause of default.

d. The prospective primary participant shall provide immediate written notice to the department or agency to whom this proposal is submitted if any time the prospective primary participant learns that its certification was erroneous when submitted or has become erroneous by reason of changed circumstances.

e. The terms "covered transaction," "debarred," "suspended," "ineligible," "lower tier covered transaction," "participant," "person," "primary covered transaction," "principal," "proposal," and "voluntarily excluded," as used in this clause, have the meanings set out in the Definitions and Coverage sections of rules implementing Executive Order 12549. You may contact the department or agency to which this proposal is submitted for assistance in obtaining a copy of those regulations.

f. The prospective primary participant agrees by submitting this proposal that, should the proposed covered transaction be entered into, it shall not knowingly enter into any lower tier covered transaction with a person who is debarred, suspended, declared ineligible, or voluntarily excluded from participation in this covered transaction, unless authorized by the department or agency entering into this transaction.

g. The prospective primary participant further agrees by submitting this proposal that it will include the clause titled "Certification Regarding Debarment, Suspension, Ineligibility and Voluntary Exclusion-Lower Tier Covered Transaction," provided by the department or agency entering into this covered transaction, without modification, in all lower tier covered transactions and in all solicitations for lower tier covered transactions.

h. A participant in a covered transaction may rely upon a certification of a prospective participant in a lower tier covered transaction that is not debarred, suspended, ineligible, or voluntarily excluded from the covered transaction, unless it knows that the certification is erroneous. A participant may decide the method and frequency by which it determines the eligibility of its principals. Each participant may, but is not required to, check the nonprocurement portion of the "Lists of Parties Excluded From Federal Procurement or Nonprocurement Programs" (Nonprocurement List) which is compiled by the General Services Administration.

i. Nothing contained in the foregoing shall be construed to require establishment of a system of records in order to render in good faith the certification required by this clause. The knowledge and information of participant is not required to exceed that which is normally possessed by a prudent person in the ordinary course of business dealings.

j. Except for transactions authorized under paragraph f of these instructions, if a participant in a covered transaction knowingly enters into a lower tier covered transaction with a person who is

suspended, debarred, ineligible, or voluntarily excluded from participation in this transaction, in addition to other remedies available to the Federal Government, the department or agency may terminate this transaction for cause or default.

* * * * *

Certification Regarding Debarment, Suspension, Ineligibility and Voluntary Exclusion--Primary Covered Transactions

1. The prospective primary participant certifies to the best of its knowledge and belief, that it and its principals:

a. Are not presently debarred, suspended, proposed for debarment, declared ineligible, or voluntarily excluded from covered transactions by any Federal department or agency;

b. Have not within a 3-year period preceding this proposal been convicted of or had a civil judgement rendered against them for commission of fraud or a criminal offense in connection with obtaining, attempting to obtain, or performing a public (Federal, State or local) transaction or contract under a public transaction; violation of Federal or State antitrust statutes or commission of embezzlement, theft, forgery, bribery, falsification or destruction of records, making false statements, or receiving stolen property;

c. Are not presently indicted for or otherwise criminally or civilly charged by a governmental entity (Federal, State or local) with commission of any of the offenses enumerated in paragraph 1b of this certification; and

d. Have not within a 3-year period preceding this application/proposal had one or more public transactions (Federal, State or local) terminated for cause or default.

2. Where the prospective primary participant is unable to certify to any of the statements in this certification, such prospective participant shall attach an explanation to this proposal.

* * * * *

2. **Instructions for Certification - Lower Tier Covered Transactions:**

(Applicable to all subcontracts, purchase orders and other lower tier transactions of $25,000 or more - 49 CFR 29)

a. By signing and submitting this proposal, the prospective lower tier is providing the certification set out below.

b. The certification in this clause is a material representation of fact upon which reliance was placed when this transaction was entered into. If it is later determined that the prospective lower tier participant knowingly rendered an erroneous certification, in addition to other remedies available to the Federal Government, the department, or agency with which this transaction originated may pursue available remedies, including suspension and/or debarment.

c. The prospective lower tier participant shall provide immediate written notice to the person to which this proposal is submitted if at any time the prospective lower tier participant learns that its certification was erroneous by reason of changed circumstances.

d. The terms "covered transaction," "debarred," "suspended," "ineligible," "primary covered transaction," "participant," "person," "principal," "proposal," and "voluntarily excluded," as used in this clause, have the meanings set out in the Definitions and Coverage sections of rules implementing Executive Order 12549. You may contact the person to which this proposal is submitted for assistance in obtaining a copy of those regulations.

e. The prospective lower tier participant agrees by submitting this proposal that, should the proposed covered transaction be entered into, it shall not knowingly enter into any lower tier covered transaction with a person who is debarred, suspended, declared ineligible, or voluntarily excluded from participation in this covered transaction, unless authorized by the department or agency with which this transaction originated.

f. The prospective lower tier participant further agrees by submitting this proposal that it will include this clause titled "Certification Regarding Debarment, Suspension, Ineligibility and Voluntary Exclusion-Lower Tier Covered Transaction," without modification, in all lower tier covered transactions and in all solicitations for lower tier covered transactions.

g. A participant in a covered transaction may rely upon a certification of a prospective participant in a lower tier covered transaction that is not debarred, suspended, ineligible, or voluntarily excluded from the covered transaction, unless it knows that the certification is erroneous. A participant may decide the method and frequency by which it determines the eligibility of its principals. Each participant may, but is not required to, check the Nonprocurement List.

h. Nothing contained in the foregoing shall be construed to require establishment of a system of records in order to render in good faith the certification required by this clause. The knowledge and information of participant is not required to exceed that which is normally possessed by a prudent person in the ordinary course of business dealings.

i. Except for transactions authorized under paragraph e of these instructions, if a participant in a covered transaction knowingly enters into a lower tier covered transaction with a person who is suspended, debarred, ineligible, or voluntarily excluded from participation in this transaction, in addition to other remedies available to the Federal Government, the department or agency with which this transaction originated may pursue available remedies, including suspension and/or debarment.

* * * * *

Certification Regarding Debarment, Suspension, Ineligibility and Voluntary Exclusion--Lower Tier Covered Transactions:

1. The prospective lower tier participant certifies, by submission of this proposal, that neither it nor its principals is presently debarred, suspended, proposed for debarment, declared ineligible, or voluntarily excluded from participation in this transaction by any Federal department or agency.

2. Where the prospective lower tier participant is unable to certify to any of the statements in this certification, such prospective participant shall attach an explanation to this proposal.

* * * * *

XII. CERTIFICATION REGARDING USE OF CONTRACT FUNDS FOR LOBBYING

(Applicable to all Federal-aid construction contracts and to all related subcontracts which exceed $100,000 - 49 CFR 20)

1. The prospective participant certifies, by signing and submitting this bid or proposal, to the best of his or her knowledge and belief, that:

a. No Federal appropriated funds have been paid or will be paid, by or on behalf of the undersigned, to any person for influencing or attempting to influence an officer or employee of any Federal agency, a Member of Congress, an officer or employee of Congress, or an employee of a Member of Congress in connection with the awarding of any Federal contract, the making of any Federal grant, the making of any Federal loan, the entering into of any cooperative agreement, and the extension, continuation, renewal, amendment, or modification of any Federal contract, grant, loan, or cooperative agreement.

b. If any funds other than Federal appropriated funds have been paid or will be paid to any person for influencing or attempting to influence an officer or employee of any Federal agency, a Member of Congress, an officer or employee of Congress, or an employee of a Member of Congress in connection with this Federal contract, grant, loan, or cooperative agreement, the undersigned shall complete and submit Standard Form-LLL, "Disclosure Form to Report Lobbying," in accordance with its instructions.

2. This certification is a material representation of fact upon which reliance was placed when this transaction was made or entered into. Submission of this certification is a prerequisite for making or entering into this transaction imposed by 31 U.S.C. 1352. Any person who fails to file the required certification shall be subject to a civil penalty of not less than $10,000 and not more than $100,000 for each such failure.

3. The prospective participant also agrees by submitting his or her bid or proposal that he or she shall require that the language of this certification be included in all lower tier subcontracts, which exceed $100,000 and that all such recipients shall certify and disclose accordingly.

NOTICE OF REQUIREMENTS FOR AFFIRMATIVE ACTION TO ENSURE EQUAL EMPLOYMENT OPPORTUNITY (EXECUTIVE ORDER 11246)

1. The Offeror's or Bidder's attention is called to the "Equal Opportunity Clause" and the "Standard Federal Equal Employment Opportunity Construction Contract Specifications" set forth herein.

2. The goals and timetables for minority and female participation, expressed in percentage terms for the Contractor's aggregate workforce in each trade on all construction work in the covered area, are as follows:

Timetables	Goals for female participation in each trade (percent)
From April 1, 1978 until March 31, 1979	3.1
From April 1, 1979 until March 31, 1980	5.1
From April 1, 1980 until March 31, 1981	6.9

Until further notice	Goals for minority participation for each trade (percent)
SHSA Cities:	
Pascagoula - Moss Point	16.9
Biloxi - Gulfport	19.2
Jackson	30.3
SMSA Counties:	
Desoto	32.3
Hancock, Harrison, Stone	19.2
Hinds, Rankin	30.3
Jackson	16.9
Non-SMSA Counties:	
George, Greene	26.4
Alcorn, Benton, Bolivar, Calhoun, Carroll, Chickasaw, Clay, Coahoma,Grenada, Itawamba, Lafayette, Lee, Leflore, Marshall, Monroe,Montgomery, Panola, Pontotoc, Prentiss, Quitman, Sunflower,Tallahatchie, Tate, Tippah, Tishomingo, Tunica, Union, Washington, Webster, Yalobusha	26.5
Attala, Choctaw, Claiborne, Clarke, Copiah, Covington, Franklin, Holmes, Humphreys, Issaquena, Jasper, Jefferson, Jefferson Davis, Jones Kemper, Lauderdale, Lawrence, Leake, Lincoln, Lowndes, Madison, Neshoba, Newton, Noxubee, Oktibbeha, Scott, Sharkey, Simpson, Smith, Warren, Wayne, Winston, Yazoo	32.0
Forrest, Lamar, Marion, Pearl River, Perry, Pike, Walthall	27.7
Adams, Amite, Wilkinson	30.4

These goals are applicable to all the Contractor's construction work (whether or not it is Federal or federally assisted) performed in the covered area. If the contractor performs construction work in a geographical area located outside of the covered area, it shall apply the goals established for such geographical area where the work is actually performed. With regard to this second area, the contractor also is subject to the goals for both its federally involved and nonfederally involved construction.

The Contractor's compliance with the Executive Order and the regulations in CFR Part 60-4 shall be based on its implementation of the Equal Opportunity clause, specific affirmative action obligations required by the specifications set forth in 41 CFR 60-4.3(a), and its efforts to meet the goals. The hours of minority and female employment and training must be substantially uniform throughout the length of the contract, and in each trade, and the Contractor shall make a good faith effort to employ minorities and women evenly on each of its projects. The transfer of minority or female employees or trainees from Contractor to Contractor or from project to project for the sole purpose of meeting the Contractor's goals shall be a violation of the contract, the Executive Order and the regulations in 41 CFR Part 60-4. Compliance with the goals will be measured against the total work hours performed.

3. The Contractor shall provide written notification to the Director of the Office of Federal Contract Compliance Programs within 10 working days of award of any construction subcontract in excess of $10,000 at any tier for construction work under the contract resulting from this solicitation. The notification shall list the name, address and telephone number of the subcontractor, employer identification number of the subcontractor, estimated dollar amount of the subcontract; estimated starting and completion dates of the subcontract; and the geographical area in which the subcontract is to be performed.

4. As used in this Notice, and in the contract resulting from this solicitation, the "covered area" is to the county and city (if any), stated in the advertisement.

5. The notification required in Paragraph 3 shall be addressed to the following:

Contract Compliance Officer
Mississippi Department of Transportation
P.O. Box 1850
Jackson, Mississippi 39215-1850

Mississippi Department of Transportation

Section 907

Bridge Widening Project
I-55 Lincoln County, Mississippi

Project No. IM-0055-01(097)/105877301

April 21, 2010

MISSISSIPPI DEPARTMENT OF TRANSPORTATION

SPECIAL PROVISION NO. 907-101 DB **CODE: (SP)**

DATE: 03/10/2009

SUBJECT: **Definitions and Terms**

Section 101, Definitions and Terms, of the 2004 Edition of the Mississippi Standard Specifications for Road and Bridge Construction is hereby amended as follows:

907-101.01--Abbreviations. Add the following to the list of abbreviations in Subsection 101.01 starting on page 1:

BV	Best Value
CPM	Critical Path Method
MCIA	Mississippi Concrete Industries Association
PPS	Project Payment Schedule
QA	Quality Assurance
QC	Quality Control
RCSR	Review Comment Summary and Resolution
RFC	Release for Construction
RFI	Request for Information
RFQ	Request for Qualifications
RFR	Request for Revision
SOQ	Statement of Qualifications
SOV	Statement of Values
VE	Value Engineering

907-101.02--Definitions. Add the following, or amend the following, to the list of definitions in Subsection 101.02 starting on page 3:

Best Value Proposal – means the Proposal provided by a Proposer that the Commission determines is (a) responsive to the RFP and (b) presents the best value for the Commission and MDOT as determined by the **Criteria for Scoring** of the RFP.

Bid – Bid is understood to mean Proposal throughout all documents.

Bidder – Bidder is understood to mean Proposer throughout all documents.

Daily Diaries - Daily reports, generated by Construction Manager required for reporting on weather, manpower, equipment, material deliveries, work activities, progress, problems, and whatever else is required by the Contract.

Contract – The written agreement between MDOT and the Contractor setting forth the obligations of the parties thereunder, including but not limited to, the performance of the Work, and the basis of payment. The Contract shall be composed of those documents described in Section 902, I. (Contract Documents).

Engineer - The Chief Engineer of MDOT, acting directly or through a duly authorized representative(s).

Final Completion Date – The date on which all Work specified in the Contract is complete, which is derived from adding the calendar days bid by the Contractor to the date of the Notice to Proceed.

Governmental Approval - Any authorization, consent, approval, action, license, lease, permit, certification, exemption, filing or registration by or with any Governmental Person.

Governmental Person - Any federal, state, local or foreign government, any political subdivision or any governmental, quasi-governmental, judicial, public or statutory instrumentality, administrative agency, authority, body or entity, excluding MDOT unless the context requires otherwise.

Inspector - The Contractor's or MDOT's authorized representative assigned to make detailed inspections of Contract performance.

Laboratory - The testing laboratory of the Contractor, MDOT or any other testing laboratory which may be designated by MDOT.

MDOT duly authorized representative -Those individuals or firms with specific authority to act for and on behalf of MDOT.

Milestone - An activity that represents a significant point in time, and may be used to indicate the start or end of a series of related activities and/or Contract accomplishment. A milestone has zero original and remaining duration, and does not increase the Contract time.

Project Documents - All written instruments associated with the Project including SOQ, RFP, Proposal, Agreement, Exhibits, referenced materials, design, and all documents produced to administer the Project including, but not limited to, all correspondence, changes, RFRs, RCSR, Request for Information, Submittals, etc.

Project Management Services - All planning, monitoring, controlling and reporting for Project activities and design including but not limited to, personnel, facilities, materials, computer systems and training for management of the Project as determined adequate by MDOT.

Project Payment Schedule – See Subsection 907-108.03.1.4.1 of the Special Provisions.

Project Scope - All responsibilities and tasks included in the RFP necessary to complete the Project and satisfy all requirements in the Contract including all associated work developed from the design, minor MDOT revisions, changed conditions, and contingencies that may be necessary for the Contractor to complete The Work not mentioned or included in the RFP.

Proposal – The offer of a Proposer, on the prescribed form, to perform the Work at the price and time quoted.

Proposal Date – Is the date designated in the RFP for submission of the Proposal to MDOT.

Proposal Form – The approved form on which the Department requires Proposals to be prepared and submitted for the Work.

Proposal Guaranty – A certified check, cashier's check, or Proposal bond furnished with the Proposal to

guarantee that the Proposer will enter into a Contract for the Work and furnish acceptable bond if the Contractor's Proposal is accepted.

Proposer - Includes a firm or firms, consortia, partnerships, joint ventures and other legal entity, which has been requested by the Mississippi Department of Transportation to submit a Proposal.

Review Comment Summary and Resolution (RCSR) – A written instrument to facilitate the disposition of reviewer comments of Contractor submittals.

Release for Construction - The written act of MDOT advising the Contractor it is allowed to proceed with construction, installation, manufacture or procurement according to the documents so released by MDOT, provided, however, Contractor shall none the less meet all requirements of this Contract.

Request for Information (RFI) - An RFI or information request is submitted by the Contractor to MDOT or duly appointed representative when information is needed concerning the Work. RFIs are answered by the appropriate party and returned to the Contractor with a response.

Request for Revision (RFR) - A written instrument for the Contractor to request a change to the Project scope identified in the RFP or the design developed during each Phase of the Project by the Contractor.

Resident or Project Engineer - The Engineer assigned by the Chief Engineer and bonded to the State to have the responsibility and authority for on-the-job administration.

Site – Shall mean any area within the Right-of-Way and additional areas that may designated in the Contract.

Stipend - Allowance paid for unsuccessful responsive Proposers.

Work –All design, engineering, quality control, procurement, construction, labor, supervision, testing, training and other services, equipment and materials provided or to be furnished and provided by Contractor necessary to achieve Final Acceptance of the Project in regard to which Notice To Proceed have been issued and all requirements in accordance with all the requirements of this Contract.

Working Drawings - Stress sheets, shop drawings, erection plans, falsework plans, framework plans, cofferdam plans, bending diagrams for reinforcing steel, or any other supplementary plans or similar data which the Contractor is required to submit.

Value Engineering – Proposed change to the Project Scope or design by MDOT or the Contractor that will reduce cost, increase quality and/or expedite the schedule.

907-101.03--Presumption. Delete Subsection 101.03 on page 13 and substitute the following.

907-101.03 – Blank.

MISSISSIPPI DEPARTMENT OF TRANSPORTATION

SPECIAL PROVISION NO. 907-102 DB **CODE: (SP)**

DATE: 03/10/2009

SUBJECT: Bidding Requirements and Conditions

Section 102, Bidding Requirements and Conditions, of the 2004 Edition of the Mississippi Standard Specifications for Road and Bridge Construction is hereby deleted in toto and replaced as follows:

907-102. 001–Blank.

907-102.01--Prequalification of Proposers. Prospective Proposers will be required to file with the Department a list of persons authorized to bind the company in all matters. Other information may be required from time to time before issuing Proposals.

The attention of prospective Proposers is directed to all fees and taxes required for the privilege of doing business within the State of Mississippi.

When two or more persons, firms or corporations are submitting a joint venture, each of the persons, firms or corporations may be required to comply with the above prequalification requirements.

907-102.02--Contents of Proposal Forms. The Proposal will identify the Project, state the location, describe the Work, and state the time in which the Work must be completed. The Proposal will also include special provisions and requirements which are not contained in the Standard Specifications or required modifications thereto.

All papers bound with, attached to, or designated for addition or substitution in the Proposal are considered a part thereof and must not be detached or altered when the Proposal is submitted. All documents designated in the Proposal shall be considered a part as if attached to and included in the Proposal.

907-102.03--Issuance of Proposal. The Department reserves the right to refuse to issue a Proposal to a prospective Proposer for the following reasons:

(a) Lack of competency and adequate machinery, plant, or other equipment, as revealed by the information obtained as provided in Subsection 907-102.01 or other determinations made by the Department.

(b) Uncompleted work which, in the judgment of the Department, might hinder or prevent the prompt completion of additional work if awarded.

(c) Failure to pay, or satisfactorily settle, all bills due for labor and material on former contracts in force at the time of issuance of Proposals.

(d) Unsatisfactory performance on previous contracts.

(e) Failure to promptly reimburse the Department for any overpayment that might have occurred.

(f) Debarment of a prospective Proposer or any of its corporate officers or principal owners by the Mississippi Transportation Commission.

907-102.04--Interpretation of Quantities. Determination of the quantities for the Work entailed by the Project Scope is the responsibility of the Contractor. Quantities are needed to determine the frequency of materials sampling and testing for quality control. Quantities are also needed for the Schedule of Values. All subsections within the MDOT Standard Specifications that establish the Method of Measurement and Basis of Payment for work performed is deleted. The single lump sum Contract Price submitted by the Contractor in response to the RFP shall constitute full and complete compensation for all Work.

907-102.05--Examination of Specifications, Special Provisions, Notices to Proposers and Site of Work. The Proposer is required to examine carefully the site of the proposed Work, the Request for Proposal (RFP), specifications, special provisions, notices to Proposers and contract forms before submitting a Proposal.

MDOT has made available or provided to the Contractor information that MDOT acquired prior to the date of this Contract in the course of planning for the construction of the Project, which information is hereinafter collectively called "Informational Documents."

MDOT hereby specifically disclaims any implication that it has made any such representation or warranty either express or implied, as to any matter whatsoever, by virtue of the fact that it is making the Informational Documents available to Contractor. Further, MDOT is not representing that the Informational Documents are exhaustive, complete, accurate or sufficient for design or construction of the Project. Contractor agrees that it has full responsibility for the design and construction of the Project and Contractor specifically acknowledges and agrees that the Informational Documents are preliminary and conceptual in nature.

The submission of a Proposal shall be considered prima facie evidence that the Proposer has made such an examination and is satisfied as to the conditions to be encountered in performing the Work at the Project site and as to the requirements of the Informational Documents, standard specifications, Request for Proposal, special provisions, Contract, and the Federal, State, and local laws which will in any way affect the execution of the Work. All Contracts are subject to the provisions of Sections 65-1-89 and 65-1-91, Miss. Code Ann. (1972).

907-102.06--Preparation of Proposal. Proposals are to be prepared in accordance with the requirements set forth in the Request for Proposal issued by the Department. All the figures shall be in ink or typed. It is the responsibility of every Proposer to check for any addendum or modification to the Contract document(s). It shall be the Proposer's responsibility to be sure they are in receipt of all addenda, meeting information, and/or questions and answers provided at, or subsequent to, the pre-Proposal meeting, if any are issued.

Each Proposal issued will contain duplicate Certification regarding debarment, suspension, and other responsibility matters to be completed by the Proposer. The Certification must be sworn to and shall be under penalty of perjury and Proposers are cautioned to read and understand its contents in entirety before execution. The Contractor shall provide immediate written notice to the Contract Administration Engineer at any time, prior to or after award, that it is known a certification was erroneous when executed or has become erroneous by reason of changed circumstances.

Failure on the part of the Proposer to execute the Certification will result in the Proposal being considered nonresponsive.

The Proposer's Proposal must be signed with ink by the individual, by one or more members of the partnership, by one or more members or officers of each firm representing a joint venture, or by one or more officers of a corporation; or by an agent of the Contractor legally qualified to bind the Contractor and acceptable to the State. If the Proposal is made by an individual, the individual's name and address must be shown; by a partnership, the name and address of each partnership member must be shown; as a joint venture, the name and address of each member or officer of the firms represented by the joint venture must be shown; by a corporation, the name of the corporation and the business address of its corporate officials must be shown.

The address stated on the Proposal shall be the Proposer's permanent address until changed by written notice to the Executive Director. All notices provided for in the Contract shall be considered as delivered to the Contractor when mailed or delivered to such address.

907-102.07--Irregular Proposals. Proposals will be considered irregular and may be rejected for any of the following reasons:

(a) If the Proposal is on a form other than that furnished by the Department, or if the form is altered or any part thereof is detached, except as allowed in Subsection 907-102.06.

(b) If there are unauthorized additions, conditional or alternate Proposals or irregularities of any kind which may tend to make the Proposal incomplete, indefinite, or ambiguous as to its meaning.

(c) If the Proposer adds any provisions reserving the right to accept or reject an award, or to enter into a Contract pursuant to an award.

(d) If the Proposal, does not contain acknowledgement of receipt and addition to the Proposal and Contract documents of all addenda issued prior to opening of Proposals.

(e) Failure to execute required affidavits, certificates, etc., and furnish Proposal guaranty.

(f) The Mississippi Transportation Commission reserves the right to reject any or all Proposals, to waive technicalities or irregularities, or to advertise for new Proposals, and the decision of the Commission to reject any Proposal shall not be cause for any liability or damage against the Commission, the Department, any of its officers, duly appointed representatives or employees.

907-102.08--Proposal Guaranty. No Volume 2 Proposal will be considered unless accompanied by certified check, cashier's check or bond, made payable to the State of Mississippi, in an amount of not less than five percent of the total amount of the Proposal offered. Proposal bond shall not be conditioned in any way to modify the minimum five percent (5%) required. Proposals that fail to include a Proposal Guaranty shall be deemed nonresponsive and will be rejected by MDOT. The guaranty shall be evidence of good faith that, if awarded the Contract, the Proposer will execute the Contract and give Contract bond as stipulated in Subsection 907- 103.05 and as required by law. The Proposal Guaranty amount should not include the dollar amount determined for the Contract Time (Part B).

If a bond is offered as guaranty, the bond must be on a form approved by the Executive Director, made by a Surety acceptable to the Executive Director and signed or countersigned by a qualified Mississippi resident agent or qualified nonresident agent and the Proposer.

907-102.08.1--Bonding. The successful Proposer shall provide MDOT with the following bond within ten (10) calendar days of being awarded the Project:

(a) A Performance Bond, or bonds in a sum equal to the full amount of the Contract. In the event of award of a joint Proposal, each individual, partnership, firm or corporation shall assume jointly the full obligations under the Contract and Contract bond. The form of the bond(s) shall be that provided by or acceptable to the Department. The bond(s) shall be negotiated for, procured from and the premium paid to a qualified Mississippi resident agent or qualified nonresident agent of the Surety. The bond shall be signed or countersigned by a Mississippi resident agent or qualified nonresident agent and also bear the signature of an "attorney-in-fact" of the surety. Reference is made to Section 31-5-51 *et seq* of the Mississippi Code of 1972, Annotated, and other State statutes applicable thereto.

Bond(s) must be issued by a Surety with the Best's rating of at least "A" or better and Financial Size Category of VIII or better by A.M. Best Co. The Surety shall be registered with the Mississippi State Insurance Commissioner.

907-102.09--Delivery of Proposals. Unless otherwise specified, Volume 2 Proposals shall be submitted sealed in a special envelope furnished by the Department. The blank spaces on the envelope shall be filled in correctly to clearly indicate its contents. When an envelope other than the special one furnished by the Department is used, it shall be of the same general size and shape and be similarly marked to clearly indicate its contents. Proposal Forms are nontransferable and no name or names of interested parties may be shown other than those to whom the Proposal was issued. When sent by mail, the sealed Proposals shall be mailed to the Department at the address and in care of the official in whose office the Proposals are to be received. All Proposals shall be submitted prior to the time and place specified in the Request for Proposals (RFP). Proposals received after the time set forth in the RFP will be returned to the Proposer unopened.

907-102.10--Blank

Delete Subsections 102.11 and 102.12 on pages 20 and 21 and substitute the following:

907-102.11--Blank

907-102.12--Blank

Delete Subsection 102.13 on page 21 and substitute the following:

907-102.13--Disqualification of Proposers. In addition to those matters set forth in Section 102.07 regarding Irregular Proposals, either of the following reasons may be considered as being sufficient for the disqualification of a Proposer and the rejection of the Proposer's submitted Proposal or Proposals:

(a) More than one Proposal for the same work from an individual, partnership, firm or corporation under the same or different name(s).

(b) Evidence of collusion among Proposers. Participants in such collusion will receive no recognition as Proposers for any future work of the Department until reinstated as a qualified Proposer.

MISSISSIPPI DEPARTMENT OF TRANSPORTATION

SPECIAL PROVISION NO. 907-103 DB **CODE: (SP)**

DATE: 03/10/2009

SUBJECT: Award and Execution of Contract

Section 103, Award and Execution of Contract, of the 2004 Edition of the Mississippi Standard Specifications for Road and Bridge Construction is hereby deleted in toto and replaced as follows:

SECTION 907-103—AWARD AND EXECUTION OF CONTRACT

907-103.01--Consideration of Proposals. After the Proposals are opened and read, they will be compared on the basis of the criteria set for in the Request for Proposal (RFP).

907-103.02--Award of Contract. The award of a Contract, if awarded, will be made within 60 calendar days after the opening of Proposals to the Proposer with the Best Value Proposal and whose Proposal complies with all the requirements prescribed. The award of contracts involving the expenditure of Federal funds is contingent upon concurrence of the FHWA. The successful Proposer will be notified of the award by letter mailed to the address shown on the Proposal.

907-103.03--Cancellation of Award. The Department reserves the right to cancel the award of a contract any time prior to the execution by all parties without liability against the Commission, Department, or any of its officers or employees.

907-103.04--Return of Proposal Guaranty. The retained Proposal Guaranty of the Proposers will be returned in accordance with the following:

i. If a contract is executed with the Best Value Proposer, then the remaining Proposers will receive their Proposal Guaranty within 10 days.

ii. If the Best Value Proposer fails to execute a contract, then the Proposal Guaranty will be forfeited in accordance with Section 103.08.

iii. If the Commission elects to negotiate a contract with the next responsive Best Value Proposer(s), then the same procedure as defined above will be followed.

In the event no award is made within 30 days after the opening of the Proposals, the Executive Director may permit the Proposer to replace the certified check or cashier's check with a satisfactory Proposer's bond.

Should no award be made within 60 calendar days, all Proposals will be rejected and all guaranties returned unless the Best Value Proposer, at the request of the Commission, agrees in writing to a longer delay.

907-103.05--Requirement of Contract Bond. Prior to the execution of the contract, the Best Value Proposer shall execute and deliver to the Executive Director a Contract bond or bonds in a sum equal to the full amount of the Contract. In the event of award of a joint Proposal, each individual, partnership, firm or corporation shall assume jointly the full obligations under the Contract and Contract bond. The form of the bond(s) shall be that provided by or acceptable to the Department. The bond(s) shall be

negotiated for, procured from and the premium paid to a qualified Mississippi resident agent or qualified nonresident agent of the Surety. The bond shall be signed or countersigned by a Mississippi resident agent or qualified nonresident agent and also bear the signature of an "attorney-in-fact" of the Surety. Reference is made to Section 31-5-51 *et seq* of the Mississippi Code of 1972, Annotated, and other State statutes applicable thereto.

907-103.06—Escrow Proposal Documents. The purpose of this specification is to preserve the Proposer's Proposal documents for the use by MDOT in the resolution of any claim or dispute between MDOT and the Contractor either during or after construction. Within two (2) business days following submittal of the Volume 2 Proposal documents, the Contractor shall have delivered into escrow the original of all documents used in preparation of its Volume 2 Proposal for the Project (the "Escrowed Proposal Documents" or "EPD")

Upon execution of the Contract, the unsuccessful Proposers will be notified by the Commission in writing the escrowing of Proposal documents will no longer be required.

The EPD of the successful Proposer will be held in escrow until all of the following have occurred: (a) 180 days have elapsed from the date of the final Contract voucher certification, (b) all disputes regarding this Contract have been settled, and (c) final payment on this Contract has been made by MDOT and accepted by the Contractor.

The EPD shall be available during business hours for joint review by representatives of the Contractor, FHWA and MDOT in connection with the resolution of disputes. The EPD are, and shall always remain, the property of the Contractor, subject to MDOT's right to review the EPD as provided herein. Copies of the EPD shall be provided to the courts of the State of Mississippi and other dispute resolvers upon request of MDOT. The Contractor shall have the right to seek a protective order governing the disclosure of the EPD to parties other than MDOT. The Contractor represents and warrants that the EPD delivered into escrow prior to execution hereof constitute all of the information used in preparation of its Proposal and agrees that no other Proposal preparation information will be considered in resolving disputes or claims related thereto, including in any judicial proceeding to resolve such disputes or claims. The Contractor also agrees that the EPD are not part of this Contract and that nothing in the EPD shall change or modify this Contract.

The Contractor represents and warrants that:

(a) the EPD clearly itemize the estimated costs of performing the Work required by the Contract provisions, all work is separated into sub-items as required to present a complete and detailed estimate of all costs, crews, equipment, quantities, and rates of production are detailed;

(b) estimates of costs are divided into Contractor's usual cost categories such as direct labor, repair labor, equipment ownership and operation, expendable materials, permanent materials and subcontract costs as appropriate, plant and equipment and indirect costs are detailed in the Contractor's usual format, and the Contractor's allocation of plant equipment, indirect costs, contingencies, markup and other items such as overhead and profit to each direct cost item shall be clearly identified;

(c) the EPD include all assumptions, quantity takeoffs, rates of production and progress calculations, quotes for Subcontractors and suppliers, memoranda, narratives and all other information used by the Contractor to arrive at the Contract Price.

It is not intended that the Contractor perform any significant extra work in the preparation of the EPD prior to delivery thereof into escrow. However, the Contractor represents and warrants that the EPD provided prior to execution of this Contract were personally examined prior to delivery to escrow by authorized officers of the Contractor and that they meet the requirements of herein and are adequate to enable a complete understanding and interpretation of how the Contractor arrived at its Proposal. Prior to execution of this Contract representatives of MDOT and the Contractor shall jointly review the EPD to determine whether it is complete, and shall organize the EPD and label each page so that it is obvious that the page is a part of the EPD and so as to enable a person reviewing a page out of context to determine where it can be found within the EPD. The representatives shall also complete an index listing each document included in the EPD and briefly describe the document and its location in the EPD. This index and document description shall be kept with the EPD. In the event that, following the initial organization, MDOT determines that the EPD is incomplete, MDOT may request the Contractor to supply data to make the EPD complete. The Contractor shall provide all such date within three business days of the request, and at that time it will be date stamped, labeled to identify it as supplementary EPD information, and added to the EPD. The Contractor shall have no right to add documents to the EPD except upon MDOT's request.

The EPD shall at all times be treated as proprietary and confidential information and shall be used only for purposes described in herein. Failure or refusal to provide Proposal documentation shall delay execution of the Contract or may be cause for forfeit.

The cost of the escrow will be borne by the Contractor. The Contractor will provide escrow instructions to the selected repository of EPD's or banking institution located in Jackson, Mississippi, consistent with this specification.

907-103.07--Execution and Approval of Contract. The Best Value Proposer to whom the Contract has been awarded shall sign and file with the Executive Director, the Contract and all documents required by the Contract within 10 days after the Contract has been awarded. The Contract may require certain documents be submitted at an earlier date, in which case, those documents shall be submitted within the time frame specified. No Contract is in effect until it is executed by all parties.

907-103.08--Failure to Execute Contract. Failure of the Proposer to execute the Contract and file acceptable bond and/or other required documents within 10 days shall be just cause for the cancellation of the award and forfeiture of the Proposal Guaranty which shall become the property of the Department, not as a penalty but in liquidation of damages sustained. Award may then be made to the next responsive Best Value Proposer, or the Work may be re-advertised at the discretion of the Department.

MISSISSIPPI DEPARTMENT OF TRANSPORTATION

SPECIAL PROVISION NO. 907-104 DB **CODE: (SP)**

DATE: 03/10/2009

SUBJECT: Scope of Work

Section 104, Scope of Work, of the 2004 Edition of the Mississippi Standard Specifications for Road and Bridge Construction is hereby amended as follows:

Delete Subsection 104.01 on page 24 and substitute the following:

907-104.01--Intent of Contract. The intent of the Contract is to provide for the execution, design, construction, and completion in every detail of the Work described, and to compensate the Contractor for all acceptable work performed in accordance with the provisions of the Contract. The Contractor shall furnish all labor, materials, equipment, supplies, transportation, supervision, quality control, methods and procedures necessary to complete the Work in accordance with the terms of the Contract.

907-104.01.1--Partnering Process

COVENANT OF GOOD FAITH AND FAIR DEALING:

This Contract imposes an obligation of good faith and fair dealing in its performance and enforcement.

The Contractor and the Department, with a positive commitment to honesty and integrity, agree to the following mutual duties:

A. Each will function within the laws and statutes applicable to their duties and responsibilities.

B. Each will assist in the other's performance.

C. Each will avoid hindering the other's performance.

D. Each will proceed to fulfill its obligations diligently.

E. Each will cooperate in the common endeavor of the Contract.

VOLUNTARY PARTNERING:

The Mississippi Department of Transportation encourages the foundation of a cohesive partnership with the Contractor and its principal subcontractors and suppliers. This partnership will be structured to draw on the strengths of each organization to identify and achieve reciprocal goals. The objectives are effective and efficient Contract performance and completion within budget, on schedule, and in accordance with the Contract.

This partnership will be bilateral in make-up, and participation will be totally voluntary. Any cost associated with effectuating this partnering will be agreed to by both parties and will be shared equally.

To implement this partnering initiative prior to starting of the Work in accordance with the requirements of Subsection 907-108.02 Notice to Proceed and prior to the pre-construction conference, the

Contractor's management personnel and MDOT's District Engineer, will initiate a partnering development seminar/team building workshop. The Contractor working with the assistance of the District and the State Construction Engineer will make arrangements to determine attendees for the workshop, agenda of the workshop, duration, and location. Persons required to be in attendance will be the MDOT key project personnel including MDOT's duly authorized representative, the Contractor's Key Individuals of both the prime and principal subcontractors and suppliers. The Contractor's design engineers, MDOT design engineers and FHWA will be also be invited to attend as necessary. The Contractor and MDOT will also be required to have Regional/District and Corporate/State level managers on the Project team.

Follow-up workshops may be held periodically throughout the duration of the Contract as agreed by the Contractor and MDOT.

The establishment of a partnership charter on this Project will not change the legal relationship of the parties to the Contract nor relieve either party from any of the terms of the Contract.

Delete Subsections 104.02, 104.02.1, 104.02.2, and 104.02.3 beginning on page 24 and substitute the following:

907-104.02--Alterations of Plans or Character of Work. Except as may be necessary to satisfactorily complete the Contract, no alterations of the plans or the nature of the Work will involve work beyond the termini of the contemplated construction without modification of the Contract and approval by all parties concerned.

The Department reserves the right to make, in writing, at any time during the Work, such alterations in the Work as are necessary to satisfactorily complete the Project. Such changes and alterations shall neither invalidate the Contract nor release the Surety, and the Contractor agrees to perform the Work as altered.

Wherever in the Specifications a supplemental agreement is provided for, such supplemental agreement must be approved by the Commission and spread upon its minutes prior to execution by the Executive Director.

907-104.02.1--Blank.

907-104.02. 2--Blank

907-104.02. 3--Blank

Delete Subsection 104.03 on page 27 and substitute the following.

907-104.03--Extra Work. If the Engineer determines that authorized extra work changes the Project Scope of the original Contract, an adjustment will be made to the Contract.

The basis for any allowable price adjustment will be a negotiated amount or, in lieu of negotiations or other agreement, an amount based on the sum of actual labor, material, equipment, insurance, bond, tax, etc. costs computed in accordance with Section 902 Subsection III Contract Price/Contract Payments, B.1.

The basis for any allowable time adjustment will be the amount of time that the change in Project Scope

affects completion of critical activities of the critical path method (CPM) in Subsection 907-108.03.1.

Delete Subsection 104.04 beginning on page 27 and substitute the following:

907-104.04--Maintenance of Traffic. Unless otherwise provided, the road under construction and all other roads and entrances to adjacent property within the Project Right of Way will be kept open to through and local traffic.

The Contractor shall keep the portion of the Project being used by public traffic in satisfactory condition for traffic to be adequately accommodated. The Contractor shall also provide and maintain in a safe condition temporary approaches or crossings and intersections with trails, roads, streets, businesses, parking lots, residences, garages, and farms.

On any facility on which traffic is maintained, mowing shall be performed as necessary as determined by the Construction Quality Control Manager to provide reasonable appearance and safety to the traveling public. Mowing shall be performed at the direction and satisfaction of the Construction Quality Control Manager, and shall include those areas from the edge of the pavement to a minimum of five feet beyond the shoulder line.

Two, minimum width of eleven (11) feet, lanes shall be open to traffic at all times except during temporary closures of small portions of the Project as deemed necessary to expedite the Work without compromising the convenience and safety of traffic. Temporary lane closures shall **NOT** be permitted during mandatory hurricane evacuation orders.

The Contractor shall be bound by the provisions of this subsection and other applicable provisions of the Contract with regard to the safe and convenient passage of traffic.

In the case of a project for improvements or construction alongside an existing roadway on which traffic is required to be maintained, no equipment, vehicles or materials will be permitted to park or be stored within the clear/safety zone of the roadway unless it is behind a lane or shoulder closure. Unless working under an approved nighttime operation, the Contractor shall not perform any work within the clear/safety zone of the roadway between sunset and sunrise.

The Contractor shall not obstruct any traffic facility or connection thereto which is officially opened to public or private traffic or required under the Contract to be maintained except as permitted in writing by the Engineer on the basis that other suitable provisions have been made.

The Contractor will be required to restore and/or maintain traffic caused by snow, ice, major flooding, landslide or phenomenon of nature such as an earthquake, hurricane, tornado, etc. If the Engineer orders such special maintenance of traffic for the benefit of the traveling public, the ordered work shall be accomplished as provided in Subsection 907-104.03.

Unsatisfactory maintenance of traffic shall be subject to the procedures provided in Subsection 907-105.15.

Delete Subsection 104.05 beginning on page 29 and substitute the following:

907-104.05--Removal and Disposal of All Materials from the Project. The Contractor shall remove and dispose of all existing structures and obstructions in accordance with the provisions of Section 202 and the Special Provisions.

All existing structures and obstructions or residual portions of structures and obstructions not designated to remain are to be removed and disposed of by the Contractor.

When materials are to be removed and disposed of at locations provided by the Contractor, the Contractor shall furnish the Engineer a copy of a release from each property owner for the servitude of the land. The Contractor shall also furnish the Engineer a certified letter stating that the area of disposal is not in a wetland. The State, the Commission, the Department, or any of its officers, duly appointed representatives or employees will have no ownership or liability whatsoever for materials or matter removed thus from the right-of-way.

.

All removals by the Contractors are to be made in accordance with the provisions of Section 201, Section 202 and Section 203.

Delete Subsection 104.06 on page 30 and substitute the following:

907-104.06--Use of Materials Found in the Work. It is understood that the title to all materials found within the Project Right of Way or easements remains with State.

However, the Engineer may permit the Contractor to use stone, gravel, sand and other suitable materials found within the grading limits that may be useful in fulfillment of the Contract requirements. The excavation material, so removed and needed for use in embankments, backfills, approaches, or otherwise in the Work, shall be replaced by the Contractor with other material acceptable to the Engineer all at no cost to MDOT.

Delete Subsection 104.08 beginning on page 31 and substitute the following:

907-104.08--Value Engineering Incentive. Value Engineering Incentive applies to any cost reduction proposal initiated and developed by the Contractor for the purpose of refining the Contract documents or to significantly improve the quality of the final product. This subsection does not apply unless a proposal is identified by the Contractor at the time of submission as a Value Engineering Incentive Proposal. The Department shall be the sole judge of the acceptability of any such proposal and of the estimated net savings in design and construction costs from adoption of all or any part of such proposal.

Cost reduction proposals approved by the Department are to be implemented by a supplemental agreement to the Contract and must result in savings without impairing any essential functions and characteristics such as safety, service life, reliability, economy of operations, ease of maintenance, aesthetics and necessary standard design features. As a minimum, the Contractor shall submit the following information with each proposal:

(c) A statement that the proposal is submitted as a Value Engineering Incentive Proposal;

(d) Description of the proposal;

(e) Narrative on the Contract requirements which will require modification including a recommendation for each change;

(f) Estimated cost reductions;

(g) Prediction of any effects on other costs to the Department;

(h) Recommended implementation timeframe with supporting data for maximizing cost

reduction during the remainder of the Contract; and

(i) A statement as to the anticipated effect on the project completion date.

The Commission, the Department or any of its officers, duly appointed representatives or employees will not be liable for any delay in acting upon a proposal. The decision of the Engineer as to acceptance of any such proposal will be final and shall not be subject to Subsection 105.17. The Department may accept the proposal, in whole or in part, by executing a supplemental agreement that will specifically state that, it is executed pursuant to these provisions. Such agreement will incorporate the necessary changes or additions to the Contract documents to permit the proposal or accepted part thereof to be put into effect. If conditional, it will include conditions upon which the Department's approval is based. The agreement will also set forth the estimated net savings attributable to the proposal and will further provide that the Contractor be paid fifty percent (50%) of said savings. For those Value Engineering proposals submitted by the Department, the Contractor will be paid fifty percent (50%) of the savings. The cost to the Department in evaluating the proposal will be considered in determining the estimated net savings. The Contractor's share of the savings shall constitute full compensation for the Value Engineering Incentive Proposal.

Approval of the proposal and performance of the work thereof shall not change the Contract completion date unless specifically provided for in the supplemental agreement implementing the proposal.

The Contractor may request that the Department not use or disclose the information submitted with a proposal and such request may be honored for the extent allowed by law. Such restriction must be in writing and submitted with the proposal. If the proposal is accepted, this restriction shall be void and the Department may use, duplicate or disclose any data necessary to utilize such proposal. The executed supplemental agreement implementing the proposal will become public information in the files of the Department.

MISSISSIPPI DEPARTMENT OF TRANSPORTATION

SPECIAL PROVISION NO. 907-105 DB **CODE: (SP)**

DATE: 03/10/2009

SUBJECT: Control of Work

Section 105, Control of Work, of the 2004 Edition of the Mississippi Standard Specifications for Road and Bridge Construction is hereby amended as follows:

Delete Subsection 105.01 beginning on page 32 and substitute the following:

907-105.01--Authority of the Engineer. The Engineer will decide all questions which may arise as to the quality and acceptability of materials, the Work and the progress of the Work; all questions which may arise as to the interpretation of the plans and specifications; and all questions as to the fulfillment of the Contract.

The Engineer will have the authority to suspend the Work wholly or in part and to withhold payments because of the Contractor's failure to correct conditions unsafe for the general public, for failure to carry out provisions of the Contract, or for failure to carry out orders. The Engineer may authorize, in writing, the continued prosecution of Work activities past their specified seasonal limits when it is determined that the quality of the Work will not be reduced and the public interest will be best served.

The Engineer will have authority to enforce and make effective all decisions and orders relating to the Contract.

Delete Subsection 105.02 on page 33 and substitute the following:

907-105.02--Plans, Shop Drawings, and Working Drawings. The Contractor shall have one copy of the Proposal and Contract documents and one half-scale copy of the plans available at all times during Work activity on the Project.

Plans will generally show details of the Work to be performed and a summary of the estimated quantities. The plans will be supplemented by shop drawings or working drawings as necessary to adequately control the Work. Shop drawings or working drawings shall be furnished by the Contractor as required for the completion of the Work. Shop drawings or working drawings shall not be considered as plan changes and any conflicts on shop drawings or working drawings, shall not supersede the requirements of the Released for Construction (RFC'd) plans and specifications. If required, the Contractor shall furnish to the Engineer the original tracings of shop drawings or working plans in the format desired by the Engineer.

The contract price shall include the cost of furnishing all shop drawings or working drawings including all revised drawings that may be required in the event design details of the plans are changed.

Delete Subsection 105.03 beginning on page 33 and substitute the following:

907-105.03--Conformity with plans and Specifications. All work performed and all materials furnished shall be in reasonably close conformity with the lines, grades, cross-sections, dimensions, material requirements and other construction requirements shown on the plans or required by the

specifications.

In the event the Engineer finds the materials or the finished product in which the materials are used not within reasonably close conformity with the plans and specifications the Contractor's Lead Design Engineer shall submit a recommendation to the Engineer as to whether the Work should be accepted and remain in place or removed and replaced. If the Engineer allows the Work to remain in place, an appropriate adjustment in the contract price for the work or materials will be made in accordance with the contract.

When the materials, the finished product or the work are not in reasonably close conformity with the plans and specifications and have resulted in an inferior, unsatisfactory or unacceptable product, the work or materials shall be removed and replaced or otherwise corrected by the Contractor.

When work is of a temporary nature and its use is expected to be of short duration, the Engineer may allow minor deviations, not more than five percent (5%), from specified test values. Any such allowance will not relieve the Contractor from responsibility for maintenance of the work.

Delete Subsection 105.04 beginning on page 34 and substitute the following:

907-105.04--Coordination of Specifications, Supplemental Specifications, Special Provisions and Request for Proposal (RFP). The Standard Specifications, special provisions, Notice to Proposers, Request for Proposal, Contractor's Proposals and all other supplemental documents are essential parts of the Contract, and a requirement occurring in one Contract Document is as binding as though occurring in all. They are intended to be complementary and provide for a complete Work. In case of discrepancy, calculated dimensions will govern over scaled dimensions. In case of conflict, the order of precedence of Contract documents shall be according to SECTION 902 Subsection I. CONTRACT DOCUMENTS.

Any reference in the Contract documents to a particular Section or Subsection shall mean that Section or Subsection of the Mississippi Standard Specifications for Road and Bridge Construction, or that Section or Subsection as modified by the Contract.

The Contractor shall not take advantage of any apparent error or omission in the Contract requirements. When the Contractor discovers an error or omission, the Engineer shall be immediately notified. The Contractor will then make corrections utilizing the RFR process described in the Technical Requirements Section 2.2.6 and interpretations deemed necessary for fulfilling the intent of the Contract.

Delete Subsection 105.05 on page 35 and substitute the following:

907-105.05--Cooperation by Contractor. The Contractor shall give the Work the attention necessary to expedite its progress, and shall cooperate with the Department, its duly authorized representatives and other Contractors in every possible way.

The Contractor shall have a competent and experienced full time resident Project Director who is capable of reading and understanding the plans and specifications for the particular work being performed. The Project Director shall receive instructions from the Engineer or duly authorized representative. Upon issuance of the Notice of Award, the Contractor or duly appointed agent authorized to bind the Contractor shall file with the Engineer the name and address of the Project Director who will supervise the Work. The Engineer shall be immediately notified in writing when a change is requested in the Contract's Project Director or Project Director's address. The Project Director shall not be changed without MDOT's approval. The Project Director shall have full authority to execute orders or directives of the

Engineer without delay and to promptly supply materials, equipment, labor and incidentals as may be required. Such Project Director shall be furnished irrespective of the amount of work sublet.

The Project Director shall advise the Engineer of an intended absence from the Work and designate a person to be in charge of the Work during such absence.

The Contractor shall also designate a responsible person, whose primary duty shall be to monitor and maintain the effectiveness of the erosion control plan, including NPDES permit requirements. This person must be a Certified Erosion Control Person defined as a person certified in erosion control by an organization approved by MDOT. Prior to or at the pre-construction conference the Contractor shall designate to the Engineer in writing the Certified Erosion Control Person. The designated Certified Erosion Control Person shall be assigned to only one (1) project, unless the Contractor has adjoining projects or another project in close proximity. If either of these cases exist the Contractor may request in writing that the State Construction Engineer approve the use of one (1) Certified Erosion Control Person for both projects. The Contractor may request in writing that the Engineer authorize a substitute Certified Erosion Control Person to act in the absence of the Certified Erosion Control Person. The substitute must also be a Certified Erosion Control Person. A copy of the Certified Erosion Control Person's and the substitutes', if used, certification must be included in the Contractor's Protection Plan as outlined in Subsection 907-107.22.1. The Engineer shall be furnished with the telephone numbers where the Contractor's responsible person and a substitute, authorized to act in the absence of the responsible person, may be reached at all times when not on the Project.

Delete Subsection 105.06 on pages 35 and 36 and substitute the following:

907-105.06--Blank.

Delete Subsection 105.07 beginning on page 36 and substitute the following:

907-105.07--Cooperation Between Contractors. MDOT reserves the right to award contracts for work on or near work covered by other contracts. Each contractor will be expected to cooperate with the other contractor(s) and MDOT in every reasonable manner.

MDOT will make a determination as to the practicality of prosecuting an existing contract before an additional award is made for work in the same area. Insofar as is practicable, MDOT will give notice of the intent to award subsequent contracts in the same area. Failure to do so, however, shall not prejudice the rights of Commission to award additional contracts and shall not constitute grounds for claims against the State, Commission, MDOT or any of its officers or employees.

When separate contracts are let for work, any part or all of which is within the same limits, each contractor's work shall be conducted so as to cause the least interference with work being performed by the other contractor(s).

When contracts are awarded to separate Contractors for concurrent construction within a common area, the Contractors, in conference with the Engineer, shall establish a written joint schedule of operations. Such schedule will set out approximate dates and sequences for work to be performed with due regard to needs and contract time imitations of each contract. The Engineer may allow modification of the schedule when mutual benefit to the Contractors and the Engineer will result. Any modification of the joint schedule shall be in writing, mutually agreeable, and signed by the Contractors. Failure of either

Contractor to abide by the terms of the joint schedule or modified schedule will be justification for termination of the Contract under the provision of Subsection 907-108.08.

Each Contractor's work shall be arranged such that the placement and disposal of the materials and equipment being used shall not interfere with the operations of the other Contractor. Each contractor shall join their work with that of others in an acceptable manner and perform it in the sequence of the established schedule. Each Contractor involved shall assume all liability, financial and otherwise, in connection with each contract and shall protect and save harmless Commission, MDOT or any of its officers, duly authorized representatives, or employees from all damages or claims that may arise because of inconvenience, delay or loss experienced because of the presence and operations of the other Contractor(s) working within the same Contract limits.

Delete Subsection 105.08 beginning on page 37 and substitute the following:

907-105.08--Construction Stakes, Lines and Grades. The Contractor will set construction stakes establishing lines, slopes, and profile grades in road work and establish all centerline and benchmarks for bridge work. The Contractor will also provide all necessary information relating to lines, slopes, and grades. These stakes and benchmarks shall constitute the field control by which the Contractor shall establish and maintain all necessary controls and perform the Work. Any corrective work caused by inaccurate field controls established by the Contractor will be performed in a manner satisfactory to the Engineer and at no additional cost to MDOT.

Delete Subsection 105.09 on page 38 and substitute the following.

907-105.09-- Blank.

Delete Subsection 105.10 on page 38 and substitute the following:

907-105.10--Duties of the Inspector. Inspectors assigned by the Engineer or duly authorized representative will be authorized to inspect all work and materials for compliance with the Contract requirements. The inspection may extend to all parts of the Work and to the preparation, fabrication or manufacture of the materials. The inspector will not be authorized to alter or waive the provisions of the Contract, to issue instructions contrary to the Contract requirements or to act as foreman for the Contractor.

Delete Subsection 105.11 beginning on page 38 and substitute the following:

907-105.11--Inspection of Work. All materials and each part or detail of the Work are subject to inspection by the Engineer. The Engineer shall be allowed access to all of the Work and shall be furnished with such information and assistance by the Contractor as necessary to make a complete and detailed inspection.

Prior to acceptance of the work, the Contractor shall remove and/or uncover such portions of the work as directed by the Engineer. After examination, the Contractor shall restore said portions of the work. If the work exposed or examined was acceptable, the uncovering and/or removing and the restoring of the work will be paid as Extra Work. If the work so exposed or examined was unacceptable, the cost of uncovering and/or removing and the restoring of the work will be the Contractor's responsibility. Additional time will not be allowed for any uncovering and/or removing and restoring of the work.

When any unit of government, political subdivision, Railroad Corporation or other public service is to pay a portion of the cost of the Work, its respective representative shall have the right to inspect the work. Such inspection shall in no way make said agency or corporation a party to this Contract and shall in no way interfere with the rights of either party of the Contract. Further, no inspection of the work by the Engineer or any other MDOT representative shall relieve Contractor of its responsibilities under this Contract.

Delete Subsection 105.12 on page 39 and substitute the following.

907-105.12--Removal of Unacceptable and Unauthorized Work. Unless otherwise determined acceptable under the provisions of Subsection 105.03, all work which does not conform to the requirements of the contract will be considered as nonconforming work.

Nonconforming Work, whether the result of poor workmanship, defective materials, damage through carelessness or any other cause, found prior to final acceptance of the Work shall be removed and replaced in an acceptable manner, without any additional cost to the Commission.

Delete Subsection 105.14 beginning on page 39 and substitute the following:

907-105.14--Maintenance during Construction. The Contractor shall maintain the Work until released from maintenance. This maintenance shall constitute continuous and effective work prosecuted day by day with adequate equipment, forces and material to the end that the roadway, structures and all other features of the Work are kept in satisfactory condition at all times. Traffic shall be continuously, safely and conveniently maintained as required under the Technical Requirements.

In the case of a contract for the placing of a course upon a course or subgrade previously constructed, the Contractor shall maintain the previous course or subgrade during all construction operations.

All cost for maintenance of the Work shall be the responsibility of the Contractor.

Delete Subsections 105.16, 105.16.1 and 105.16.2 beginning on page 40 and substitute the following.

907-105.16--Acceptance.

907-105.16.1--Partial Acceptance. When the Contractor has completed a unit of the Work such as an interchange, a structure, a portion of the road or pavement or one Project of a multi-project contract, the Contractor may request the Engineer to make a final inspection of that unit; or the Executive Director may order a final inspection of the unit if it is in the public's interest. If the Engineer finds upon inspection that the unit has been completed in compliance with the Contract and it is a complete facility which can be made available to the public or made available for the prosecution of work under another contract, the Executive Director may conditionally accept the unit.

In the event items of Work covered by such release are found to be defective or deficient as evidenced by unsatisfactory test reports of materials incorporated in the Work or other engineering determination, the release shall terminate upon written notification to the Contractor. The Contractor shall make all corrections, restorations, constructions or re-constructions deemed necessary and shall resume all contractual responsibilities until all corrective measures have been made in accordance with the terms of the Contract.

Partial acceptance does not constitute final acceptance of the Work, or any part thereof, nor in any way void or alter any of the terms of the Contract.

Relief from "certain contractual responsibilities" as indicated herein may, or may not, include:

(a) Further maintenance of the defined limits of the partially accepted Work.

(b) Further public liability for the defined limits of the partially accepted Work.

MISSISSIPPI DEPARTMENT OF TRANSPORTATION

SPECIAL PROVISION NO. 907-106 DB **CODE: (SP)**

DATE: 03/10/2009

SUBJECT: Control of Materials

Section 106, Control of Materials, of the 2004 Edition of the Mississippi Standard Specifications for Road and Bridge Construction is hereby amended as follows:

907-106.01—Source of Supply and Quality Requirements.

907-106.01.1—General. At the end of the first paragraph of Subsection106.01.1 on page 44, add the following:

The Contractor is responsible for the quality control of all phases of the Work entailed by the Contract requirements including design, construction and materials incorporated. The Contractor shall provide and maintain quality control procedures and processes to continually assess the quality of all work and to verify that the quality of work performed meets the criteria and levels of performance stipulated by the Contract.

The Engineer is responsible for determining the acceptability of all phases of Work entailed by the Contract requirements utilizing MDOT's acceptance procedures.

907-106.02--Local Material Sources

Delete Subsections 106.02.1 on page 45 and substitute the following.

907-106.02.1-- Blank.

Delete Subsections 106.02.2 and 106.02.3 on page 45 and substitute the following:

907-106.02.2--Contractor Furnished Sources. The Contractor shall provide sources of materials meeting the requirements of the Contract and shall bear all costs involved in the inspection, sampling and testing for quality of all materials.

MDOT will assume the cost of acceptance sampling and testing during production and use of the materials.

907-106.02.3--All Sources. All pits and quarry sites are subject to approval from the Mississippi Department of Environmental Quality, Office of Geology, as set forth in Subsection 107.23. All pit operations including hauling shall comply with the applicable provisions of Subsection 107.22. Unless otherwise permitted, all pits shall be drained upon completion.

Delete Subsection 106.03 beginning on page 45 and substitute the following:

907-106.03--Samples, Tests, and Cited Specifications. All materials used in the Work shall conform to the general requirements of Section 700 and the specific requirements for each item of work described therein. Cited specifications of AASHTO, ASTM or Federal Specifications for materials or test methods shall be understood to mean approved pre-published or published "Standards" of ASTM, AASHTO, Federal Specifications; Interim Specifications of AASHTO denoted by the suffix "I", Tentative Specifications of ASTM denoted by the suffix "T", or amended Federal Specifications denoted by a numbered amendment, current on the date of advertisement for RFP.

Unless otherwise provided, all inspection, sampling and testing for quality control of materials shall be performed in accordance with Subsection 700.03 by the Contractor. The work shall be considered incomplete until all materials used in the Work have been accepted. Any work performed prior to approval of materials will be the sole responsibility of the Contractor.

MDOT reserves the right to retest all materials even though they have been tested and approved earlier and to reject all retested materials that do not meet the requirements of the Contract.

Prior inspection, test and approval of material used as a component of another item of work shall in no way imply acceptance if the work in which the material is incorporated fails to meet the requirements of the Contract.

Test reports will be furnished by both parties to the Contract upon request.

Delete Subsection 106.04 on page 46 and substitute the following:

907-106.04--Certification of Compliance. Prior to sampling and testing by the Contractor, the Construction Quality Control Manager may permit use of certain materials or assemblies accompanied by acceptable certificates of compliance stating that such materials or assemblies fully comply with the requirements of the Contract. An approved certificate of compliance in which the lot is clearly identified must accompany each lot of such materials or assemblies delivered to the Work. Certificates of Compliance shall be prepared in accordance with Subsection 700.05.

Materials and assemblies used on the basis of Certificates of Compliance and found not to be in conformity with Contract requirements are subject to rejection whether in place or not.

Unless otherwise required, the original and three copies of all Certificates of Compliance shall be furnished to the Construction Quality Control Manager.

Delete Subsection 106.05 on page 46 and substitute the following:

907-106.05--Plant Inspection. The Engineer may make additional quality assurance inspections at the source of material produced by a third party. In the event such plant inspection is undertaken the following conditions shall be met:

(a) The Engineer shall have the cooperation and assistance of the Contractor and the producer.

(b) The Engineer shall have full entry of the plant as may concern the manufacture or production of the materials.

(c) When specified, the Contractor shall provide an approved laboratory unit conforming to the applicable requirements of Section 907-621.

Delete Subsection 106.07 on page 47 and substitute the following:

907-106.07--Foreign Materials.

907-106.07.1--Use of Domestic Steel Products. When steel or iron is used it shall be in compliance with Section 165 of the Surface Transportation Assistance Act of 1982, the applicable provisions of Title 23 CFR, Section 635.410, as amended, entitled "Buy America Requirements."

Pig Iron and processed, pelletized, and reduced iron ore manufactured outside of the United States may be used in the domestic manufacturing process for steel and/or iron materials used in Federal-aid highway construction projects.

Except as specifically prohibited in these specifications or other Contract Documents, consideration may be given by MDOT to the use of certain materials manufactured or produced outside of the United States provided the materials are delivered to approved locations within the State. The Contractor shall perform any required sampling and testing which the State is not equipped to perform.

All testing shall generally be performed within the United States' Mainland and be subject to witnessing by the Engineer. Certain materials or processes may necessitate the testing be performed or witnessed at the foreign source by State personnel. When the Engineer authorizes inspection at a foreign site, the Contractor shall reimburse the State for all expenses incurred outside the United States by the State's representatives.

For materials requiring mill test reports, the State Materials Engineer will determine that in-plant quality controls are adequate to assure delivery of uniform material in accordance with Contract requirements, and the State Materials Engineer’s determination of the adequacy of in-plant quality controls with respect to mill test reports and certificates of compliance shall be final.

No structural materials will be accepted which cannot be properly identified with mill test reports and certificates of compliance even though in-plant quality control procedures have been established to the satisfaction of the State Materials Engineer.

Delete Subsection 106.10 on page 47 and substitute the following:

907-106.10--Unacceptable Materials. All materials not conforming to the requirements of the specifications at the time they are incorporated in the Work shall be rejected and removed immediately unless otherwise instructed by the Engineer.

907-106.10.1--Acceptance or Rejection of Materials. Following the application of the appropriate MDOT acceptance criteria, the decision of the Engineer will be final as to the acceptance or rejection of the materials.

907-106.10.2--Disposition of Materials. All material evaluated by MDOT as unsatisfactory for the use intended shall be reworked or removed and replaced and resubmitted for acceptance. Rejected materials that have been resubmitted for acceptance shall not be used until the Engineer has given written approval.

When the MDOT evaluation indicates the material may satisfactorily remain in place, acceptance will be at an adjusted price as stated in the Specifications or as directed by the Engineer.

Delete Subsection 106.11 on page 48 and substitute the following.

907-106.11—Blank.

Delete Subsection 106.12 on page 48 and substitute the following:

907-106.12--Substitute Materials. The Contractor may request MDOT to approve the use of substitute materials for specific uses provided the requested material is on MDOT's "List of Approved Sources of Materials" or the “List of Approved Substitute Materials”. Contractors proposing to use substitute materials will be responsible for determining if the material has gained MDOT approval. When an approved substitute material is to be used, the Contractor will furnish a certification from the manufacturer that the product is the same material as approved by MDOT and that no alterations have been made. Material will be sampled and tested by MDOT as necessary for acceptance. Approved lists may be obtained from the State Materials Engineer.

MISSISSIPPI DEPARTMENT OF TRANSPORTATION

SPECIAL PROVISION NO. 907-107 DB **CODE: (SP)**

DATE: 03/10/2009

SUBJECT: Legal Relations and Responsibility to Public

Section 107, Legal Relations and Responsibility to Public, of the 2004 Edition of the Mississippi Standard Specifications for Road and Bridge Construction is hereby amended as follows:

Delete in toto Subsection 107.02 on page 49 and substitute the following:

907-107.02--Permits, Licenses and Taxes. The Contractor or any Subcontractor shall have the duty to determine any and all permits and licenses required and to procure all permits and licenses, pay all charges, fees and taxes and issue all notices necessary and incidental to the due and lawful prosecution of the work. At any time during the life of this contract, the Department may audit the Contractor's or Subcontractor's compliance with the requirements of this section.

The Contractor or any Subcontractor is advised that the "Mississippi Special Fuel Tax Law", Section 27-55-501, et seq. and the Mississippi Use Tax Law, Section 27-67-1, et seq., and their requirements and penalties, apply to any contract or subcontract for construction, reconstruction, maintenance or repairs, for contracts or subcontracts entered into with the State of Mississippi, any political subdivision of the State of Mississippi, or any Department, Agency, Institute of the State of Mississippi or any political subdivision thereof.

The Contractor or any Subcontractor will be subject to one or more audits by the Department during the life of this contract to make certain that all applicable fuel taxes, as outlined in Section 27-55-501, et seq., and any sales and/or use taxes, as outlined in Section 27-67-1, et seq. are being paid in compliance with the law. The Department will notify the Mississippi State Tax Commission of the names and addresses of any Contractors or Subcontractors.

Delete Subsection 107.09 on page 56 and substitute the following:

907-107.09--Construction Over or Adjacent to Navigable Waters and Wetlands. All work on, over or adjacent to navigable waters or wetlands shall be conducted in accordance with permits issued by the appropriate Governmental Approvals.

The Contractor will obtain permits for work over navigable waters and wetlands, and closely examine the provisions of such permits relative to spoil disposal and water quality considerations and the necessary construction of retention basins, settling ponds, temporary navigation lights, etc.

The Contractor shall conform with all provisions and conditions of the permits. Should temporary construction be proposed for the Contractor's convenience in the areas set out in the permits, the Contractor shall apply for and furnish a copy of the required permits to the Engineer before proceeding with the temporary construction. The coordination of obtaining or modifying any permits shall be the Contractor's responsibility.

Delete Subsection 107.10 beginning on page 56 and substitute the following:

907-107.10--Barricades, Warning Signs and Flaggers. The Contractor shall provide, erect and maintain all necessary barricades, lights, danger signals, signs and other traffic control devices; shall provide qualified flaggers where necessary to direct the traffic; and shall take all necessary precautions for the protection of the Work and the safety of the public. Highways or parts of the Work closed to through traffic shall be protected by effective barricades. Suitable warning signs shall be provided to properly control and direct traffic.

The Contractor shall erect warning signs in advance of all places on the Project where operations may interfere with traffic and at all intermediate points where the Work crosses or coincides with the existing roadway. Such warning signs shall be constructed and erected in accordance with the provisions of the Contract.

All barricades, warning signs, lights, temporary signals, other protective devices, flaggers and signaling devices shall meet or exceed the minimum requirements contained in the MUTCD which is current at the time Proposals are received.

All traffic control devices on an existing highway, road or street are understood to be public property under the provisions of Subsection 907-107.12.

On all sections of the Project which are coincident with an existing highway, road, or street and open to traffic, the Contractor shall be fully responsible for the protection, maintenance, and replacement of all existing signs, route markers, traffic control signals, and other traffic service features from the beginning of work, whichever occurs earlier, until Final Acceptance of the Work.

The Contractor shall restore or replace in kind, under the provisions of Subsection 907-107.12, all devices damaged, destroyed or lost by the Contractor.

On or about the effective date of the Notice of Award, the Contractor will make an inventory of all traffic control devices. The inventory shall provide an adequate description of each sign, post, message, signal and other devices as a basis for replacement in kind. A copy of the inventory, dated, identified, and signed will be forwarded to the Engineer.

Near completion of the Work, the Contractor will make another inventory of the traffic control devices and distribute as indicated for the earlier inventory. A list and detail description of the traffic control devices which have been damaged, destroyed or lost and must be replaced in kind by the Contractor will be attached to the inventory. The Engineer will confirm in writing the completion of sign replacement by the Contractor.

Prior to performing work on the Project, the Contractor shall make the necessary arrangements to prevent damage or loss of signs and other traffic control devices. Those that cannot be left in their existing positions shall be removed, stored, or reinstalled at locations approved by the Engineer. As soon as work that conflicted with the original position of each device has been performed, the device shall be reinstalled or replaced with new devices if needed at the original position or modified position as approved by the Engineer.

The Contractor shall maintain in position only those signs that are appropriate for existing conditions and those that are not or have served their purpose shall be removed or covered as approved by the Construction Quality Control Manager. Sign coverings shall be of such material and so placed such that the information contained thereon will not be legible during day or night. The Contractor shall not allow vegetation, construction materials, equipment, etc. to obscure an applicable traffic control device(s).

No change in posted regulatory speed signs may be made without the written authority of MDOT. However, advisory speed plates conforming to the current MUTCD may be used in conjunction with the other standard warning signs provided each posted advisory speed is appropriate for the individual hazard created by construction. All proposed changes in regulatory speeds shall be submitted through the Engineer.

907-107.14.2--Liability Insurance. Delete in toto Subsection 107.14.2 beginning on page 60 and substitute:

907-107.14.2.1--General. The Contractor shall carry Contractor's liability, including subcontractors and contractual, with limits not less than: $500,000 each occurrence; $1,000,000 aggregate; automobile liability - $500,000 combined single limit - each accident; Workers' Compensation and Employers' Liability - Statutory & $100,000 each accident; $100,000 each employee; $500,000 policy limit. Each policy shall be signed or countersigned by a Mississippi Resident Agent or qualified nonresident agent of the insurance company.

The Contractor shall have certificates furnished to the Department from the insurance companies providing the required coverage. The certificates shall be on the form furnished by the Department and will show the types and limits of coverage.

907-107.14.2.2--Railroad Protective. The following provisions are applicable to all work performed under a contract on, over or under the rights-of-way of each railroad shown on the plans.

The Contractor shall assume all liability for any and all damages to work, employees, servants, equipment and materials caused by railroad traffic.

Prior to starting any work on railroad property, the Contractor shall furnish satisfactory evidence to the Department that insurance of the forms and amounts set out herein in paragraphs (a) and (b) has been obtained. Also, the Contractor shall furnish similar evidence to the Railroad Company that insurance has been obtained in accordance with the Standard Provisions for General Liability Policies and the Railroad Protective Liability Form as published in the Code of Federal Regulations, 23 CFR 646, Subpart A. Evidence to the Railroad Company shall be in the form of a Certificate of Insurance for coverages required in paragraph (b), and the original policy of the Railroad Protective Liability Insurance for coverage required in paragraph (a).

All insurance herein specified shall be carried until the contract is satisfactorily complete as evidenced by a release of maintenance from the Department.

The Railroad Company shall be given at least 30 days notice prior to cancellation of the Railroad Protective Liability Insurance policy.

For work within the limits set out in Subsection 107.18 and this subsection, the Contractor shall provide insurance for bodily injury liability, property damage liability and physical damage to property with coverages and limits no less than shown in paragraphs (a) and (b). Bodily injury shall mean bodily

injury, sickness, or disease, including death at anytime resulting therefrom. Property damage shall mean damages because of physical injury to or destruction of property, including loss of use of any property due to such injury or destruction. Physical damage shall mean direct and accidental loss of or damage to rolling stock and their contents, mechanical construction equipment or motive power equipment.

(a) **Railroad Protective Liability Insurance** shall be purchased on behalf of the Railroad Company with limits of $2,000,000 each occurrence; $6,000,000 aggregate applying separately to each annual period for lines without passenger trains. If the line carries passenger train(s), railroad protective liability insurance shall be purchased on behalf of the Railroad Company with limits of $5,000,000 each occurrence; $10,000,000 aggregate applying separately to each annual period.

Coverage shall be limited to damage suffered by the railroad on account of occurrences arising out of the work of the Contractor on or about the railroad right-of-way, independent of the railroad's general supervision or control, except as noted in paragraph 4 below.

Coverage shall include:

(1) death of or bodily injury to passengers of the railroad and employees of the railroad not covered by State workmen's compensation laws,

(2) personal property owned by or in the care, custody or control of the railroads,

(3) the Contractor, or any of the Contractor's agents or employees who suffer bodily injury or death as a result of acts of the railroad or its agents, regardless of the negligence of the railroads, and

(4) negligence of only the following classes of railroad employees:

(i) any supervisory employee of the railroad at the job site

(ii) any employee of the railroad while operating, attached to, or engaged on, work trains or other railroad equipment at the job site which are assigned exclusively to the Contractor, or

(iii) any employee of the railroad not within (i) or (ii) above who is specifically loaned or assigned to the work of the Contractor for prevention of accidents or protection or property, the cost of whose services is borne specifically by the Contractor or Governmental authority.

(b) **Regular Contractor's Liability**, including subcontractors, XCU and railroad contractual with limits of $1,000,000 each occurrence; $2,000,000 aggregate. **Automobile** with limits of $1,000,000 combined single limit any one accident; **Workers' Compensation and Employer's Liability** - statutory and $100,000 each accident; $100,000 each employee; $500,000 policy limit. **Excess/Umbrella Liability** $5,000,000 each occurrence; $5,000,000 aggregate. All coverage to be issued in the name of the Contractor shall be so written as to furnish protection to the Contractor respecting the Contractor's operations in performing work covered by the contract. Coverage shall include protection from damages arising out of bodily injury or death and damage or destruction of property which may be suffered by persons other than the Contractor's own employees.

In addition, the Contractor shall provide for and on behalf of each subcontractor by means of a separate

and individual liability and property damage policy to cover like liability imposed upon the subcontractor as a result of the subcontractor's operations in the same amounts as contained above; or, in the alternative each subcontractor shall provide same.

907-107.15--Third Party Beneficiary Clause. In the first sentence of the first paragraph of Subsection 107.15 on page 61, change “create the public” to “create in the public”.

Delete Subsection 107.17 beginning on page 62 and substitute the following:

907-107.17--Contractor's Responsibility for Work. Until release of maintenance in accordance with Subsection 907-105.16, the Contractor shall have the charge and care thereof and shall take every precaution against injury or damage by action of the elements or from any other cause, whether arising from the execution or the non-execution of the Work. The Contractor shall rebuild, repair, restore and make good, in accordance with the requirements of the Contract, all injuries or damages to the Work occasioned by any of the above causes before release of maintenance and shall bear the expense thereof.

All repairs of damage to items of construction, caused by the traveling public on a Project or section(s) of a Project open to traffic, shall be the responsibility of the Contractor.

In case of suspension of work from any cause whatsoever, the Contractor shall be responsible for the Work and shall take the precautions necessary to prevent damage to the Work, provide for normal drainage, erect necessary temporary structures, signs or other facilities; shall maintain the Work in such a manner as to fully carry out the responsibility for maintaining traffic as required under the Contract; shall properly and continuously maintain in an acceptable growing condition all living material in newly established plantings, seedings, and soddings furnished under the Contract, and shall take adequate precautions to protect new tree growth and other vegetative growth against injury. All such protection and maintenance shall be performed by the Contractor without additional cost to the Engineer.

Delete in toto Subsection 107.22.1 on pages 65 and 66, and substitute the following:

907-107.22.1--Contractor's Erosion Control Plan. At the preconstruction conference or prior to starting any work on the project, the Contractor shall submit to the Project Engineer for concurrence a comprehensive erosion and siltation control plan utilizing temporary measures and permanent erosion control features to provide acceptable controls during all stages of construction.

The contract time for this project has allowed 60 calendar days for the submittal and concurrence of the Contractor’s erosion control plan, MDOT’s review of the plan, and any revisions that may be necessary. The original contract time shall not be adjusted unless delays are caused solely by the Department for the submission, review, and concurrence of the Contractor’s erosion control plan.

As a minimum, the plan shall include the following:

1. Erosion Control Plan (ECP) sheets or the plan profile sheets, 11” x 17” or larger, of all areas within the rights-of-way from the Beginning of the Project (BOP) to the End of the Project (EOP) showing the location of all temporary erosion control devices. Erosion control devices should be identified by exact type, temporary or permanent, configuration, and placement of each item to prevent erosion and siltation.
   - A detailed description, including locations (station numbers) of the Contractor’s proposed sequence of operations including, but not limited to, clearing and grubbing, excavation, drainage, and structures.

- A detailed description, including locations, and best management practices (BMP) that will be used to prevent siltation and erosion from occurring during the Contractor's proposed sequence of operations.

2. A copy of the certification for the Contractor's Certified Erosion Control Person whose primary duty shall be monitoring and maintaining the effectiveness of the erosion control plan, BMPs, and compliance with the NPDES permit requirements.
3. A plan for the disposal of waste materials on the project right-of-way which shall include but not be limited to the following:
   - containment and disposal of materials resulting from the cleaning (washing out) of concrete trucks that are delivering concrete to the project site.
   - containment and disposal of fuel / petroleum materials at staging areas on the project.

The erosion and siltation control plan shall be maintained on the project site at all times, updated as work progresses to show changes due to revisions in the sequences of construction operations, replacement of inadequate BMPs, and the maintenance of BMPs. Work shall not be started until an erosion control plan has been concurred with by the MDOT. The Engineer will have the authority to suspend all work and/or withhold payments for failure of the Contractor to carry out provisions of MDEQ's Storm Water Construction General Permit, the erosion control plan, updates to the erosion control plan, and /or proper maintenance of the BMPs.

Delete Subsection 107.22.4 beginning on page 67 and substitute the following:

907-107.22.4--Structures, Grading, and Other Construction. The Contractor shall perform all Work required under the Contract in such manner and with such protective features to control and contain siltation within the limits of the Work.

Performance in the designated or directed sequence and the providing of all erosion protection shall be considered the Contractor's responsibility.

The Contractor shall prevent or minimize undesirable siltation in connection with excavation, construction and backfill of structures. Such temporary measures as are indicated herein for clearing and grubbing or other measures such as covering of excavated materials, lining channels, constructing bulkheads or other effective measures shall be employed.

The Construction Quality Control Manager will limit the areas of excavation, borrow, and embankment operations commensurate with the Contractor's capability and progress in keeping the finish grading, seeding, mulching, and other such permanent erosion control measures current. Should seasonal limitations make such coordination unrealistic, temporary erosion control measures shall be used to the extent feasible and justified. The exposed surface area of erodible material at any one time for each grading operation shall not exceed 750,000 square feet without prior approval by the Construction Quality Control Manger.

The Construction Quality Control Manager may increase or decrease the areas of erodible material to be exposed at any one time by clearing and grubbing, excavation, borrow and fill operations as determined by analysis of the conditions of the Project.

It is the intent of these specifications that the Work shall proceed in a manner and sequence to ensure the earliest possible establishment of permanent erosion control items.

Delete Subsection 107.22.5 on page 68 and substitute the following:

907-107.22.5--Special Temporary Erosion Control. The Contractor shall perform all designated temporary and all emergency erosion control work such as fast growing grasses or other designated temporary features for problem areas during grading, paving or other construction work as directed by the Construction Quality Control Manager. The Work shall be performed at the time and in the manner deemed to provide the most effective deterrent to siltation.

MISSISSIPPI DEPARTMENT OF TRANSPORTATION

SPECIAL PROVISION NO. 907-108 DB **CODE: (SP)**

DATE: 03/10/2009

SUBJECT: Prosecution and Progress

Section 108, Prosecution and Progress, of the 2004 Edition of the Mississippi Standard Specifications for Road and Bridge Construction is hereby amended as follows:

907-108.01--Subletting of Contract. Delete Subsection 108.01.1 beginning on page 72 and substitute the following:

907-108.01--General. The total value of all work performed by the Contractor's own organization shall be no less than 40 percent of the Contract Price. The Contractor shall not assign, subcontract, sublet or transfer any or all of its interest in this Contract, except the furnishing of necessary materials, without prior written approval of the Executive Director. Consent by the Executive Director to any subcontract shall not relieve Contractor from any of its obligations hereunder, and Contractor is required to maintain final management responsibility with regard to any such subcontract.

The Contractor's "own organization" shall be construed to include workmen employed and paid directly, owned or rented equipment and trucks that are classed as owner-operator.

The simple expediency of carrying the workmen of one Contractor on the prime Contractor's or approved subcontractor's payroll to avoid subcontracting will not be permitted.

If evidence and investigation establish that a violation of the subcontract requirement is being attempted through subterfuge whereby one Contractor's equipment is leased to the prime Contractor or the workmen of one Contractor are placed on the payroll of the prime Contractor, the Executive Director will take such action as deemed appropriate under the provisions of the Contract. This provision does not include the lease or use of equipment from a corporation or company wholly owned by the prime Contractor.

Subcontracting does not release the Contractor of bond and Contract liability and shall not be construed to imply that a contract exists between the Department and a third party.

The Contractor must pay subcontractor(s) for satisfactory performance of their contracts no later than 15 calendar days from receipt of payment from the Department. Within 15 calendar days after receiving payment from the Department for work satisfactorily performed, the Contractor shall make prompt payment to all subcontractors or material suppliers for all monies due.

Delete Subsection 108.02 beginning on page 74 and substitute the following:

907-108.02--Notice to Proceed. The Contractor shall not begin construction on any feature of the Work before a Notice to Proceed is issued.

If the Department delays the issuance of the Notice to Proceed for reasons beyond the Contractor's control, the beginning of Contract time shall be adjusted equal to the number of calendar days of the delay. Contract time shall **NOT** be adjusted for delays caused by the Contractor. The Notice to Proceed and the beginning of Contract time shall be the same date.

Delete Subsection 108.03.1 in toto beginning on page 75 and substitute the following:

907-108.03.1—Prosecution and Progress. Delete Subsection 108.03.1 beginning on page 75 and substitute the following:

907-108.03.1--Critical Path Method (CPM) Progress Schedules.

907-108.03.1.1--Definitions. The following definitions pertaining to construction schedules shall apply with respect to all scheduling provisions set forth in the Contract:

1. **Activity:** Any task, or portion of a project, that takes time to complete.

2. **Baseline Schedule:** The initial CPM schedule representing the Contractor's original work plan, as accepted by the Engineer.

3. **Controlling Operation:** The activity within that series of activities defined as the Critical Path, which, if delayed or prolonged, will delay the time of completion of the Contract.

4. **Critical Path:** The series of activities that determines the earliest completion of the Project (i.e., the Forecast Completion Date) in accordance with the terms and conditions of the Contract.

5. **Critical Path Method:** A mathematical calculation that determines the earliest completion of the Project in accordance with the terms and conditions of the Contract and that includes a graphic representation of the sequence of activities showing the interrelationships and interdependencies of the elements composing a project.

6. **Current Contract Completion Date:** The date for completion of the Contract based on the fixed completion date as specified for full and final completion of the Work in the Contract documents.

7. **Differential Completion Time:** The difference in time between the Current Contract Completion Date and the Contractor's scheduled early Forecast Completion Date as shown on the Baseline Schedule, or schedule updates and revisions thereto.

8. **Final Completion:** Completion of all Contract Work to the extent that the Project is open to the safe, convenient, and unimpeded use of the traveling public as determined solely by the Engineer.

9. **Float:** The amount of time between the early start date and the late start date, or the early finish date and the late finish date, of any activity or group of activities in the network. See Free Float and Total Float.

10. **Fragnet:** A section or fragment of the network diagram comprised of a group of activities.

11. **Free Float:** The amount of time an activity can be delayed without delaying the Early Start of a successor activity.

12. **Hammock Activity:** A non-critical activity added to the network to span an existing group of activities for summarizing purposes.

13. **Milestone:** An activity that represents a significant point in time, and may be used to indicate the start or end of a series of related activities and/or Contract accomplishment. A milestone has zero original and remaining duration, and does not increase the Contract time.

14. **Revision:** A change in the schedule that modifies logic, revises the current Contract completion date, adds or deletes activities, or alters activities, sequences, descriptions, calendars, actual dates, or durations.

15. **Tabular Listing:** A report showing schedule activities, their relationships, durations, scheduled and actual dates, float, budgeted cost, and all log notes where comments are inserted for an activity.

16. **Total Float:** The amount of time that an activity may be delayed without affecting the total duration of the Project.

17. **Update:** The modification of the most current Contractor's CPM progress schedule through a regular and periodic (at least monthly) review to incorporate actual progress to date by activity. Update shall indicate changes to the activity's percent complete, actual start and actual finish dates.

18. **Recovery Schedule:** A revised Baseline Schedule requested by the Engineer demonstrating how the Contractor will expedite progress to recover delays that are the responsibility of the Contractor.

907-108.03.1.2--Scheduling Conference. The Contractor shall schedule and conduct a Scheduling Conference. Mandatory attendees shall include the Contractor's Project Director, Construction Scheduler, Quality Assurance Scheduler and the Engineer. This conference shall be scheduled within 15 calendar days after award of the Contract. At this meeting, the requirements of the Special Provisions regarding scheduling will be reviewed with the Contractor.

At the Scheduling Conference, the Contractor shall furnish an Interim Baseline Schedule as discussed in Subsection 108.03.1.4 and be prepared to discuss both its proposed methodologies for fulfilling the scheduling requirements and its sequence of operations. In this meeting, the Contractor shall also supply to the Engineer a copy of the Contractor's proposed activity code dictionary that will be utilized in the sorting of the activities into phases of work, areas of work, types of work, etc. The Contractor shall be prepared to discuss requirements for all off-site material testing and submittals applicable to the Contract, discuss their respective preparation, and review durations.

907-108.03.1.3--Blank

907-108.03.1.4--Interim Baseline Schedule. This interim schedule shall provide a detailed breakdown of the activities to be performed in the initial 90 calendar days of work plus a generalized breakdown of activities for the balance of the Work that includes meeting the Contract completion dates. The Contractor shall maintain and submit monthly an updated 90 calendar day Interim Baseline Schedule until submission and Engineer's acceptance of the Baseline Schedule.

The Engineer will be allowed 10 calendar days to review the Interim Baseline Schedule and to provide comments. The Interim Baseline Schedule does not require the Engineer's acceptance, but all comments from the Engineer with respect to the Interim Baseline Schedule are to be incorporated within the Baseline Schedule. Re-submittal of the Interim Baseline Schedule is not required. Late review of the Interim Baseline Schedule by the Engineer shall not restrain the Contractor's submittal of the Baseline Schedule.

907-108.03.1.4.1 Project Payment Schedule (PPS). The PPS is a variation of the schedules set forth in 108.03.1.4 and 108.03.1.5 that outlines the estimated payment amounts per pay period over the life of the

Project. The PPS sets forth the budgeted cost, beginning date, ending date, and percent complete for each Schedule activity. Estimated pay amounts for each activity can then be developed by multiplying the percent complete for the particular activity at the end of each pay period times the budgeted cost for that same activity. The schedules shall include consideration for payments in connection with the procurement, fabrication and delivery of needed materials.

The PPS schedule shall meet all schedule requirements set forth in Subsection 108.03.1.6.

907-108.03.1.5--Baseline Schedule. Within 60 calendar days of the Contract award date, the Contractor shall submit to the Engineer a Baseline Schedule, which shall incorporate any and all comments provided by the Engineer regarding the Interim Baseline Schedule. The Baseline Schedule shall have a data date of the effective date of the Notice to Proceed and shall not include any work prior to that date. A Baseline Schedule Narrative as described in Subsection 108.03.1.9.1 and a revised PPS to reflect all changes shall accompany the Baseline Schedule.

The Baseline Schedule shall depict how the Contractor plans to complete the Work of the Contract and shall show all those activities that define the Critical Path. The Baseline Schedule shall provide for the adequate planning of the Project, as well as the Engineer's monitoring and evaluation of progress and analysis of time impacts. The Contractor shall not attribute any negative float to any activity depicted on the Baseline Schedule. The Engineer will be allowed 10 calendar days to review and accept the Contractor's submittal of the Baseline Schedule. Should the Engineer reject the Contractor's submittal of the Baseline Schedule, the Contractor shall resubmit a revised schedule within 15 calendar days of receipt of the Engineer's review comments, at which time a new 15 calendar day review period by the Engineer will begin.

907-108.03.1.6--General Requirements Regarding Schedules. All schedules submitted by the Contractor shall comply with the following requirements.

All schedules shall be created, updated and provided in the most current version of Primavera Project Planner (P3) and shall comply with (1) any and all interim target dates and/or milestones specified by the Contract; (2) all constraints, restraints or sequences specified by the Contract; and (3) the number of days set forth in the Contract for completion of the Work

All schedules shall follow these scheduling requirements: 1) No constraints shall be included except on milestone, finish and start activities, 2) Negative lags shall not be used at any time, 3) Each activity shall have at least one predecessor and one successor, 4) All submittal, procurement and fabrication activities shall be included, 5) Highlight the critical path (<10 days float) on all applicable reports, and 6) Include milestone activities for completion of all applicable investigations, foundation design, bridge superstructure design, demolition/removal of portions of existing bridge(s), roadway, lane shifts, and full use of the bridge by the traveling public.

All schedules shall indicate the interdependence of activities (how the start of a given activity depends on the completion of preceding activities) and the sequence of work (how failure to complete a given activity may restrain the start of following activities).

Activities with duration times in excess of 15 calendar days, except for non-construction activities, shall be kept to a minimum and be subject to review by the Engineer.

All schedules shall include any coordination and cooperation requirements, construction restrictions or other requirements of the Contract. All schedules shall include sufficient work calendars to identify

specific activities requiring multiple shifts/day, multiple crews/shift, extended workweeks, or work at times other than what may be considered regular days or hours.

All schedules shall include activities for all work required by the Contract, including detailed activities for preliminary and final design work plus associated review requirements, permit processes, utilities coordination, demolition, construction, quality control, subcontractors, vendors, and suppliers. In addition, all schedules shall include, as a minimum, activities for the procurement, fabrication, required testing time frames, delivery of critical or special materials and equipment, as well as all submittal activities required by the Contract.

The activities are to be described by location, phase, and sequence so that the work is readily identifiable and the progress of each activity can be measured. Activity duration shall be logical and consistent with the Contract documents and shall be based on realistic and available resources of the Contractor.

All schedules submitted to the Engineer shall be depicted graphically by network diagrams. The Contractor's network diagrams shall be time-scaled to show a continuous flow of information from left to right. The critical path shall be clearly and graphically identified on the network diagrams. All network diagrams prepared by the Contractor shall be organized in a logical fashion. The activities shown on the diagrams shall be sorted and grouped per work structure, with the Work covered by each Project Payment Schedule Item separately designated by distinct schedule activities.

The Contractor's coding for each activity shall be in accordance with the activity code dictionary supplied to the Engineer at the Scheduling Conference. The Engineer has the authority to require the Contractor to utilize additional filters, layouts or activity codes to be able to further categorize, group or summarize the activities. Furthermore, the network diagrams shall indicate all submittals and off-site material testing required by the Contract, and the submittals shall be sub-grouped by category.

All schedules shall also identify, at a minimum, the following activities:

- Identification of all subcontractor work and interfaces as separate activities, including activity description and responsibility coding that identifies the type of utility and the name of the subcontractor involved.

- Identification of Punchlist and final clean up activities (not to exceed 30 calendar days total) required by the Contractor to complete the Work

For each activity in the network, the Contractor shall determine the Contract value of the work activity. Administrative activities, MDOT activities and milestones shall have an assigned cost of zero. The summation of the costs of all activities shall be equal to the Contract price for the Project. These costs are to be incorporated into the Primavera schedule and the anticipated daily earnings computed for both early and late starts. These earnings are to be graphically displayed in a time-cost chart ("S" curve).

Float shall not be considered as time for the exclusive use of or benefit of either MDOT or the Contractor but shall be considered as a jointly owned, expiring resource available to the Project and shall not be used to the financial detriment of either party.

In connection with the submittal of the Baseline Schedule and all updates thereto, the Contractor is required and shall require all of its subcontractors to submit in writing a statement certifying that the subcontractor has concurred with the schedule and that the subcontractor's related schedule has been incorporated accurately, including the duration of activities.

The Engineer's acceptance of a Contractor schedule shall not constitute a change of any portion of the Contract. Failure of the Contractor to include any element of Work required by the Contract in its schedules shall not relieve the Contractor from completing the Work within the time limit specified for completion of the Contract. If the Contractor fails to define any element of Work, activity or logic, and the omission or error is discovered by either the Contractor or the Engineer, it shall be corrected by the Contractor in regard to the next monthly update or revision of the schedule. No additional time or cost to the Contract will be allowed for this correction.

Should the Baseline Schedule or any update thereto show variances from the scheduling requirements of the Contract, the Contractor shall make specific mention of the variations in the letter of transmittal, in order that, if accepted, proper adjustments to the Project schedule can be made. Notwithstanding the foregoing, the Contractor will not be relieved of the responsibility for completing all Work required by the Contract.

In the event that the Baseline Schedule, or any updates or revisions, show completion occurring prior to the Completion Date and/or interim milestones, the Contractor must demonstrate to the Engineer that the schedule is reasonable, practical and achievable. Moreover, it is expressly understood and agreed that (1) the Contractor shall have no claim for delay, disruption, hindrance, or other impact based on any early completion indicated in the Contractor's schedule(s); (2) a delay is critical if and only if to the extent that the delay extends the completion of the entire Work to a date that is beyond the contractually specified date for full completion of the Work, regardless of the Contractor's planned early completion; and (3) the Contract price includes full compensation for all time-related costs associated with the Contractor working at the Project site for the full duration of the time set forth in the Contract, even if the Contractor represents that the Contractor plans to fully finish the Work in less than the time established by the Contract for full completion of the Work.

The Contractor shall not incorporate any changes or delays to the Work in the Baseline Schedule and in all schedules submitted thereafter without the Engineer's approval.

The submittal of all schedules shall also be accompanied by computer-generated mathematical analysis tabular reports for all activities included in the network diagrams. The tabular reports (8 l/2" x 11" size) shall consist of a report detailing the following or as directed by the Engineer:

1) Activity number and description

2) Activity Codes Line

3) Original, and remaining durations

4) Earliest start date (by calendar date)

5) Earliest finish date (by calendar date)

6) Actual start date (by calendar date)

7) Actual finish date (by calendar date)

8) Latest start date (by calendar date)

9) Latest finish date (by calendar date)

10) Identify activity calendar ID

11) Total Float and Free Float, in calendar days

12) Percentage of activity complete and remaining duration for incomplete activities

13) Detailed Predecessor

14) Detailed Successor

15) Cost associated with each activity

16) Budgeted Cost

Unless otherwise specifically noted elsewhere herein, network diagrams and the tabular reports shall be submitted to the Engineer in the following quantities:

a) 2 sets of the network diagrams on "E" size (36" x 48") sheets

b) 4 sets of the network diagrams on reduced-size (11" x 17") sheets

c) 4 copies of all tabular reports (8 1/2" x 11" size)

d) 4 copies of the "S" curve

e) 2 copies of electronic files of the Primavera data and the schedule narrative report on CD-ROM or other media as directed by the Engineer.

907-108.03.1.7--Quarterly Progress Meetings. The Engineer and the Contractor shall hold quarterly progress meetings. In the event that the Contractor falls behind schedule, the Engineer may request that the meetings are held more frequently. The quarterly meetings will be held to discuss, among other things, (1) the near-term schedule activities; (2) the current status of As-Built documentation, RFI's, Contractor Daily Reports, Quality Control, submittals, correspondence, and Contract Change Orders; and (3) Jobsite safety, cleanup, traffic control, and coordination issues. Furthermore, the meeting shall address any long-term schedule issues and discussion of any relevant technical issues. The Contractor shall develop a look-ahead schedule identifying the previous month; current month and a month look ahead. The Contractor's look-ahead schedules shall provide sufficient detail to address all activities to be performed and to identify issues requiring action or input by MDOT. At least seven (7) calendar days prior to the quarterly progress meetings, the Contractor shall furnish the look-ahead schedule in hard copy and electronic format to the Engineer for review.

No later than seven (7) calendar days prior to the quarterly progress meeting, the Contractor shall furnish a list of critical items relating to the look-ahead schedule. During the meeting the parties will jointly determine whether additional items need to be listed, the priority of items, the parties responsible for resolving the critical item and the scheduled resolution date. Nothing herein shall be construed to excuse the Contractor's obligation to timely provide either a notice of delay or a notice of potential claim.

The Contractor shall keep minutes of the meeting and distribute a draft of the minutes to all participants for review and comments within two (2) working days of the meeting. The final minutes of the previous quarterly meeting must be distributed at least seven (7) calendar days prior to the next meeting. The list of critical items shall be updated and distributed with the quarterly meeting minutes.

907-108.03.1.8--Monthly Update Schedules. The Contractor shall regularly update the accepted Baseline Schedule to reflect the current status of the Project. On the day following the application for payment cut-off date, the Contractor shall submit a Monthly Update Schedule to the Engineer. The update shall include all information available and status of the Project as of the payment application cut-off date, or such other date as established by the Engineer. All Monthly Update Schedules described below shall comply with the requirements indicated above.

All Monthly Update Schedules shall incorporate all changes previously approved by the Engineer.

Each Monthly Update Schedule shall reflect all as-built activities performed as of the data date of the update schedule. The Monthly Update Schedule shall include the period from the last update to the data date and for the remainder of the Project. The current period's activities shall be reported as they actually took place. In the updated schedule, the Contractor shall indicate the actual dates that activities were started and/or completed. Ongoing activities shall have an indication of the percent complete and the remaining duration to complete such activities.

Portions of the schedule on which activities are complete need not be reprinted and submitted in subsequent updates. However, the electronic file of the submitted Monthly Update Schedule and the related reports shall constitute a clear record of the actual progress of the Work from the data date of the Notice to Proceed to the effective date of the update, as well as the projected future Work up to final completion of the Project.

The Monthly Update Schedule, and any other relevant information available, will be used to determine the effect of any contemplated or actual changes or delays to the Work.

907-108.03.1.9--Schedule Narrative Reports. The Contractor shall also prepare Schedule Narrative Reports, which are to be submitted to the Engineer concurrently with each CPM submittal.

907-108.03.1.9.1—Interim Baseline and Baseline Narrative Report. These Narrative Reports shall describe, in a narrative fashion, the logic of the schedule. Each shall identify the critical path and other areas of schedule delay risk. The narratives shall include a listing of all decision/approval points in the schedule.

907-108.03.1.9.2--Progress Narrative Reports. The Progress Narrative Report shall describe the physical progress of work performed by the Contractor during the report period. In addition, the report shall indicate the Contractor's plans for continuing the Work during the forthcoming report period, actions planned to correct any negative float, and any delays or problems and their estimated impact on the Contract completion date for the Project. In addition, the Contractor shall include for consideration by the Engineer alternatives for possible schedule recovery to mitigate any potential delay. The report shall follow the outline set forth below:

1. Contractor's Transmittal Letter

2. Work completed during the report period

3. Description of the current critical path of the schedule

4. List of any and all delayed activities, reasons for delay and steps taken to mitigate the delay

5. Status of the Contract Completion Date

(a.) On schedule

(b.) Ahead of schedule and number of calendar days

(c.) Behind schedule and number of calendar days

6. Listing of any changes to the schedule activities or logic

Narrative reports containing non-factual, subjective statements, judgments or opinions, which appear to assign responsibility or to make conclusions as to excusability, responsibility, or compensability for delays shall be cause for rejection of the narrative report.

On a monthly basis, and on a date to be determined by the Engineer, the Contractor shall meet with the Engineer to review the Monthly Update Schedule and the Schedule Narrative Report. The Engineer will be allowed 7 calendar days after the meeting to review and accept or reject the Monthly Update Schedule and the Schedule Narrative Report. Rejected schedules and/or reports shall be revised and resubmitted to the Engineer within 10 calendar days, at which time a new 7 calendar day review period by the Engineer will begin. All efforts shall be made between the Engineer and the Contractor to complete the review and the approval process prior to the cut-off date for the next update schedule. To expedite the process, a second meeting between the Engineer and the Contractor shall be held, as determined to be necessary by the Engineer.

907-108.03.1.10--Schedule Revisions.

907-108.03.1.10.1—Contractor Proposed Revisions. Once the Baseline Schedule is accepted by the Engineer, the Contractor shall not make any revisions to the schedule except as set forth in 108.03.1.10.2.

The above provision shall not be construed as a limitation on the Contractor's obligation to accurately reflect the as-built progress of the Work with respect to each Monthly Update Schedule. It is expressly understood and agreed that the term "revisions", as used herein shall refer to changes to the schedule with respect to work that will be prospectively performed up to completion of the Project.

907-108.03.1.10.2--Engineer Required Revisions. Within 15 calendar days of the Engineer's request, the Contractor shall submit a revised schedule whenever the Engineer determines that there is a major change in the Project scope that affects the Critical Path

If Contractor falls 15 calendar days behind on any critical path activity shown on the Baseline Schedule or it becomes apparent that the Work may not be completed as scheduled or that milestone dates may not be achieved as scheduled, Contractor shall prepare and submit a proposed revised Recovery Schedule demonstrating Contractor's proposed plan to regain lost schedule progress and to achieve Substantial Completion and all Work related thereto and Final Acceptance. After the Engineer accepts the recovery schedule, it will become a part of the Baseline Schedule. The proposed revised Recovery Schedule shall include a narrative demonstrating the resources to be employed and work activities necessary to meet the proposed revision. All costs (including any additional labor costs) to analyze, revise and to incorporate any schedule modification shall be the responsibility of the Contractor. Contractor will prepare and submit the recovery schedule within 10 calendar days after the submittal of the monthly Baseline Schedule update. The Engineer and its representatives shall review the recovery schedule and submit written comments to Contractor within ten (10) calendar days of receipt of the recovery schedule submittal

907-108.03.1.11--Measurement and Payment. An amount equal to 25 percent of the total estimated

value of the Work performed during each period may be withheld if the Contractor fails to submit any of the acceptable schedules. This includes Monthly Updates and Schedule Narrative Reports, and/or failure of said schedules to conform to the requirements of this section, as determined by the Engineer.

Thereafter, on subsequent successive payment application periods, the percentage withheld may be increased at the rate of 25 percent per payment application period in which the non-conformance with this specification continues. Monies withheld for this non-conformance will be released for payment on the next monthly payment application for partial payment following the date the schedule information is brought back into compliance with this specification.

907-108.03.2—Preconstruction Conference. Prior to commencement of the Work, a preconstruction conference shall be held for the purpose of discussing with the Contractor essential matters pertaining to the prosecution and satisfactory completion of the Project. The Contractor, with the assistance of the Engineer, shall schedule the preconstruction conference.

Delete Subsection 108.03.3 on page 76 and substitute the following:

907-108.03.3—Commencement and Execution of Work. The work shall begin as set out in the Contract Documents or the approved progress schedule and shall be prosecuted at a rate necessary to insure its completion within the contract time specified by the Contractor.

All work covered by supplemental agreement shall not commence until the supplemental agreement has been executed by all parties.

Delete Section 108.04 beginning on page 77 in toto and substitute the following:

907-108.04— Blank.

Delete Section 108.06 beginning on page 79 in toto and substitute the following:

907-108.06.1.3--Extension of Time. The Contract Time may not be extended unless there is a delay to the Project caused by an event listed below.

(a) Force Majeure as that term is defined in Section 902 Subsection VI.

(b) MDOT initiated scope changes, directives or authorized extra work.

(c) Acts or omissions by MDOT or its duly appointed representative that unreasonably interfere with the Contractor's performance and cause delay of Work on the critical path of the Project.

(d) Changes in a legal requirement or regulation that becomes effective subsequent to the date of this Contract.

(e) Discovery of hazardous materials as set forth in Section 902 Subsection V not discoverable from a reasonable investigation and analysis of the site prior to the Proposal Date.

(f) Discovery of archeological or paleontological sites not previously identified as set forth in Subsection 5.5 of the Technical Requirements not discoverable from a reasonable investigation and analysis of the site prior to the Proposal Date.

Other than as noted above, the Contract Time shall not be increased for Contract time adjustments or claimed delay damages. Requests for time extensions shall be made in writing to MDOT within 20 calendar days of the event causing the delay. Requests shall include a schedule analysis fragnet demonstrating the delay is the critical path.

Delete Subsection 108.07 on page 85 in toto and substitute the following:

907-108.07— Failure to Complete the Work on Time. The assessment of liquidated damages shall not be considered a penalty; any damages assessed a reasonable estimate of fair compensation for the damage of delay that may reasonably be anticipated from the Contractor's failure to complete the Project within the Contractor specified time constraints.

If the Contractor fails to complete all items of Work by the Contractor's specified Final Completion Date, the Commission will assess liquidated damages ($3500/day) per calendar day until the date all items of Work are completed.

The assessments of liquidated damages shall be deducted by the Commission from monies due the Contractor, if sufficient monies are available. Otherwise, the Contractor shall pay to the Commission the liquidated damage assessments within fifteen (15) business days of notice that payment is due.

907-108.08-- Default and Termination of Contract. At the end of Subsection 108.08 on page 87, add the following:

Upon termination for default, all Project Documents, as defined in Technical Requirements Section 2.3, shall be surrendered forthwith by Contractor to MDOT. MDOT will be authorized to use the Design documents for the sole purpose of promoting, completing, using, maintaining, upgrading or adding to the Project. This authorization includes allowing design professionals to make changes, corrections, or additions to the Design documents for these purposes.

Delete Subsection 108.09 beginning on page 87 in toto and substitute the following:

907-108.09--Termination of Contract for Reasons Other Than Default. MDOT reserves the right to cancel the Work upon ten (10) calendar days written notice to Contractor. Should the Work be so canceled by MDOT for convenience, Contractor shall be paid for the value of the Work, based upon the Project Payment Schedule, performed to the date of cancellation and demobilization together with any cancellation charges by vendors and subcontractors. The Contractor shall also be entitled to the cost of securing the Work, provided such cost is approved by MDOT. In no event, however, shall the total payment to Contractor pursuant to such a cancellation exceed the Contract Price.

Termination of all or a portion of the Contract shall not relieve Contractor of any responsibility it would otherwise have for the Work completed, or any claims arising from that work.

Upon such termination, all Project Documents, as defined in Technical Requirements Section 2.3, shall be surrendered forthwith by Contractor to MDOT. MDOT will be authorized to use the Design documents for the sole purpose of promoting, completing, using, maintaining, upgrading or adding to the Project. This authorization includes allowing design professionals to make changes, corrections, or additions to the Design documents for these purposes.

Delete Subsection 108.10 on page 88 and substitute the following:

907-108.10--Termination of Contractor's Responsibility. The construction phase of this Contract will

be considered complete when all Work has been satisfactorily completed, the final inspection made, the Work accepted by the Executive Director and the final estimate paid. When the Executive Director writes the formal letter of acceptance, the Contractor will be released from further obligation except as set forth under the warranty provisions of the Contract or as provided by law.

MISSISSIPPI DEPARTMENT OF TRANSPORTATION

SPECIAL PROVISION NO. 907-109 DB **CODE: (SP)**

DATE: 03/10/2009

SUBJECT: Measurement and Payment

Section 109, Measurement and Payment, of the 2004 Edition of the Mississippi Standard Specifications for Road and Bridge Construction is hereby amended as follows:

Delete Subsection 109.01 beginning on page 88 and substitute the following:

907-109.01—Measurement of Quantities. Measurement and calculations of quantities are for testing frequencies only and for this reason the units of measurement and method of measurement shall be consistent with units of measurements and methods of measurements noted in the Standard Specifications.

Delete the second paragraph of Subsection 109.02 on page 91.

Delete Subsection 109.03 on page 91 and substitute the following:

907-109.03--Blank

Delete Subsection 109.04 beginning on page 91 and substitute the following:

907-109.04--Extra and Force Account Work. Allowable Contract adjustments in accordance with the requirements and provisions of Subsection 907-104.03 will be paid for at the unit prices or lump sum price stipulated in the agreement authorizing the Work, or the Executive Director may require the Contractor to do such work on a force account basis to be compensated in the following manner:

(a) **Labor.** The Contractor will receive the rate of wage or scale agreed upon in writing for each hour that the foreman in direct charge of the specific operations and labor are actually engaged in such work. An amount will be added equal to 19 percent of the sum thereof.

(b) **Bond, Insurance and Tax.** For property damage, liability, and workmen's compensation insurance premiums, unemployment insurance contributions and social security taxes on the force account work, the Contractor will be reimbursed actual cost only. The Contractor shall furnish satisfactory evidence of the rate or rates paid for the bond, insurance and tax.

(c) **Materials.** The Contractor will receive the actual cost of the materials, including transportation charges if paid by the Contractor, exclusive of machinery rentals as hereinafter set forth, plus 19 percent.

(d) **Equipment.** For any machinery or special equipment, other than small tools, authorized by the Engineer, the Contractor will receive the rates agreed upon in writing. In the event an agreement cannot be reached for a particular piece of equipment, the book entitled "Rental Rate Blue Book For Construction Equipment" as published by Equipment Watch® and is current at the time the force account work is authorized will be used to determine equipment ownership and operating expense rates. These rates do not include allowances for operating

labor, mobilization or demobilization costs, overhead or profit, and do not represent rental charges for those in the business of renting equipment. Operating labor and overhead cost will be allowed. Subject to advance approval of the Engineer, actual transportation cost for a distance of not more than 200 miles will be reimbursed for equipment not already on the Project. The cost of transportation after completion of the force account work will be reimbursed except it cannot exceed the allowance for moving the equipment to the Work.

The hourly use rates are computed on the basis of a 40-hour workweek. When the Contractor works more than 40 hours per week, the cost for "Cost of Facilities Capital" (CFC) will be excluded from the hourly rate for those hours in excess of 40 hours per week.

No more than eight hours of standby will be paid during a 24-hour day, nor more than 40 hours per week. Standby time will not be allowed unless the equipment has been in idle status in excess of 16 hours during a 24-hour day. Likewise, standby will not be allowed during periods when the equipment would have otherwise been in idle status or when equipment could reasonably have been used on other parts of the Project. Actual operating time during a week will be credited against the 40 hours maximum standby allowance.

All equipment shall be subject to approval from day to day in accordance with the requirements of Subsection 907-108.05.

(e) **Miscellaneous.** No allowance will be made for general superintendence, the use of small tools, or other costs for which no specific allowance is herein provided.

(f) **Compensation.** No extra work on a force account basis will be paid unless unit prices for labor, materials and equipment rentals have been agreed upon in writing, or as otherwise provided for equipment in paragraph (d), before work is started. The unit prices paid shall not exceed the quoted unit price for each item stipulated in the agreement.

The Contractor, or the Contractor’s authorized representative, and the Engineer shall compare records of extra work done on a force account basis at the end of each day. Copies of these records shall be made upon the form provided for this purpose and shall be certified to by the Contractor and the Engineer. The Contractor shall furnish to the Engineer itemized statements of the cost of all force account work. The statements shall include a true copy of the payroll and the original receipt of bills and invoices for the material used and the freight charges paid. Where materials used are not specifically purchased for use on extra work but taken from the Contractor's stock, the Contractor may submit an affidavit of the quantity, price and freight on these materials.

Statements covering force account work for each specific agreement shall be submitted promptly at the end of the month in which the work was actually completed. Failure to timely submit such information shall constitute a waiver if any claim for monetary damage.

Delete Subsection 109.05 on page 93 and substitute the following:

907-109.05--Eliminated Items. The Department shall have the right to eliminate portions of the Contract relating to any of the engineering services or any of the construction services set forth therein. When the Contractor is notified of the elimination of portions of the Contract work, the Department will reimburse the Contractor for actual work done and all costs incurred prior to the notification.

When a major item is eliminated, the Contractor will be reimbursed for substantiated unrecovered overhead costs but not to exceed five percent of the original contract value of the item as shown in the Escrow Proposal Documents. The Contractor shall not be entitled to nor shall the Commission, the Department, or any of its officers or employees be subjected to any liability or damages.

The Contractor upon request will be paid substantiated actual costs for materials, which are in excess of those used and paid for in the completed work that were mobilized prior to notification of elimination or reduction of a major item. Materials which otherwise would have been required prior to such notification and which are on the order that cannot be cancelled may be included in the material to be paid for by the Department. No payment will be allowed for materials in excess of the quantity required under the Contract

Points of delivery for the reimbursed materials shall be agreeable to the Department. The Contractor shall make delivery at such a point and the additional transportation cost, if any, will be reimbursed by the Department.

Mobilization of material as indicated in this provision shall be understood to be materials which qualify for partial payment under the provisions of Subsection 907-109.06 and cannot be reasonably used by the Contractor in other work under contract.

At the option of the Department, living or perishable plant material, seeds, other materials and warehouse items mobilized for the work may be purchased by the Department.

All mobilized materials for which payment is made shall become the property of the Department, and the Contractor shall furnish the Engineer satisfactory title or approved evidence of ownership.

907-109.06--Partial Payments.

Delete Subsection 907-109.06.1 beginning on page 93 and substitute the following:

907-109.06.1--General. The Contractor shall submit a Project Payment Schedule (PPS) for the contracted Work a minimum of 30 days prior to its initial application for partial payment. This schedule will provide a breakdown of values for the contracted Work aggregating the Contract price, and will be the basis for partial payments. The breakdown will demonstrate reasonable, identifiable, and measurable components of the Work. The sum of all values listed for each element shall be equal to the Contract price proposed for that element as set forth in the Contractor's Project Payment Schedule. The Work shall be subdivided into component parts in sufficient detail to serve as the basis for progress payments and price adjustments, positive and negative. Prices will include a pro rata amount of overhead and profit applicable to each item. The Department may reject the Project Payment Schedule if it fails to provide reasonable detail, any prices are excessively unbalanced, or fails to account for the entire Contract fixed price.

The Contractor shall submit to the Engineer an application for each payment, the cut-off date for receiving submittal shall be the 20th of each month, unless changed by MDOT. A Construction Certificate (Attachment to SP 907-109.06.1) must be attached to each payment application. The Contractor shall include, in each application for payment, a schedule of the percentages of the various parts of the Work completed that, the quantities placed during the current pay period, a running total of all quantities placed to date, OCR-484 and all Contractor Payrolls. The Contractor shall also submit test reports and/or Manufacturer Certificates for materials not tested by the Department with each payment request. Applications for payment shall not be submitted more frequently than once per month. The applications for payment shall be submitted in a format acceptable to MDOT.

The Engineer shall approve all payments based upon the Contractor's compliance with the Project Payment Schedule, the Contract, Construction Certificate and the documented progress of Work. MDOT will make partial payments on the Contract monthly as Work progresses. In the event a submitted application for payment is completed incorrectly, contains defects or improprieties, or there is a good faith dispute, MDOT will so notify the Contractor within two (2) business days stating the reason or reasons the application for payment is defective or improper or the reasons for the dispute. The Contractor shall have two (2) business days in which to submit the corrected application for payment. If the corrected application is not submitted within two (2) business days, payment will be made on the following month's application for payment.

Delete Subsection 109.07 beginning on page 95 and substitute the following:

907-109.07--Blank.

Delete Subsection 109.11 beginning on page 98 and substitute the following:

907-109.11--Acceptance and Final Payment. When the Executive Director has notified the Contractor of final acceptance pursuant to Subsection 907-105.16.2 a final application for payment showing the value of the work will be prepared by the Contractor. The amount of this payment, less all previous payments and deductions required under the Contract, will be paid to the Contractor as soon as practicable. Final payment will not be made until written consent of the Contractor and the Surety has been delivered to the Contract Administration Engineer of the Department. It shall be the Contractor's responsibility to have the Surety provide the consent. Delays in final payment because of non-receipt of Surety's consent shall not be cause for the payment of interest under the provisions of Section 31-5-27 of the Mississippi Code, 1972, Annotated, for the period of time occasioned by such delay.

Acceptance by the Contractor of final payment shall operate as and shall be a release to the Commission from all claims or liability under the Contract and any act or neglect of the Commission relating to or connected with the Contract.

Attachment to Special Provision 907-109.06.1

CONSTRUCTION CERTIFICATE

TO: Mississippi Department of Transportation

FROM: _____

INVOICE REFERENCE NUMBER: _____

PAY PERIOD COVERED BY REFERENCED INVOICE: _____

PROJECT NUMBER: _____

This Construction Certificate is made by ("Contractor"), in accordance with the Design/Build Contract, by and between the Contractor and the Mississippi Transportation Commission and in compliance with the requirements of that Contract.

Capitalized terms used in this Construction Certificate shall have the meanings and definitions given them in the Contract.

This Construction Certificate is submitted in connection with Contractor's invoice referenced above and in order to induce Commission to make to Contractor a progress payment, pursuant to Special Provision No. 907-109.06.1 of the Contract Special provisions. To this end, Contractor hereby certifies, represents, warrants and covenants as follows:

1. Other than as set forth in writing and attached hereto and marked "Exhibit 1", Contractor is aware of no claim, dispute, circumstance or fact which Contractor asserts gives rise to a Supplemental Agreement for extension of time or addition to or increase in the Contract Price. If there are no such claims, disputes, circumstances or facts of which Contractor is aware, Exhibit 1 shall state "None." If no such claims, disputes, circumstances or facts are set forth on Exhibit 1, any such claim, dispute, circumstance or fact of which Contractor is aware is hereby waived by Contractor.

2. Pursuant to Special Provision No. 907-108.03.1.9.2 Progress Narrative Report of the Contract Special provisions, attached hereto and marked "Exhibit 2" is a description, in detail sufficient for independent verification, of the Work that has been performed and is being invoiced.

3. Pursuant to Special Provision No. 907-109.06.2 Advancement on Materials of the Contract Special Provisions, attached hereto and marked "Exhibit 3" is a description, in detail sufficient for independent verification, of all newly stored, Stored Materials and all adjustments for Stored Materials incorporated into the Project in the then immediately preceding progress payment.

4. Pursuant to Special Provision No. 907-109.6.2 Advancement on Materials of the Contract Special Provisions, Contractor certifies that all such Stored Materials to which Contractor holds title and which are described in Exhibit 3 hereto were either obtained and properly stored or removed from storage and incorporated into the Work in the immediately preceding payment period; Exhibit 3 states which such Stored Materials were obtained and properly stored and which such Stored Materials were removed form storage and incorporated into the Work.

5. Pursuant to Section V Quality Control/Quality Assurance (QC/QA) of the Contract, Contractor certifies that the Work invoiced in connection with this Design and Construction Certificate and all Work invoiced to date has been performed in a prudent manner and in compliance with the requirements of the Contract, including the Performance Criteria that all amounts have been paid by the Contractor for Work for which Previous Certificates for Payment were issued and payments received from the Owner.

6. Contractor certifies that Contractor has complied with the requirements of Section III.C.1 Periodic Progress Payment Application on page 18 of the Contract, and that all necessary materials to perform the Work have been provided by Contractor or its Subcontractors or Vendors in accordance with the provisions of the Contract, and that Contractor holds title to all such materials included in the invoice in accordance with Section III.C.1 of the Contract.

7. The undersigned is duly authorized and empowered by Contractor to execute this Construction Certificate.

By: _____ Date: _____
[Type or print name of authorized agent]

Its: _____
[Type or print title of authorized agent]

Signature of authorized agent: _____

MISSISSIPPI DEPARTMENT OF TRANSPORTATION

SPECIAL PROVISION NO. 907-226 DB **CODE: (SP)**

DATE: 03/10/2009

SUBJECT: Temporary Grassing

Section 907-226, Temporary Grassing, is hereby added to and made part of the 2004 Edition of the Mississippi Standard Specifications for Road and Bridge Construction as follows:

SECTION 907-226 -- TEMPORARY GRASSING

907-226.0l--Description. This work consists of furnishing, transporting, placing, plant establishment and all work necessary to produce rapid-growing grasses, grains or legumes to provide an initial, temporary cover of grass. This work includes ground preparation, fertilizing, seeding and mulching necessary to establish a satisfactory growth of temporary grass.

The Construction Quality Control Manager or the plans will designate areas to be temporarily grassed.

907-226.02--Materials.

907-226.02.1--Fertilizers. Fertilizers for purposes of these specifications shall be understood to include standard manufactured products consisting of single or combination ingredients and agricultural limestone.

All fertilizer shall comply with the State fertilizer laws and the requirements of these specifications.

Fertilizers shall meet the requirements of Subsection 907-715.02.2.1.

907-226.02.2--Seeds. Seeds shall meet the requirements of Subsection 715.03 and Subsection 907-715.03.2, subject to the provisions of this subsection. The Contractor shall acquire seed from persons registered with the Mississippi Department of Agriculture and Commerce.

Except for the germination requirements, bags of seeds properly labeled or tagged according to law and indicating characteristics meeting or exceeding the requirements of Subsection 907-715.03.2 will be acceptable for planting.

The Contractor should provide adequate dry storage facilities for seeds, and shall furnish access to the storage for sampling stored seed.

907-226.02.3--Mulching. The vegetative materials for mulch shall meet the requirements of Subsection 715.05.

When used, bituminous material for mulch shall be Emulsified Asphalt, Grade SS-1, meeting the requirement of Subsection 702.07.

907-226.03--Construction Requirements.

907-226.03.1--Ground Preparation.

907-226.03.1.1--General. Any equipment used for ground preparation shall be approved units suitable to perform the work and subject to the requirements of Subsection 907-108.05.

Light ground preparation should be used on areas where seeding is required to improve the coverage of partially vegetated areas.

907-226.03.1.2--Light Ground Preparation. Light ground preparation consists of scratching the surface with a close-tooth harrow, disk-harrow, or similar equipment. The depth of scratching should be at least three-quarters inch but not deep enough to damage existing grasses of the type being planted.

Aerating, moistening, or otherwise bringing the soil to a suitable condition for ground preparation shall be considered as incidental to the Work.

907-226.03.2--Fertilizing. The Contractor shall furnish all equipment necessary to properly handle, store, uniformly spread, and incorporate the specified application of fertilizer.

The Contractor shall incorporate fertilizer at a rate of 500 pounds per acre of 13-13-13 commercial fertilizer. The equivalent rate of other type fertilizers will be allowed if the equivalent percentages of Nitrogen, Phosphorus and Potassium are obtained. Fertilization shall be applied uniformly on the areas to be planted or seeded and uniformly incorporated into the soil.

Fertilizers should be applied on individual areas of not more than three acres.

All fertilizer should be incorporated within 24 hours following spreading.

907-226.03.3--Seeding.

907-226.03.3.1--General. Prior to planting the seeds, ground preparation and fertilizing should have been satisfactorily performed.

The required type of seeds, recommended rates of application and recommended planting dates of seeds are shown in the vegetation schedule on the plans. It is the Contractor's responsibility to apply an ample amount of each type of seed to produce a satisfactory growth of grass and of the seed type required.

Legume seeds should be treated in accordance with Subsection 715.03.4 immediately before sowing. Seeds should be uniformly sown over the entire area with mechanical seeders. Seeds of different sizes may necessitate separate sowing. When legume seeds become dry, they should be reinoculated.

Seeding should not be done during windy weather or when the ground is frozen, extremely wet, or in an untillable condition.

All seeds should be covered lightly with soil by raking, rolling, or other approved methods, and the area compacted with a cultipacker.

907-226.03.3.2--Plant Establishment. Plant establishment shall consist of preserving, protecting, watering, reseeding, and other work necessary to keep the seeded areas in satisfactory condition.

Areas requiring reseeding should be prepared and seeded and all other work performed as if the reseeding was the initial seeding. The types and application rates of fertilizer will be at the discretion of the

Contractor.

907-226.03.3.3--Growth and Coverage. It shall be the Contractor's responsibility to provide satisfactory growth and coverage of grasses, legumes, or combination produced from the specified seeding.

Growth and coverage on seeded areas will be considered to be in reasonably close conformity with the intent of the Contract when the type of vegetation specified, exclusive of that from seeds not expected to have germinated and shows growth at that time, has reached a point of maturity where stems or runners overlap adjacent similar growth in each direction over the entire area.

907-226.03.4--Mulching.

907-226.03.4.1--Equipment. Mulching equipment should be capable of maintaining a constant air stream which will blow or eject controlled quantities of mulch in a uniform pattern. If asphalt is used, a jet or spray nozzle for applying uniform, controlled amounts of asphalt to the vegetative material as it is ejected should be located at or near the discharge spout.

Mulch stabilizers should consist of dull blades or disks without camber and approximately 20 inches in diameter. The disks should be notched, should be spaced at approximately 8-inch intervals, and should be equipped with scrapers. The stabilizer should weigh approximately 1,000 to 1,200 pounds, should have a working width of no more than eight feet, and should be equipped with a ballast compartment, so that weight can be increased.

907-226.03.4.2--Placement of Vegetative Mulch. If required, mulching should be placed uniformly on designated areas within 24 hours following seeding unless weather conditions are such that mulching cannot be performed. Placement should begin on the windward side of areas and from tops of slopes. In its final position, the mulch should be loose enough to allow air to circulate but compact enough to partially shade the ground and reduce erosion.

The baled material should be loosened and broken thoroughly before it is fed into the machine to avoid placement of unbroken clumps.

907-226.03.4.3--Rates of Application and Anchoring Mulch. The recommended rate of application of vegetative mulch shall be as shown in the vegetation schedule in the plans. The mulch should be anchored by either the use of a mulch stabilizer or by tacking with bituminous material. If a mulch stabilizer is used, the mulch should be punched into the soil for a minimum depth of one inch. If bituminous material is used, the rate of application should be 150 gallons per acre.

Where steep slopes or other conditions are such that anchoring cannot be performed satisfactory with a mulch stabilizer, the Contractor may elect to use bituminous material applied at the time or immediately following the mulch placement.

When mulch stabilizers are used, anchoring the mulch should be performed along the contour of the ground surface.

907-226.03.4.4--Protection and Maintenance. The Contractor should take every precaution to prevent unnecessary foot and vehicular traffic.

MISSISSIPPI DEPARTMENT OF TRANSPORTATION

SPECIAL PROVISION NO. 907-227 DB **CODE: (SP)**

DATE: 03/10/2009

SUBJECT: Hydroseeding For Temporary Grassing

Section 907-227, Hydroseeding, is hereby added to the 2004 Edition of the Mississippi Standard Specifications for Road and Bridge Construction as follows:

SECTION 907-227 -- HYDROSEEDING

907-227.0l--Description. This work consists of furnishing, transporting, placing, plant establishment and all work necessary to produce rapid-growing grasses, grains or legumes to provide an initial temporary cover of grass. The seeds, fertilizers, tackifier, and mulch shall be incorporated using the hydroseeding process. These items shall be combined into a mixture and force-applied to the areas to be grassed.

907-227.02--Materials. The Contractor shall, prior to application, furnish the Construction Quality Control Manager with invoices of all materials used in the grassing operation.

907-227.02.1--Fertilizers. Fertilizers for purposes of these specifications shall be understood to include standard manufactured products consisting of single or combination ingredients.

All fertilizer shall comply with the State fertilizer laws and the requirements of these specifications.

Fertilizers shall meet the requirements of Subsection 907-02.2.1.

907-227.02.2--Seeds. Seeds shall meet the requirements of Subsection 715.03.2, subject to the provisions of this subsection. The Contractor shall acquire seed from persons registered with the Mississippi Department of Agriculture and Commerce.

Except for the germination requirements, bags of seeds properly labeled or tagged according to law and indicating characteristics meeting or exceeding the requirements of Subsection 907-715.03.2 will be acceptable for planting.

The Contractor should provide adequate dry storage facilities for seeds, and shall furnish access to the storage for sampling stored seed.

907-227.02.3--Mulching. The rate of application of fiber mulch shall be as recommended by the manufacture of the fibers mulch.

907-227.02.3.1--Wood Fiber Mulch. Wood fiber mulch shall be made from wood chip particles manufactured particularly for discharging uniformly on the ground surface when dispersed by a hydraulic water sprayer. It shall remain in uniform suspension in water under agitation and blend with grass seed and fertilizer to form a homogeneous slurry. The fibers shall intertwine physically to form a strong moisture-holding mat on the ground surface and allow rainfall to percolate the underlying soil. The fiber material shall be heat processed so as to contain no germination or growth-inhibiting factors. The mulch shall be dyed an appropriate color to facilitate the application of material using non-toxic dye.

907-227.02.3.2--Cellulose Fiber Mulch. Cellulose fiber mulch consist of recycled magazine stock products which are shredded into small pieces particular for application by hydraulic seeding equipment. It shall mix readily and uniformly under agitation with water and blend with grass seed and fertilizer to form a homogeneous slurry. When applied to the ground surface, the material shall form a strong moisture-holding mat, allow rainfall to percolate the underlying soil and remain in place until the grass root system is established. The material shall contain no growth inhibiting characteristic or organisms. The mulch shall be dyed an appropriate color to facilitate the application of material using non-toxic dye.

907-227.02.3.3--Wood/Cellulose Fiber Mulch. Wood/cellulose fiber mix hydroseeding mulch shall consist of a combination of the above wood and cellulose fibers at a ratio recommended by the manufacturer of the products.

907-227.03--Construction Requirements.

907-227.03.1--Ground Preparation. No ground preparation will be required.

907-227.03.2--Fertilizing. The Contractor shall furnish all equipment necessary to properly handle, store, uniformly spread, and incorporate the specified application of fertilizer.

The Contractor shall incorporate bag fertilizer at a rate of 1,000 pounds per acre of 13-13-13 commercial fertilizer. The equivalent rate of other type fertilizers will be allowed if the equivalent percentages of Nitrogen, Phosphorus and Potassium are obtained. Any changes in the type or rate of application of the fertilizers shall be approved by the Construction Quality Control Manager prior to being incorporated.

907-227.03.3--Seeding.

907-227.03.3.1--General. The Contractor shall use the temporary vegetation schedule in the plan for the correct types of seed and application rates, unless otherwise noted or approved by the Construction Quality Control Manager.

When a temporary vegetation schedule is not shown in the plans, the following types of seed and application rates may be used.

Spring & Summer

Browntop Millet - 20 pounds per acre - April 1 to August 31

Fall & Winter

Rye Grass - 25 pounds per acre- September 1 to March 31
Oats - 90 pounds per acre- September 1 to December 15

907-227.03.3.2--Plant Establishment. Plant establishment shall consist of preserving, protecting, watering, reseeding, mowing, and other work necessary to keep the seeded areas in satisfactory condition.

Areas requiring reseeding should be prepared and seeded and all other work performed as if the reseeding was the initial seeding. The types and application rates of fertilizer will be at the discretion of the Contractor.

907-227.03.3.3--Growth and Coverage. It shall be the Contractor's responsibility to provide satisfactory

growth and coverage of grasses, legumes, or combination produced from the specified seeding.

Growth and coverage on seeded areas will be considered to be in reasonably close conformity with the intent of the Contract when the type of vegetation specified, exclusive of that from seeds not expected to have germinated and shows growth at that time, has reached a point of maturity where stems or runners overlap adjacent similar growth in each direction over the entire area.

907-227.03.4--Mulching. At the Contractor's option, mulch may be wood fiber, cellulose fiber, or a mixture of wood and cellulose fibers. The mulch shall be applied at the rate of 1,500 pounds per acre in a mixture of water, seed and fertilizer. Any changes in the rate of application of the mulch shall be approved by the Construction Quality Control Manager prior to its use.

907-227.03.5--Equipment. Hydraulic equipment shall be used for the application of fertilizers, seeds and slurry of the prepared mulch. This equipment shall have a built-in agitation system with an operating capacity sufficient to agitate, suspend, and homogeneously mix slurry of the specified amount of fiber, fertilizer, seed and water. The slurry distribution lines shall be large enough to prevent stoppage. The discharge line shall be equipped with a set of hydraulic spray nozzles, which will provide even distribution of the slurry on the various areas to be seeded.

The seed, fertilizer, mulch and water shall all be combined into the slurry tank for distribution of all ingredients in one operation as specified herein. The materials shall be combined in a manner recommended by the manufacturer. The slurry mixture shall be so regulated that the amounts and rates of application shall result in a uniform application of all materials at rates not less than the amounts specified. Using the color of the mulch as a guide, the equipment operator shall spray the prepared seedbed with a uniform visible coat. The slurry shall be applied in a sweeping motion, in an arched stream, so as to fall like rain, allowing the mulch to build upon each other until an even coat is achieved.

907-227.03.6--Protection and Maintenance. The Contractor should take every precaution to prevent unnecessary foot and vehicular traffic.

MISSISSIPPI DEPARTMENT OF TRANSPORTATION

SPECIAL PROVISION NO. 907-304 DB **CODE: (SP)**

DATE: 06/01/2009

SUBJECT: Granular Courses

Section 907-304, Granular Courses, of the 2004 Edition of the Mississippi Standard Specifications for Road and Bridge Construction is hereby amended as follows:

907-304.02--Materials. After the first paragraph of Subsection 304.02.1 on page 183, add the following:

When the contract includes pay item 907-304-E, Granular Material, LVM, RAP, it shall be milled recycled asphalt pavement and shall be visually inspected by the Engineer to insure it is free from chunks and deleterious materials.

Crushed concrete meeting the requirements of Subsection 907-703.04.4 may be used in lieu of other crushed courses specificed in the contract.

907-304.03--Construction Requirements.

907-304.03.5--Shaping, Compacting and Finishing. Delete the sixth paragraph of Subsection 304.03.5 on page 185.

Delete the first table in Subsection 304.03.5 on page 186 and substitute the following:

Granular Material Class	Lot Average	Individual Test
7,8,9 or 10	97.0	93.0
5 or 6	99.0	95.0
3 or 4	100.0	96.0
1 or 2	102.0	98.0
Crushed Courses*	99.0	95.0

* When placed on filter fabric on untreated subgrade, the individual tests and the average of the five (5) tests shall equal or exceed the following values:

Lot Average	Individual Test
96.0	92.0

Before the last paragraph of Subsection 304.03.5 on page 186, add the following:

Unless otherwise specified, density for granular material, RAP, shall be achieved by two passes of an approved roller and density tests will not be required.

Delete Subsections 304.04 and 304.05 on pages 186 and 187 and substitute the following:

907-304.04--Blank.

907-304.05--Blank.

MISSISSIPPI DEPARTMENT OF TRANSPORTATION

SPECIAL PROVISION NO. 907-307 DB **CODE: (SP)**

DATE: 03/10/2009

SUBJECT: Lime Treated Courses

Section 307, Lime Treated Courses, of the 2004 Edition of the Mississippi Standard Specifications for Road and Bridge Construction is hereby amended as follows:

907-307.02--Materials.

907-307.02.4--Curing Seals. After "EA-1," in the first sentence of Subsection 307.02.4 on page 195, add "AE-P,".

907-307.02.5--Soil-Lime Design. Delete the first paragraph of Subsection 307.02.5 on page 195 and substitute the following:

The design of soil-lime courses shall be performed by the Contractor's Laboratory and reviewed by MDOT's Central Laboratory. At least 45 days prior to the proposed use of a lime course, the Contractor shall make available materials proposed for use in the mixture for sampling and testing by MDOT as the Engineer may consider necessary for the verification of a mix design.

Changes in source of lime shall not be made without approval. Approval will be based on verification of a mix design.

907-307.03--Construction Requirements.

907-307.03.2--Equipment. Delete the second paragraph of Subsection 307.03.2 on pages 196 & 197.

Delete Subsections 307.04 and 307.05 on pages 201 and 202 and substitute the following:

907-307.04--Blank.

907-307.05--Blank.

MISSISSIPPI DEPARTMENT OF TRANSPORTATION

SPECIAL PROVISION NO. 907-308 DB **CODE: (SP)**

DATE: 03/10/2009

SUBJECT: Portland Cement Treated Courses

Section 308, Portland Cement Treated Courses, of the 2004 Edition of the Mississippi Standard Specifications for Road and Bridge Construction is hereby amended as follows:

907-308.02.4--Curing Seals. After "EA-1," in the first sentence of Subsection 308.02.4 on page 204, add "AE-P,".

907-308.02.5—Soil-Cement Design. Delete in toto and substitute the following:

The design of soil-cement courses shall be performed by the Contractor's Laboratory and reviewed by MDOT's Central Laboratory. At least 21 days prior to the proposed use of a cement course, the Contractor shall make available materials proposed for use in the mixture for sampling and testing by MDOT as the Engineer may consider necessary for the verification of a mix design.

907-308.03.2--Equipment.

907-308.03.2.1--General. Delete the second paragraph of Subsection 308.03.2.1 on page 206.

Delete Subsection 308.03.7.2 on page 209 and substitute the following:

907-308.03.7.2--Weather Limitations. No cement or cement treated material shall be applied or placed when the temperature is below 45°F nor when the Construction Quality Control Manager determines, based on the latest information available from the National Weather Service, that the forecast temperature will fall below 45°F within the next five (5) days in the area in which the Project is located. No cement or cement treated material shall be placed on a frozen foundation or mixed with frozen material.

907-308.03.9.2--Density. Delete the second paragraph of Subsection 308.03.9.2 on page 213 and substitute the following:

Soil Cement Treatment of Subgrade. The lot will be divided into five (5) approximately equal sublots with one (1) density test taken at random in each sublot. The average of the five (5) density tests shall equal or exceed 96.0% with no single density test below 94.0%. Sublots with a density below 94.0% shall be corrected and retested for acceptance.
Each lot of work found not to meet the density requirement of 96.0% of maximum density shall be evaluated by the Lead Design Engineer for suitability.

Soil Cement Treatment of Base. The lot will be divided into five (5) approximately equal sublots with one (1) density test taken at random in each sublot. The average of the five (5) density tests shall equal or exceed 97.0% with no single density test below 95.0%. Sublots with a density below 95.0% shall be corrected and retested for acceptance.

Each lot of work found not to meet the density requirement of 97.0% of maximum density shall be

evaluated by the Lead Design Engineer for suitability.

Soil Cement Treatment of Irregular Areas. Density of irregular areas shall be rolled to highest stability. Irregular areas shall be defined as preleveling, wedging [less than 50% of width greater than minimum lift thickness], ramp pads, irregular shoulder areas, median crossovers, turnouts, and other areas where an established rolling pattern cannot be obtained.

907-308.03.10--Protection and Curing. Delete the second paragraph of Subsection 308.03.10 on page 213 and substitute the following:

When the treated course is the subgrade, a subsequent course shall not be placed on the sealed course for at least seven (7) calendar days. During this seven (7)-day period, the treated course shall not be subjected to any type of traffic and equipment.

When the treated course is the base, the Contractor shall use the mix design (seven (7)-day or 14-day) as specified on the Mix Design. Depending on the specified mix design, a subsequent course shall not be placed on the sealed course for at least seven (7) or 14 calendar days. During this period, the treated course shall not be subjected to any type of traffic and equipment.

Delete Subsections 308.04 and 308.05 on pages 214 and 215 and substitute the following:

907-308.04--Blank.

907-308.05--Blank.

MISSISSIPPI DEPARTMENT OF TRANSPORTATION

SPECIAL PROVISION NO. 907-311 DB **CODE: (SP)**

DATE: 03/10/2009

SUBJECT: Lime-Fly Ash Treated Courses

Section 311, Lime-Fly Ash Treated Courses, of the 2004 Edition of the Mississippi Standard Specifications for Road and Bridge Construction is hereby amended as follows:

907-311.02--Materials.

907-311.02.1—Soil-Lime-Fly Ash Design. Delete the first paragraph of Subsection 311.02.1 on page 223 and substitute the following:

The design of soil-lime-fly ash courses shall be performed by the Contractor's Laboratory and reviewed by MDOT's Central Laboratory. At least 45 days prior to the proposed use of a lime-fly ash course, the Contractor shall make available materials proposed for use in the mixture for sampling and testing by MDOT as the Engineer may consider necessary for the verification of a mix design.

907-311.02.2--Curing Seals. After "EA-1," in the first sentence of 311.02.2 on page 223, add "AE-P,".

907-311.03--Construction Requirements. Delete Subsection 311.03.2 on pages 223 & 224, and substitute the following:

907-311.03.2--Equipment. Equipment necessary for the proper prosecution of the Work shall meet the applicable requirements of Subsection 907-308.03.2.

Delete Subsection 311.03.7 on page 225, and substitute the following:

907-311.03.7--Shaping, Compacting, and Finishing.

907-311.03.7.1--General. The mixed material shall be shaped as required immediately after mixing, or delivery to the roadbed in the case of central plant mixed material. Initial compaction shall begin immediately, and machining and compacting shall continue until the entire depth and width of the course is compacted to the required density within two (2) hours of the time of beginning mixing. Compaction shall be by equipment and methods which do not result in lamination.

Areas inaccessible to rollers shall be compacted to the required density by other approved methods.

The addition of thin layers of treated material in order to conform to cross sectional or grade requirements will not be permitted.

Compaction by vibration shall not be performed after the lime fly-ash has taken its initial set. Vibratory compaction of a section shall be completed within one (1) hour.

During compaction, a spike-tooth harrow or other suitable equipment shall be used as required to prevent lamination.

The surface shall then be reshaped to the required lines, grades, and cross section, and if necessary shall be lightly scarified to remove imprints left by the compacting or shaping equipment. The surface shall then be sprinkled as necessary and thoroughly rolled with a pneumatic roller, and if the mixture contains plus No. 4 aggregate, at least one complete coverage of the section shall be made with a steel-wheel tandem roller.

Surface compaction and finishing for the entire section shall be performed in a manner that will produce a smooth, closely knit surface, free from laminations, construction cracks, ridges, or loose material, and conforming to the crown, grade, and lines stipulated within four (4) hours after the beginning of mixing.

Upon completion of compaction, testing will be performed in accordance with Subsections 700.03 and 700.04.

907-311.03.7.2--Density. Determination of acceptance of compaction of treated courses for required density will be performed on a lot to lot basis. Each lot will be each 2,500 linear feet per layer placed. At the discretion of the Construction Quality Control Manager, a residual portion of a lot completed during a day's operation may be considered a separate lot or may be included in the previous or subsequent lot, except that any day's operation of less than one full lot will be considered a lot.

The lot will be divided into five (5) approximately equal sublots with one (1) density test taken at random in each sublot. The average of the five (5) density tests shall equal or exceed 98.0% with no single density test below 94.0%. Sublots with a density below 94.0% shall be corrected and retested for acceptance.

For treated materials other than for design soils and bases, the required density will be set out elsewhere in the Contract.

907-311.03.7.3--Width, Thickness, and Surface Requirements. For the purpose of determining reasonable conformity with the designated width of a treated course, it shall be understood that the width of a treated course shall not vary from the designated edge lines by more than plus or minus one (1) inch.

For the purpose of determining reasonable conformance with the designated thickness of a treated course, it shall be understood that the depth of the treated course shall not vary from designated thickness by more than minus one-half (1/2) inch or plus one (1) inch.

The finished surface of a treated course shall conform to the requirements shown on the plans, within the tolerances allowable under Section 321.

Delete Subsections 311.04 and 311.05 beginning on page 225 and substitute the following:

907-311.04--Blank.

907-311.05--Blank.

MISSISSIPPI DEPARTMENT OF TRANSPORTATION

SPECIAL PROVISION NO. 907-401 DB **CODE: (SP)**

DATE: 03/10/2009

SUBJECT: Hot Mix Asphalt (HMA)

Section 401, Hot Mix Asphalt (HMA) - General, of the 2004 Edition of the Mississippi Standard Specifications for Road and Bridge Construction is hereby amended as follows:

Delete the first sentence of Subsection 401.02.5.7 on page 246 and substitute the following:

A request for a JMF adjustment signed by a CAT-II may be made to the Construction Quality Control Manager by the Contractor.

Delete Subsection 401.02.5.8 beginning on page 247 in toto and substitute the following:

907-401.02.5.8--Actions and Adjustments. Based on the process control test results for any property in question, the following actions shall be taken or adjustments made when appropriate:

(a) When the running average trends toward the warning limits, the Contractor shall consider taking corrective action. The corrective action, if any, shall be documented. All tests shall be part of the Contract files and shall be included in the running average calculations.

(b) The Contractor shall notify the Construction Quality Control Manager whenever the running average exceeds the warning limits.

(c) If two consecutive running averages exceed the warning limit, the Contractor shall stop production and make adjustments. Production shall only be restarted after notifying the Construction Quality Control Manager of the adjustments made.

(d) If the adjustment made under (c) improves the process such that the running average after four additional tests is within the warning limits, the Contractor may continue production.

(e) If the adjustment made under (c) does not improve the process and the running average after four additional tests stays in the warning band, the mixture will be considered unsatisfactory. Unsatisfactory mixtures shall be removed and replaced starting from the stop point to the point when the running average is back within the warning limits unless the mixture is deemed acceptable by the Construction Quality Control Manager and the Engineer.

(f) Failure to stop production and make adjustments when required shall subject all mixture produced from the stop point to the point when the running average is back within the warning limits to be considered unsatisfactory.

(g) If the running average exceeds the JMF limits, the Contractor shall stop production and make adjustments. Production shall only be restarted after notifying the Engineer and Construction Quality Control Manager of the adjustments made.

(h) All materials for which the running average exceeds the JMF limits will be considered unacceptable and shall be removed and replaced by the Contractor. The Engineer will determine the quantity of material to be replaced based on a review of the individual testing

data which make up the running average in question and an inspection of the completed pavement.

(i) Single test results shall be compared to 1.7 times the warning and JMF limits. If the test results verified by QA testing, within allowable differences in Subsection 907-401.02.6.2, exceed these limits, the quantity of material represented by the test(s) shall be removed and replaced unless deemed acceptable by the Construction Quality Control Manager and the Engineer. Single test limits will be used when insufficient tonnage is produced to require four (4) Contractor's tests.

(j) The above corrective action will also apply for a mixture when the Contractor's testing data has been proven incorrect. The Contractor's data will be considered incorrect when; 1) the Contractor's tests and the Engineer's tests do not agree within the allowable differences given in Subsection 907-401.02.6.2 and the difference can not be resolved, or 2) the Engineer's tests indicates that production is outside the JMF limits and the results have been verified by the Materials Division. The Engineer's data will be used in place of the Contractor's data.

Delete in toto Subsection 401.02.6.2 on pages 248 and 249, and substitute:

907-401.02.6.2--Assurance Program for Mixture Quality. The Engineer will conduct a quality assurance program. The quality assurance program will be accomplished as follows:

1) Conducting verification tests.
2) Validate Contractor test results.
3) Periodically observing Contractor quality control sampling and testing.
4) Monitoring required quality control charts and test results.
5) Sampling and testing materials at any time and at any point in the production or laydown process.

The rounding of all test results will be in accordance with Subsection 700.04.

The Engineer will conduct verification tests on samples taken by the Contractor under the direct supervision of the Engineer at a time specified by the Engineer. The frequency will be equal to or greater than ten percent (10%) of the tests required for Contractor quality control and the data will be provided to the Contractor within two (2) asphalt mixture production days after the sample has been obtained by the Engineer. At least one (1) sample shall be tested from the first two (2) days of production. All testing and data analysis shall be performed by a Certified Asphalt Technician-I (CAT-I) or by an assistant under the direct supervision of the CAT-I. Certification shall be in accordance with MDOT *HMA Technician Certification Program* chapter in the Materials Division Inspection, Testing, and Certification Manual. MDOT shall post a chart giving the names and telephone numbers for the personnel responsible for the assurance program.

The Engineer shall be allowed to inspect Contractor testing equipment and equipment calibration records to confirm both calibration and condition. The Contractor shall calibrate and correlate all testing equipment in accordance with the latest versions of MDOT's Test Methods and AASHTO Designation: R 18.

Random differences between the Engineer's verification tests and the current running average of four (4) quality control tests at the time of obtaining the verification sample will be considered acceptable if within the following limits:

Item	Allowable Differences
Sieve - % Passing	
3/8-inch and above	6.0
No. 4	5.0
No. 8	4.0
No. 16, for 4.75 mm mixtures ONLY	3.5
No. 30	3.5
No. 200	2.0
AC Content	0.4
Specimen Bulk SG, Gmb @ N_{Design}	0.030
Maximum SG, Gmm	0.020

If four (4) quality control tests have not been tested prior to the time of the first verification test, the verification test results will be compared to the average of the preceding quality control tests. If the verification test is the first material tested on each Phase of the Project or if a significant process adjustment was made just prior to the verification test, the verification test results will be compared to the average of four (4) subsequent quality control test results. For all other cases after a significant process adjustment, the verification test results will be compared to the average of the preceding quality control tests (taken after the adjustment) as in the case of a new project start-up when four (4) quality control tests are not available.

In the event that; 1) the comparison of the Contractor's running average quality control data and Engineer's quality assurance verification test results are outside the allowable differences in the above table, or 2) if a bias exists between the results, such that one of the results is predominately higher or lower than the other, and the Engineer's results fail to meet the JMF control limits, the Engineer will investigate the reason immediately. As soon as the need for an investigation becomes known, the Engineer will increase the quality assurance sampling rate to the same frequency required for Contractor testing. The additional samples obtained by the Engineer may be used as part of the investigation process or for routine quality assurance verification tests. The Engineer's investigation may include testing of the remaining quality control split samples, review and observation of the Contractor's testing procedures and equipment, and a comparison of split sample test results by the Contractor quality control laboratory, MDOT quality assurance laboratory and the Materials Division laboratory. The procedures outlined in the latest edition of MDOT's Field Manual for HMA may be used as a guide for the investigation. In the event that the Contractor's results are determined to be incorrect, the Engineer's results will be used for the quality control data.

The Engineer will periodically witness the sampling and testing being performed by the Contractor. The Engineer, both verbally and in writing, will promptly notify the Contractor of any observed deficiencies. When differences exist between the Contractor and the Engineer which cannot be resolved, a decision will be made by the State Materials Engineer, acting as the referee. The Contractor will be promptly notified in writing of the decision. If the deficiencies are not corrected, the Engineer will stop production until corrective action is taken.

907-401.02.6.4.1--Roadway Density. Delete subparagraphs 1., 2., and 3. on page 251 and substitute the following:

1. For all leveling lifts, when full lane width and with a thickness as specified in the table in Subsection 401.02.4, the required density shall be 92.0 percent of maximum density.

2. For all single lift overlays, with or without leveling and/or milling, the required lot density shall be 92.0 percent of maximum density.

3. For all multiple lift overlays of two (2) or more lifts excluding leveling lifts, the required lot density of the bottom lift shall be 92.0 percent of maximum density. The required lot density for all subsequent lifts shall be 93.0 percent of maximum density.

4. For all pavements on new construction, the required lot density for all lifts shall be 93.0 percent of maximum density.

Delete the second full paragraph on page 251 and substitute the following:

When it is determined that the density for a lot(s) is below the required density (92% or 93%) but not lower than 90% or 91% of the maximum density, respectively, the Construction Quality Control Manager and the Engineer shall evaluate the lot(s) in question and make a determination as to whether the lot(s) may remain in place, or direct the Contractor to remove and replace the lot(s).

907-401.03.1.2--Tack Coat. Delete the three (3) sentences of Subsection 401.03.1.2 on page 259, and substitute the following:

Tack coat shall be applied to previously placed HMA and between lifts, unless otherwise directed by the Construction Quality Control Manager. Tack coat shall be applied with a distributor spray bar. A hand wand will only be allowed for applying tack coat on ramp pads, irregular shoulder areas, median crossovers, turnouts, or other irregular areas. Bituminous materials and application rates for tack coat shall be as specified in Table 410-A on page 293. Construction requirements shall be in accordance with Subsection 907-407.03 of the Standard Specifications.

907-401.03.1.4--Density. Delete the first sentence of the first paragraph of Subsection 401.03.1.4 on page 259 and substitute the following:

The lot density for all dense graded pavement lifts, except as provided below for preleveling, wedging [less than 50% of width greater than minimum lift thickness], ramp pads, irregular shoulder areas, median crossovers, turnouts, or other areas where the established rolling pattern cannot be performed, shall not be less than the specified percent (92% or 93.0%) of the maximum density based on AASHTO Designation: T 209 for the day's production. For all leveling lifts, when full lane width and with a thickness as specified in the table in Subsection 401.02.4, the required lot density shall be 92.0% of maximum density.

907-401.03.9--Material Transfer Equipment. Delete the paragraph in Subsection 401.03.9 on page 264 and substitute the following:

Excluding the areas mentioned below, the material transferred from the hauling unit when placing the top lift, or the top two (2) lifts of a multi-lift HMA pavement with density requirements, shall be remixed prior to being placed in the paver hopper or insert by using an approved Materials Transfer Device. Information on approved devices can be obtained from the State Construction Engineer. Areas excluded from this requirement include: leveling courses, temporary work of short duration, detours, bridge replacement projects having less than 1,000 feet of pavement on each side of the structure, acceleration and deceleration lanes less than 1,000 feet in length, tapered sections, transition sections for width, shoulders less than ten (10) feet in width, crossovers, ramps, side street returns and other areas designated by the Construction Quality Control Manager.

MISSISSIPPI DEPARTMENT OF TRANSPORTATION

SPECIAL PROVISION NO. 907-401-4 DB **CODE: (SP)**

DATE: 12/18/2009

SUBJECT: Warm Mix Asphalt (WMA)

Section 401, Hot Mix Asphalt (HMA) - General, of the 2004 Edition of the Mississippi Standard Specifications for Road and Bridge Construction is hereby amended as follows:

907-401.01--Description. Delete the first sentence of Subsection 401.01 on page 236, and substitute the following:

These specifications include general requirements that are applicable to all types of Hot Mix Asphalt (HMA) or Warm Mix Asphalt (WMA) along with the specific requirements for each particular mixture when deviations from the general requirements are necessary.

907-401.02--Materials. Delete Subsection 401.02.2 on page 239, and substitute the follows:

907-401.02.2--WMA Products and Processes. The Department will maintain a list of qualified WMA products and processes. No product or process shall be used unless it appears on this list.

The Contractor may propose other products or processes for approval by the Product Evaluation Committee. Documentation shall be provided to demonstrate laboratory performance, field performance, and construction experience.

907-401.03--Construction Requirements.

907-401.03.1.1--Weather Limitations. After the last paragraph of Subsection 401.03.1.1 on page 259, add the follows:

NOTE: When WMA products and processes are utilized, the air and pavement temperature at the time of placement shall equal or exceed 40º F, regardless of compacted lift thickness.

907-401.03.8--Preparation of Mixture. Delete the sentence in Subsection 401.03.8 on page 264, and substitute the following:

The temperature of the HMA mixture, when discharged from the mixer, shall not exceed 340º F. The temperature of the WMA mixture, when discharged from the mixer, shall not exceed 280º F.

MISSISSIPPI DEPARTMENT OF TRANSPORTATION

SPECIAL PROVISION NO. 907-403 DB **CODE: (SP)**

DATE: 03/10/2009

SUBJECT: Hot Mix Asphalt Pavement (HMA)

Section 403, Hot Mix Asphalt Pavement, of the 2004 Edition of the Mississippi Standard Specifications for Road and Bridge Construction is hereby amended as follows:

907-403.03--Construction Requirements.

907-403.03.2--Smoothness Tolerances. Delete the third full paragraph on page 268.

Delete the fifth full paragraph on page 268 and substitute the following:

When approved by the Construction Quality Control Manager, a short ski or shoe may be substituted for a long ski on the second paving operation working in tandem.

During the finishing and compacting of pavement lifts, it shall be the responsibility of the Contractor to check the surface and joints for progress toward conformance to surface requirements set forth herein. Variations from surface requirements exceeding the allowable tolerances shall be corrected.

Delete the last paragraph on page 268, the table at the top of page 269 and the first three paragraphs on page 269.

Delete Subsection 403.03.3 in toto and substitute the following:

907-403.03.3--Thickness Requirements. Hot Mix asphalt overlay lifts shall be constructed as nearly in accordance with the thickness shown on the plans as the underlying pavement and foundation will permit. Periodic and cumulative yield tests will be made to determine practicable conformity to the thickness of each lift. The Construction Quality Control Manager may order modifications in placement thicknesses to prevent unwarranted variations in plan quantities.

When the paver is operating off an established grade line, no thickness determination will be required for the various lifts of pavement. It is understood that the tolerances from design grade will control the thickness requirements.

When grade stakes are eliminated as outlined in Subsection 907-403.03.2(d) and where resulting in the placement of two (2) or more lifts, acceptance will be determined on a lot to lot basis by cores taken from the completed pavement. Lots will be coincidental with acceptance lots for the surface lift as provided in Subsection 907-401.02.6.4, except that only lots resulting from the placement of mainline surface lift will be used for thickness assessment. One (1) core will be obtained at random from each lot. Irregular areas will not be cored.

When the average thickness of all the cores from the lots representing a day's production (excluding any discarded by the Engineer for justifiable reason) is within 3/8 of an inch of the total pavement thickness shown on the plans, excluding lift(s) placed using an established grade line, corrective action will not be required.

When the average thickness of all the cores from the lots representing a day's production is deficient in thickness by more than 3/8 of an inch of the total pavement thickness shown on the plans, excluding lift(s) placed using an established grade line, the deficiency shall be documented as Nonconforming Work. The thickness of the overlay shall be equal to the thickness deficiency but no less than the minimum single lift laying thickness for the specified mixture.

The cores shall be cut and removed by the Contractor in the presence of the Construction Quality Control Manager's representative and turned over to the Construction Quality Control Manager's representative for further handling. The Contractor shall fill each core hole with surface lift mixture and compact to the satisfaction of the Construction Quality Control Manager within 24 hours after coring.

Delete Subsection 403.03.4 beginning on page 270 in toto and substitute the following:

907-403.03.4—Blank.

907-403.03.5--Overlays or Widening and Overlays. In addition to the requirements of Subsection 907-403.03.1 through 907-403.03.3, the following requirements will be applicable when an existing pavement is to be overlaid or widened and overlaid.

907-403.03.5.1--Blank.

907-403.03.5.2—Blank.

Delete Subsection 403.03.5.4 on page 273 in toto and substitute the following:

907-403.03.5.4--Patching. Existing pavement which has failed or unsatisfactorily stabilized shall be removed as directed.

Backfill shall consist of hot mix asphalt or a combination of compacted layers of granular material and hot mix asphalt. Unless otherwise specified, the Construction Quality Control Manager will make this determination based on depth and field conditions.

Delete Subsection 403.03.5.5 beginning on page 273 in toto and substitute the following:

907-403.03.5.5--Preliminary Leveling. All irregularities of the existing pavement that result in a thickness greater than approximately two and one-half inches (2 ½") for the first overall leveling lift shall be corrected by skin patching, feather edging or a wedge lift and shall be approved by the Construction Quality Control Manager in advance of placing the first overall lift.

Delete Subsections 403.04, 403.05, 403.05.1 and 403.05.2 beginning on page 274 and substitute the following:

907-403.04—Blank.

907-403.05—Blank.

907-403.05.1—Blank.

907-403.05.2—Blank.

MISSISSIPPI DEPARTMENT OF TRANSPORTATION

SPECIAL PROVISION NO. 907-403-9 DB **CODE: (SP)**

DATE: 01/28/2010

SUBJECT: Warm Mix Asphalt (WMA)

Section 403, Hot Bituminous Pavement, of the 2004 Edition of the Mississippi Standard Specifications for Road and Bridge Construction is hereby amended as follows:

907-403.01--Description. Delete the first sentence of Subsection 403.01 on page 266, and substitute the following:

This work consists of constructing one or more lifts of HMA or WMA pavement meeting the requirements of Section 401 on a prepared surface in accordance with the requirements of this section and in reasonably close conformity with the lines, grade, thicknesses, and typical cross sections shown on the plans or established by the Engineer.

907-403.05—Blank.

MISSISSIPPI DEPARTMENT OF TRANSPORTATION

SPECIAL PROVISION NO. 907-407 DB **CODE: (SP)**

DATE: 03/10/2009

SUBJECT: Tack Coat

Section 407, Tack Coat, of the 2004 Edition of the Mississippi Standard Specifications for Road and Bridge Construction is hereby amended as follows:

907-407.02.1--Bituminous Material. Delete the second sentence of the first paragraph of Subsection 407.02.1 on page 281, and substitute the following:

When not specified, the materials shall be as specified in Table 410-A on page 293.

907-407.03.3--Application of Bituminous Material. Delete the first paragraph of Subsection 407.03.3 on page 281, and substitute the following.

Tack coat shall be applied with a distributor spray bar. A hand wand will only be allowed for applying tack coat on ramp pads, irregular shoulder areas, median crossovers, turnouts, or other irregular areas. Bituminous materials and application rates for tack coat shall be as specified in Table 410-A on page 293. Tack coat shall not be applied during wet or cold weather, after sunset, or to a wet surface. Emulsions shall be allowed to "break" prior to superimposed construction.

907-407.04--Blank.

907-407.05--Blank.

MISSISSIPPI DEPARTMENT OF TRANSPORTATION

SPECIAL PROVISION NO. 907-502 DB **CODE: (SP)**

DATE: 03/10/2009

SUBJECT: Portland Cement Concrete Bridge End Pavement

Delete the last sentence of the second full paragraph of Subsection 502.03.1 on page 329.

Delete Subsection 502.04 and substitute the following:

907-502.04—Blank.

Delete Subsection 502.05 and substitute the following:

907-502.05—Blank.

MISSISSIPPI DEPARTMENT OF TRANSPORTATION

SPECIAL PROVISION 907-510-1 **CODE: (SP)**

DATE: **09/23/2009**

SUBJECT: **Partial Depth Repair of Concrete**

PROJECT:

Section 510, Repair of Concrete Pavement, 2004 Edition of the Mississippi Standard Specifications for Road and Bridge Construction is deleted in toto and replaced as follows:

SECTION 907-510 – PARTIAL DEPTH REPAIR OF CONCRETE

907-510.01--Description. This work consists of surface preparation (including cleaning) and placement of partial depth repair of concrete in spalled areas of concrete pavement or concrete bridge decks, or other areas directed by the Engineer of Record, in accordance with these specifications and in reasonably close conformity with the lines and grades of the existing pavement or bridge deck, or as specified on the Plans.

907-510.02--Materials.

907-510.02.1--General. Concrete produced and controlled from this specification will be accepted upon proper certification of concrete production through verification by job site acceptance criteria performed by the Contractor's Construction Quality Control.

The materials for partial depth repair of concrete, when sampled and tested in accordance with 700.03, shall meet the requirements of the following Subsections:

Portland Cement	701.01 and 701.02
Fine Aggregate	703.02
Coarse Aggregate	703.03
Joint Material	707.01, 707.02, and 707.07
Reinforcing Steel	711.02
Structural Synthetic Fibers	711.04
Liquid Membrane Compound	713.01.02
Admixtures	713.02
Fly Ash	714.05
Water	714.01.1 and 714.01.2

907-510.02.2--Mixture Design. The concrete mixture shall be designed by a technician holding a current MDOT Certified Class III certification representing the Contractor to meet the requirements set out in the following:

Minimum Cementitious Content	658 lb/cy
Minimum Fly Ash Replacement Required	15%
Coarse Aggregate Size	#7 or #8
Coarse Aggregate Type	see Subsection 907-510.02.2.1
Synthetic Structural Fibers	see Subsection 907-510.02.2.2
Total Air Content	3 - 6%

Maximum Slump	6 inches
Required Compressive Strength	2500 psi in time required by the Plans

Either a Type F or Type G water reducing chemical admixture shall be used in the concrete mixture. No other water reducing chemical admixtures shall be used in the mixture.

907-510.02.2.1--Coarse Aggregate Requirements. The coarse aggregate for areas of concrete repair which will be milled to obtain the final grade requirements shall be limestone. All other areas may use either limestone or gravel as the coarse aggregate.

907-510.02.2.2--Synthetic Structural Fiber Requirements. Concrete mixture used on bridge decks or for other single areas of concrete repair 25 square feet or greater shall contain synthetic structural fibers added in accordance with the requirements of Subsection 711.04 based on the dosage required for the applicable synthetic structural fiber per the Department's Approved Products List.

907-510.02.2.3--Basis of Proportioning. The Contractor shall establish the proportions based on a laboratory trial mixture in accordance with the requirements of Subsection 804.02.10.1.2 with the following exception: the minimum required average strength of the laboratory trail mixture listed in Subsection 804.02.10.1.2.e shall not be required.

907-510.02.3--Batching and Mixing.

907-510.02.3.1--Job Site Batching and Mixing. For concrete mixture batched and mixed at the job site, the mixing equipment shall meet the requirements for a power-driven, revolving drum, tilting concrete mixer or other in accordance with AASHTO Designation: R39. Hand mixing shall not be allowed.

Measuring of materials shall be in individual buckets of convenient size for each separate material with sufficient number of buckets such that all the materials for an individual batch can be obtained for a single batch at one time. The amount of material required in each bucket shall be determined by weight using a scale meeting the requirements of AASHTO Designation: R39. Once the amount of material has been determined for each bucket, each bucket may be marked to indicate much of an individual material to add to the bucket for additional batches. Weighing of materials for each bucket may be discontinued for subsequent batches provided each bucket is approximately filled to the mark.

Mixing shall meet the requirements of AASHTO Designation: R39. All the aggregates, cementitious materials, and the required amount of water reducing admixture shall be added to the mixer. Particular attention shall be given to the incremental addition of water to ensure the desired slump is obtained for each batch.

907-510.02.3.2--Other Batching and Mixing. Concrete mixture not batched and mixed at the job site shall be batched, mixed, and transported in according with the requirements of Subsection 804.02.11.

907-510.02.4--Sampling & Testing. Sampling and testing of plastic concrete will be performed by the Contractor's Construction Quality Control having the applicable certifications in Table 2 in Section 804 and in accordance with the applicable test methods listed in Table 1 in Section 804 at the following sampling and testing frequency.

The slump, temperature, and total air content will be determined on the first batch each production day and other subsequent batches until requirements for these plastic properties are met. Slump, temperature, and total air content shall be determined at a minimum frequency of once per each 300 square feet of

concrete repair, or fraction thereof, but more often if the slump, temperature, or total air content are in question on subsequent batches. Once a batch has been determined to meet the requirements for slump, temperature, and total air content, additional testing on the batch is not required.

At least two concrete test cylinders for acceptance will be cast per day per section of lane for which an individual lane closure is affected and concrete is replaced. The slump, temperature, and total air content will be determined for the concrete test cylinders. The concrete test cylinders will be made from approximately the last batch of concrete produced each day.

Compressive strength cylinders for opening to traffic shall be cast and tested by the Contractor in accordance with Subsection 907-510.03.6.

907-510.02.5--Basis of Acceptance. The slump of plastic concrete mixture shall meet the requirements of Subsection 907-510.02.2 with the minus slump limits of AASHTO Designation: M157.

Sampling shall meet the requirements of AASHTO Designation: T141. For additional information concerning sampling concrete, see the Department's *Concrete Field Manual*.

The total air content of the plastic concrete mixture shall meet the requirements of Subsection 907-510.02.2.

The maximum plastic concrete acceptance temperature shall be 90°F. Plastic concrete with a temperature exceeding 90°F shall be rejected and not used in Department work. The minimum acceptance temperature shall meet the requirements of Subsection 804.02.16.1 for Cold Weather Concreting.

A check test shall be made on another portion of the obtained sample before rejection of any batch.

The compressive strength shall meet the requirements of Subsection 907-510.02.2.

907-510.03--Construction Requirements.

907-510.03.1--Surface Preparation. All spall areas one inch in diameter or larger shall be cleaned and prepared for receiving the concrete. The Contractor shall remove all loose, cracked or deteriorated concrete from the spalled areas as directed by the Construction Quality Control Manager using a mason or shop hammer and if necessary, a jack hammer not larger than 40 pounds.

With the approval of the Construction Quality Control Manager, the Contractor may use a concrete saw conforming to the requirements of Subsection 501.03.6.1 and/or a cold milling machine.

Hydrodemolition shall be used when called for on the Plans and as given in the Specification.

If the deteriorated concrete reaches a depth at or, as determined by the Construction Quality Control Manager, just above reinforcing steel, the concrete shall be removed to a depth such that at least the top half of the reinforcing steel is fully exposed in the spall area. Care shall be taken not to damage the reinforcing steel during removal of concrete. Any damage to the reinforcing steel as a result of the Contractor's operations shall be corrected to the satisfaction of the Construction Quality Control Manager at no additional cost to the Department.

For concrete pavements, if it is determined by the Construction Quality Control Manager that the depth of the deteriorated concrete is greater than one-half the slab thickness, the concrete shall be repaired using

the requirements of Section 503.

907-510.03.2--Joint Preparation for Pavements. Spall areas through which there is a joint or full-depth crack shall have the joint or full-depth crack maintained by a compressible insert form, such as Styrofoam, fiber board meeting the requirements of Subsection 707.02.4, or corrugated cardboard. The compressible insert form shall prevent bonding between the adjacent slabs in the spall area.

The compressible insert form shall be capable of maintaining the general line of the joint or full-depth crack during placement of concrete mixture. The thickness of the compressible insert form shall be the width of the existing joint or full-depth crack. The length and height of the compressible insert form shall extend beyond both sides of the repair area at least three (3) inches and into the joint or full-depth crack at least one (1) inch.

At no time shall the concrete mixture be permitted to flow into or across the joint or full-depth crack.

907-510.03.3-- Placing of Concrete. The repair shall begin as soon as practical following the removal concrete and cleaning of the spalled area. Any additional repairs shall be performed prior to or concurrent with the placement of the concrete mixture.

During placement, the concrete shall be thoroughly consolidated by internal vibration through the use of a spud-type vibrator or, if allowed by the Construction Quality Control Manager, externally through the use of a vibrating screed. The concrete shall be screeded longitudinally unless otherwise permitted by the Construction Quality Control Manager. The screed shall be metal of a type normally used on bridge deck placements. Finishing may be performed by either machine or hand methods. The repaired area shall be checked longitudinally and transversely in order to meet a 1/8 inch in 10 feet smoothness requirement unless it will be ground or milled to obtain the final grade.

After the screeding and floating has been completed and while the concrete is still plastic, the surface of the concrete shall be tested with a 10-foot straightedge. For this purpose the Contractor shall furnish and use an accurate 10-foot straightedge swung from handles three feet longer than one-half the width of the slab. The straightedge shall be held in contact with the surface in successive positions parallel to the road centerline and the whole area gone over from one side of the slab to the other as necessary. Advance along the road shall be in successive stages of not more than one-half the length of the straightedge. All depressions found shall be immediately filled with freshly mixed concrete, struck off, consolidated, and refinished. High areas shall be cut down and refinished. Special attention shall be given to assure that the surface across joints meets any requirements for smoothness. Straightedge testing and surface corrections shall continue until the entire surface is found to be free from observable departures from the straightedge, and the surface conforms to the required grade and cross section.

After the concrete mixture has been placed, an additional amount of the grout from the concrete mixture shall be used to fill and repair any “saw cut run-outs” where a saw cut extends past the repaired spall area.

907-510.03.4--Application of Liquid Membrane. Within 10 minutes of finishing the concrete mixture in each repaired spall area, the Contractor shall apply a coating of liquid membrane compound in accordance with Subsection 713.01.2 to the entire surface of the repaired spall area. The minimum rate of application of the liquid membrane shall be no less than the minimum recommended by the liquid membrane producer and no less than one gallon per 200 square feet of concrete surface.

As a rule of thumb, the color of a pavement covered with the required amount of curing compound should be indistinguishable from a sheet of commercially available standard “letter” size white copier paper

placed on top of it when viewed from a distance of about five (5) feet away horizontally if standing on the same grade as the pavement.

907-510.03.5--Sealing Joints. Previously existing joints shall be resealed. Sealing shall be in accordance with the requirements of Subsection 510.03.22 and its subsequent paragraphs.

907-510.03.6--Opening to Traffic. Upon approval of the Construction Quality Control Manager, the traffic lane shall be opened within 72 hours and may be opened when a 2500 psi compressive strength is obtained as verified by cylinder break. Eight test cylinders for verifying strength requirements shall be made and cured under the same conditions as the placement. Two test cylinders shall be tested and the results averaged to represent a test break. Traffic shall not be allowed on the repaired concrete until the required 2500 psi strength is attained. The area shall be cleared of equipment and waste materials prior to opening to traffic.

Delete Subsection 510.04 and 510.05 on page 338 and substitute the following:

907-510.04—Blank.

907-510.05—Blank.

MISSISSIPPI DEPARTMENT OF TRANSPORTATION

SPECIAL PROVISION NO. 907-601 DB **CODE: (SP)**

DATE: 03/10/2009

SUBJECT: Structural Concrete

Division 600, Incidental Construction, of the 2004 Edition of the Mississippi Standard Specifications for Road and Bridge Construction is hereby amended as follows:

After the heading **DIVISION 600 - INCIDENTAL CONSTRUCTION**, add the following:

Unless otherwise specified, all testing of Portland cement concrete in Division 600 shall be in accordance with the requirements of Subsection 907-601.02.1.

907-601.02--Materials.

907-601.02.1--General. Delete the second and third sentence of the first paragraph of Subsection 601.02.1 on page 348, and substitute the following:

Sampling and testing will be in accordance with TMD-20-04-00-000 or TMD-20-05-00-000, as applicable.

907-601.03.6.3--Removal of Falsework, Forms, and Housing. Delete the first paragraph, the table and second paragraph of Subsection 601.03.6.3 on pages 349 and 350, and substitute the following:

The removal of falsework, forms, and the discontinuance of heating, shall be in accordance with the provisions and requirements of Subsection 907-804.03.15, except that the concrete shall conform to the following compressive strength requirements:

Wingwall and Wall Forms not Under Stress	1000 psi
Wall Forms under Stress	2200 psi
Backfill and Cover clear	2400 psi

In lieu of using concrete strength cylinders to determine when falsework, forms, and housings can be removed, an approved maturity meter may be used to determine concrete strengths by inserting probes into concrete placed in a structure. The minimum number of maturity meter probes required for each structural component shall be in accordance with Subsection 907-804.03.15. Procedures for using the maturity meter and developing the strength/maturity relationship shall follow the requirements of Subsection 907-804.03.15. Technicians using the maturity meter or calculating strength/maturity graphs shall meet the requirements of Subsection 907-804.03.15.

Delete Subsections 601.04 and 601.05 on pages 351 and 352 and substitute the following:

907-601.04--Blank.

907-601.05--Blank.

MISSISSIPPI DEPARTMENT OF TRANSPORTATION

SPECIAL PROVISION NO. 907-605 DB **CODE: (SP)**

DATE: 03/10/2009

SUBJECT: Underdrains

Section 605, Underdrains, of the 2004 Edition of the Mississippi Standard Specifications for Road and Bridge Construction is hereby amended as follows:

907-605.03--Construction Requirements.

907-605.03.5--Edge Drain Installation. Delete the seventh paragraph of Subsection 605.03.5 on page 376 and substitute the following:

When corrugated polyethylene drainage tubing is used, joints shall be made with snap-on or split couplings, corrugated to engage the pipe corrugations, and shall engage a minimum of four (4) corrugations, two (2) on each side of the pipe joint.

Delete Subsections 605.04 and 605.05 beginning on page 377 and substitute the following:

907-605.04--Blank.

907-605.05--Blank.

MISSISSIPPI DEPARTMENT OF TRANSPORTATION

SPECIAL PROVISION NO. 907-619 DB **CODE: (SP)**

DATE: 03/09/2009

SUBJECT: Changeable Message Signs

Section 619, Traffic Control for Construction Zones, of the 2004 Edition of the Mississippi Standard Specifications for Road and Bridge Construction is hereby amended as follows:

907-619.02--Material Requirements. After Subsection 619.02.13 on page 424, add the following.

907-619.02.14--Changeable Message Sign. This work shall consist of furnishing, testing, and maintaining a trailer-mounted electronic Portable Changeable Message Sign (PCMS) assembly. The sign display shall be a LED, full matrix sign. If more than one portable changeable message sign is required for this project, they shall all be of the same model and from the same manufacturer. All parts and materials used to construct the portable changeable message signs shall be interchangeable.

The PCMS shall be a trailer-mounted, solar powered, portable changeable message sign.

Each PCMS shall include the following main components:

a) Sign Housing
b) LED Modules
c) LED Drivers
d) Battery Bank
e) Sign Controller
f) Trailer
g) AC Charger
h) Solar Panel
i) Solar Panel Charger

The LED display shall be full matrix sign with a minimum of 28-pixel rows x 50-pixel columns. The pixel spacing shall be such that three (3) lines of text (5 columns x 7 rows, 8 characters) shall each have a nominal height of 18 inches.

The PCMS shall include a remote communications interface as specified herein. The PCMS shall be provided with a local serial and USB connection within the sign control cabinet so that a laptop computer using the remote software can communicate directly with the sign CPU.

This Special Provision incorporates normative references to other standards as outlined in Section 1 of the NEMA TS-4 standard and as listed below.

NEMA TS4-2004, Hardware Standards for Dynamic Message Signs (DMS) with NTCIP Requirements. All NEMA TS-4 requirements that are applicable to portable signs shall be used.

NTCIP Standards.

If a conflict between the standards referenced and this Special Provision, this Special Provision shall govern.

The definitions of the terms used within this Special Provision are as defined in Section 1 of the NEMA TS-4 standard.

If required in the contract, the PCMS shall include a speed radar unit as specified herein.

907-619.02.14.1--Mechanical Construction. Each PCMS shall meet the following minimum requirements.

Weather-Tight Enclosure. The entire sign and trailer assembly, including each component / equipment exposed to weather, shall be fully protected. It shall withstand the effects of sand, dirt, dust, moisture, hose-directed water, ice, snow and UV radiation (UVA and UVB). It shall withstand the effects of high wind loading and blowing rain as specified herein with all outriggers and/or leveling jacks in place. The sign and all components shall be watertight. Space shall be provided for manuals to be stored in a weatherproof environment.

Wind Loading. Wind loading requirements for the portable sign housing and trailer assembly shall be as specified in Section 3.3.2.1.2 of the NEMA TS-4 standard.

Welding. All welding on all major structural components (aluminum or steel) shall be performed by certified welders and in accordance to SAE/AWS D8.8 American Welding Society.

Protective Coatings. Protective coatings or processes, such as anodizing, e-coating, powder coat painting, plating, etc., shall be incorporated to protect all sign, cabinet, and trailer metal surfaces from corrosion. Any non-protected metallic fasteners shall be made of stainless steel or aluminum. All components shall be similar material, or be isolated to reduce galvanic reactions.

Temperature and Humidity. Each PCMS shall be designed to operate continuously in extreme ambient temperature ranges and at high humidity levels.

Operating ambient temperature range of the portable sign and trailer assembly shall be -29°F to +165°F. Storage temperature range shall be from -40°F to +185°F. The portable sign shall be capable of continued operation within the operating temperature ranges specified without the need for active systems (i.e., fans). Operating relative humidity level of the portable sign shall be up to 95% non-condensing.

Sign Face. Sign face material shall be protected by a non-glaring polycarbonate material of at least ¼-inch thickness. It shall be replaceable and manufactured of material rated for outside use and resistant to UV degradation (exposure to the sun).

All electronics and pixels shall be protected from damage due to moisture.

Sign Housing Construction. The portable sign housing, including its front face panels, shall be designed to conform to the requirements of minimum NEMA Type 3R, as described in the latest edition of NEMA 250.

It shall be comply with latest structural AASHTO requirements.

It shall be constructed of aluminum sheeting which shall not be less than 1/8-inch thick with all seams continuously welded by the inert gas process.

The front of the sign housing shall have a flat black matte finish.

Weep holes shall be provided in the housing to allow moisture from condensation to escape.

The sign housing and cabinets shall be designed to keep insects out.

The sign housing shall be constructed in such a manner as to prohibit stray light from reducing legibility.

All sides of the sign housing shall have a maintenance-free finish.

Alignment of the sign housing shall be capable of being horizontally adjusted to position the sign a full 360 degrees. It shall be capable of rotating and locking at any selected horizontal angle up to 360 degrees. A sight alignment tube/device shall be mounted to horizontally position the sign display. A positive brake assembly with lockable control arm shall be provided to position the sign display in the desired position.

It shall allow easy access to all components contained within the display housing without the removal of any external parts. Door locks shall be rigidly mounted. Gasketing shall be provided on all door openings and shall be dust-tight, permanently bonded to the door metal, and shall not stick to the mating metal surface. A gasket channel shall be provided to support the gasket on the door.

Trailer. Each PCMS trailer shall meet all requirements for trailers as outlined in Section 3.3.3 of the latest NEMA TS-4 standard as well as the following minimum requirements.

All trailers shall meet the requirements of FMVSS, Part 571 and SAE J684 for transport safety including, but not limited to the use of brakes, safety chains, coupling device, and lights. PCMS manufacturer shall provide instructions stating procedures necessary to insure safe transport.

The structural frame shall be capable of supporting the gross vehicle weight (GVW) load of the trailer corresponding to the axle and tire ratings that shall be in accordance with FMVSS, Part 571.

The tires shall be radial ST “Special Trailer” rated. The wheels shall be 15-inch steel wheels with five lug bolts per wheel. Each trailer wheel shall be equipped with one locking lug nut. A minimum of four keys for the locking lug nuts shall be supplied for each trailer.

The trailer shall be provided with a minimum of four outriggers or leveling jacks. One outrigger or leveling jack shall be mounted near each corner of the trailer. The length of the leveling jacks shall be such that when the trailer is level, all four jacks and the tongue jack can be lowered into the vertical position. The jacks shall be screw type jacks with a minimum 25-inch lift. Each jack shall include a swivel mechanism that allows the jacks to be swing up to a horizontal position for towing. The swivel mechanism shall secure the jack in both vertical and horizontal positions through a lock pin.

The trailer shall also be provided with a trailer stand mounted on the tongue of the trailer. The stand shall be corrosion resistant. It shall include a 6-inch wheel that allows horizontal positioning of the trailer. The stand shall be welded, not bolted, to the tongue of the trailer.

The trailer shall be provided with legal tail/brake lights, signals, and license plate mounting bracket. The trailer shall be supplied with an electrical harness assembly for connection to the tow vehicle and shall be terminated in a connector type to be specified by the Engineer.

The trailer shall be provided with a 2-inch "hammer blow coupler" style hitch in accordance with SAE J684 and interchangeable with a 2½-inch Pintle coupler / ring meeting SAE J847.

The trailer spring leafs shall be rated at a minimum of 3500 pounds.

The trailer shall be equipped with a sign display lift and control console. The lift shall be electric, hydraulic lift, or combination of both with manual backup lift. The lift shall be capable of lifting the display a minimum of seven feet (7') above the roadway surface. A mast safety pin shall be provided to prevent the sign display from falling in the event of an electric or hydraulic system failure.

The trailer shall have a minimum of 6,000-pound capacity hydraulic surge brake system along with a breakaway latch.

Illumination shall be provided as an integral part of the sign or trailer assembly to change the sign controller data in darkness.

The trailer shall contain batteries and photovoltaic (solar) panels as specified herein.

Photovoltaic (Solar) Panel System. Each PCMS shall include solar panels. A solar bank shall be assembled using multiple solar panels. All photovoltaic panels shall be listed in accordance with UL 1703, or equivalent. The solar cell bank shall have a minimum capacity of 240 watts. The solar cell bank shall be mounted on a frame capable of being tilted at a minimum of one direction up to 61 degrees with zero degrees being horizontal. Solar cells shall be laminated between ethylene vinyl acetate and tempered glass. The solar panel shall incorporate an extruded aluminum frame. The solar battery charge controller shall include the following three state charger modes.

- Bulk
- Absorption
- Float

Battery Requirements. Each PCMS shall include batteries for primary energy storage on trailers. The battery bank capacity shall be a minimum of 900 amp/hours at 12VDC at 20-hour rate of discharge. The batteries shall be heavy duty deep cycle type rated for 80% discharge. A battery power disconnect shall be provided.

Battery enclosures shall be vented to prevent the accumulation of explosive gases. The battery cabinets must be lockable with a standard padlock.

AC Charging System. Each PCMS shall have an AC battery charging sub-system. The system shall be UL listed and operate from a standard 120VAC generator meeting all NEC requirements for portable equipment.

The solar battery charger shall include the following three state charger modes.

- Bulk
- Absorption

- Float

The AC battery charger shall have sufficient capacity to charge the battery bank from 80% discharged to fully charge in 24-hours, and operate the sign simultaneously. The AC battery charger shall be equipped with a male plug-in and a 50-foot long extension cord constructed of a minimum 12-guage wire for this purpose.

907-619.02.14.2--Controller to Sign Interface. Each PCMS shall meet all applicable controller to sign interface requirements as outline in Section 4 of the NEMA TS-4 standard.

907-619.02.14.3--Display Properties. Each PCMS shall have a cone of vision (viewing angle) from the center (reference axis) shall be a minimum 15 degrees with the half-power viewing angle defined such that at a given distance from the LED, luminous intensity measured at any point at an angle of 7.5 degrees from the LED's center axis is no less than half the luminous intensity measured directly on the LED's center axis.

The minimum word legibility requirements shall be 1232 feet or greater under daytime light conditions and within the cone of visions as specified. Legibility is defined as the ability to discern the content of a display using a "word message". The minimum word legibility requirement shall be documented either by a MDOT approved independent testing laboratory or by participation in the NTPEP test program.

The minimum visibility requirements shall be 3000 feet or greater under daytime light conditions and within the cone of vision as specified. Visibility is defined as the ability to recognize that a display exists. The minimum visibility requirement shall be documented either by a MDOT approved independent testing laboratory or by participation in the NTPEP test program.

The PCMS shall be capable of displaying standard fonts and font alphabets as specified in Sections 5.6.1 and 5.6.2.3 of the NEMA TS-4 standard and adhere to NTCIP 1203. The PCMS shall also support moving arrows.

Any NTPEP test results shall be for the PCMS model being used and shall be within the last three completed test cycles.

907-619.02.14.4--Optical Components. The pixels for the PCMS shall be manufactured using Light Emitting Diodes (LED). Changes to displays shall be performed by turning the LEDs in a pixel either on or off. The discrete, LED shall be an untinted, non-diffused, solid-state lamp that uses Aluminum Indium Gallium Phosphide (AlInGap) technology manufactured by Avago Technologies (formerly Agilent Technologies), Toshiba Corporation, Nichia Corporation, or functional equivalent. Horizontal and vertical spacing between modules shall be such that the horizontal and vertical pitch between all pixels is equal. A failure of one pixel shall not effect the operation of any other pixel.

All LEDs used to create a display in a single portable sign shall have a nominally rated LED life of 100,000 hours of operation under field conditions. This shall include a operating temperatures between -29°F to +165°F. LED life shall be defined as the time it takes for the LED light output to degrade to half of the LED's initial light output. Current through an LED shall be limited to the manufacturer's recommendation under any conditions. Each LED character module shall be rated for use over the environmental range specified herein, including heat absorption due to sunlight. The LEDs shall be protected from the outside environmental conditions, including moisture, snow, ice, wind, dust, dirt, and UV rays (UVA and UVB). All LEDs shall be mounted so that they present a uniform and legible display.

Pixels shall be replaceable in modular groupings (modules). All modules within a sign shall be the same size and interchangeable. The replacement of any module shall be possible with no more that simple non-vendor-specific hand tools, such as screw drivers or wrenches, without any physical modification to the module.

907-619.02.14.5--PCMS Controller and Storage Cabinets. All PCMS controller and storage cabinets shall be minimum NEMA 3R rated and be completely encased and lockable with a standard padlock as specified herein. A separate lockable storage cabinet shall be provided to house various accessories. The controller cabinet shall be manufactured to withstand all types of adverse weather conditions and shall be designed and installed to keep insects out. All components inside the controller cabinet shall be accessible without disconnecting any unassociated wires or components. The controller cabinet shall be illumination. The keyboard terminal and control panel shall be housed. Lighted keys and terminal displays are acceptable.

All controls in the controller cabinet shall be labeled. The cabinet shall have a voltmeter gauge to indicate the current battery charge status. It shall have an amp gauge to indicate the current/charging status. It will be acceptable to have a display via digital readout on a control console or panel.

907-619.02.14.6--Electronics and Electrical. Each PCMS shall meet all applicable electronics and electrical requirements as outline in Section 8 of the NEMA TS-4 standard.

Sign Controller. The PCMS shall include a local sign controller with firmware. The local control interface shall have a keyboard capable of allowing full programming and control of the PCMS locally. It shall have a separate serial RS-232 or USB connection to allow a laptop computer using the remote control software to communicate directly with the sign controller.

Local and remote interfaces shall be password protected to safeguard against unauthorized use.

It shall perform and report the following minimum sign diagnostics both through the local interface and Remote Control Subsystem.

- LED brightness controls
- Sign status
- Communications status
- Battery voltage
- Photocell ambient light level.

It shall automatically report a low battery alarm to a remote user through the Remote Control Subsystem. It shall have an alarm for the controller door open and over temperature.

It shall store and display both textual and graphical symbols. It shall store a minimum of 20 pre-programmed messages and graphics. It shall display preprogrammed (by manufacturer) Manual on Uniform Traffic Control Devices (MUTCD) symbolic messages and standard arrows. It shall schedule predetermined sequences of messages based on a programmed time and date. Each sequence shall display up to four (4) programmed messages (text and/or graphics). It shall display conventional one, two, or three-line messages for display with a choice of a minimum of three font sizes. Character width shall be proportional to the letter type. The one line message font size shall be capable of displaying messages in full size to utilize the maximum area of display.

It shall allow for automatic and manual controls to adjust the brightness of the LEDs. Automatic control shall be capable of varying the LED brightness by sensing the ambient light level using photocells. Manual brightness control shall be password protected to safeguard against unauthorized use.

It shall display a preprogrammed default message or no message at all, after a power recovery from a power failure. The sign shall shut down its LED display if internal cabinet temperatures reach a level that is determined unsafe by the manufacturer.

All communications and power cabling shall be either shielded or routed within conduit to minimize potential EMI/RFI effects.

Remote Control Subsystem. The PCMS shall be supplied with all the hardware and software necessary to control the PCMS from a remote central station.

It shall have a cellular phone and/or modem capable of communication using a MDOT provided cellular service provider. The Contractor shall coordinate with MDOT for cellular service provider. The Contractor shall be responsible for establishing cellular service and providing activated phone number(s) as directed and approved by the MDOT. The Contractor shall pay for cellular service for this project until the Final Maintenance Release as documented by the State Construction Engineer at which time it will be turned over to MDOT.

The cellular service type shall be CDMA/1xRTT or GSM/GPRS, as directed by MDOT.

It shall be capable of supporting connection and remote control, programming and diagnostics via the Internet.

The subsystem shall have all necessary hardware such as external antenna, communications cables, and controller interface and NTCIP Sign controller software. The central station software meeting the following minimum requirements:

- Windows XP compatible
- Capable of running on any desktop or laptop.
- Capable of controlling all PCMS functions through windows and GUIs (Graphical User Interface)
- NTCIP compatible as specified herein.

Communications. In addition to any protocols that may be available from the PCMS Manufacturer, each sign controller shall support NTCIP as follows.

- NTCIP Protocol and Command Sets**.** This specification references several standards through their NTCIP designated names and numbers. Each NTCIP Component covered by these project specifications shall implement the most recent version of the standard that is available as of project advertisement date, including any and all prepared Amendments to these standards as of the same date.

  Profile Implementation Conformance Specifications (PICS) for each NTCIP standard required shall be submitted for review and approval to the Department.

- RS-232 Interface. Communication interfaces using RS-232 shall conform, with the following minimum requirements.

1101 – NTCIP Simple Transportation Management Framework (STMF)
1203 - NTCIP Object Definition for Portable Dynamic Message Signs
2301 - NTCIP AP-STMF
2201 - NTCIP TP-Transportation Transport Profile
2103 – NTCIP SPPPP/RS232
2104 - NTCIP SP-PMPP/RS232

- Subnet Level**.** For each communication interface, the NTCIP Components may support additional Subnet Profiles at the manufacturer's option. At any time, only one Subnet Profile shall be active on a given communication interface. The NTCIP Component shall be configurable to allow the field technician to activate the desired Subnet Profile.

- Transport Level. For each communication interface, the communication interface may support additional Transport Profiles at the manufacturer's option. Response data-grams shall use the same Transport Profile used in the request. Each communication interface shall support the receipt of data-grams conforming to any of the identified Transport Profiles at any time.

- Application Level. For each communication interface, all interfaces shall comply with NTCIP 1101 and shall meet the requirements for Conformance Level 1 (NOTE -See Amendment to standard). Optionally, the NTCIP Component may support SNMP traps. A communication interface may support additional Application Profiles at the manufacturer's option. Responses shall use the same Application Profile used by the request. Each communication interface shall support the receipt of Application data packets at any time allowed by the subject standards.

Information Level. For all communication interfaces, the information level protocol shall provide Full, Standardized Object Range Support of all objects required by these procurement specifications unless otherwise indicated below. The maximum Response Time for any object or group of objects shall be 200 milliseconds. All communication interfaces shall implement all mandatory objects of all mandatory Conformance Groups as defined in NTCIP 1203 and their respective Amendments. Table 1 indicates the modified object requirements for these mandatory objects. Table 2 shows the required minimum support of messages that are to be stored in permanent memory. The sign shall blank if a command to display a message contains an invalid Message CRC value for the desired message. Table 3 specifies the support of the required MULTI tags and their ranges.

It shall also implement all mandatory objects of the following optional conformance groups of NTCIP 1201.

- Time Management Conformal Group
- Report Conformal Group. Table 4 indicates the modified object requirements.
- Implement all objects of the Font Configuration Conformance Group, as defined in NTCIP 1203. Table 5 indicates the modified object requirements for this conformance group.
- Implement all objects of the PCMS Configuration Conformance Group, as defined in NTCIP 1203.
- Implement all objects of the Multi Configuration Conformance Group, as defined in NTCIP 1203. Table 6 indicates the modified object requirements for this conformance group.
- Implement all objects of the Multi Error Configuration, as defined in NTCIP 1203.
- Implement all objects of the Illumination/Brightness.
- Sign Status, as defined in NTCIP 1203.
- Status Error, as defined in NTCIP 1203.

- Pixel Error Status, as defined in NTCIP 1203.
- The sign display shall be capable of displaying preprogrammed Manual on Uniform Traffic Control Devices (MUTCD) symbolic messages and standard arrows Since the display of graphics is currently not defined within the NTCIP Standards or their amendments, the vendor shall propose, and provide detailed documentation (i.e., interface protocol description level), how the specified graphical shapes can be displayed.
- Implement the optional objects listed in Table 7.

Table 1
Modified Object Ranges for Mandatory Objects

Object	Reference	Project Requirement
ModuleTableEntry	NTCIP 1201 Clause 2.2.3	Shall contain at least one row with moduleType equal to 3 (software). The moduleMake shall specify the name of the manufacturer, the moduleModel shall specify the manufacturer's name of the component and the modelVersion shall indicate the model version number of the component.
MaxGroupAddresses	NTCIP 1201 Clause 2.7.1	Shall be at least 1
CommunityNamesMax	NTCIP 1201 Clause 2.8.2	Shall be at least 3
PCMSNumPermanentMsg	NTCIP 1203 Clause 2.6.1.1.1.1	Shall be at least 20*
PCMSMaxChangeableMsg	NTCIP 1203 Clause 2.6.1.1.1.3	Shall be at least 50. Each message shall support at least 4 pages per message.
PCMSFreeChangeableMemory	NTCIP 1203 Clause 2.6.1.1.1.4	Shall be at least 70 when no messages are stored.
PCMSMessageMultiString	NTCIP 1203 Clause 2.6.1.1.1.8.3	The PCMS shall support any valid MULTI string containing any subset of those MULTI tags listed in Table 4.
PCMSControlMode	NTCIP 1203 Clause 2.7.1.1.1.1	Shall support at least the following modes: ▪ local ▪ external ▪ central ▪ centralOverride

Table 2
Content of Permanent Messages

Perm. Msg. Num.	Section 12 Description
1	Permanent Message #1 shall blank the display (i.e., command the sign to use PCMSMessageType 7). It shall have a run-time priority of 50.

Table 3
Required MULTI Tags

Code	Feature
f1	Field 1 - time (12hr)
f2	Field 2 - time (24hr)
f8	Field 8 - day of month
f9	Field 9 – month
f10	Field 10 - 2 digit year
f11	Field 11 - 4 digit year
Fl (and /fl)	flashing text on a line by line basis with flash rates controllable in 0.5 second increments.
Fo	Font
J12	justification - line – left
J13	justification - line – center
J14	justification - line – right
J15	justification - line – full
Jp2	justification - page – top
Jp3	justification - page - middle
Jp4	justification - page - bottom
Nl	New line
Np	New page, up to 2 instances in a message (i.e., up to 4 pages/frames in a message counting first page)
Pt	page times controllable in 0.5 second increments.

Table 4
Modified Object Ranges for the Report Conformance Group

Object	Reference	Project Requirement
maxEventLogConfigs	NTCIP 1201 Clause 2.5.1	Shall be at least 50
eventConfigurationMode	NTCIP 1201 Clause 2.4.3.1	The NTCIP Component shall support the following Event Configuration Modes: ▪ onChange ▪ greaterThanValue ▪ smallerThanValue
maxEventLogSize	NTCIP 1201 Clause 2.5.3	Shall be at least 200
maxEventClasses	NTCIP 1201 Clause 2.5.5	Shall be at least 16

Table 5
Modified Object Ranges for the Font Configuration Conformance Group

Object	Reference	Project Requirement
numfont	NTCIP 1203 Clause 2.4.1.1.1.1	Shall be at least 3*
maxFontCharacters	NTCIP 1203 Clause 2.4.1.1.1.3	Shall be at least 127**

* Upon delivery, the first font shall be a standard 18-inch font. The second font shall be a double-stroke 18-inch font. The third font shall be a 28-inch font.

** Upon delivery, the first three font sets shall be configured in accordance with the ASCII character set for the following characters:

"A" thru "Z" - All upper case letters.
"a" thru "z" - All lower case letters.
"0" thru "9" - All decimal digits.
Space (i.e., ASCII code 0x20).
Punctuation marks shown in brackets [. , ! ? - ‘ ’ “ ” / ( )]
Special characters shown in brackets [# & * + < >]

Table 6
Modified Object Ranges for the MULTI Configuration Conformance Group

Object	Reference	Project Requirement
defaultBackgroundColor	NTCIP 1203 Clause 2.5.1.1.1.1	The PCMS shall support the following background colors: ▪ black
defaultForegroundColor	NTCIP 1203 Clause 2.5.1.1.1.2	The PCMS shall support the following foreground colors: ▪ amber ▪ orange
defaultJustificationLine	NTCIP 1203 Clause 2.5.1.1.1.6	The PCMS shall support the following line justification: ▪ Left ▪ Center ▪ Right ▪ Full
defaultJustificationPage	NTCIP 1203 Clause 2.5.1.1.1.7	The PCMS shall support the following forms of page justification: ▪ Top ▪ Middle ▪ Bottom
defaultPageOnTime	NTCIP 1203 Clause 2.5.1.1.1.8	The PCMS shall support the full range of these objects with step sizes no larger than 0.5 seconds
defaultPageOffTime	NTCIP 1203 Clause 2.5.1.1.1.9	The PCMS shall support the full range of these objects with step sizes no larger than 0.5 seconds
defaultCharacterSet	NTCIP 1203 Clause 2.5.1.1.1.10	The PCMS shall support the following character sets: ▪ eightBit

Table 7
Optional Object Requirements

Object	Reference	Project Requirement
globalSetIDParameter	NTCIP 1201 Clause 2.2.1	
eventConfigLogOID	NTCIP 1201 Clause 2.5.2.7	
eventConfigAction	NTCIP 1201 Clause 2.5.2.8	
eventClassDescription	NTCIP 1201 Clause 2.5.6.4	
defaultFlashOn	NTCIP 1203 Clause 2.5.1.1.1.3	The PCMS shall support the full range of these objects with step sizes no larger than 0.5 seconds
defaultFlashOff	NTCIP 1203 Clause 2.5.1.1.1.4	The PCMS shall support the full range of these objects with step sizes no larger than 0.5 seconds
PCMSSWReset	NTCIP 1203 Clause 2.7.1.1.1.2	
PCMSMessageTimeRemaining	NTCIP 1203 Clause 2.7.1.1.1.4	
PCMSShortPowerRecoveryMessage	NTCIP 1203 Clause 2.7.1.1.1.8	
PCMSLongPowerRecoveryMessage	NTCIP 1203 Clause 2.7.1.1.1.9	
PCMSShortPowerLossTime	NTCIP 1203 Clause 2.7.1.1.1.10	
PCMSResetMessage	NTCIP 1203 Clause 2.7.1.1.1.11	
PCMSCommunicationsLossMessage	NTCIP 1203 Clause 2.7.1.1.1.12	
PCMSTimeCommLoss	NTCIP 1203 Clause 2.7.1.1.1.13	
PCMSEndDurationMessage	NTCIP 1203 Clause 2.7.1.1.1.15	
PCMSMemoryMgmt	NTCIP 1203 Clause 2.7.1.1.1.16	The PCMS shall support the following Memory

		management Modes: ▪ normal ▪ clearChangeableMessage ▪ clearVolatileMessages
PCMSMultiOtherErrorDescription	NTCIP 1203 Clause 2.7.1.1.1.20	If the vendor implements any vendor-specific MULTI tags, the PCMS shall be provided with documentation that includes meaningful error messages within this object whenever one of these tags generates an error.
PCMSIllumLightOutputStatus	NTCIP 1203 Clause 2.8.1.1.1.9	
watchdogFailureCount	NTCIP 1203 Clause 2.11.1.1.1.5	
PCMSStatDoorOpen	NTCIP 1203 Clause 2.11.1.1.1.6	
fanFailure	NTCIP 1203 Clause 2.11.2.1.1.8	
fanTestActivation	NTCIP 1203 Clause 2.11.2.1.1.9	
tempMinCtrlCabinet	NTCIP 1203 Clause 2.11.4.1.1.1	
tempMaxCtrlCabinet	NTCIP 1203 Clause 2.11.4.1.1.2	
tempMinSignHousing	NTCIP 1203 Clause 2.11.4.1.1.5	
tempMaxSignHousing	NTCIP 1203 Clause 2.11.4.1.1.6	

NTCIP Compliance Documentation. Software shall be supplied with full documentation, including a CD-ROM containing ASCII versions of the following Management Information Base (MIB) files in Abstract Syntax Notation 1 (ASN.1) format.

The relevant version of each official standard MIB Module referenced by the device functionality shall be included. If the device does not support the full range of any given object within a Standard MIB Module, a manufacturer specific version of the official Standard MIB Module with the supported range indicated in ASN.1 format in the SYNTAX and/or DESCRIPTION fields of the associated OBJECT TYPE macro shall be provided. The filename of this file shall be identical to the standard MIB Module, except that it will have the extension ".man".

A MIB Module in ASN.l format containing any and all manufacturer-specific objects supported by the device with accurate and meaningful DESCRIPTION fields and supported ranges indicated in the SYNTAX field of the OBJECT-TYPE macros shall be provided. This includes a MIB containing any other objects supported by the device.

Additionally, the manufacturer shall provide a test procedure that demonstrates how the NTCIP compliance of both, the data dictionaries (NTCIP 1201, 1203, and their amendments) and the communications protocols have been tested. The manufacturer shall allow the use of any and all of this documentation by any party authorized by the Procuring Agency for systems integration purposes at any time initially or in the future, regardless of what parties are involved in the systems integration effort.

907-619.02.14.7–Additional Equipment Requirements. When the contract requires the PCMS to include a speed radar unit, the radar shall operate in the "K" band, in an "approach only" mode. In conjunction with the radar, the sign shall be capable of displaying the vehicle speeds. The unit shall be programmable to allow the interruption of user-defined messages by the vehicle speed display and/or alternate messages whenever a settable speed threshold is exceeded. The radar unit shall be encased in an aluminum enclosure with a polycarbonate lens, and the metal portion shall receive the same protective coating, priming, and painting as the rest of the sign

907-619.02.14.8–System Documentation. For each PCMS, the Contractor shall provide two (2) user manuals. The user manual shall include description and samples for all operational functions, software required to operate the sign on site and remotely, all wiring diagrams, a parts lists, the sign specifications, warranty information, maintenance information and schedule, and a trouble shooting table

Each copy shall be bound and shall contain laminated sheets.

907-619.03--Construction Requirements. After Subsection 619.03.9 on page 427, add the following.

907-619.03.10--Changeable Message Sign. Each changeable message sign shall be installed and continuously operated at the location selected by the Engineer on State right-of-way. The Contractor is advised that selected locations may be outside the planned indicated limits of the project. The Contractor shall perform all work necessary for preparation of the site selected and approved by the Engineer, to insure maximum safety for and sign visibility of the traveling public; and may be required to remove any temporary work at a later date as directed by the Engineer. The Contractor will also place a minimum of two plastic drums in advance of the sign and one beside the sign as long as it is in use. The Contractor shall be required to move the sign to a new location if directed by the Engineer.

The Contractor may be permitted to bring electric power from outside the normal right-of-way for operation of the equipment if the Department determines that the installation operation will not be hazardous to the traveling public. The Contractor will be required to secure a permit from the Department prior to any work by the power company on the right-of-way. The entire cost of providing electrical service, power to operate the equipment, and removal of the power source from the right-of-way shall be borne by the Contractor.

The changeable message sign(s) will remain the property of the Contractor after the Engineer determines that there is no further need for the sign(s) on the project.

Delete Subsection 619.04 beginning on page 427 and substitute the following:

907-619.04--Blank.

Delete Subsection 619.05 beginning on page 428 and substitute the following:

907-619.05--Blank.

MISSISSIPPI DEPARTMENT OF TRANSPORTATION

SPECIAL PROVISION NO. 907-626 DB **CODE: (SP)**

DATE: 03/10/2009

SUBJECT: Double Drop Thermoplastic Markings

Section 626, Thermoplastic Traffic Markings, of the 2004 Edition of the Mississippi Standard Specifications for Road and Bridge Construction is hereby amended as follows:

907-626.03.1.1--Equipment. After the second paragraph of Subsection 626.03.1.1 on page 444, add the following:

When edge lines are placed over rumble strips, the equipment must be able to apply the markings using the atomization method instead of extrusion / ribbon method.

907-626.03.1.2--Construction Details. After the second sentence of the first full paragraph of Subsection 626.03.1.2 on page 445, add the following:

When edge lines are placed on rumble strips, the thickness of the edge line shall be 90 mils.

After the last sentence of the third full paragraph of Subsection 626.03.1.2 on page 445, add the following:

When double drop thermoplastic stripe is called for in the Contract, additional beads by the drop-on method shall be applied as follows:

1. Class A glass beads at a rate of not less than three (3) pounds of beads per 100 feet of six-inch (6”) stripe.

2. Class B glass beads at a rate of not less than three (3) pounds of beads per 100 feet of six-inch (6”) stripe.

3. The Class B glass beads shall be applied to the newly placed stripe first; followed by the application of the Class A glass beads.

Delete Subsections 626.04 and 626.05 on pages 445 and 446 and substitute the following:

907-626.04--Blank.

907-626.05--Blank.

MISSISSIPPI DEPARTMENT OF TRANSPORTATION

SPECIAL PROVISION NO. 907-701 DB **CODE: (SP)**

DATE: 03/10/2009

SUBJECT: Hydraulic Cement

Section 701, Hydraulic Cement, of the 2004 Edition of the Mississippi Standard Specifications for Road and Bridge Construction is hereby amended as follows:

Delete Subsection 701.01 on pages 595 & 596, and substitute the following:

907-701.01--General. The following requirements shall be applicable to hydraulic cement:

Only hydraulic cements conforming to Section 701 shall be used. Hydraulic cements shall not be listed or designated as meeting more than one (1) AASHTO or MDOT type.

Different brands of hydraulic cement, or the same brand of hydraulic cement from different mills, shall not be mixed or used alternately in any one (1) class of construction or structure, without written permission from the Engineer; except that this requirement will not be applicable to hydraulic cement treatment of design soils, or bases.

The Contractor shall provide suitable means for storing and protecting the hydraulic cement against dampness. Hydraulic cement, which for any reason, has become partially set or which contains lumps of caked hydraulic cement will be rejected. Hydraulic cement salvaged from discarded or used bags shall not be used.

The temperature of bulk hydraulic cement shall not be greater than 165°F at the time of incorporation in the mix.

Acceptance of hydraulic cement will be based on the certification program as described in MDOT's Materials Division Inspection, Testing, and Certification Manual and job control sampling and testing as established by MDOT SOP.

Retests of hydraulic cement may be made for soundness and expansion within 28 days of test failure and, if the hydraulic cement passes, it may be accepted. Hydraulic cement shall not be rejected due to failure to meet the fineness requirements if upon retests after drying at 212°F for one (1) hour, it meets such requirements.

Delete Subsection 701.02 on page 596, and substitute the following:

907-701.02--Portland Cement.

907-701.02.1--General.

907-701.02.1.1--Types of Portland Cement. Portland cement (cement) shall be either Type I or Type II conforming to AASHTO Designation: M85 or Type I (MS), as defined by the description below Table 1. Type III cement conforming to AASHTO Designation: M85 or Type III (MS), as defined by the

description below Table 1, may be used for the production of precast or precast-prestressed concrete members.

907-701.02.1.2--Alkali Content. All cement types in this Subsection shall meet the Equivalent alkali content requirement for low-alkali cements listed in AASHTO Designation: M85, Table 2.

907-701.02.2--Replacement by Other Cementitious Materials. The maximum replacement of cement by weight is 25% for fly ash or 50% for ground granulated blast furnace slag (GGBFS). The minimum tolerance for replacement shall be 5% below the maximum replacement content. Replacement contents below this minimum tolerance by fly ash or GGBFS may be used, but shall not be given any special considerations, like the maximum acceptance temperature for Portland cement concrete containing pozzolans. Special considerations shall only apply for replacement of cement by fly ash or GGBFS.

907-701.02.2.1--Portland Cement Concrete Exposed to Soluble Sulfate Conditions or Seawater. When Portland cement concrete is exposed to moderate or severe soluble sulfate conditions, or to seawater, cement types and replacement of cement by Class F fly ash, GGBFS, metakaolin, or silica fume shall be as follows in Table 1.

Table 1- Cementitious Materials for Soluble Sulfate Conditions

Sulfate Exposure	Water-soluble sulfate (SO4) in soil, % by mass	Sulfate (SO4)in water, ppm	Cementitious material required*
Moderate and Seawater	0.10 - 0.20	150 - 1,500	Type II **, ***, **** cement, or Type I cement with one of the following replacements of cement by weight: 25% Class F fly ash, 50% GGBFS, 10% metakaolin, or 8% silica fume
Severe	0.20 - 2.00	1,500 - 10,000	Type II ** cement with one of the following replacements of cement by weight: 25% Class F fly ash, 50% GGBFS, 10% metakaolin, or 8% silica fume

* The values listed in this table for replacement of Portland cement by the cementitious materials listed are maximums and shall not be exceeded. The minimum tolerance for replacement shall be 0.5% below the maximum replacement content. Replacement contents below this minimum tolerance by the cementitious materials listed in this table do not meet the requirements for the exposure conditions listed and shall not be allowed.

** Type I cement conforming to AASHTO Designation: M85 with a maximum 8% tricalcium aluminate (C3A) may be used in lieu of Type II cement; this cement is given the designation "Type I(MS)". Type III cement conforming to AASHTO Designation: M85 with a maximum 8% tricalcium aluminate (C3A) may be used in lieu of Type II cement as allowed in Subsection 907-701.02.1; this cement is given the designation "Type III (MS)".

*** Blended cement meeting the sulfate resistance requirements of Subsection 907-701.04 may be used in lieu of Type II as allowed in Subsection 907-701.04. No additional cementitious materials shall be added to or as a replacement for blended cement.

**** Class F fly ash or GGBFS may be added as a replacement for cement as allowed in Subsection 907-701.02.2.

Class C fly ash shall not be used as a replacement for cement in any of the sulfate exposure conditions listed above.

907-701.02.2.2--Cement for Soil Stabilization Exposed to Soluble Sulfate Conditions or Seawater. When Portland cement for use in soil stabilization is exposed to moderate or severe soluble sulfate conditions, or to seawater, cement types and replacement of cement by Class F fly ash or GGBFS shall meet the requirements of Subsection 907-701.02.2.1. Neither metakaolin nor silica fume shall be used to bring the cementitious materials into compliance with the requirements of Table 1.

Delete Subsection 701.03 on page 596, and substitute the following:

907-701.03--Masonry Cement. Masonry cement shall conform to ASTM Designation: C 91 and shall only be used in masonry applications.

Delete Subsection 701.04 on page 596, and substitute the following:

907-701.04--Blended Hydraulic Cement.

907-701.04.1--General.

907-701.04.1.1--Types of Blended Cement. Blended hydraulic cements (blended cements) shall be of the following types and conform to AASHTO Designation: M 240:

Type I(SM) – Slag-modified Portland cement
Type IS – Portland blast-furnace slag cement
Type I(PM) – Pozzolan-modified Portland cement
Type IP – Portland-pozzolan cement

Blended cement for use in Portland cement concrete or soil stabilization exposed to the moderate soluble sulfate condition or exposure to seawater as defined in Table 1 shall meet the Sulfate resistance requirement listed in AASHTO Designation: M 240, Table 2 and the "(MS)" suffix shall be added to the type designation.

907-701.04.1.2--Alkali Content. All blended cement types in this Subsection shall meet the Mortar expansion requirements listed in AASHTO Designation: M 240, Table 2.

907-701.04.2--Replacement by Other Cementitious Materials. No additional cementitious materials, such as Portland cement, performance hydraulic cement, fly ash, GGBFS, metakaolin, or others, shall be added to or as a replacement for blended cement.

907-701.04.3--Exposure to Soluble Sulfate Conditions or Seawater. When Portland cement concrete or blended cement for soil stabilization is exposed to moderate soluble sulfate conditions or to seawater, where the moderate soluble sulfate condition is defined in Table 1, the blended cement shall meet the sulfate resistance requirement listed in AASHTO Designation: M 240, Table 2.

When Portland cement concrete or blended cement for soil stabilization is exposed to severe soluble sulfate conditions, where the severe soluble sulfate condition is defined in Table 1, blended cements shall not be used.

MISSISSIPPI DEPARTMENT OF TRANSPORTATION

SPECIAL PROVISION NO. 907-703 DB **CODE: (SP)**

DATE: 06/01/2009

SUBJECT: Aggregates

Section 703, Aggregates, of the 2004 Edition of the Mississippi Standard Specifications for Road and Bridge Construction is hereby amended as follows:

907-703.03.2.4--Gradation. Delete the last sentence of the last paragraph of Subsection 703.03.2.4 on page 611.

907-703.04--Aggregate for Crushed Stone Courses.

907-703.04.1--Coarse Aggregate. Delete the first sentence of the first paragraph of Subsection 703..04.1 on page 611, and substitute the following:

Coarse aggregate, defined as material retained on No. 8 sieve, shall be either crushed stone, slag, granite, shell, gravel, concrete, or combination thereof.

907-703.04.2--Fine Aggregate. Delete the first sentence of the first paragraph of Subsection 703..04.2 on page 611, and substitute the following:

Fine aggregate, defined as material passing no. 8 sieve, shall be material resulting from the crushing of stone, slag, gravel, concrete, or combination thereof.

907-703.04.3--Gradation. Add the following to the "TABLE OF SIZES AND GRADATION OF CRUSHED STONE AGGREGATE" in Subsection 703.04.3 on page 613.

Sieve Size	Percent Passing By Weight	
	Size No. 825	Crushed Stone
2 inch	100	
1 1/2 inch	90 - 100	100
1 inch	75-98	90 - 100
3/4 inch		
1/2 inch	60 - 85	62 - 90
3/8 inch		
No. 4	40 - 65	30 - 65
No. 8	28 - 54	
No. 10		15 - 40
No. 16	19 - 42	

No. 40		
No. 50	9 - 27	
No. 200	4 - 18	3 - 16

After the "TABLE OF SIZES AND GRADATION OF CRUSHED STONE AGGREGATE" in Subsection 703.04.3 on page 613, add the following:

907-703.04.4--Crushed Concrete. Crushed reclaimed concrete shall also be allowed as a crushed aggregate course provided it meets the requirements of Subsection 703.04 and the following.

Crushed Concrete

Sieve Size	Percent Passing By Weight
2 inch	
1 1/2 inch	100
1 inch	90 - 100
3/4 inch	
1/2 inch	60 - 85
3/8 inch	
No. 4	40 - 65
No. 8	28 - 54
No. 10	
No. 16	19 - 42
No. 40	
No. 50	9 - 27
No. 200	2 - 18

MISSISSIPPI DEPARTMENT OF TRANSPORTATION

SPECIAL PROVISION NO. 907-707 DB **CODE: (SP)**

DATE: 03/10/2009

SUBJECT: Joint Materials

Section 707, Joint Materials, of the 2004 Edition of the Mississippi Standard Specifications for Road and Bridge Construction is hereby amended as follows:

907-707.02.1.3--Concrete Joint Sealer Compound - Hot-Poured Elastic Type. In the first paragraph of Subsection 707.02.1.3 on page 633, delete "AASHTO Designation: M 173" and replace with "AASHTO Designation: M 324 for Type I Joint and Crack Sealant".

Delete in toto Subsection 707.02.1.5 on pages 634 and 635 and substitute:

907-707.02.1.5--Backer Rod for Use with Hot and Cold Poured Joint Sealer. The backer rod shall be a closed-cell foam rod made from polyethylene, polyolefin or similar type material, and shall conform to ASTM Designation: D 5249. The backer rod shall either be a Type 1, for use with either hot or cold poured joint sealers, or a Type 3, for use with cold poured joint sealers only.

The Contractor shall furnish a three (3) linear foot sample of each shipment, and three (3) copies of the manufacturer's certification that the backer rod meets the requirements of this specification.

MISSISSIPPI DEPARTMENT OF TRANSPORTATION

SPECIAL PROVISION NO. 907-711 DB **CODE: (IS)**

DATE: 06/26/2009

SUBJECT: Synthetic Structural Fiber Reinforcement

Section 711, Reinforcement and Wire Rope, of the 2004 Edition of the Mississippi Standard Specifications for Road and Bridge Construction is hereby amended as follows:

After Subsection 711.03.4.3 on page 665, add the following:

907-711.04--Synthetic Structural Fiber. The synthetic structural fibers shall be approved for listing in the Department's "Approved Sources of Materials" prior to use. The synthetic structural fibers shall be added to the concrete and mixed in accordance with the manufacturer's recommended methods.

907-711.04.1--Material Properties. The fibers shall meet the requirements of ASTM Designation: C 1116, Section 4.1.3. The fibers shall be made of polypropylene, polypropylene/polyethylene blend, nylon, or polyvinyl alcohol (PVA).

907-711.04.2--Minimum Dosage Rate. The dosage rate shall be such that the average residual strength ratio ($R_{150,3.0}$) of fiber reinforced concrete beams is a minimum of 20.0 percent when the beams are tested in accordance with ASTM Designation: C 1609. The dosage rate for fibers shall be determined by the following.

The fiber manufacturer shall have the fibers tested by an acceptable, independent laboratory acceptable to the Department and regularly inspected by the Cement and Concrete Reference Laboratory of the National Institutes of Standards and Technology and approved to perform ASTM Designations: C 39, C 78, and C192.

The laboratory shall test the fibers following the requirements of ASTM Designation: C 1609 in a minimum of three (3) test specimens cast from the same batch of concrete, molded in 6 x 6 x 20-inch standard beam molds meeting the requirements of ASTM Designation: C 31. The beams shall be tested on an 18-inch span. The tests for $R_{150,3.0}$ shall be performed when the average compressive strength of concrete used to cast the beams is between 3500 and 4500 psi. The tests for compressive strength shall follow the requirements of ASTM Designation: C 39. The average compressive strength shall be determined from a minimum of two (2) compressive strength cylinders.

The value for $R_{150,3}$ shall be determined using the following equation:

$$R_{150,3.0} = \frac{f_{150,3.0}}{f_1} \times 100$$

The residual flexural strength ($f_{150,3.0}$) shall be determined using the following equation:

$$f_{150,3.0} = \frac{P_{150,3.0} \times L}{b \times d^2}$$

where:

$f_{150,3.0}$ is the residual flexural strength at the midspan deflection of L/150, (psi),

$P_{150,3.0}$ is the residual load capacity at the midspan deflection of L/150, (lbf),

L is the span, (in),

b is the width of the specimen at the fracture, (in), and

d is the depth of the specimen at the fracture, (in).

For a 6 x 6 x 20-inch beam, the $P_{150,3.0}$ shall be measured at a midspan deflection of 0.12 inch.

Additionally, $R_{150,3.0}$, $f_{150,3.0}$, and $P_{150,3.0}$ may also be referred to as R_{150}^{150}, f_{150}^{150}, and P_{150}^{150} respectively.

At the dosage rate required to achieve the minimum $R_{150,3}$, the mixture shall both be workable and the fibers shall not form clumps.

The manufacturer shall submit to the State Materials Engineer certified test reports from the independent laboratory showing the test results of each test specimen.

907-711.04.3--Job Control Requirements. The synthetic structural fibers shall be one from the Department's "Approved Sources of Materials."

At the required dosage rate, the mixture shall both be workable and the fibers shall not form clumps to the satisfaction of the Engineer. If the mixture is determined by the Engineer to not be workable or have clumps of fibers, the mixture may be rejected.

MISSISSIPPI DEPARTMENT OF TRANSPORTATION

SPECIAL PROVISION NO. 907-713 DB **CODE: (SP)**

DATE: 03/10/2009

SUBJECT: Admixtures for Concrete

Section 713, Concrete Curing Materials and Admixtures, of the 2004 Edition of the Mississippi Standard Specifications for Road and Bridge Construction is hereby amended as follows:

After the second paragraph of Subsection 713.01.2 on page 676, add the following.

Type 1-D compound may be used on bridge rails, median barriers, and other structures requiring a spray finish. When Type 1-D compound is used, it will be the Contractor's responsibility to assure that the compound has dissipated from the structure prior to applying the spray finish and that the spray finish adheres soundly to the structure.

Delete Subsection 713.02 on pages 676 & 677, and substitute the following:

907-713.02--Admixtures for Portland Cement Concrete. Admixtures shall only be approved by MDOT for classification as a single type following the applicable types from AASTHO Designation: M 154 or M 194, or the definition of a mid-range water reducer listed below with the following exception: when requested by the manufacturer MDOT will consider classifying an admixture as both a Type A and a Type D. Admixtures shall only be used in accordance with the manufacturer's recommended dosage range for that type. Where an admixture is classified as both a Type A and Type D, the dosage range for use as a Type A shall not overlap the dosage range for use as a Type D.

Air-entraining admixtures shall comply with AASHTO Designation: M 154. Set-retarding, accelerating, and/or water-reducing admixtures shall comply with AASHTO Designation: M 194. Mid-range water-reducers are classified as water-reducing admixtures that reduce the mix water a minimum of 8% when compared to a control mix with no admixtures when tested in accordance with the requirements in AASHTO Designation: M 194. The type designation for admixtures approved by MDOT and classified as meeting the requirements of a mid-range water-reducer shall be "MR".

907-713.02.1--Source Approval. In order to obtain approval of an admixture, the Producer/Suppliers shall submit to the Construction Quality Control Manager the following for review: certified test reports, made by an acceptable independent laboratory regularly inspected by the Cement and Concrete Reference Laboratory of the National Institutes of Standards and Technology, which show that the admixture meets all the requirements of the applicable AASHTO or MDOT Specification for the specific type and the dosage range for the specific type of admixture.

907-713.02.2--Specific Requirements. Admixtures containing chlorides will not be permitted.

907-713.02.3--Acceptance. MDOT reserves the right to sample, for check tests, any shipment or lot of admixture delivered to the Project.

MDOT reserves the right to require tests of the material to be furnished, using the specific cement and aggregates proposed for use on the Project, as suggested in AASHTO Designation: M 154 and outlined in AASHTO Designation: M 194.

Failure to maintain compliance with any requirement of these specifications shall be cause for rejection of any previously approved source or brand of admixture.

With each new lot of material shipped the Contractor shall submit to the Construction Quality Control Manager, a notarized certification from the manufacturer showing that the material complies with the requirements of the applicable AASHTO or MDOT Specification.

When an admixture is used, it shall be the responsibility of the Contractor to produce satisfactory results.

MISSISSIPPI DEPARTMENT OF TRANSPORTATION

SPECIAL PROVISION NO. 907-714 DB **CODE: (SP)**

DATE: 03/10/2009

SUBJECT: Miscellaneous Materials

Section 714, Miscellaneous Materials, of the 2004 Edition of the Mississippi Standard Specifications for Road and Bridge Construction is hereby amended as follows:

907-714.05--Fly Ash. Delete Subsections 714.05.1 & 714.05.2 on pages 680 & 681, and substitute the following:

907-714.05.1--General. The fly ash source must be approved for listing in MDOT's "Approved Sources of Materials" prior to use. The acceptance of fly ash shall be based on certified test reports, certification of shipment from the supplier, and tests performed on samples obtained after delivery in accordance with MDOT's Materials Division Inspection, Testing, and Certification Manual and MDOT SOP.

Different classes of fly ash or different sources of the same class shall not be mixed or used in the construction of a structure or unit of a structure without written permission from the Engineer.

The Contractor shall provide suitable means for storing and protecting the fly ash from dampness. Separate storage silos, bins, or containers shall be provided for fly ash. Fly ash which has become partially set or contains lumps of caked fly ash shall not be used.

The temperature of the bulk fly ash shall not be greater than 165°F at the time of incorporation into the work.

All classes of fly ash shall meet the supplementary option chemical requirement for available alkalies listed in AASHTO Designation: M 295, Table 2. Class F fly ash shall have a calcium oxide (CaO) content of less than 6.0%. Class C fly ash shall have a CaO content of greater than or equal to 6.0%.

The replacement of Portland cement with fly ash shall be in accordance with the applicable replacement content specified in Subsection 907-701.02.2.

In addition to these requirements, fly ash shall meet the following specific requirements for the intended use.

907-714.05.2--Fly Ash for Use in Concrete. When used with Portland cement in the production of concrete or grout, the fly ash shall meet the requirements of AASHTO Designation: M 295, Class C or F, with the following exceptions:

The loss on ignition shall not exceed 6.0%.

The strength activity index with Portland cement shall be at least 55% of the control mix at seven (7) days.

No additional cementitious materials, such as blended hydraulic cement, GGBFS, metakaolin, or others, shall be added to or as a replacement for Portland cement when used with fly ash.

907-714.06--Ground Granulated Blast Furnace Slag (GGBFS). Delete Subsection 714.06.1 on page 681, and substitute the following:

907-714.06.1--General. The GGBFS source must be approved for listing in MDOT's "Approved Sources of Materials" prior to use. The acceptance of GGBFS shall be based on certified test reports, certification of shipment from the supplier, and tests performed on samples obtained after delivery in accordance with MDOT's Materials Division Inspection, Testing, and Certification Manual and MDOT SOP.

The Contractor shall provide suitable means for storing and protecting the GGBFS against dampness and contamination. Separate storage silos, bins, or containers shall be provided for GGBFS. GGBFS which has become partially set, caked or contains lumps shall not be used.

The State Materials Engineer shall be notified in writing of the nature, amount and identity of any processing or other additions made to the GGBFS during production.

GGBFS from different mills shall not be mixed or used alternately in any one (1) class of construction or structure without written permission from the Engineer; except that this requirement will not be applicable to cement treatment of design soils or bases.

No additional cementitious materials, such as blended hydraulic cement, fly ash, metakaolin, or others, shall be added to or as a replacement for Portland cement when used with GGBFS in the production of concrete. The replacement of Portland cement with GGBFS shall be in accordance with the applicable replacement content specified in Subsection 907-701.02.2.

Delete Subsection 714.07 on page 682, and substitute the following:

907-714.07--Additional Cementitious Materials.

907-714.07.1--Metakaolin.

907-714.07.1.1--General. Metakaolin shall only be used as a supplementary cementitious material in Portland cement concrete for compliance with the requirements for cementitious materials exposed to soluble sulfate conditions. Metakaolin from different sources shall not be mixed or used alternately in any one (1) class of construction or structure without written permission from the Engineer. No additional cementitious materials, such as blended hydraulic cement, fly ash, GGBFS, or others, shall be added to or as a replacement for Portland cement when used with metakaolin in the production of concrete.

The State Materials Engineer shall be notified in writing of the nature, amount and identity of any processing, or other additions made to the metakaolin during production.

907-714.07.1.2--Source Approval. The approval of each metakaolin source shall be on a case by case basis as determined by the State Materials Engineer. In order to obtain approval of a metakaolin source, the Producer/Suppliers shall submit to the State Materials Engineer the following for review: certified test reports, made by an acceptable, independent laboratory regularly inspected by the Cement and Concrete Reference Laboratory of the National Institutes of Standards and Technology, which show that

the metakaolin meets all the requirements of AASHTO Designation: M295, including the Effectiveness in Contributing to Sulfate Resistance, Procedure A, listed in AASHTO Designation: M295, Table 4 for Supplementary Optional Physical Requirements, and other requirements listed herein.

In order to demonstrate effectiveness in contributing to sulfate resistance, included in this test data shall be results of metakaolin from the proposed source tested in accordance with ASTM Designation: C 1012. There shall be two (2) sets of test specimens per the following:

a. One (1) set of test specimens shall be prepared using a Type I Portland cement meeting the requirements of AASHTO Designation: M85 and having a tricalcium aluminate (C_3A) content of more than 8.0%.

b. One (1) set of test specimens shall be prepared using a Type II Portland cement meeting the requirements of AASHTO Designation: M85.

c. The proposed metakaolin shall be incorporated at the rate of 10% cement replacement in each set of test specimens and shall meet both of the acceptance criteria listed below for source approval.

The requirement for acceptance of the test sample using Type I Portland cement is an expansion of 0.10% or less at the end of six (6) months. The requirement for acceptance of the test sample using Type II Portland cement is an expansion of 0.05% or less at the end of six (6) months.

907-714.07.1.3--Storage. The Contractor shall provide suitable means for storing and protecting the metakaolin against dampness and contamination. Metakaolin which has become partially set, caked, or contains lumps shall not be used.

907-714.07.1.4--Specific Requirements. Metakaolin shall meet the requirements of AASHTO Designation: M 295, Class N with the following modifications:

1. The sum of SiO_2 + Al_2O_3 + Fe_2O_3 shall be at least 85%. The Material Safety Data Sheet shall indicate that the amount of crystalline silica, as measured by National Institute of Occupation Safety and Health (NIOSH) 7500 method, after removal of the mica interference, is less than 1.0%.
2. The loss on ignition shall be less than 3.0%.
3. The available alkalis, as equivalent Na_2O, shall not exceed 1.0%.
4. The amount of material retained on a No. 325 mesh sieve shall not exceed 1.0%.
5. The strength activity index at seven (7) days shall be at least 85%.

907-714.07.1.5--Acceptance. With each new lot of material shipped the Contractor shall submit to the State Materials Engineer a certified test report from the manufacturer showing that the material meets the requirements AASHTO Designation: M295, Class N and the requirements of this Subsection.

MDOT reserves the right to sample, for check tests, any shipment or lot of metakaolin delivered to the Project.

907-714.07.2--Silica Fume.

907-714.07.2.1--General. Silica fume shall only be used as a supplementary cementitious material in Portland cement concrete for compliance with the requirements for cementitious materials exposed to soluble sulfate conditions. Silica fume from different sources shall not be mixed or used alternately in any one (1) class of construction or structure without written permission from the Engineer. No additional cementitious materials, such as blended hydraulic cement, performance hydraulic cement, fly

ash, GGBFS, or others, shall be added to or as a replacement for Portland cement when used with silica fume in the production of concrete.

The State Materials Engineer shall be notified in writing of the nature, amount and identity of any processing, or other additions made to the silica fume during production.

907-714.07.2.2--Source Approval. The approval of each silica fume source shall be on a case by case basis as determined by the State Materials Engineer. In order to obtain approval of a silica fume source, the Producer/Suppliers shall submit to the State Materials Engineer the following for review: certified test reports, made by an acceptable, independent laboratory regularly inspected by the Cement and Concrete Reference Laboratory of the National Institutes of Standards and Technology, which show that the silica fume meets all the requirements of AASHTO Designation: M307, Table 3, including the Sulfate resistance expansion, listed in the table for Optional Physical Requirements, and other requirements listed herein.

In order to demonstrate effectiveness in contributing to sulfate resistance, included in this test data shall be results of silica fume from the proposed source tested in accordance with ASTM Designation: C 1012. There shall be two (2) sets of test specimens per the following:

a. One (1) set of test specimens shall be prepared using a Type I Portland cement meeting the requirements of AASHTO Designation: M85 and having a tricalcium aluminate (C_3A) content of more than 8.0%,

b. One set of test specimens shall be prepared using a Type II Portland cement meeting the requirements of AASHTO Designation: M85.

c. The proposed silica fume shall be incorporated at the rate of 8% cement replacement in each set of test specimens and shall meet both of the acceptance criteria listed below for source approval.

The requirement for acceptance of the test sample using Type I Portland cement is an expansion of 0.10% or less at the end of six (6) months. The requirement for acceptance of the test sample using Type II Portland cement is an expansion of 0.05% or less at the end of six (6) months.

907-714.07.2.3--Storage. The Contractor shall provide suitable means for storing and protecting the silica fume against dampness and contamination. Silica fume which has become partially set, caked, or contains lumps shall not be used.

907-714.07.2.4--Acceptance. With each new lot of material shipped, the Contractor shall submit to the State Materials Engineer a certified test report from the manufacturer showing that the material meets the Chemical and Physical Requirements of AASHTO Designation: M307.

MDOT reserves the right to sample, for check tests, any shipment or lot of silica fume delivered to the Project.

907-714.11.6--Rapid Setting Commercial Grouts and Concrete Patching Compounds. Delete the first sentence of the first paragraph of Subsection 714.11.6 on page 690 and substitute the following:

Rapid setting commercial grouts and concrete patching compounds must be approved for listing in MDOT's "Approved Sources of Materials" prior to use. Upon approval, a product must be recertified every four (4) years to remain on the "Approved Sources of Materials" list. Each product shall be pre-measured and packaged dry by the manufacturer.

907-714.11.7--Commercial Grout for Anchoring Doweled Tie Bars in Concrete. Before Subsection 714.11.7.1 on page 691, add the following:

Approved Non-"Fast Set" Epoxy anchor systems as specified below may be used for the repair of concrete pavements that do not involve permanent sustained tension applications or overhead applications.

"***Fast Set Epoxy***" may not be used for any Adhesive Anchor Applications. Adhesive Anchor Systems (Fast Set epoxy or otherwise) shall not be used for permanent sustained tension applications or overhead applications. "Fast Set Epoxy" refers to an epoxy produced by the Sika Corporation called Sikadur AnchorFix-3 and repackaged for sale under a variety of names/companies listed at the Federal Highway Administration web site at the following link:

http://www.fhwa.dot.gov/Bridge/adhesives.cfm

907-714.11.7.4--Acceptance Procedure. After the last sentence of the first paragraph of Subsection 714.11.4 on page 691, add the following:

Upon approval, a product must be recertified every four (4) years to remain on the "Approved Sources of Materials" list.

907-714.11.8--Epoxy Joint Repair System.

907-714.11.8.1--General. After the last sentence of the first paragraph of Subsection 714.11.8.1 on page 692, add the following:

Upon approval, a product must be recertified every four (4) years to remain on the "Approved Sources of Materials" list.

After the table at the end of Subsection 714.15 on page 701 add the following:

907-714.16--Stabilizing Fibers.

907-714.16.1--General. Stabilizing fibers shall be used in Stone Matrix Asphalt (SMA) mixtures and other mixtures, as necessary, for draindown reduction. Fibers shall be added at a minimum dosage rate of 0.30% for both cellulose and mineral fibers by weight of total mix. The produced mixture containing the fibers shall exhibit a draindown of 0.30% or less when tested in accordance with Mississippi Test Method MT-82.

Either cellulose or mineral fibers may be used. A pelletized fiber comprised of either cellulose or mineral fiber may also be used.

907-714.16.2--Cellulose Fibers. Cellulose fibers shall conform to the following properties:

Property	**Specification Requirement**
Fiber Length	0.25 inch maximum
Sieve Analysis	
a. Alpine Air Jet Sieve Method	60 – 80 percent

(Passing No. 100 sieve)	
b. Mesh Screen Sieve Method	
(Passing No. 20 sieve)	75 – 95 percent
(Passing No. 40 sieve)	55 – 75 percent
(Passing No. 100 sieve)	20 – 40 percent
Ash Content	18.0 ± 5 percent
PH	7.5 ± 1.0
Oil Absorption	5.0 ± 1.0
Moisture Content	5.0 percent maximum

907-714.16.3--Mineral Fibers. Mineral fibers shall conform to the following properties:

Property	**Specification Requirement**
Average Fiber Length	0.25 inch maximum
Average Fiber Thickness	0.0002 inch maximum
Shot Content (ASTM C612)	
(Passing the No. 60 sieve)	85 – 95 percent
(Passing the No. 230 sieve)	60 – 80 percent

907-714.16.4--Pelletized Fibers.
Pelletized fibers shall conform to the properties provided in Subsection 907-714.16.2 or 907-714.16.3.

MISSISSIPPI DEPARTMENT OF TRANSPORTATION

SPECIAL PROVISION NO. 907-715 DB **CODE: (SP)**

DATE: 03/10/2009

SUBJECT: Roadside Development Materials

Section 715, Roadside Development Materials, of the 2004 Edition of the Mississippi Standard Specifications for Road and Bridge Construction is hereby amended as follows:

907-715-02.2.1--Agricultural Limestone. Delete the first sentence of Subsection 715-02.2.1 on page 704 and substitute the following.

Agricultural limestone shall be either a hard-rock limestone material or a marl or chalk agricultural liming material as addressed in the latest amendment to the Mississippi Agricultural Liming Material Act of 1993, published by the Mississippi Department of Agriculture and Commerce.

907-715.02.2.1.1--Screening Requirements. Delete the first sentence of Subsection 715.02.2.1.1 on page 704.

Delete Subsection 715.02.2.1.2 on page 704 and substitute the following:

907-715-02.2.1.2--Calcium Carbonate Equivalent. Marl or chalk liming material shall not have less than 70% calcium and magnesium carbonate calculated as calcium carbonate equivalent when expressed on a dry weight basis.

907-715-02.2.1.3--Neutralizing Values. Hard-rock limestone material shall have a minimum Relative Neutralizing Value (RNV) of 63.0%, which is determined as follows:

% RNV = CCE x (% passing #10 mesh + % passing #50 mesh)/2

Where: CCE = Calcium Carbonate Equivalent

907-715.03--Seed.

907-715.03.2--Germination and Purity Requirements. Add the following to Table B on page 705.

Name (Kind)	Name (Variety)	Percent Germination	Percent Purity
GRASSES			
Rye Grass	Annual	80	98

MISSISSIPPI DEPARTMENT OF TRANSPORTATION

SPECIAL PROVISION NO. 907-803 DB **CODE: (SP)**

DATE: 03/10/2009

SUBJECT: Maturity Meters in Drilled Shafts

Section 803, Deep Foundations, of the 2004 Edition of the Mississippi Standard Specifications for Road and Bridge Construction is hereby amended as follows:

907-803.03--Construction Requirements.

907-803.03.2--Drilled Shafts.

907-803.03.2.3.1.1--Protection of Existing Structures. Delete the fifth sentence of the first paragraph of Subsection 803.03.2.3.1.1 on page 820, and substitute the following:

Advancing an uncased drilled shaft excavation or the use of a vibratory hammer to install casings within 30 feet of a newly constructed shaft will not be permitted unless the concrete in that shaft has attained a compressive strength of 2,500 psi, as determined by cylinder tests, or maturity meter probe when maturity meter readings indicate that the required concrete strength is achieved.

After the first paragraph of Subsection 803.03.2.3.1.1 on page 820, add the following:

If a maturity meter probe is used, it shall be located in the last concrete placed. Procedures for using the maturity meter and developing the strength/maturity relationship shall follow the requirements of AASHTO Designation: T 325 and ASTM Designation: C 1074 specifications. Technicians using the maturity meter or calculating strength/maturity graphs shall be required to have at least two (2) hours of training prior to using the maturity equipment.

907-803.03.2.7--Concrete Placement.

907-803.03.2.7.1--General. Delete the last sentence of the fifth paragraph of Subsection 803.03.2.7.1 on pages 834.

907-803.03.2.8.1--Static Load Tests. Delete the first sentence of the first paragraph of Subsection 803.03.2.8.1 on pages 836 & 837, and substitute the following:

Static load testing shall not begin until the concrete has attained a compressive strength of 3,000 psi as determined from cylinder tests, or maturity meter probe in accordance with Subsection 803.03.2.3.1.1. If a maturity meter probe is used, it shall be located in the last concrete placed.

Delete Subsections 803.04 and 803.05 beginning on page 840 and substitute the following:

907-803.04--Blank.

907-803.05--Blank.

MISSISSIPPI DEPARTMENT OF TRANSPORTATION

SPECIAL PROVISION NO. 907-804 DB **CODE: (SP)**

DATE: 03/10/2009

SUBJECT: Concrete Bridges And Structures

Section 804, Concrete Bridges And Structures, of the 2004 Edition of the Mississippi Standard Specifications for Road and Bridge Construction is hereby amended as follows:

907-804.02-- Materials.

907-804.02.1--General. Delete the third and fourth sentences of the first paragraph of Subsection 804.02.1 on page 846, and substitute the following:

For projects with 1,000 cubic yards and more, quality control and acceptance shall be achieved through statistical evaluation of test results. For projects of more than 200 but less than 1,000 cubic yards, quality control and acceptance shall be achieved by individual test results.

Add the following materials to the list of materials in Subsection 804.02.1 on page 847.

Blended Cement ..... 907-701.01 and 907-701.04
Ground Granulated Blast Furnace Slag (GGBFS) 907-714.06
Metakaolin..... 907-714.07
Silica Fume..... 907-714.07.2

907-804.02.8--Laboratory Accreditation. In Table 1 of Subsection 804.02.8 on page 849, substitute AASHTO: R 39 - Making and Curing Concrete Test Specimens in the Laboratory for AASHTO: T 126 - Making and Curing Concrete Test Specimens in the Laboratory.

907-804.02.9--Testing Personnel. Delete Table 2 in this subsection and replace it with the following.

Table 2

Concrete Technician's Tasks	Test Method Required	Certification Required**
Sampling or Testing of Plastic Concrete	AASHTO Designation: T 23, T 119, T 121, T 141, T 152, T 196, and ASTM Designation: C 1064	MDOT Class I certification
Compressive Strength Testing of Concrete Cylinders	AASHTO Designation: T 22 and T 231	MDOT Concrete Strength Testing Technician certification
Sampling of Aggregates	AASHTO Designation: T 2	work under the supervision of an MDOT Class II certified technician
Testing of Aggregates	AASHTO Designation: T 19, T 27, T 84, T 85, T 248, and T 255	MDOT Class II certification
Proportioning of Concrete	AASHTO Designation: M 157 and	MDOT Class III

Concrete Technician's Tasks	Test Method Required	Certification Required**
Mixtures*	R 39	
Interpretation and Application of Maturity Meter Readings	AASHTO Designation: T 325 and ASTM Designation: C 1074	MDOT Class III or Two (2) hours maturity method training

* Technicians making concrete test specimens for meeting the requirements of Subsection 804.02.10.1.2 shall be MDOT Class I certified and under the direct supervision of an MDOT Class III certified technician.

** MDOT Class I certification encompasses the same test procedures and specifications as ACI Concrete Field Testing Technician Grade I. MDOT Class II certification encompasses the same test procedures and specifications as ACI Aggregate Testing Technician - Level 1. MDOT Concrete Strength Testing Technician encompasses the same test procedures and specifications as ACI Concrete Strength Testing certification.

For specifics about the requirements for each level of certification, please refer to the latest edition of MDOT's *Concrete Field Manual*. Technicians holding current MDOT Class I, MDOT Class II and/or MDOT Class III certifications shall be acceptable until those certifications expire. Upon a current certification expiration, recertification with the certifications listed in Table 2 shall be required. Technicians currently performing either specific gravity testing of aggregates or compressive strength tests shall be required to either:

- have the required MDOT certification listed in Table 2, or
- have a current MDOT Class III certification or work under the direct supervision of current MDOT Class III technician, and have demonstrated the specific gravity and/or compressive strength test during the inspection of laboratory equipment by the Materials Division, Concrete Section.

907-804.02.10--Portland Cement Concrete Mix Design. Delete the first sentence of the first paragraph of Subsection 804.02.10 on page 850 and substitute the following:

At least 30 days prior to production of concrete, the Contractor shall submit to the Engineer proposed concrete mix designs complying with MDOT's *Concrete Field Manual*.
Delete the Notes under Table 3 of Subsection 804.02.10 on pages 850 & 851, and substitute the following:

* Maximum size aggregate shall conform to the concrete mix design for the specified aggregate.

** The replacement limits of Portland cement by weight by other cementitious materials (such as fly ash, GGBFS, metakaolin, silica fume, or others) shall be in accordance with the values in Subsection 907-701.02. Other hydraulic cements may be used in accordance with the specifications listed in Section 701.

*** The slump may be increased up to six (6) inches with an approved mid-range water reducer or up to eight (8) inches with an approved type F or G high range water reducer, in accordance with 907-713.02. Minus slump requirements shall meet those set forth in Table 3 of AASHTO M157 specifications.

**** Entrained air is not required except for concrete exposed to seawater. For concrete exposed to seawater, the total air content shall be 3.0 % to 6.0%. For concrete not exposed to seawater, the total air content shall not exceed 6.0%.

***** Class DS Concrete for drilled shafts shall have an 8±1-inch slump.

Delete the last paragraph of Subsection 804.02.10 on page 851 and substitute the following:

Either Type A, D, F, G or mid-range chemical admixture, shall be used in all classes of concrete. Any combinations of water reducing admixtures shall be approved by the Construction Quality Control Manager before their use.

907-804.02.10.1.1--Proportioning on the Basis of Previous Field Experience of Trial Mixtures. Delete the first sentence of the first paragraph of Subsection 804.02.10.1.1 on page 851, and substitute the following:

Where a concrete production facility has a record, based on at least 10 consecutive strength tests from at least 10 different batches within the past 12 months from a mixture not previously used on MDOT projects, the standard deviation shall be calculated.

907-804.02.10.3--Field Verification of Concrete Mix Design. Delete the third sentence of the third paragraph of Subsection 804.02.10.3 on page 853, and substitute the following:

If the requirements of yield, slump, or total air content are not met within three (3) production days after the first placement, subsequent field verification testing shall not be permitted on department projects, and the mix design shall not be used until the requirements listed above are met.

907-804.02.10.4--Adjustments of Mixture Proportions. Delete the paragraph in Subsection 804.02.10.4 on page 854, and substitute the following:

The mixture may be adjusted by the Class III Certified Technician representing the Contractor in accordance with the allowable revisions listed in MDOT's Concrete Field Manual, paragraph 5.7. Written notification shall be submitted to the Construction Quality Control Manager a minimum of seven (7) days prior to any source or brand of material change, aggregate size change, allowable material type change, or decrease in any cementitious material content. Any adjustments of the concrete mixture design shall necessitate repeat of field verification procedure as described in Subsection 804.02.10.3 and approval by the Construction Quality Control Manager.

907-804.02.11--Concrete Batch Plants. Delete the first three (3) paragraphs of Subsection 804.02.11 on page 854, and substitute the following:

The concrete batch plant shall meet the requirements of the National Ready Mixed Concrete Association *Quality Control Manual, Section 3, Plant Certification Checklist* as outlined in the latest edition of MDOT's *Concrete Field Manual*. The Contractor shall submit a copy of the approved checklist along with proof of calibration of batching equipment, i.e., scales, water meter, and admixture dispenser, to the Construction Quality Control Manager 30 days prior to the production of concrete.

For projects with 1,000 cubic yards and more, the concrete batch plant shall meet the requirements for an automatic system capable of recording batch weights. It shall also have automatic moisture compensation for the fine aggregate. For projects of more than 200 but less than 1,000 cubic yards the plant can be equipped for manual batching with a fine aggregate moisture meter visible to the plant operator.

The concrete batch plant shall have available adequate facilities to cool concrete during hot weather.

Mixer trucks to be used on each Phase of the Project are to be listed in the checklist and shall meet the requirements of the checklist.

907-804.02.12--Contractor's Quality Control. Delete the fourth paragraph of Subsection 804.02.12 on page 854 & 855, and substitute the following:

The Contractor's Quality Control program shall encompass the requirements of AASHTO Designation: M 157 into concrete production and control, equipment requirements, testing, and batch ticket information. The requirement of AASHTO Designation: M 157, Section 11.7 shall be followed except, on arrival to the job site, a maximum of 1½ gallons per cubic yard is allowed to be added. Water shall not be added at a later time. If the maximum permitted slump is exceeded after the addition of water at the job site, the concrete shall be rejected.

907-804.02.12.3--Documentation. After the second sentence of the second paragraph of Subsection 804.02.12.3 on page 856, add the following:

Batch tickets and gradation data shall be documented in accordance with MDOT requirements. Batch tickets shall contain all the information in AASHTO Designation: M157, Section 16 including the additional information in Subsection 16.2 with the following exception: the information listed in paragraphs 16.2.7 and 16.2.8 is not required. Batch tickets shall also contain the concrete producer's permanent unique mix number assigned to the concrete mix design.

907-804.02.12.5--Non-Conforming Materials. In Table 4 of Subsection 804.02.12.5 on page 857, delete "/ FM" from the requirements on line B.3.a.

907-804.02.13--Quality Assurance Sampling and Testing. Delete subparagraph c) in Subsection 804.02.13 on page 858 and substitute the following:

c) For concrete, the Contractor's QC and Department's QA testing of concrete compressive strengths compare when using the data comparison computer program with an alpha value of 0.01 for projects with 1,000 cubic yards and more; or, strength comparisons are within 990 psi for projects of more than 200 but less than 1,000 cubic yards.

In Table 5 of Subsection 804.02.13 on page 858, delete "and FM" from the requirements on line A.3.

907-804.02.13.1.4--Temperature. Delete the first paragraph of Subsection 804.02.13.1.4 on pages 859 & 860, and substitute the following:

Cold weather concreting shall follow the requirements of Subsection 907-804.03.16.1. Hot weather concreting shall follow the requirements of Subsection 804.03.16.2 with a maximum temperature of 95°F for Class DS concrete or for concrete mixes containing cementitious materials meeting the requirements of Subsection 907-701.02.2 as a replacement of Portland cement. For other concrete mixes, the maximum concrete temperature shall be 90°F. Concrete with a temperature more than the maximum allowable temperature shall be rejected.

907-804.02.13.1.5--Compressive Strength. Delete the heading of the second paragraph of Subsection 804.02.13.1.5 on page 860 and substitute the following:

Projects with 1,000 Cubic Yards and More.

Delete the second heading in Subsection 804.02.13.1.5 on page 860 and substitute the following:

Projects of More Than 200 but Less Than 1,000 Cubic Yards.

907-804.03--Construction Requirements.

907-804.03.15--Removal of Falsework, Forms, and Housing. Delete the first sentence of the second paragraph of Subsection 804.03.15 on page 871, and substitute the following:

Concrete in the last pour of a continuous superstructure shall have attained a compressive strength of 2,400 psi, as determined by cylinder tests or maturity meter probe, prior to striking any falsework.

Delete the first sentence of the third paragraph of Subsection 804.03.15 on page 871, and substitute the following:

At the Contractor's option and with the approval of the Construction Quality Control Manager, the time for removal of forms may be determined by cylinder tests, in accordance with the requirements listed in Table 6, in which case the Contractor shall furnish facilities for testing the cylinders.

Delete the fourth and fifth paragraphs of Subsection 804.03.15 on pages 871 & 872, and substitute the following:

The cylinders shall be cured under conditions which are not more favorable than those existing for the portions of the structure which they represent.

Delete the table in Subsection 804.03.15 on page 872, and substitute the following:

Table 6
Minimum Compressive Strength Requirements for Form Removal

Forms:	
Columns	1,000 psi
Side of Beams	1,000 psi
Walls not under pressure	1,000 psi
Floor Slabs, overhead	2,000 psi
Floor Slabs, between beams	2,000 psi
Slab Spans	2,400 psi
Other Parts	1,000 psi
Centering:	
Under Beams	2,400 psi
Under Bent Caps	2,000 psi
Limitation for Placing Beams on:	
Pile Bents, pile under beam	2,000 psi
Frame Bents, two or more columns	2,200 psi
Frame Bents, single column	2,400 psi

In lieu of using concrete strength cylinders to determine when falsework, forms, and housings can be removed, an approved maturity meter may be used to determine concrete strengths by inserting probes into concrete placed in a structure. The minimum number of maturity meter probes required for each structural component shall be in accordance with Table 7. Falsework, forms, and housings may be removed when maturity meter readings indicate that the required concrete strength is achieved. Procedures for using the maturity meter and developing the strength/maturity relationship shall follow the

requirements of AASHTO Designation: T 325 and ASTM Designation: C 1074 specifications. Technicians using the maturity meter or calculating strength/maturity graphs shall be required to have at least two (2) hours of training prior to using the maturity equipment.

Table 7
Requirements for use of Maturity Meter Probes

Structure Component	Quantity of Concrete	No. of Probes
Slabs, beams, walls, & miscellaneous items	0 - 30 yd^3	2
	> 30 to 60 yd^3	3
	> 60 to 90 yd^3	4
	> 90 yd^3	5
Footings, Columns & Caps	0 - 13 yd^3	2
	> 13 yd^3	3
Pavement, Pavement Overlays	1,200 yd^2	2
Pavement Repairs	Per repair or 900 yd^2 Whichever is smaller	2

907-804.03.16--Cold or Hot Weather Concreting.

907-804.03.16.1--Cold Weather Concreting. After the third paragraph of Subsection 804.03.16.1 on page 873, add the following:

In lieu of the protection and curing of concrete in cold weather, at the option of the Contractor with the approval of the Construction Quality Control Manager, when concrete is placed during cold weather and there is a probability of ambient temperatures lower than 40°F, an approved maturity meter may be used to determine concrete strengths by inserting probes into concrete placed in a structure. The minimum number of maturity meter probes required for each structural component shall be in accordance with Table 7. An approved insulating blanketing material shall be used to protect the work when ambient temperatures are less than 40°F and shall remain in place until the required concrete strength in Table 6 is achieved. Procedures for using the maturity meter and developing the strength/maturity relationship shall follow the requirements of AASHTO Designation: T 325 and ASTM Designation: C 1074 specifications. Technicians using the maturity meter or calculating strength/maturity graphs shall be required to have at least two (2) hours of training prior to using the maturity equipment.

Rename the Table in Subsection 804.03.16.1 on page 874 from “Table 6” to “Table 8”.

907-804.03.19--Finishing Concrete Surfaces.

907-804.03.19.7--Finishing Bridge Floors.

907-804.03.19.7.4--Acceptance Procedure for Bridge Deck Smoothness. After the first sentence of the second paragraph of Subsection 804.03.19.7.4 on page 886, add the following:
Auxiliary lanes, tapers, shoulders and other areas that are not checked with the profilograph, shall meet a 1/8 inch in 10-foot straightedge check made transversely and longitudinally across the deck or slab.

Delete Subsections 804.04 and 804.05 on pages 897 and 898 and substitute the following:

907-804.04--Blank.

907-804.05--Blank.

TABLE OF CONTENTS

1.0 INTRODUCTION 1-1

1.1 PROJECT DESCRIPTION 1-1

1.2 PLAN SET DEVELOPMENT 1-1

2.0 DESIGN AND CONSTRUCTION RESPONSIBILITIES 2-1

2.1 DESIGN CRITERIA 2-1

2.2 DESIGN REVIEW 2-1

2.2.1 Design Review Requirements 2-1

2.2.2 Preliminary Design Phase (Minimum 30% Plans) 2-1

2.2.3 Optional Design Review 2-2

2.2.4 Final Design Review Phases (100% Plans). 2-2

2.2.5 Released for Construction Documents. 2-2

2.2.6 Request for Information (RFI) Process. 2-3

2.2.7 Request for Revision (RFR) Process 2-3

2.2.8 As-Built Drawings and Records. 2-4

2.3 PROJECT MANAGEMENT 2-5

2.4 KEY PERSONNEL 2-5

2.5 DELIVERABLES 2-6

3.0 QUALITY CONTROL/QUALITY ASSURANCE (QC/QA) 3-1

3.1 DESIGN QUALITY CONTROL REQUIREMENTS 3-1

3.2 CONSTRUCTION QUALITY CONTROL REQUIREMENTS 3-1

3.3 PROCEDURES FOR CONSTRUCTION QUALITY CONTROL 3-4

3.4 MDOT'S CONSTRUCTION QUALITY ASSURANCE 3-5

3.5 UNCOVERING, REMOVAL AND CORRECTION OF WORK 3-5

3.6 ADDITIONAL TESTING 3-5

3.7 MDOT INSPECTION AND TESTING 3-6

3.8 INDEPENDENT ASSURANCE TESTING 3-6

3.9 CONTRACTOR'S OBLIGATION 3-6

3.10 DELIVERABLES 3-6

4.0 NOT USED 4-1

5.0 ENVIRONMENTAL COMPLIANCE 5-1

5.1 COMPLIANCE WITH ENVIRONMENTAL COMMITMENTS 5-1

5.2 DESIGN PHASE 5-1

5.3 PRECONSTRUCTION CONFERENCE(S) 5-1

5.4 CONSTRUCTION PHASE(S) 5-1

5.5 PROTECTION OF ARCHEOLOGICAL AND PALEONTOLOGICAL REMAINS AND MATERIALS 5-2

5.6 WETLANDS AND WATER QUALITY MITIGATION 5-2

5.7 REGULATORY COMPLIANCE 5-2

5.8 HAZARDOUS MATERIAL 5-3

5.8.1 Survey and Strategy for Remediation 5-3

5.8.2 Contractor Responsibilities 5-3

5.8.3 Commission Responsibilities 5-3

5.8.4 Resuming Work 5-3

5.8.5 Contract Price 5-3

5.8.6 Contractor's Hazardous Materials 5-3

TABLE OF CONTENTS

5.9 DELIVERABLES 5-4

6.0 NOT USED 6-1

7.0 UTILITIES 7-1

7.1 COMMISSION'S RESPONSIBILITIES 7-1
7.2 CONTRACTOR'S RESPONSIBILITY 7-1
7.3 RESOLUTION OF CONFLICTS 7-1
7.4 UTILITY AVOIDANCE AND LOSSES 7-1
7.5 PARALLEL SERVICE 7-1
7.6 COORDINATION 7-2
7.7 DOCUMENTATION 7-2
7.8 CERTIFICATION 7-2
7.9 UTILITY AS-BUILTS 7-2
7.10 DELIVERABLES 7-2

8.0 RIGHT-OF-WAY 8-1

8.1 NEW RIGHT-OF-WAY 8-1

9.0 SURVEY 9-1

9.1 PROJECT SURVEY COORDINATION 9-1
9.2 CONTRACTOR SUPPLIED SURVEY 9-1
9.3 PRESERVATION OF SURVEY CONTROL MONUMENTS 9-1
9.4 PERMISSION TO ENTER PROPERTY 9-1
9.5 RIGHT OF WAY MARKER 9-1
9.6 DELIVERABLES 9-1

10.0 GEOTECHNICAL 10-1

10.1 GEOTECHNICAL DESIGN CRITERIA 10-1
10.2 GROUND IMPROVEMENT 10-1
10.3 GEOTECHNICAL PLANNING REPORT 10-1
10.4 GEOTECHNICAL EXPLORATION 10-2
10.4.1 General 10-2
10.4.2 Bridge Foundations 10-2
10.4.3 Retaining Walls 10-2
10.4.4 Embankments 10-2
10.4.5 Laboratory Testing 10-3
10.4.6 Miscellaneous Structures 10-3
10.4.7 Geotechnical Report 10-3
10.5 DEEP FOUNDATION VERIFICATION 10-3
10.6 DELIVERABLES 10-3

11.0 SIGNING, PAVEMENT MARKING 11-1

11.1 SIGNING 11-1
11.2 PAVEMENT MARKING 11-1
11.2.1 Permanent Pavement Marking 11-1
11.2.2 Temporary Pavement Marking 11-1

12.0 DRAINAGE 12-1

12.1 DRAINAGE CRITERIA 12-1

TABLE OF CONTENTS

12.2 COORDINATION WITH OTHER AGENCIES 12-1
12.3 BRIDGES OVER WATERWAYS 12-1
12.4 DELIVERABLES 12-1

13.0 ROADWAYS AND PAVEMENTS 13-1

13.1 ROADWAY DESIGN CRITERIA 13-1
13.2 HORIZONTAL ALIGNMENT 13-1
13.3 VERTICAL ALIGNMENT 13-1
13.4 EARTHWORK AND GRADING 13-1
13.5 PAVEMENT SELECTION 13-1
13.6 ROADWAY SAFETY 13-1
13.6.1 Notes for Table 13-4-1 13-3
13.7 DELIVERABLES 13-3

14.0 NOT USED 14-1

15.0 STRUCTURES - WIDENINGS 15-1

15.1 DESIGN METHODOLOGY 15-1
15.2 LOADS AND FORCES 15-1
15.2.1 Live Loads 15-1
15.2.2 Thermal Movement 15-1
15.3 GENERAL REQUIREMENTS FOR BRIDGES 15-2
15.3.1 Bridge Superstructures 15-2
15.3.2 Bridge Substructures 15-2
15.3.3 Debris Removal 15-3
15.4 BRIDGE DESIGN CRITERIA 15-3
15.4.1 Concrete Design 15-3
15.4.2 Structural Steel Design 15-5
15.4.3 Structural Steel Fabrication Requirements 15-6
15.4.4 Deep Foundation Design 15-8
15.4.5 Bearings 15-9
15.4.6 Bridge Railings 15-9
15.4.7 Expansion Joints 15-9
15.4.8 Bridge Drainage 15-9
15.4.9 Cranes on Existing Bridges 15-10
15.4.10 Load Rating 15-10
15.4.11 Temporary Concrete Traffic Barriers 15-11
15.5 DELIVERABLES 15-11

16.0 MAINTENANCE OF TRAFFIC DURING CONSTRUCTION 16-1

16.1 TRAFFIC CONTROL PLANS 16-1
16.2 CONSTRUCTION REQUIREMENTS 16-1
16.3 EMERGENCY EVENTS 16-2
16.4 DELIVERABLES 16-2

17.0 TECHNICAL STANDARDS, DATA, REPORTS 17-1

1.0 INTRODUCTION

These Technical Requirements for Design and Construction provide the technical requirements for the Project. Initially capitalized terms used herein shall have the meaning as set forth in Special Provision No. 907-101 DB or Subsection 101.02 of Mississippi Standard Specifications for Road and Bridge Construction

Wherever in this document there is a reference to FHWA, AASHTO or other technical standards it is intended to refer to the list of contract required technical documents listed in Section 17.

1.1 Project Description

The Project Scope is defined as indicated in Section 904 – NTP No. 2618-D7-1 DB and on the Contractor's Schedule Certificate.

1.2 Plan Set Development

The development of the construction drawings for the Project shall follow MDOT's standard format for construction plans. The Released for Construction drawings each shall be prepared so that the Released for Construction drawings will form a portion of the overall Project set of drawings.

2.0 DESIGN AND CONSTRUCTION RESPONSIBILITIES

2.1 Design Criteria

It shall be the responsibility of the Contractor to design the Project using English units in accordance with the design criteria contained in these Technical Requirements.

The Contractor shall provide a completed set of construction plans with each sheet signed and sealed by a Professional Engineer licensed by the State.

Construction plans will be developed in Microstation Version 8.1 or later and GeoPak or as agreed to by MDOT and the Contractor.

2.2 Design Review

2.2.1 Design Review Requirements

Contractor shall submit the number of copies shown in Table 2.2-1 for preliminary and final design. Each submittal by the Contractor shall also contain TIFF (.tif files) images of all drawing and PDF copies of all reports and other submittal items. TIFF images shall be black and white (22 inches X 36 inches) and 300 DPI. Cross sections shall be submitted with final design submittal.

Table 2.2-1
Required Quantities—Construction Plan Sets

Commission Use	Number of Plan Sets
½ scale (11” x 17”) plans	20
Specifications	20
Reports	20

Responses to MDOT’s comments shall be returned within 14 Calendar days after the comments have been provided.

2.2.2 Preliminary Design Phase (Minimum 30% Plans)

The Contractor will prepare and submit a single preliminary design submittal for each location. Preliminary design shall include roadway plan and profile, bridge layouts (foundation plan, elevation view, and typical cross section), drainage, erosion control, major signs, pavement marking, and traffic control plans. Pavement marking plans may be omitted if the lane lines are provided on the roadway plan sheets. MDOT will review preliminary design submittals within twenty-one (21) days of the submittal. MDOT will provide any review comments.

The Contractor shall submit a certification that the submittal complies with the Design Quality Control Plan.

The Contractor shall schedule a meeting to be held after the review period with MDOT to review the comments. The Contractor shall incorporate the comments into the final design submittal to MDOT's satisfaction, unless an explanation satisfactory to MDOT is provided explaining why a comment has not been addressed in the final design.

2.2.3 Optional Design Review

At the request of the Contractor, MDOT will provide optional design reviews on design packages. MDOT, as appropriate, will review optional design Submittals within fourteen (14) days. MDOT will provide any review comments.

The Contractor may schedule a meeting with MDOT to be held after the review period to review the comments. The Contractor shall incorporate the comments into the plans and specifications to MDOT's satisfaction, unless an explanation satisfactory to MDOT is provided explaining why a comment has not been addressed in the final design

2.2.4 Final Design Review Phases (100% Plans).

1. After completion of the preliminary design, the final design may be broken down into packages (i.e. roadway, portions of bridges, drainage, etc.) as determined by the Contractor. Following completion of the design of a package, the Contractor shall prepare and submit a final design submittal for each package for review by MDOT. MDOT as appropriate will review the final design submittals within twenty-one (21) days. MDOT will provide any review comments.

2. The Contractor shall schedule a meeting to be held after the review period with MDOT to review the comments. The Contractor shall incorporate the comments into the plans and specifications to MDOT's satisfaction, unless an explanation satisfactory to MDOT is provided explaining why a comment has not been addressed in the final design

3. The final design submittal and any resubmittals required shall include drawings, details, specifications, computations, and supporting data to establish fully the intent of all construction to be accomplished. Final design submittals for bridges shall include the bridge load ratings and independent check calculations. All material shall be prepared under the supervision of and stamped by an engineer(s), surveyor(s), or architect, as appropriate, licensed to practice in the State of Mississippi.

4. The Contractor shall submit a certification that the submittal complies with the Design Quality Control Plan.

2.2.5 Released for Construction Documents.

Following the incorporation of MDOT's comments from the final design review phase, the Contractor shall prepare and submit a Release for Construction (RFC) submittal to MDOT for MDOT's final review and Released for Construction stamp. Two (2) full size reproducible sets, two (2) half scale sets of plans, two (2) sets of Project specifications, two (2) sets of all reports and quantities for civil construction shall be submitted to MDOT. The Contractor shall have a Professional Engineer licensed in the State, stamp and sign each sheet of the plans. MDOT shall

either stamp the plans and specifications "Released for Construction" and return one (1) full size reproducible set to the Contractor or return comments within seven (7) days. Once plans/specifications are Released for Construction, the Contractor shall provide twenty (20) copies of half scale sets of plans to MDOT within seven (7) days.

The Contractor shall submit a certification that the submittal complies with the Design Quality Control Plan.

MDOT's stamping of drawings as "Released for Construction" does not substantiate the adequacy or acceptability of the design or relieve the Contractor of its obligation to comply with all provisions of the Contract.

2.2.6 Request for Information (RFI) Process.

Any questions concerning clarification of the plans or specifications, substitutions or alternate concepts shall be submitted to the Engineer of Record for response with a copy to the MDOT Project Engineer. The Engineer of Record is responsible for providing the response to the Contractor. If the substitution or alternate concept is not acceptable to MDOT, then MDOT is responsible for providing a comment to the Engineer of Record and Contractor as soon as practical. If MDOT does not have an objection, and the Engineer of Record provides a clarification to the RFI then the Engineer of Record shall provide a response to the RFI and return the completed RFI to the Contractor. The Contractor will then submit the RFI to MDOT.

If the Engineer of Record agrees to a substitution or alternate concept then the RFI becomes a Request for Revision and follows the process detailed below.

The RFI shall use the attached form or similar document.

2.2.7 Request for Revision (RFR) Process.

Any revisions to the plans and specifications desired by Contractor or to correct deficiencies in the construction documents after the Submittal has been Released for Construction will require a Request for Revision (RFR). The Contractor shall submit a Request for Revision to MDOT. These shall be resubmitted to MDOT for review and re-release according to Section 2.2.5.

All Requests for Revision shall include the following: justification narrative, copies of pertinent correspondence, jurisdictional sign-off as necessary, any additional governmental approvals, index of impacted agencies with review comments and/or acknowledgements, preliminary drawings, engineering calculations and specifications, as necessary.

MDOT may accept or reject any Request for Revision. If MDOT accepts an RFR, the Contractor shall finalize all pertinent documentation, including final design drawings and specifications for final review and Release for Construction.

In no event shall the RFR process be used to change the Contract scope.

2.2.8 As-Built Drawings and Records.

1. Contractor Responsibilities. In addition to those documents set forth above, the Contractor shall provide to MDOT thirty (30) days after completion of a portion of the Project a complete set of record plans. Record drawings consist of the final design documents listed as follows: design plan CADD (Microstation) drawings, Geopak files and TIFF files that incorporate all changes, including any adjustments, plan and profiles of relocated utilities, additions and deletions that occurred during construction. The Contractor shall certify that the record drawings are a true and correct representation of the Work as constructed.

2. Plan Revision Box. Information regarding major revisions to the plans shall be noted in a revision box on the plans. The information listed in the revision box shall include: the initiator of the revision, a brief explanation of the nature of the revision.

3. Contents. In addition to the revisions that incorporated changes during construction, the record drawings shall include the following information gathered during construction:

a. The final profile of each bridge constructed. The profile shall include the elevation along the centerline and a line three feet inboard of each gutter line. Points on the profile shall be taken at no greater than 25-foot intervals and shall include the beginning and end of each span.

b. If any structure has pile foundations, information concerning the pile driving operation shall be listed to include pile and driving equipment data, final pile bearing, elevation of pile tip when plan bearing was obtained, final pile tip elevation, penetration into the ground, and pile driving analysis or wave evaluation analysis program data. This information shall be entered on each footing or bent sheet, or be included as a new sheet inserted immediately following the pertinent footing or bent sheet.

c. If any structure has drilled shaft foundations, information concerning the installation of the shaft shall be listed to include the drilled shaft report. This information shall be entered on each footing or bent sheet, or be included as a new sheet inserted immediately following the pertinent footing or bent sheet.

d. The final location of all existing and relocated utility lines and electrical conduit lines & structures that are within the Project Right-of-Way.

e. The final location of all pipes, culverts, and drainage structures.

f. All shop drawings in hard copy and TIFF format.

4. Submission Requirements. Record drawings shall be submitted as follows:

a. Roadway Drawings: two full size (36 inch x 22 inch) on bond paper.

b. Bridge Drawings: one full size (36 inch X 22 inch) on mylar.

c. One half-scale (Roadway and Bridge) (18” x 11”) bond paper copy and one copy on compact disc in a format acceptable to MDOT. The levels and symbology of the record CADD drawings shall conform to MDOT standard levels and symbology used to develop the design drawings for the Project.

2.3 Project Management

The Contractor shall be responsible for ensuring that the Project is constructed in conformance with the Contract, all referenced documents and specifications, and applicable Laws.

The Contractor shall provide Project management services sufficient to supervise the activities of its subcontractors. The Contractor shall provide a sufficient number of persons on Site to provide for the construction management of the Project.

Without relieving the Contractor of any of its responsibilities under the Contract, the Project Director or an approved designee must be present on Site, or within close proximity, fulltime as the Work is performed, have full authority to make the final decisions on behalf of the Contractor and have responsibility for communicating these decisions directly to MDOT.

Without relieving the Contractor of any of its responsibilities under the Contract, MDOT will provide representatives assigned to the Project to monitor the Project progress and provide necessary coordination between MDOT and the Contractor. MDOT and Federal Highway Administration (FHWA) representatives will have full and complete access to the Project, the Work in progress, the Daily Diaries, and to other technical documents and Project records associated with design, construction, materials, quality control, materials installation, and testing. MDOT representatives shall be given seventy-two (72) hours advance notice and have the opportunity to participate in any meetings that may be held concerning the Project or the relationship between the Contractor and their consultants and subcontractors when such meetings are associated with technical matters, progress, or quality of the Project. As used in this paragraph, “notice” shall require actual written notice to the Engineer.

All correspondence to MDOT from the Contractor shall be accompanied by a transmittal using a sequential document number. Each transmittal will be addressed to the Engineer and will list the Project name and Project number. This will be followed by a subject reference that will be used as the document name. All correspondence is to be signed by the Project Director. Any other form of correspondence will not be considered as binding. Emails to various team members will also be entered into document control, but will not be considered as official correspondence for purposes of direction unless backed up with a signed hard copy.

The Contractor shall provide a monthly status report with the monthly pay estimate, on all design submittals, Requests for Information and Requests for Revision.

2.4 Key Personnel

The Contractor shall maintain a directory of Key Personnel and contact numbers and shall provide at least one copy to MDOT and maintain a copy on-site. Key Personnel will include:

1. Project Director - The Project Director shall be the primary person in charge of and responsible for delivery of the Project in accordance with the contract requirements. The Project Director or an approved designee must be present on site fulltime as the work is performed, have full

authority to make the final decisions on behalf of the Contractor and have responsibility for communicating these decisions directly to MDOT.

2. Lead Design Engineer – The Lead Design Engineer shall be a licensed Professional Engineer and in charge of and responsible for all aspects of the design of the Project (road, bridge, hydrology, and geotechnical).

3. Construction Manager – The Construction Manager reports directly to the Project Director and shall be responsible for the overall coordination of the Project including design and construction.

4. Environmental Manager – The Environmental Manager shall be responsible for adherence to all environmental requirements and commitments, including but not limited to erosion control inspections as required by the National Pollutant Discharge Elimination System (NPDES), the terms of the Categorical Exclusion, if any, and other environmental rules and regulations.

5. Quality Control Manager – The Quality Control Manager shall be a licensed Professional Engineer and shall be responsible for assuring that the design, all workmanship and materials, inspections and testing are in compliance with the Contract requirements. The Quality Control Manager shall report directly to the Project Director.

The Contractor shall not change or substitute any such Key Personnel except due to retirement, death, disability, incapacity or voluntary or involuntary termination of employment, or as otherwise approved by MDOT.

In order to obtain MDOT approval of a change to Key Personnel, a written request shall be delivered to MDOT's Authorized Representative. The request shall include:

1. The nature of the desired change;

2. The reason for the desired change;

3. A statement of how the desired change will meet the required qualifications for the position/responsibility; and

4. A description of how the modification is proposed to be made.

No such modification will be made without prior written approval from MDOT.

2.5 Deliverables

At a minimum, the Contractor shall submit the following to MDOT:

Deliverable	Review and Comment	Schedule	Reference Section
Governmental Approvals and Permits		Seven (7) days after any correspondence is sent or received	II.D.2 of Section 902
Monthly Status Report		Montly	2.3

Request For Information

Detailed, RFIs Grouped by RFI Number

MDOT I-55 Bridge Widening Project **Project No. IM-0055-01(097)/105877301**

Request for Information #: _____ Date _____

Answer Company	Answered By	Author Company	Authored By
Designer	Designer Name	Contractor Name	PM Name

Subject	Discipline
Subject Title	Engineering Category

Importance	Category
Level	Contractor Information

CC: Company Name	Contact Name	Copies	Notes
Company Name	Name	No.	Special Handling
Company Name	Name	No.	Special Handling

Information Requested	Date Required: _____
Description of Information Request	

Suggestion

Response

Answered By _____ **Date** _____

Name and Company Date

3.0 QUALITY CONTROL/QUALITY ASSURANCE (QC/QA)

The Contractor shall prepare and submit a Design Quality Control Plan and a Construction Quality Control Plan.

3.1 Design Quality Control Requirements

The Contractor shall prepare and submit for MDOT's review and approval a Design Quality Control Plan (DQCP) for the Work. The DQCP shall be submitted to MDOT within seven (7) days from issuance of Notice to Proceed (NTP). The DQCP shall contain complete procedures for the implementation of the DQCP. The DQCP shall include the requirements specified below. No submittal for design review shall be made to MDOT until the applicable sections of the DQCP have been approved by MDOT.

1. Design Quality Control Manager: The Design Quality Control Manager's responsibilities shall be limited to administering contracts with the independent firms, managing and ensuring Contractor compliance with the DQCP, resolution of quality related issues and certifying submittals comply with the Design Quality Control Plan. Note: These responsibilities cannot be delegated to another person.

2. Documentation: The Contractor shall maintain records of all independent checking of calculations and independent plan checking performed. These records shall be under the physical control of the Design Quality Control Manager in a form acceptable to MDOT. Bridge design and checking shall be completed in accordance with MDOT's policies.

3. Reporting Functions: The Design Quality Control Manager shall furnish to MDOT a monthly quality report. This monthly report shall include, as a minimum:

    - Summary of QC activities during the month; and
    - Quality problems and resolutions.

3.2 Construction Quality Control Requirements

The Contractor shall be responsible for the items listed below. Construction Work shall not commence until the Contractor has met these requirements.

1. Construction Quality Control Plan (CQCP): The Contractor shall submit a CQCP that outlines how the Contractor shall assure that the materials and Work are in compliance with the Contract Documents. The initial CQCP shall be submitted to MDOT for review and approval at least thirty (30) days prior to the beginning of construction.. The CQCP shall be updated as necessary prior to the start of any specific construction operation. The CQCP shall include a list of personnel responsible for management and quality control of the Project, and define the authority of each individual. The plan shall also include how the Contractor will monitor quality and deal with failing materials.

2. Construction Quality Control Manager: The Construction Quality Control Manager's responsibilities shall be limited to managing and ensuring Contractor compliance with the CQCP and Contract documents, and resolution of quality related issues.

3. Personnel. The Contractor shall provide a sufficient number of qualified personnel to adequately control the quality of the construction of the Project. The QC personnel responsible for quality control acceptance shall not be employees of the Contractor. All personnel responsible for obtaining samples or conducting material testing shall be certified or adequately trained and qualified through the appropriate MDOT certification programs. Training, qualification, and/or certification shall include classroom training, written testing, documented demonstration of proper inspection, sampling and testing procedures, and an on-the-job training period. The Contractor shall provide MDOT with copies of each individual's training, qualifications, and/or certifications, in resume form, for review by MDOT. QC staff, including the inspectors and material testers, shall thoroughly monitor the Work in progress at all times.

4. Contractor Inspection: The Contractor is required to conduct Quality Control inspections of the Work. The purpose of these inspections is to verify that all the Work is being constructed in accordance with the Contract plans and specifications.

5. Contractor Testing: The Contractor is required to conduct Quality Control sampling and testing in accordance with Mississippi Standard Specifications for Road and Bridge Construction, MDOT Materials Division Inspection, Testing and Certification Manual, and MDOT Special Provisions for all portions of the Work. The cost of these activities will be borne by the Contractor.

   Requirements for fabrication and inspection of structural steel components are located in Subsection 15.4.3 Structural Steel Fabrication and the Mississippi Standard Specifications for Road and Bridge Construction.

6. Testing Laboratories: Quality Control laboratories must be approved by MDOT at least thirty (30) days prior to beginning the portion of Work for which the laboratory will be performing the testing.

7. Mix Designs: Copies of all initial hot-mix asphalt mix designs and Portland cement concrete mix designs, along with supporting data, shall be submitted to MDOT for review and comment at least thirty (30) days prior to use. All hot-mix asphalt mix designs shall be prepared by a Certified Mixture Design Technician (CMDT). The Portland cement concrete mix designs shall be prepared by a MDOT Class III Concrete Mix Design Technician. Portland Cement Concrete mix proportions given in the Mississippi Standard Specifications for Road and Bridge Construction are to be followed. The Contractor shall design the mix to obtain the minimum strength and water/cement ratios given in Table 3 of Section 804 of Mississippi Standard Specifications for Road and Bridge Construction, and to provide workability, air content, gradation and suitable set times set forth therein. MDOT will be notified of any revisions to the Contractor's mix design. Copies of such revisions will be sent to MDOT for review and comment at least fourteen (14) days prior to use.

8. Documentation: The Contractor shall maintain current daily records of all quality control operations performed. These records shall be in a form acceptable to MDOT and include a description of subcontractors and suppliers working on the Project, the number of personnel working, the weather conditions encountered, any delays encountered, identification of Nonconforming Work, and corrective action taken on current and previous Nonconforming Work. In addition, these records shall include factual evidence that the required quality control activities, including material testing and inspection, have been performed, including but not limited to the following:

- Type and number of QC tests performed;
- Results of QC tests;
- Material Certifications;
- Inspections performed and findings;
- Nonconforming Work identified;
- Proposed action items to address Nonconforming Work; and
- Corrective actions taken.

Such records shall address both conforming and Nonconforming Work and shall include a signed statement that all supplies and materials not identified as Nonconforming Work incorporated into the Work fully comply will all requirements of the RFC documents and the Contract. Complete, legible copies of such records shall be furnished in full to MDOT within seven (7) days of the date of the daily record.

9. Materials Certification: The Construction Quality Control Manager will be responsible for documenting, preparing and certifying that all materials meet specifications and for issuing the Statement of Estimated Final Quantities and Certified Test of Materials (TMD-725).

10. Reporting Functions: In addition to the daily reports requirements, the Contractor shall furnish to MDOT a monthly quality report. This monthly report shall include as a minimum:

    - Summary of QC staff on site during the month;
    - Summary of QC activities during the month;
    - Detailed summary of all tests performed by category;
    - Trend analysis of QC test results;
    - Log of all outstanding unresolved failing tests;
    - Nonconforming Work, proposed action items, and corrective actions taken;
    - Quality problems and resolutions; and
    - Summary of certificates of compliance.

    Nonconforming Work: The Contractor shall identify to MDOT all Nonconforming Work. Nonconforming Work shall be evaluated in accordance with Subsection 907-106.10 of the Special Provisions. Nonconforming work shall be reported to MDOT on a Nonconforming work Report (NCR).

    The NCR process shall generally conform to the following:

    - Problem Identification

      The QC Manager should document a nonconformance with NCR form attached. The NCR form should be copied to the Contractor, the Engineer of Record and MDOT and any MDOT designee.

    - Proposed Corrective Action

      - The Engineer of Record and the Contractor shall propose corrective action to address the NCR. The Contractor and Engineer of Record may solicit MDOT input on the proposed action.

- If the Engineer of Record's recommendation is to keep the nonconforming work in place or modify the nonconforming work, calculations supporting the recommendations shall be provided with the NCR at the time the NCR is provided to MDOT for concurrence.
- The Engineer of Record shall forward the proposed Corrective Action to MDOT and any designee for concurrence or rejection.
- MDOT will send either the NCR concurrence or rejection to the Contractor, Engineer of Record and the QC Manager.

- Corrective Action

  The Contractor shall complete the required Corrective Action in accordance with the NCR.

- Close Out

  - The QC Manager shall witness the corrective action and will record completion and date on the NCR form.
  - MDOT or its designee will sign the complete NCR.
  - All NCR's will be recorded and a summary of status provided monthly. All NCR's must be resolved prior to project closeout.

The NCR shall use the attached form or similar document.

11. The Contractor shall address corrective actions for Nonconforming Work within 14 days of notice of nonconformity. The Contractor shall resolve corrective actions for Nonconforming Work within 60 days of notice of nonconformity.

12. The Project shall not be opened to traffic until Nonconforming Work is removed and replaced, reworked, or repaired to MDOT's satisfaction.

3.3 Procedures for Construction Quality Control

The Contractor shall use MDOT-established procedures for inspection and material testing to assess the quality of all Work and to ensure the quality of all Work meets the quality levels required by the RFC documents and the Contract. The procedures shall apply to all facets of procurement and construction. The procedures shall be implemented by the Contractor as CQCP Procedures. The procedures shall completely describe all quality control functions including all activities to be performed and shall contain information as specified herein or required by MDOT. The procedures shall utilize current MDOT publications, including but not limited to, the Materials Division Inspection, Certification and Testing Manual. The Contractor shall make the revisions necessary to satisfy MDOT's comments and resubmit within seven (7) days for MDOT's review. The Contractor may not make any changes to the procedures after the review process is completed without repeating the submission and review process.

The portion of the procedures for construction shall include at a minimum:

1. A description of the QC organization, including an organization chart showing lines of authority and relationships to other company organizational elements.

2. The names, qualifications, resume, duties, responsibilities, and authorities of each person assigned a QC function.

3. Procedures for preparing, reviewing and presenting submittals, including those of subcontractors, off-site fabricators and suppliers, for assuring they conform to Contract requirements.

4. For each individual RFC Package the specific tests and or certifications required, minimum frequency of tests, and test procedures shall be in accordance with MDOT SOP TMD 20-04-00-000.

3.4 MDOT's Construction Quality Assurance

MDOT will perform or cause to be performed Quality Assurance Testing and Inspection independent of the Contractor's Quality Control.

All sampling and testing will be in accordance with existing AASHTO, ASTM, or test methods used by MDOT. The Contractor shall cooperate with MDOT to allow the necessary testing to be conducted prior to proceeding to the next operation.

In addition, MDOT may perform additional tests to ensure that proper sampling and testing procedures are being followed and that testing equipment is functioning properly. This testing may consist of observing Contractor and MDOT personnel, as well as taking split samples for the purposes of comparison testing.

Sampling frequency shall be as defined in the MDOT Standard Operating Procedure TMD 20-04-00-0000.

3.5 Uncovering, Removal and Correction of Work

MDOT reserves the right to direct the Contractor to remove and/or uncover portions of the Work for examination. After examination by MDOT, the Contractor shall restore the Work to the standard required by the RFC documents and the Contract. Should exposed Work fail to meet such standards, the Contractor shall continue exposing Work until the extent of the Nonconforming Work has been determined to MDOT's satisfaction and then shall remove all such Nonconforming Work in its entirety and correctly replace the same. All costs associated with the removal and/or uncovering portions of the Work for examination, further removal if required, and restoring Work shall be at the Contractor's expense. If the Work thus exposed or examined conforms to the requirements of this Contract, uncovering, removing and restoring the Work will be paid for by MDOT. If the Work exposed or examined is Nonconforming Work, uncovering, removing and restoring the Work shall be at Contractor's expense. No additional time will be allowed for any uncovering, removing and restoring of the Work. The fact that MDOT does not discover the Nonconforming Work shall not constitute an acceptance of such Nonconforming Work.

3.6 Additional Testing

MDOT retains the right, but not the obligation, to direct the location and timing of additional testing to be performed at the Contractor's expense. This additional testing shall be recorded as Owner Directed Testing (ODT) and such testing shall be in addition to that required by the CQCP. Such additional testing shall not be used by the Contractor to meet the minimum frequencies required by the CQCP. ODT shall

be performed as soon as practical after direction by MDOT. If, after MDOT request for an ODT, Contractor performs work which makes the ODT more difficult or expensive, removal and subsequent replacement of Work to allow for testing where directed shall be solely at the Contractor's expense.

3.7 MDOT Inspection and Testing

All materials and every part of the Work shall be subject to MDOT's Quality Assurance inspection and testing, as well as independent assurance testing by MDOT. MDOT, FHWA and all duly Authorized Representatives shall be allowed access to all parts of the Work and shall be furnished with information and assistance by the Contractor, as required, to make complete and detailed inspections and to do any testing that such representatives deem appropriate. All inspections and all tests conducted by MDOT and/or its duly authorized representatives are for the convenience and benefit of MDOT. These inspections and tests do not constitute acceptance of the materials or Work tested or inspected. MDOT may reject or accept any Work or materials at any time prior to any Final Acceptance Date whether or not previous inspections or tests were conducted by MDOT or its duly Authorized Representatives.

3.8 Independent Assurance Testing

MDOT personnel assigned to this Project or qualified personnel retained by MDOT will conduct sampling and testing, separate from the Contractor's testing. The minimum number of sampling and testing shall be at the frequencies set forth in the Mississippi Standard Specifications for Road and Bridge Construction, Standard Operating Procedures (SOP) and Materials Division Inspection, Testing, and Certification Manual and the Contract. All sampling and testing will be in accordance with existing AASHTO, ASTM, or test methods used by MDOT. This testing will be used to ensure that proper sampling and testing procedures are being followed, that testing equipment is functioning properly, and to give to MDOT assurances that the materials used by the Contractor meet the plans and specifications. This testing may consist of observing sampling and testing by the Contractor personnel. It may also consist of taking split samples for the purposes of comparison testing. Independent Assurance test results will not be used for acceptance.

3.9 Contractor's Obligation

MDOT's testing in no way relieves the Contractor of its obligation to comply with the Contract requirements. All materials incorporated into the Project shall meet or exceed Contract requirements and specifications. Further, any testing by MDOT will not relieve Contractor of any of its warranty obligations.

3.10 Deliverables

At a minimum, the Contractor shall submit the following to MDOT for review or comments:

Deliverable	Review and Approve	Schedule	Reference Section
Design Quality Control Plan		Seven (7) days following NTP	3.1
Construction Quality Control Plan (CQCP)		Thirty (30) days Prior to Construction	3.2
Monthly Design and Construction Quality Reports		Monthly	3.2

Contractor's Name
Project Location:
Project No.:

NONCONFORMANCE REPORT

1. NCR No.:	2. (Sub)Contractor/Supplier:	3. Originator & Organization:	4. Date:
5. Location:	6. Void: (Not Used) N/A	7. Specification Section & Drawing No.:	
8. Contract Requirement:			
9. Nonconformance Description:			
10. Date verified/indexed by QC Manager:	11. Reply requested from:	12. Need Date:	
13. Proposed Corrective Action:			
14. Proposed Recurrence Prevention:			
15. Disposition status: ☐ **Reject/Replace** ☐ **Rework** ☐ **Repair**(requires procedure) ☐ **Use-As-Is** (requires technical justification)			
Prepared by: 16. Contractor Designee / Date		Prepared by: 17. Construction QC Manager or Designee Signature / Date	
18. QA Manager has reviewed the above and accepts the NCR proposed disposition and/or corrective measures. Print Name / Signature / Date			
19. Verification that Corrective Action is Complete: (Ref. QC Oversight Inspection Report #) Construction QC Manager / Date		20. NCR Officially Closed: Project Quality Assurance Manager / Date	

Email Distribution to: Project Manager (MDOT), Inspector (URS), Project Manager (URS)

4.0 Not Used

5.0 ENVIRONMENTAL COMPLIANCE

5.1 Compliance with Environmental Commitments

The Contractor shall comply with all environmental commitments and requirements in the NEPA Approval including, but not limited to, the following:

1. The provisions of all environmental permits applicable to the Project, including any restrictions and agreements specifically agreed to or entered into by MDOT in obtaining permits for the Project.

2. Those stipulations and conditions under which the MTC and/or MDOT received the NEPA Approval and any modifications resulting from the re-evaluation of the document.

3. Applicable Laws and regulations relating to potential or actual Hazardous Material that may be encountered in the course of carrying out the Contract.

4. Carrying out all necessary social, economic and environmental studies required by regulatory authorities in the course of the construction.

5. Updating or extending approved permits obtained by the Contractor.

5.2 Design Phase

All plans and designs are to be prepared in accordance with all of the environmental commitments/requirements outlined in the Special Provisions and Notice to Bidders of this Contract and all environmental commitments in the NEPA Approval. The Lead Design Engineer shall assure MDOT that all plans and designs have been prepared in accordance with all of the environmental commitments/requirements by certified letter at the RFC submittal.

5.3 Preconstruction Conference(s)

The Contractor shall conduct one (or more, if appropriate) pre-construction conference(s) prior to any construction activity to discuss environmental and permitting issues, which conference shall include all subcontractors, and to the extent feasible, representatives from the U.S. Army Corp of Engineers, the Mississippi Department of Natural Resources, the Mississippi Department of Environmental Quality, the FHWA, the Contractor, MDOT, and others as deemed necessary.

5.4 Construction Phase(s)

The Contractor shall be responsible for compliance with all of the environmental commitments/requirements outlined in the Special Provisions and Notice to Proposers as provided in environmental commitments contained within the NEPA Approval. The commitments/requirements shall be complied with during all phases of the construction activities. Upon completion of the Construction Work, the Contractor shall certify that all construction activities have complied with all of the environmental commitments/requirements. MDOT will have the authority to suspend all Work for non-compliance with the environmental commitments/requirements.

5.5 Protection of Archeological and Paleontological Remains and Materials

1. If archeological or paleontological remains are uncovered, the Contractor shall immediately halt operation in the area of the discovery and notify MDOT.

2. Archeological remains consist of any materials made or altered by man which remain from historic or prehistoric times (*i.e.* older than 50 years). Examples include old pottery fragments, metal, wood, arrowheads, stone implements or tools, human burials, historic docks, structures or not recent (*i.e.* older than 100 years) vessel ruins. Paleontological remains consist of old animal remains, original or fossilized, such as teeth, tusks, bone, or entire skeletons.

3. MDOT will have the authority to suspend the Work for the purpose of preserving, documenting, and recovering the remains and materials of archeological and paleontological importance for the State. The Contractor shall carry out all instructions of MDOT for the protection of archeological or paleontological remains, including steps to protect the Site from vandalism and unauthorized investigations, from accidental damage and from dangers such as heavy rainfall or runoff.

5.6 Wetlands and Water Quality Mitigation

1. The Contractor shall fulfill the terms and conditions of both the Clean Water Act Section 404 permit and the Section 401 Water Quality Certification, as required by the U.S. Army Corps of Engineers and the Mississippi Department of Natural Resources, respectively. The Contractor shall be responsible for all stream and/or wetland mitigation required to fulfill the permitting requirements.

2. The Contractor shall maintain the natural low flow characteristics of all stream crossings, including temporary crossings as required in the approved permits.

3. The Contractor shall provide the following list of deliverable items when applicable:

   - Wetland and stream mitigation engineering drawings;
   - Constructed wetland and stream mitigation that meets standards of regulating agencies;
   - Copy of permit applications;
   - Copy of approved permits; and
   - Certificate of completed mitigation.

5.7 Regulatory Compliance

The Contractor shall be responsible for all fines and penalties that may be assessed by an agency with jurisdiction in connection with the Contractor's failure to comply with applicable Environmental Laws or Environmental Approvals. Further, it shall be the Contractor’s responsibility to correct, at its own expense, any violations caused by the Contractor. Immediately upon receiving a written notice of violation or similar notification, the Contractor shall notify MDOT and provide all correspondence and details of the resolution of these warnings and/or violations.

5.8 Hazardous Material

5.8.1 Survey and Strategy for Remediation

The Contractor, using a licensed Environmental Consulting Firm, shall perform a survey(s) to identify and determine the extent of and develop a strategy for the remediation of Hazardous substances, wastes, or chemicals on the Project. The Contractor shall furnish MDOT a copy of the survey results and remediation plan and obtain MDOT approval. This approval shall be obtained before the Contractor commences construction activities.

5.8.2 Contractor Responsibilities

The Contractor is responsible for handling, storage, remediation, or disposal of any materials, wastes, substances and chemicals deemed to be hazardous under applicable state of federal law, (hereinafter "Hazardous Substances") encountered at the site which were known or should have been known at the time of submission of the remediation plan or introduced to the site by the Contractor or any of its agents. Upon encountering any Hazardous Substances, the Contractor shall stop Work immediately in the affected area and duly notify MDOT and, if required by state or federal law, all government or quasi-government entities with jurisdiction over the Project or site.

5.8.3 Commission Responsibilities

Upon receiving notice of unidentified Hazardous Substances, the Commission will take necessary measures required to ensure that the Hazardous Substances are remediated or rendered harmless. Such necessary measures will include the Commission either (i) retaining qualified independent firm or (ii) negotiating a supplemental agreement with the Contractor.

5.8.4 Resuming Work

The Contractor shall resume Work at the affected area of the Project only after written notice from MDOT in the case of Hazardous Substances unidentified in the remediation plan that the (i) Hazardous Substances have been removed or rendered harmless and (ii) all necessary approvals have been obtained from all government and quasi-government entities having jurisdiction over the Project.

5.8.5 Contract Price

The survey, remediation plan, and work required under the remediation plan shall be included in the Contract Price.

5.8.6 Contractor's Hazardous Materials

The Contractor is responsible for Hazardous Materials actually brought to the Project by Contractor, Contractor's design consultants, subcontractors and suppliers or anyone for whose acts they may be or are liable. The Contractor is responsible for negligent or willful acts by the Contract, Contractor's design consultants, subcontractors and suppliers or anyone for whose acts they may be responsible or are liable relating to Hazardous Substances found at the site.

5.9 Deliverables

The Contractor shall provide the following list of deliverable items:

Deliverables	Review and Comment	Schedule	Reference Section
Wetland and stream mitigation engineering drawings		With final design plan submittal	5.6
Copy of Permit Applications		When Permit is submitted	5.6
Copy of Approved Permits		When Permit is approved	5.6
Certification of Completed Mitigation		When Certificate is received	5.6

6.0 Not Used

7.0 UTILITIES

7.1 Commission's Responsibilities

The Commission has no utility relocation responsibility for this Contract.

7.2 Contractor's Responsibility

As part of the Project Scope, the Contractor shall have the responsibility of coordinating the Project construction with all utilities that may be affected as listed in Notice to Proposers 2382 DB. The Contractor shall be responsible for identifying the utility affected, coordinating an appropriate relocation, and shall use either the utility's own forces to complete the work or shall complete the work utilizing a contractor approved by the utility. The Contractor will be responsible for management and coordination of any utility relocation, including the submission of new or revised permit application(s). Contractor shall include the cost of utility management in his lump sum Contract Price.

Should the Contractor encounter a utility not listed in Notice to Proposers 2382 DB, the Contractor shall notify Commission in writing immediately. The contractor shall then prepare a cost estimate in the form of utility agreement and submit the cost estimates to MDOT for review and approval by MDOT prior to work commencing on any relocation. Relocation of any utility not listed in Notice to Proposers 2382 DB shall be considered Extra Work. For those utilities requiring relocation, the Contractor shall conform with Commission's "A Policy for Accommodating Utilities on Highway Rights of Way" and the Code of Federal Regulations, Title 23, Chapter 1, Subchapter G, part 645, subparts A and B.

7.3 Resolution of Conflicts

The resolution of any conflicts between utility companies and the construction of the Project shall be the responsibility of the Contractor. No additional compensation (time or dollars) will be allowed for any delays, inconveniences, damage sustained by Contractor or its subcontractors due to interference from utilities or the operation of relocating utilities for those utilities listed in Notice to Proposers 2382 DB. If the Contractor experiences delays with the Utility companies, MDOT shall be promptly notified and will cooperate and assist with reasonable requests from the Contractor in resolving the disputes between the parties.

7.4 Utility Avoidance and Losses

The Contractor shall design the Project to avoid conflicts with utilities where possible, and minimize impacts where conflicts cannot be avoided. Contractor will be responsible for all wastewater discharges and for water loss that occur in association with construction within the right-of-way during the term of the Contract.

7.5 Parallel Service

Contractor will maintain parallel service through out any utility relocation construction. Contractor will ensure that major service interruptions are avoided.

7.6 Coordination

The Contractor shall initiate early coordination with all affected utilities and provide the utility companies with design plans for their use in developing Relocation Sketches as soon as the plans have reached a level of completeness adequate to allow the companies to fully understand the Project impacts. If a party other than the utility company prepares Relocation Sketches, there shall be a concurrence box on the plans where the utility company signs and accepts the Relocation Sketches as shown.

7.7 Documentation

The Contractor shall be responsible for collecting and submitting to Commission the following from each utility company that is located within the Project limits:

1. New or revised permit application(s) for relocation;
2. Relocation Sketches;
3. Utility Agreements including cost estimate and relocation plans for all affected utilities in accordance with the terms of the executed MOA's;
4. Letters of "no conflict" where the company's facilities will not be impacted by the Project.

The Contractor shall assemble the information included in the Utility Agreements and Relocation Sketches in a final and complete form and in such a manner that MDOT may approve the submittals with minimal review. The Contractor shall ensure that there are no conflicts with the proposed highway improvements, or between each of the utility companies' relocation plans. The Contractor shall not begin their relocation work until authorized in writing by MDOT.

7.8 Certification

At the time the Contractor notifies MDOT that the Project has reached Final Completion, the Contractor shall certify to MDOT that 1) all utilities have been identified 2) that the utilities have been relocated as necessary, and 3) any related claims have been satisfied or will be satisfied by the Contractor

7.9 Utility As-Builts

The Contractor shall accurately show the final location plan and profile of all utilities on the as-built drawings for the Project.

7.10 Deliverables

The Contractor shall provide the following list of deliverable items:

Deliverables	Review and Comment	Schedule	Reference Section
Permit Application(s), Utility Relocation Sketches and Utility Agreements		As available	7.7
Utility Certification		Final Completion	7.8
As-Built Drawings			7.9

8.0 RIGHT-OF-WAY

8.1 New Right-of-Way

The Project shall be designed and constructed within the existing right-of-way.

9.0 SURVEY

9.1 Project Survey Coordination

The Contractor shall designate a licensed Professional Surveyor as the responsible person in charge of all Contractor survey activities on the Project. The Contractor shall comply with the most recent and applicable Laws.

9.2 Contractor Supplied Survey

The Contractor shall survey the Project utilizing standard surveying practices as required to prepare preliminary plans, and final plans, and construct in accordance with applicable standards. The Contractor shall use the same survey line as the original plans.

9.3 Preservation of Survey Control Monuments

The Contractor shall preserve all survey control monuments and any governmental defined land corners located on or within MDOT right-of-way. The Contractor shall notify MDOT as soon as it becomes known that a monument is in a position that will interfere with new construction or with Contractor operations.

9.4 Permission to Enter Property

The Contractor shall notify property owners before entering any private property and each property owner shall be contacted by the Contractor and asked to sign the MDOT Survey Notification form. An explanation of the purpose, nature, and approximate duration of the proposed work may be given to the property owner, but personnel should refrain from outlining any plans or policies that might be misconstrued. If the landowner lives out of state or can not be physically contacted, the form should be mailed to the property owner. Contractor shall record all contacts carefully and accurately for future use. At a minimum, the record shall include the names of persons contacted, identifying them as owners or tenants, the date and time of conversation, telephone numbers and a summary of the conversation.

9.5 Right of Way Marker

The Contractor shall locate and preserve all Right-of-Way markers.

9.6 Deliverables

At a minimum, the Contractor shall submit the following to MDOT for review and comment:

Deliverable	Review and Comment	Schedule	Reference Section
None			

10.0 GEOTECHNICAL

The Contractor shall determine the need for geotechnical information and conduct investigations as necessary to complete the analyses, design and construction.

10.1 Geotechnical Design Criteria

Design criteria for minimum Factors of Safety are provided in the following tables. Geotechnical design criteria have been provided for the following typical transportation structures: Bridge Foundation (Table 10.1-1), and Bridge Approach Embankment (Table 10.1-2). All embankments along the alignment shall be designed using the following criteria for global stability of approach embankments or retaining walls. Drilled shafts shall be designed based upon a static load test. Failure criteria for static load test are provided in ASTM D1143. All miscellaneous foundation such as overhead signs and light poles shall be designed in accordance with the criteria provided in Bridge/Foundation (Table 10.1-1).

Table 10.1-1 - Bridge Foundations

Deep Foundations	**Static**
Driven Piles with Wave Equation Minimum Factor of Safety	2.75
Driven Piles with Dynamic Testing (PDA) Minimum Factor of Safety	2.50
Driven Piles with Static Load Test Minimum Factor of Safety	2.00
Drilled Shafts (Less than 48 inches in diameter) Minimum Factor of Safety	2.00
Drilled Shafts (48 inched in diameter or greater) Minimum Factor of Safety	1.50

Table 10.1-2 - Bridge Approach Embankment

Failure Mode/Design Criteria	**Static**
External Stability: Bridge side and end slopes - Minimum Factor of Safety	1.30

10.2 Ground Improvement

If ground improvement is necessary to meet the design criteria, the design methodology and construction specifications shall be in accordance with FHWA Publication No. SA-98-086R, Ground Improvement Technical Summaries, Volumes I and II. Prior to commencing ground improvement operations, the Contractor shall submit the type of ground improvement technique, the anticipated results from the improvement and the methodology for verifying the results from the improvement to MDOT for review and acceptance. A summary report of the field-testing shall be submitted documenting the effects from the ground improvement techniques and indicating if the ground improvement techniques have successfully achieved the anticipated results. The Contractor is solely responsible for the performance of the ground improvement techniques.

10.3 Geotechnical Planning Report

The Contractor shall prepare a Geotechnical Planning Report for the Project, including all Phases, and submit the Geotechnical Planning Report to MDOT within thirty (30) working days from Notice to Proceed for review and written comment. The Geotechnical Planning Report shall include a detailed method statement describing the general philosophy and methods of design and construction and the rationale for selection of the proposed construction methods for all geotechnical and foundation aspects of

the Project. The method statement shall indicate how material and design details are chosen to match selected construction methods and details, soil conditions, and groundwater environment for the Site.

The Geotechnical Planning Report shall define the engineering and design approach that will be followed in order to develop technically and environmentally acceptable and durable foundations, cut and fill slopes, retaining structures, pavement subgrades, and all geotechnical designs for the Project. The Geotechnical Planning Report shall discuss all aspects of the required geotechnical effort and design analysis.

10.4 Geotechnical Exploration

10.4.1 General

The frequency, spacing, and depth of soil test borings will depend on the anticipated variation in subsurface conditions and the type of structure to be designed. The soil borings and laboratory data included in the Exhibit 1 of Section 902 are for information only. The Contractor assumes all liability/responsibility for the interpretation and use of this data for this Project. The Contractor shall obtain soil test borings needed to meet the criteria listed below. The Contractor shall locate (station and offset and GPS coordinates) and establish ground or mud line elevation at all soil test borings. The soil test boring frequency/spacing and depth criteria indicated below are the minimum requirements. The Contractor is solely responsible for the adequacy of the geotechnical information for this Project. An electronic copy of the final boring logs completed at the time of the preliminary design submittal, shall be submitted with the preliminary Geotechnical Report to MDOT in TIFF or Microstation format.

10.4.2 Bridge Foundations

Borings shall extend to depths sufficient to define the subsurface profile for structures, subgrades and embankments, and geotechnical features. All soil test borings taken for deep foundations shall extend below the anticipated pile or drilled shaft tip elevation a minimum of twenty (20) feet. The Contractor shall test for sulfates as part of their geotechnical investigation. Where moderate to severe sulfates are found, pile concrete shall meet the current requirements in 907-701.02.2.1.

10.4.3 Retaining Walls

All retaining walls shall have one soil test boring performed at least every seventy-five (75) feet along the wall line, if the wall is within 500 feet of bridge abutments. Retaining walls more than 500 feet from the bridge abutment shall have one soil test boring performed at least every 200 feet along the wall line. All soil test borings performed by the Contractor shall extend to a depth of at least twice the height of the wall. Continuous flight auger borings are not acceptable. Undisturbed samples will be required for testing to determine the required strength design parameters and the expected differential settlement along the length of the retaining wall.

10.4.4 Embankments

The subgrade soils along all roadway alignments shall be evaluated by soil test borings performed in accordance with MDOT SOP #TMD-20-14-00-000.

10.4.5 Laboratory Testing

The Contractor shall perform laboratory soils tests of sufficient numbers and type to classify and ascertain the shear strength, conditions of stability, and consolidation characteristics of the material encountered.

10.4.6 Miscellaneous Structures

Miscellaneous structures shall have a minimum of one soil test boring performed per foundation location. All soil borings performed by the Contractor shall extend at least 10 feet below the anticipated tip elevation of the foundation.

10.4.7 Geotechnical Report

The Contractor shall prepare a preliminary and final geotechnical report for all bridges, retaining walls, roadway subgrades and embankments, concrete culverts and any other structures constructed for this Project, including the Initial Phase and any subsequent Phase. The preliminary geotechnical report shall provide the preliminary recommendations for the design of the selected foundation types, reproductions of the field boring logs and a generalized soil profile along the alignment. The final geotechnical report shall summarize subsurface soils, foundation design recommendations, laboratory testing results and provide a reproduction of the field boring logs and a generalized soil profile containing the location of all soil borings. In addition, the report shall indicate any special treatments of subgrades to be performed before paving. Each report shall be submitted to MDOT along with the final or preliminary plan submittal. The review of the report will be performed in accordance with the structure submittal plan review process. In addition, after construction of the foundations is complete, the Contractor shall provide a supplement to the report containing the actual field conditions encountered and as-built foundation data and information.

10.5 Deep Foundation Verification

The Contractor shall verify the capacity of piles to substantiate Factor of Safety of Table 10.1-1. The Contractor shall provide positive demonstration that each pile has the required bearing capacity. At a minimum one abutment pile and one interior pile shall be tested to determine the capacity and to set the driving criteria for the remaining piles. The first pile driven at an abutment or interior bent shall be the verification pile. The Contractor shall submit the pile verification results within two (2) days after the completed driving of the verification test pile.

10.6 Deliverables

At a minimum, the Contractor shall submit the following to MDOT for review and comment:

Deliverable	Review and Comment	Schedule	Reference Section
Geotechnical Planning Report		Thirty (30) days after Notice to Proceed	10.3
Preliminary Geotechnical Report		Submit with Final Design Documents	10.4.7
Pile Verification Tests		Two (2) days after pile driving	10.5
Geotechnical Report		30 days after Completion of Construction	10.4.7

11.0 SIGNING, PAVEMENT MARKING

11.1 Signing

Signage shall be designed and constructed by Contractor to include all regulatory, warning, route marker, guide and information signs, and trailblazer signs.

All regulatory, warning, route marker, guide and information signs, mounting requirements and vertical and horizontal clearances shall conform to the MUTCD and MDOT Standard Plans, and the requirements specified herein. Design and placement of signs shall consider future roadway widening.

All signs placed within Project Right-of-Way shall conform to all MDOT design policy, criteria, standards and specifications.

Sign posts and structures shall be designed and constructed in accordance with MDOT design policy, specifications and standards, and AASHTO Standard Specifications for Structural Supports for Highway Signs, Luminaries and Traffic Signals. Sign structures shall be constructed utilizing structural steel.

The Contractor's design shall address modifications to permanent signing outside the Project Right-of-Way that are made inaccurate, ineffective, confusing or unnecessary by the Project.

All existing sign panels that require modification shall be replaced with new sign panels and supports.

11.2 Pavement Marking

11.2.1 Permanent Pavement Marking

Pavement markings shall be designed in accordance with the MUTCD and MDOT Standard Drawings. The permanent pavement marking system on MDOT owned roadways shall be according to Table 11.2.1

11.2.2 Temporary Pavement Marking

Temporary Pavement markings shall be designed in accordance with the MUTCD and MDOT Standard Drawings. The temporary pavement marking system shall be according to the Mississippi Standard Specifications for Road and Bridge Construction and Roadway Design Standard Drawings.

Table 11.2.1

MDOT Pavement Marking Policy 1/4/2010

	ASPHALT			OPEN GRADED FRICTION COURSE			CONCRETE		
	ADT < 2000	ADT 2000 - 30k	ADT > 30k	ADT < 2000	ADT 2000 - 30k	ADT > 30k	ADT < 2000	ADT 2000 - 30k	ADT > 30k
EDGE LINES	Rumble Stripe Paint (waterborne or high build) or Thermoplastic	Rumble Stripe Thermoplastic	Rumble Stripe Thermoplastic (90 mils) (Double-Drop)	Paint (waterborne or high build) or Thermoplastic	Thermoplastic	Thermoplastic (90 mils) (Double-Drop)	Paint (waterborne or high build), Thermoplastic, High Performance Cold Plastic Tape or Inverted Profile Thermoplastic or approved equal	Thermoplastic (90 mils)(Double-Drop), High Performance Cold Plastic Tape or Inverted Profile Thermoplastic or approved equal	Thermoplastic (90 mils)(Double-Drop), High Performance Cold Plastic Tape or Inverted Profile Thermoplastic or approved equal
CENTERLINES & LANELINES	Paint (waterborne or high build) or Thermoplastic & RPM's	Thermoplastic & RPM's	Thermoplastic (90 mils) (Double-Drop) & RPM's	Paint (waterborne or high build) or Thermoplastic & RPM's	Thermoplastic & RPM'S	Thermoplastic (90 mils) (Double-Drop) & RPM's	Paint(waterborne or high build), Thermoplastic, High Performance Cold Plastic Tape or Inverted Profile Thermoplastic or approved equal & RPM's	Thermoplastic (90 mils)(Double-Drop)High Performance Cold Plastic Tape or Inverted Profile Thermoplastic or approved equal & RPM's	Thermoplastic (90 mils)(Double-Drop)High Performance Cold Plastic Tape or Inverted Profile Thermoplastic or approved equal & RPM's
SYMBOLS	Paint (waterborne or high build) or Thermoplastic	Thermoplastic	Thermoplastic (120 mils)	Paint (waterborne or high build) or Thermoplastic	Thermoplastic	Thermoplastic (120 mils)	Paint (waterborne or high build), Thermoplastic, High Performance Cold Plastic Tape	Thermoplastic (120 mils)(Double-Drop), High Performance Cold Plastic Tape	Thermoplastic (120 mils)(Double-Drop), High Performance Cold Plastic Tape

NOTES:

1) Rumble Strips are required on the shoulders of new concrete pavement and open graded friction courses.
2) Rumble Stripe and Rumble Strips may be omitted from residential or business areas within the corporate limits of a city, or where curb and gutter gutter is present.
3) In places where two (2) foot paved shoulders cannot be provided, Rumble Stripes and Rumble Strips will not be required.
4) The District has the option to require the Double-Drop Bead system on routes with ADT < 30k.
5) If lane widths are less than 11 feet, rumble stripe is not required.
6) The use of any product that is not listed above shall require Chief Engineer approval, otherwise options are at the discretion of the District Engineer.
7) For concrete bridges and pavements, a minimum of two (2) products shall be cometetively bid against each other if thermoplastic or paint is not used.

Larry L. Butch Brown Date
Executive Director

AA Hughes 1/19/10
Andrew Hughes Date
FHWA Division Administrator

12.0 DRAINAGE

12.1 Drainage Criteria

The Project shall include all Work for the design and construction of drainage facilities including temporary and permanent erosion control measures. Project design will be in compliance with the MDOT Roadway Design Manual, Chapter 7, incorporated in Section 17. All pipe culverts shall meet the requirements of MDOT Pipe Culvert Material Design Criteria.

The existing hydraulic opening of the bridge site shall not be reduced as a result of the new construction.

Bridge deck drainage shall be based on the FHWA Publication, Design of Bridge Deck Drainage, Hydraulic Engineering Circular No. 21 (HEC-21).

12.2 Coordination with Other Agencies

The Contractor shall coordinate all drainage issues with affected regulatory agencies that have interest or jurisdiction over the Project.

The Contractor shall copy MDOT on all correspondence, promptly advise of any direct contact and give advance notice of any meetings and/or hearings with affected regulatory agencies.

12.3 Bridges Over Waterways

For bridge widening projects, all pier locations adjacent to the channel and substructures in the widened portion shall be skewed and placed parallel to the channel. If the substructures must be placed in the channel, then they must be parallel to flow direction of flood flow.

For bridges over waterways, the low chord elevation of the exterior girder shall be above the highest of the following elevations:

1. Four (4) inches below the existing low chord elevation,
2. The High Water Elevation shown on the existing bridge plans,
3. The 100 year water surface elevation as shown in the FEMA Flood Insurance Study for FEMA regulatory floodways.

Unless specified otherwise, slope protection for the abutments and piers shall match the type and thickness of the existing protection as a minimum.

12.4 Deliverables

The Contractor shall provide the following list of deliverable items:

Deliverables	Review and Comment	Schedule	Reference Section
None			

13.0 ROADWAYS AND PAVEMENTS

13.1 Roadway Design Criteria

Project design will be in compliance with the MDOT Roadway Design Manual, freeway conditions, rolling terrain and rural setting. The design of roadways will be in accordance with Table 13.4-1. Table 2-7B of the MDOT Roadway Design Manual shall be revised as detailed in Table 13.4-1

13.2 Horizontal Alignment

The horizontal alignment shall follow the existing alignment.

13.3 Vertical Alignment

Vertical alignment shall match the existing alignment.

13.4 Earthwork and Grading

Roadway earthwork and grading design and construction will conform to the typical sections and the following specific requirements:

The minimum embankment slopes, outside of the clear zone, will be constructed using normal 3:1 slopes unless flatter slopes are determined to be necessary from the geotechnical investigation performed in accordance with MDOT SOP TMD-20-14-00-000. Embankments will be constructed with suitable material acquired from either onsite excavation or hauled from offsite borrow pits or a combination of both. Embankment material shall be placed and compacted in accordance with the contract documents.

Safety barriers shall be used to protect motorists from obstructions.

The Contractor shall perform excavation (and undercut, if necessary) of the roadway, side slopes, ditches and channels, structures, and all other items necessary for the construction of this Project. Excavation shall include all materials above the subgrade (and undercut, if required) and the disposal of all materials not suitable for re-use in construction.

The Contractor shall be responsible for locating and obtaining all borrow material required for this Project, including all approvals, permits, and fees required for obtaining and hauling the borrow material.

Grading of excavated areas, embankments and other areas disturbed by construction shall meet all erosion and sedimentation control requirements.

13.5 Pavement Selection

Pavement section shall be as described in Section 904 NTP No. 2618-D7-1 DB.

13.6 Roadway Safety

All roadway guardrail and roadside barriers shall be designed according to design speed using current MDOT standards and shall meet requirements for NCHRP 350 TL-3.All roadway pavement sections on the Project shall incorporate rumble strips along the inside and outside shoulders.

Table 13.4-1 Typical Roadway Section Criteria

	Interstates (Mainline)
Functional Classification	Freeway
Design Speed	70 mph
Control of Access	Full (type 1)
Number of Through Lanes	4
Lane Width	12 ft.
Outside Shoulder Width, Usable	12 ft.
Outside Shoulder Width, Surfaced	10 ft.
Median Shoulder Width, Usable	8 ft.
Median Shoulder Width, Surfaced	4 ft.
Auxiliary Lane Width	12 ft.
Auxiliary Lane Shoulder Width	10 ft. surfaced 12 ft. useable
Median Type	Depressed
Median Minimum Width	64 ft.
Cross Slope Travel Lane	2%
Cross Slope Shoulder	4 %
Total (Final) Bridge Minimum Width	T.W. +12ft (out)+6ft (Med)
Minimum Clear Span	
Roadside Clear Zone (Obstruction)	30 ft.
Cut Foreslope (Within Clear Zone)	6:1
Depth of Ditch	4 ft.
Cut Backslope	3:1
Safety Slope (Within clear Zone)	6:1
Fill Slope (Outside Clear Zone)	3:1
Stopping Sight Distance (AASHTO)	730 ft.
Maximum Horizontal Curve	3º 30’
Superelevation Rate	See table 3-4 A (e_{max} =0.10)
Maximum Grade	3%
Vertical Curve K Factor (Crest) (MDOT)	290
Vertical Curve K Factor (Sag) (AASHTO)	181

13.6.1 Notes for Table 13-4-1

1. The minimum vertical clearance for all bridge over highways and streets shall be 16’ – 6” or maintain the existing vertical clearance.

2. The minimum vertical clearance over railroads shall be 23’ – 6” or more if required by the railroad.

3. Horizontal Sight Distances- See Subsection 3.50 in the MDOT Roadway Design Manual for applicable criteria.

4. T.W. refers to the travel way or the total lane width.

5. Approach Roadway width is defined by the total lane width plus the total useable shoulder.

6. Horizontal clearances at railroads shall meet the requirements of AREMA and the Railroad Company.

7. Clear zone to be based upon speed, side slope and traffic volume.

8. Where auxiliary lanes are used along the mainline, clear zone is measured for the outside edge of the auxiliary lane.

9. The bridge end approach slabs shall be constructed and widened in accordance with the current MDOT Roadway Design Standard Drawings. Use Special Design Sheet BE-1A.

13.7 Deliverables

At a minimum, the Contractor shall submit the following to MDOT for review or comment:

Deliverable	Comment	Schedule	Reference Section
Preliminary Plans (30%) and Cross Sections		According to Contractor’s Schedule	2.2.2
Final Plans (100%) and Cross Sections		Prior to Request For Release for Construction	2.2.4
Release for Construction Plans and Cross Sections		According to Contractor’s Schedule	2.2.5
As Built Drawings		30 days after Completion of Construction	2.2.8

14.0 NOT USED

15.0 STRUCTURES - WIDENINGS

15.1 Design Methodology

All structural components of the Project shall be designed by the AASHTO *Standard Specifications for the Design of Highway Bridges* methodology.

15.2 Loads and Forces

The structures contained in this Project shall be proportioned for loads and forces in accordance with the latest edition of AASHTO *Standard Specifications for the Design of Highway Bridges.*

15.2.1 Live Loads

Live loads shall be calculated in accordance with AASHTO *Standard Specifications for the Design of Highway Bridges*. Vehicular live loading on the roadway of bridges or incidental structures shall be HS20-44.

15.2.2 Thermal Movement

Thermal forces shall be calculated in accordance with AASHTO Article 3.16, as specified for moderate climate regions.

a. Normal Temperature at the time of erection: 60° F
b. Design Temperature Ranges:

<u>Steel Structures:</u>
Rise: 50° F
Fall: 50° F
<u>Concrete Structures:</u>
Rise: 50° F
Fall: 50° F

c. Bridge deck joints shall be open and match the size and location of the existing bridge joints.

15.3 General Requirements for Bridges

15.3.1 Bridge Superstructures

a. All bridges on this Project shall have cast-in-place reinforced concrete bridge decks supported by precast-prestressed concrete girders, precast-prestressed post-tensioned concrete girders, or steel plate girders. In no case shall the exterior girders have less carrying capacity than an interior girder.

b. Continuity at the substructure locations of the widened portion of the bridge shall match the continuity of the existing bridge.

c. Bridge superstructures that have continuity over piers shall have the same number of girders in each span of the continuous section.

d. Stay-in-place deck forms or precast concrete deck panels shall not be used.

e. Bridge deck cross slope shall match the existing bridge cross slope.

f. The existing bridge deck may be removed only up to the outside face of the top flange of the exterior girder. At the removal line the existing concrete bridge shall be saw cut to a depth of 1 inch below the top of deck to provide a neat construction joint surface.

g. No fracture critical members, connections, or pin and link type connections are allowed.

h. Structures shall have members and details that utilize redundant load paths.

i. All steel plate girder spans shall be curved to match the horizontal curvature of the alignment. Precast-prestressed concrete girder spans shall not be utilized when the horizontal curvature of the alignment results in an offset of 10-inches or more in a span measured between the chord as defined by the straight girder and the curve.

j. All girders shall be braced immediately after erection.

15.3.2 Bridge Substructures

Bridge substructures (including abutments) shall be reinforced concrete components supported by foundations using the same type and size of the existing substructure element. New bridge piers and foundations shall be designed to resist all loads generated by the additional bridge width. This width shall be measured from the outside edge of the existing girder or web. Bridge pier caps shall be physically connected to the existing bridge when the existing superstructure is not integral with the bridge pier. For bridges where the existing superstructure is integral with the bridge pier the new diaphragm shall not be connected to the existing bridge.

.See Section 15.4.4 for pier configuration requirements.

15.3.3 Debris Removal

All portions of the bridge(s) to be removed shall be removed to a minimum of 1 foot below natural ground and shall become the property of the Contractor and removed from the site.

15.4 Bridge Design Criteria

15.4.1 Concrete Design

15.4.1.1. Reinforced Concrete

All concrete shall be designed and produced in accordance with Mississippi Standard Specifications for Road and Bridge Construction Section 804 Table 3. Cement used in concrete shall meet the requirements of Section 701 of the Mississippi Standard Specifications for Road and Bridge Construction.

Cast-in-Place Concrete:
Class AA
f'c = 4,000 psi

Drilled Shaft Concrete:
Class DS
f'c = 4,000 psi

15.4.1.2. Reinforcing Steel

a. Cast-in-place concrete shall be reinforced only with deformed bars conforming to AASHTO M31 (ASTM A 615) or A 706. Reinforcement to be welded shall conform to ASTM A 706. Reinforcing steel shall be Grade 60.

b. Cast-in-Place Concrete Clear Cover -

   i. Drilled Shafts – 6”
   ii. Footings – Bottom Mat – 4”
   iii. Footings – Top Mat – 3”
   iv. Pedestals and Columns – 3”
   v. All other reinforcing steel per AASHTO

c. At the deck, abutments, and pier cap the existing reinforcing steel shall be made continuous by the use of lap splices or mechanical couples. Mechanical couples, if used, shall be epoxy coated.

d. Mechanical couplers may not be used in any case in which the resulting clear cover over the newly installed coupler is less than 1 inch.

e. Existing bridge decks that have a clear cover of less than 1 inch shall use a non-contact lap splice.

15.4.1.3. Prestressing Steel

a. Prestressing Steel shall conform to AASHTO M 203 (ASTM A 416). Prestressing Strand shall be weldless in accordance with AASHTO 203, subsection 8.1.4.

15.4.1.4. Allowable Stress, Deflection and Strength Considerations

a. Reinforced concrete structures shall be designed by the Load Factor Design Method in accordance with AASHTO Article 8.16, Serviceability Requirements.

b. Flexural members shall be checked for serviceability in accordance with AASHTO Article 8.16.8.

c. The live load deflection of the new structure shall be within ¼ inch of the existing bridge. The bridge calculations shall provide the live load deflections for the new and existing bridge.

15.4.1.5. Special Requirements for Bridge Decks

a. The minimum bridge deck thickness shall match the existing bridge deck thickness. The cantilever overhang portions of the bridge deck shall have a minimum thickness of nine and one-fourth (9 1/4) inches.

b. Final surface texture of concrete bridge decks and bridge end pavement shall have the same finish as the existing bridge deck.

15.4.1.6. Prestressed Concrete

In the event the existing spans are continuous prestressed concrete beam spans, then the new prestressed concrete girders shall be designed as simple spans and made continuous for live load.

All concrete shall be designed and produced in accordance with Mississippi Standard Specifications for Road and Bridge Construction Section 804 Table 3. Cement used in concrete shall meet the requirements of Section 701 of the Mississippi Standard Specifications for Road and Bridge Construction.

Prestressed Concrete
Class Fx range

From a minimum of	f'c = 5,000 psi
To a maximum of	f'c = 6,000 psi

15.4.1.7. Miscellaneous Requirements and Restrictions

a. For prestressed concrete girder spans, cast-in-place concrete diaphragm(s) shall be designed and constructed to match the existing bridge diaphragm locations. The diaphragm shall be a minimum thickness of nine (9) inches and match the depth of the existing diaphragms.

b. For prestressed concrete girder spans, cast-in-place concrete diaphragm shall be located at all intermediate piers that are within the deck live load continuity. The intermediate pier diaphragms shall match the size of the existing diaphragms.

c. Cast-in-place Concrete diaphragms at the ends of prestressed concrete girders where there is a break in deck continuity shall match the size of the existing diaphragms.

d. External Post-tensioning will not be permitted.

e. All substructure caps shall have shear keys located on the cap just outside the exterior girders and shall have a minimum height of twelve (12) inches above the bottom of the exterior girder. The minimum length as measured transversely along the cap shall be twelve (12) inches and the minimum width shall be three (3) feet or two-thirds (2/3) of the cap width, whichever is greater. There shall be a one (1) inch gap between the shear key and either the face of the exterior girder or any bearing device, pad or plate supporting the exterior girder.

15.4.2 Structural Steel Design

Steel structures shall be designed in accordance with AASHTO Standard Specifications for the Design of Highway Bridges.

15.4.2.1. Materials

Structural steel for primary members shall conform to the requirements of AASHTO M 270 Grade 36, Grade 50 or Grade HPS 70W. Structural steel for secondary members shall conform to the requirements of AASHTO M 270 Grade 36 or Grade 50. Steel with a design yield strength greater than seventy (70) ksi will not be permitted. High strength bolts shall be ASTM A 325, designed for values as specified in AASHTO Subsection 6.13.2.8 with Class B contact surfaces. All field connections shall use 7/8” minimum diameter bolts. Direct tension indicators (DTIs) shall be the only acceptable method for verifying proper bolt installation.

15.4.2.2. Design and Details

a. Girders shall be I-shaped and shall be designed to act compositely with the deck slab in the positive moment region and with the reinforcing steel in the negative moment region.

b. All bolted connections shall be designed as slip critical connections having Class B contact surfaces.

c. Electroslag welding will not be permitted.

15.4.2.3. Fasteners for Steel Bridge Girders

a. High Strength Bolts shall meet the requirement of ASTM. A 325, Type 1, and shall be hot dip galvanized in accordance with the requirements of ASTM A 153, Class C Coating or galvanized by the mechanical process in accordance with the requirements of ASTM B 695, Class 50 Coating. Maximum hardness for high strength bolts shall be 33 Rockwell C (RC).

b. Nuts for high strength bolts shall be heavy hex and meet the requirements of ASTM A 563, Grade DH galvanized.

c. Hardened steel washers shall meet the requirements of ASTM F 436, galvanized.

d. Direct tension indicators shall meet the requirements of ASTM F 959 and shall be galvanized by the mechanical process meeting the requirements of ASTM B 695, Class 50 Coating.

e. Nuts for high strength bolts shall be tapped oversize the minimum amount required for proper assembly and lubricated with an acceptable lubricant containing a dye of any color that contrasts with the color of galvanizing.

f. High strength bolts, nuts, or direct tension indicators shall not be reused after tightening.

g. Mill test reports, certified test reports, and certificates of compliance are required for high strength bolts, nuts, hardened washers and direct tension indicators.

15.4.2.4. Paint System

All structural steel, except for expansion joints, and rail plates shall be painted in accordance with Section 814 of the Mississippi Standard Specifications for Road and Bridge Construction.

15.4.3 Structural Steel Fabrication Requirements

All steel plates, angles, bars, rolled shapes, finger joints and pot bearings incorporated into a bridge structure shall meet the following requirements:

All girder web plates, flange plates and splice plates shall meet the Longitudinal Charpy-V-Notch Toughness Test. The Supplementary Bend Test as described in Section 717 of the Mississippi Standard Specifications for Road and Bridge Construction is not required. Miscellaneous steel less than 1/4 inch thick shall be identified on the shop drawings. Web and flange material heat numbers shall be stenciled on each girder using low stress die stamps. The heat numbers shall be stamped on the side of the web in the upper left hand corner.

All welding shall be completed by the electric arc process and shall conform to the ANSI/AASHTO/AWS D1.5 BRIDGE WELDING CODE, and as directed herein. Certification for all welders to be used on this Project shall be submitted to the Contractor's Construction Quality Control Manager and MDOT Bridge Engineer for review. Welding machines shall have operating, properly calibrated current meters with attached calibration stickers. Run-off tabs of adequate length shall be used to help prevent weld defects at weld edges. Material surfaces for flange to web fillet welds shall be ground prior to fit-up for welding to remove all mill scale. This area includes the flange, near and far side web and the web edge.

Welded shop splices in webs and flanges are conditionally permissible and shall be submitted to the Contractor's Lead Design Engineer for approval of type and location. Welded web and flange shop splices shall not occur at concurrent locations and shall be offset a minimum of five (5) feet along the girder. Welded shop splices are prohibited in the following regions in each span:

1) Top Flange Plates in the Negative Moment Region: the region of prohibition shall begin at the centerline bearing and shall extend along the span to the lesser of twenty-five (25) feet or one tenth of the span length. In no case shall this region be less than fifteen (15) feet in length.

2) Bottom Flange Plates in the Positive Moment Region: the region of prohibition shall be the lesser of forty (40) feet or on tenth of the span length. This region shall be centered about the point of maximum positive moment. In no case shall this region be less than twenty (20) feet in length.

3) Web Plates: the region of prohibition at each end of the span shall begin at centerline bearing and shall extend along the span to the greater of fifteen (15) feet or one tenth of the span length as measured from the centerline of bearing. This region need not be greater than twenty- five (25) feet in length.

With the exception of surface condition repairs to correct undercut or overlap conditions, repairs to groove welds require an approved welding repair procedure that includes supporting documentation, size and location of the repair, Non Destructive Evaluation (NDE) reports and the Fabricator's Non-Conformance Report. Approval by the Contractor's Quality Control Manager and review by the MDOT Bridge Engineer is required prior to performing these repairs. Repairs to base metal (including flame cut edges with excessive gouges) require an approved welding repair procedure that includes supporting documentation, size and location of the repair, NDE reports and the Fabricator's Non-Conformance Report. Approval by the Contractor's Construction Quality Control Manager and review by the MDOT Bridge Engineer is required prior to performing these repairs.

The Fabricator shall have a Certified Welding Inspector (CWI) on each work shift where welding or other significant work is performed. Quality Control inspections for acceptance shall precede Quality Assurance inspections. Quality Control shop inspection records shall be made available to MDOT QA Shop Inspection Personnel.

Camber shall be checked and recorded by the Fabricator at all points shown in the approved shop drawings.

Prior to fabrication, the Fabricator and its subcontractor(s) shall determine specific inspection procedures that include techniques and acceptance standards for NDE applications for unusual or nonstandard weld geometries

Radiography of weld transitions shall be performed by placing the film on the flat side of the transition. A floating center punch shall be placed on the base metal adjacent to the weld and shall be visible on each radiographic film in the area of interest.

Prior to fabrication, the Fabricator shall have Shop Drawings approved by the Contractor's Lead Design Engineer. Also prior to fabrication, the Fabricator shall submit Welding Procedures, a Procedure for Storage and Handling of Welding Electrodes, Wire And Flux and A Flux Recovery Procedure (if applicable) to the Contractor's Lead Design Engineer for approval and for review by the MDOT Bridge Engineer. The Construction Quality Control Manager shall schedule a Pre-

Fabrication Conference at each fabrication location. The Fabricator's facilities will be inspected by the Contractor's Construction Quality Control Manager, MDOT Bridge Engineer and MDOT QA Shop Inspection personnel during the Pre-Fabrication Conference. No fabrication shall begin prior to this inspection.

Prior to fabrication, the Fabricator and/or subcontractor shall submit their NDE procedures to the Contractor's Construction Quality Control Manager and MDOT Bridge Engineer for review. The NDE procedure shall include a written practice, a method procedure for each inspection process and personnel certifications.

Breaks in fabrication shall require at least two weeks advance notification to the Contractor's Quality Control Manager and MDOT Bridge Engineer prior to restarting work.

Progressive girder assembly using a minimum three girder laydown is permissible while shop assembling girders. Drilling of material for splice connections shall occur with all items in their proper location, including splice and shim plates. Parts shall be firmly drawn together prior to drilling.

The Fabricator shall furnish MDOT QA Shop Inspection Personnel with at least 140 square feet of floor space. Additional space shall be provided as required by MDOT Bridge Engineer. The office shall contain desks, chairs, file cabinets, telephone with long distance access, electric lights, power outlets, shelves and tables. The office shall be provided with adequate heating, ventilation and air conditioning. The office shall have access to convenient sanitary facilities with running water. The office shall be in good repair, located where there is not excessive noise and shall be used for MDOT QA Shop Inspection Personnel only. Convenient and adequate parking shall be provided.

The Fabricator shall provide MDOT QA Shop Inspection Personnel convenient access to a fax machine and a copy machine. Changes in office location or facilities shall be made only upon approval of MDOT Bridge Engineer.

15.4.4 Deep Foundation Design

All bridge foundations (including abutments) shall be constructed with deep foundations consisting of piles, drilled shafts or footings supported by piles or drilled shafts.

Piers for bridges over rivers, streams or creeks shall have pile and cap beam configuration.

Piers for bridges at grade separations shall consist of cap and columns with either piles and pile cap (footing) or drilled shafts. The minimum size of the column shall be 36 inches in diameter. The minimum number of piles supporting the pile cap (footing) shall be four (4).

Top of footings shall be no higher than the top of existing footings.

Piles or drilled shafts shall be tipped no higher than the existing pile or shaft tip elevations. Footings on bridges at grade separations shall have a minimum of two (2) feet of cover.

Deep foundations are required to extend a minimum of fifteen (15) feet below any compacted fill.

All piling shall be prestressed concrete or H-pile. For water crossing, steel H-piles, if used, shall be encased from the bottom of the pile cap to a minimum of five (5) feet below natural ground.

15.4.5 Bearings

Elastomeric bearings shall be designed in accordance with AASHTO Division I, Section 14. Natural rubber in elastomeric bearings will not be allowed. The maximum thickness of laminated elastomeric bearings shall be 2 1/2 inches. All bearings shall be designed and detailed to be replaceable by jacking while maintaining traffic.

15.4.6 Bridge Railings

All barriers shall be 32" tall, New Jersey Shape concrete barrier which meets NCHRP Report 350 TL-4 criteria. The surface of the bridge rails shall be given a spray finish in accordance with Mississippi Standard Specifications for Road and Bridge Construction, Section 804.03.19.3.2 Spray Finishes**.**

15.4.7 Expansion Joints

Expansion joints shall be provided to accommodate the movement of the bridge. Existing bridge joint armoring shall be removed, the joints saw cut to remove cracked and broken concrete, repaired with an Epoxy Mortar, and sealed with a silicone sealant.

Finger Joints shall be used when the movement rating of the expansion joints is greater than two (2) inches. The design and construction of the finger joint shall be similar to the joint plans shown at the end of this Section 15. Modular joints shall not be used. Expansion finger joints and rail plates shall be galvanized in accordance with ASTM A 123.

For normal geometry conditions, cellular or modular joints shall not be used. When present, curvature of the structure shall be considered in the design of the expansion joint. If it can be shown that expansion finger joints are not feasible for use due to excessive horizontal curvature of the structure, other joint types may be considered, when approved by MDOT.

15.4.8 Bridge Drainage

a. Bridge deck drainage shall be provided as necessary to keep the ten (10) year event for a five (5) minute interval from spreading into the travel lanes. Rainfall intensity – Duration – Frequency Curves are provided in MDOT Roadway Design Manual Figure 7-4f. Bridge deck drainage design shall be in accordance with FHWA Circular No.21, "Design of Bridge Deck Drainage" (HEC-21).

b. Bridge deck drainage shall be contained on the bridge deck prior to passing through the bridge deck drains. Bridge deck drainage shall not be allowed to pass through the railing.

c. Bridge deck drains shall extend below the bottom flange of steel girders. Where drainage scuppers and drain pipes are used, pipes shall be located inside of the exterior girder.

d. Bridge deck drains for precast-prestressed concrete girder spans may utilize drain holes with a minimum opening of three (3) inches by eight (8) inches. Drain holes shall be located adjacent to the bridge barrier.

e. No bridge deck drainage shall drain onto the railroad right-of-way or onto a roadway, sidewalk, and shoulder.

15.4.9 Cranes on Existing Bridges

Cranes may be placed on existing bridges provided that the Lead Design Engineer has determined that the existing structure can safely support the proposed crane at an inventory rating. Crane mats shall be placed over the portion of the bridge deck that the crane will cross or set up on. Contractor shall submit stamped calculations and supporting documentation to MDOT demonstrating that the existing bridge can safely carry the crane load.

Any damage to the bridge or bridge deck shall be immediately repaired by the Contractor.

15.4.10 Load Rating

The Contractor shall load rate the widened portion of all bridges. The load ratings shall be in accordance with the requirements below. A report for each Structure shall be submitted detailing the ratings for all axle configurations identified. Calculations shall be supplied to MDOT in an acceptable format.

HS20-44 Truck shall be used for the operating and inventory levels.

The following trucks shall be use to rate operating level. The axle weight for each truck and spacing is provided below:

HS-SHORT
8 kip -- 12 ft -- 20 kip -- 4 ft -- 20 kip -- 10 ft -- 16 kip -- 4 ft --16 kip
total weight = 80 kip

HS-LONG
8 kip -- 12 ft -- 20 kip -- 4 ft -- 20 kip -- 22 ft -- 16 kip -- 4 ft --16 kip
total weight = 80 kip

CONCRETE TRUCK
10 kip -- 12 ft -- 25 kip -- 4 ft -- 25 kip
total weight = 60 kip

TANDEM AXLE
20 kip -- 4 ft -- 20 kip
total weight = 40 kip

The bridge ratings shall be summarized in a table at the start of the calculations showing the critical point in the bridge for each truck.

15.4.11 Temporary Concrete Traffic Barriers

Temporary concrete traffic barriers which meet the NCHRP Report 350 TL-3 criteria shall be used on the bridge deck to separate the work area from the traffic. When the temporary concrete traffic barriers are to be placed less than eight (8) ft. from an open edge of bridge deck, the barriers shall be safely attached to the bridge deck. The bridge deck attachments shall be designed to carry the TL-3 loading. When the temporary concrete traffic barriers are removed from the bridge deck, the attachments shall be completely removed and the deck repaired with a non-shrink grout. Design calculations and plan sheets shall be submitted to MDOT for review in the Final Design Review Phase (Section 2.2.4).

15.5 Deliverables

At a minimum the Contractor shall submit the following to MDOT:

Deliverable	Review and Comment	Schedule	Reference Section
Preliminary Design		According to Contractor's Schedule	2.2.2
Final Design		Prior to RFC Submittal	2.2.4
RFC Documents		Prior to Construction of the designed portion of Project	2.2.5
As-Built Drawings and Records		30 days following Construction of the designed portion of Project	2.2.8
Rating of Widened Portion of each Bridge		30 days following Construction of the designed portion of Project	15.4.10
Temporary Concrete Traffic Barrier Details and Calculations		At the Final Design Review Phase	15.4.11

16.0 MAINTENANCE OF TRAFFIC DURING CONSTRUCTION

The Contractor shall develop and submit a Maintenance of Traffic (MOT) Plan for MDOT approval at least 30 Days prior to beginning the first phase or stage of construction at each location. The MOT Plan shall identify the Contractor's strategy to provide for the safe and efficient movement of people, goods and services through and around each location while minimizing impacts to local residents, business and commuters; its approach to developing detailed Traffic Control Plans (TCP); Contractor shall describe the MOT Plan with reasonable and measurable tasks and milestones. Contractor shall maintain two (2) eleven (11) foot lanes on all Interstate bridges and roadways except as approved by MDOT. Exceptions may be granted for the erection of bridge girders and setting of protective barriers for the construction zones.

16.1 Traffic Control Plans

The Contractor shall develop and submit Traffic Control Plans for each stage of construction on each Project Bridge that shows the Contractor's proposed construction staging and proposed traffic control devices consistent with the MOT Plan. The TCP shall be submitted for approval to MDOT three (3) days prior to construction of the Work shown in the TCP. Major revision to a TCP shall also be submitted to MDOT for its approval. The TCPs shall include, at a minimum, the following:

1. A detailed diagram showing the location of all traffic control devices.
2. An access maintenance plan for all properties requiring access during construction. The plan shall also indicate the areas where equipment will be stored and vehicles parked if within the Project Right-of-Way.
3. A plan for maintaining and controlling pedestrian, bicycle and other non-vehicular traffic.

16.2 Construction Requirements

1. The Contractor shall notify MDOT of any lane closures necessary to perform work at each location prior to instituting or changing such traffic control measures. This notification shall be submitted at least 48 hours prior to the construction. Total road closures will not be permitted
2. The Contractor shall notify MDOT of any vertical clearance reduction that provides less than 16.5' clearance, any load capacity reductions, or any width reduction that results in a restriction of less than 20' wide a minimum of 20 days prior to such restriction.
3. The Contractor shall provide a paved surface for all detours or bypasses.
4. The Contractor's placement of construction equipment, materials and vehicles shall comply with MUTCD.
5. Protective barriers for the construction zone shall be anchored to the existing bridge decks per Section 15.4.11.

16.3 Emergency Events

The Interstate system is a vital link in the evacuation of residents along the coast in the event of a Hurricane. The Contractor shall maintain two (2) eleven (11) foot lanes on the existing structures at all times. In the event of an emergency the Contractor shall assist MDOT in maintaining an open highway system. This assistance will be paid for under a Supplemental Agreement.

16.4 Deliverables

At a minimum, the Contractor shall submit the following to MDOT for review or comment:

Deliverable	Review and Comment	Schedule	Reference Section
Maintenance of Traffic Plan		30 Days prior to start of construction	16
Traffic Control Plans		At least 3 days prior to construction of the Work shown in the TCP submittal	16.1

17.0 Technical Standards, Data, Reports

The following standards, data, or reports are Contract Documents. These standards apply unless otherwise described in Sections 1-16 of the Technical Requirements. In case of conflict, the order of precedence of these documents shall be as listed in the order presented below.

Availability Legend:

- IS = Industry standard, not provided by MDOT
- PR = Provided by MDOT
- W = Available via the Internet, not provided by MDOT

Originator	Title	Availability
MDOT	Standard Specifications for Road and Bridge Construction, 2004 Edition	PR
MDOT	Stormwater Management Program	PR
MDOT	Materials Division Inspection, Testing and Certification Manual	PR
MDOT	Field Manual for Concrete	PR
MDOT	Field Manual for Hot Mix Asphalt (HMA)	PR
MDOT	Inspectors Manual	PR
MDOT	Pipe Culvert Material Design Criteria	PR
MDOT	Roadway Design Manual, 2001 Version	PR
MDOT	CADD Standards	PR
MDOT	Roadway Design Standard Drawings	PR
AASHTO	All Standards/Manuals	IS
ADA	ADA Accessibility Guidelines	IS
American Railway Engineering and Maintenance of Right-of-Way Association (AREMA)	Manual for Railway Engineering	IS
ASTM	Standards	IS

Originator	Title	Availability
Electronics Industries Alliance (EIA)	Standards	IS
FHWA	All Standards/Manuals	IS
Illuminating Engineering Society of North America	Roadway Lighting, ANSI Approved RP-8-00	IS
ISO	ISO 9000	IS
ISO	ISO 9001	IS
National Electrical Manufacturers Association (NEMA)	Standards	IS
National Fire Protection Agency (NFPA)	Life Safety Code	IS
National Fire Protection Agency (NFPA)	National Electric Code	IS
National Transportation Communications for ITS Protocol Standards (NTCIP)	Standards	IS
Telecommunications Industries Association (TIA)	All standards and publications	IS
Transportation Research Board	Highway Capacity Manual	IS
US Army Corp of Engineers	Publications	www.usace.army.mil/publications

Date _____

Mississippi Transportation Commission
Jackson, Mississippi

Sirs: The following Proposal is made on behalf of _____
_____ of _____
_____
for constructing the following designated Project(s) within the time(s) hereinafter specified.

The Specifications are the current Standard Specifications of the Mississippi Department of Transportation approved by the Federal Highway Administration, except where superseded or amended by the Special Provisions and Notice(s) to Proposers attached hereto and made a part thereof.

I (We) certify that I (we) possess a copy of said Standard and Supplemental Specifications.

Evidence of my (our) authority to submit the Proposal is hereby furnished. The Proposal is made without collusion on the part of any person, firm or corporation. I (We) certify that I (we) have carefully examined the Specifications, including the Special Provisions and Notice(s) to Proposers, herein, and have personally examined the site of the Work. On the basis of the Specifications, Special Provisions, Notice(s) to Proposers and Contract Documents, I (we) will furnish all necessary items to successfully complete the Project.

Attached hereto is a certified check, cashier's check or Proposal Guaranty Bond in the amount as required in the Advertisement (or, by law).

I (We) further propose to perform all "force account or extra work" that may be required of me (us) on the basis provided in the Specifications and to give such work my (our) personal attention in order to see that it is economically performed.

I (We) further propose to execute the attached Contract as soon as the Work is awarded to me (us), and to begin and complete the Work within the time limit(s) provided for in the Specifications and Advertisement. I (We) also propose to execute the attached Contract bond in an amount not less than one hundred (100) percent of the total of my (our) part, but also to guarantee the excellence of both workmanship and materials until the Work is finally accepted.

I (We) enclose a certified check, cashier's check or bid bond for **five percent (5%) of total price proposed** and hereby agree that in case of my (our) failure to execute the contract and furnish bond within Ten (10) days after notice of award, the amount of this check (proposal guarantee bond) will be forfeited to the State of Mississippi as liquidated damages arising out of my (our) failure to execute the contract as proposed. It is understood that in case I am (we are) not awarded the work, the check will be returned as provided in the Specifications.

Proposer acknowledges receipt of and has added to and made a part of the Proposal and Contract documents the following addendum (addenda):

ADDENDUM NO. ___DATED _____ ADDENDUM NO. ___ DATED _____
ADDENDUM NO. ___DATED _____ ADDENDUM NO.___ DATED _____
ADDENDUM NO. ___DATED _____ ADDENDUM NO.___ DATED _____
ADDENDUM NO. ___DATED _____ ADDENDUM NO.___ DATED _____

TOTAL ADDENDA: _____
(Must agree with total addenda issued prior to opening of bids)

Number Description

Respectfully Submitted,

DATE _____

_____
Contractor

BY _____
Signature

TITLE _____

ADDRESS _____

CITY, STATE, ZIP _____

PHONE _____

FAX _____

EMAIL_____

(To be filled in if a corporation)

Our corporation is chartered under the Laws of the State of _____

_____

and the names, titles and business addresses of the executives are as follows:

_____
President Address

_____
Secretary Address

_____
Treasurer Address

SECTION 905

Design Build for the bridges on I-55 in Lincoln County will be widened to improve the bridges to the current roadway standards, as per Section 904 – NTP No. 2618-D7-1 DB (Project Scope). The Work shall include:

1. I-55 over Dickerson Creek, 0.9 miles north of the Pike County Line,
2. I-55 over Bogue Chitto Road, 5.1 miles north of the Pike County Line, and
3. I-55 over Big Creek, 6.0 miles north of the Pike County Line,.

The Project shall include any additional bridges, if any, as specified in Volume 1, on Contractor's Schedule Certificate.

I (We) agree to complete the entire Project with the specified contract time specified in Contractor's Schedule Certificate.

***** SPECIAL NOTICE TO BIDDERS ******

BIDS WILL NOT BE CONSIDERED UNLESS BOTH UNIT PRICES AND ITEM TOTALS ARE ENTERED

BIDS WILL NOT BE CONSIDERED UNLESS THE BID CERTIFICATE LOCATED AT THE END OF THE BID SHEETS IS SIGNED

BID SCHEDULE

REF NO	PAY ITEM NO.	ADJ CODE	APPROX QUANTITY	UNIT	DESCRIPTION	UNIT PRICE		ITEM TOTAL	
						DOLLAR	CENT	DOLLAR	CENT
			1	Lump Sum	Design-Build for bridges on I-55 in Lincoln County, Mississippi; at locations **indicated in Volume 1 on the Contractor's Schedule Certificate**	$XXXXXXXXXXXXX	XX	$	00

TOTAL BID……..CONTRACT PRICE (NOT TO EXCEED $10,000,000.00)…….. ……$_____

COMPLETE ITEM NOS. 1, 2, AND/OR 3 AS APPROPRIATE. SEE NOTICE TO BIDDERS NO. 696 AND SUPPLEMENT.

1. I/We agree that no less than _____ percent shall be expended with small business concerns owned and controlled by socially and economically disadvantaged individuals (DBE and WBE).

2. Classification of Bidder: Small Business (DBE) _____ Small Business (WBE) _____

3. A joint venture with a Small Business (DBE/WBE): Yes _____

4. All requirements of the RFP have been included in the Total Bid.

***** SIGNATURE STATEMENT *****

BIDDER ACKNOWLEDGES THAT HE/SHE HAS CHECKED ALL ITEMS IN THIS PROPOSAL FOR ACCURACY AND CERTIFIED THAT THE FIGURES SHOWN THEREIN CONSTITUTE THEIR OFFICIAL BID.

_____
PROPOSER’S SIGNATURE

_____
PROPOSER’S COMPANY

_____
PROPOSER'S TAX ID NUMBER/DUNS NUMBER

Certification with regard to the Performance of Previous Contracts or Subcontracts subject to the Equal Opportunity Clause and the filing of Required Reports

The Proposer ____, proposed Subproposers ____, hereby certifies that it/they/he has ____, has not ____, participated in a previous contract or subcontract subject to the Equal Opportunity Clause, as required by Executive Orders 10925, 11114, or 11246, and that it has ____, has not ____, filed with the Joint Reporting Committee, the Director of the Office of Federal Contract Compliance, a Federal Government contracting or administering agency, or the former President's Committee on Equal Employment Opportunity, all reports due under the applicable filing requirements.

_____
(COMPANY)

BY _____

_____
(TITLE)

DATE: _____

NOTE: The above certification is required by the Equal Employment Opportunity Regulations of the Secretary of Labor (41 CFR 60-1.7 (b) (1)), and must be submitted by bidders and proposed subcontractors only in connection with contracts and subcontracts which are subject to the Equal Opportunity Clause. Contracts and Subcontracts which are exempt from the Equal Opportunity Clause are set forth in 41 CFR 60-1.5. (Generally only contracts or subcontracts of $10,000 or under are exempt.)

Currently, Standard Form 100 (EEO-1) is the only report required by the Executive Orders or their implementing regulations.

Proposed prime Contractors and Subcontractors who have participated in a previous contract or subcontract subject to the Executive orders and have not filed the required reports should note that 41 CFR 60-1.7 (b) (1) prevents the award of contracts and subcontracts unless such Contractors submit a report covering the delinquent period or such other period specified by the Federal Highway Administration or by the Director, Office of Federal Contract Compliance, U. S. Department of Labor.

OCR-481
Rev. 10/11/01

MISSISSIPPI DEPARTMENT OF TRANSPORTATION
OFFICE OF CIVIL RIGHTS
JACKSON, MISSISSIPPI

DISADVANTAGED BUSINESS ENTERPRISE LIST

Project No: _____ County: _____

DBE Firm: _____ ☐ Race Conscious ☐ Race Neutral

Address: _____

A	B	C
Reference Number of Items	Percent Work Subcontracted (see notes 4 & 5 below)	Value of Item (Subcontracted, Manufactured or Supplied)
TOTAL		
PERCENT OF TOTAL BID		

***** I acknowledge and commit to the items and prices stated above. *****

_____ **Signature of DBE**

_____ **Signature of Prime**

Date Received by MDOT: _____

_____ Prime Contractor

Date Approved by MDOT: _____

_____ Submitted By

Approved by: _____

_____ Title

I AGREE TO SUBCONTRACT OR PURCHASE MATERIAL FROM THE DBE FIRM LISTED ABOVE AND I MAKE THIS COMMITMENT WITH THE UNDERSTANDING THAT IF I FAIL FOR GOOD REASON TO FULFILL THIS COMMITMENT I HAVE LISTED I WILL FULFILL THE TERMS OF MY CONTRACT AS LONG AS I REACH OR EXCEED THE CONTRACT GOAL OF _____ %.

INSTRUCTIONS

1. **Submit this form to Office of Civil Rights Division no later than the tenth calendar day after the opening of the bids.**
2. **60% credit is allowed toward the DBE goal for suppliers.**
3. **The actual subcontract agreement must equal or exceed the dollar amount shown in Column "C".**
4. **If the DBE firm performs "All of the work" pertaining to a subcontracted item, enter 100% in Column "B".**
5. **If the DBE firm performs "A portion of the work" pertaining to a subcontracted item, the percentage is calculated based on the total value of the item and entered in Column "B". A breakdown of the cost must accompany this situation.**

MISSISSIPPI DEPARTMENT OF TRANSPORTATION

DEBARMENT

CERTIFICATION
(Execute in duplicate)

State of Mississippi

County of _____

I,_____,
(Name of person signing certification)

individually, and in my capacity as _____of
(Title)

_____ do hereby certify under
(Name of Firm, Partnership, or Corporation)

penalty of perjury under the laws of the United States and the State of Mississippi that _____

_____, Proposer
(Name of Firm, Partnership, or Corporation)

on Project No. _____,

in _____ County(ies), Mississippi, has not either directly or indirectly entered into any agreement, participated in any collusion; or otherwise taken any action in restraint of free competitive proposing in connection with this contract; nor have any of its corporate officers or principal owners.

Except as noted hereafter, it is further certified that said legal entity and its corporate officers, principal owners, managers, auditors and others in a position of administering federal funds:

a) Are not presently debarred, suspended, proposed for debarment, declared ineligible, or voluntarily excluded from covered transactions by any Federal department or agency;

b) Have not within a three-year period preceding this Proposal been convicted of or had a civil judgment rendered against them for commission of fraud or a criminal offense in connection with obtaining, attempting to obtain, or performing a public (Federal, State or local) transaction or contract under a public transaction; violation of Federal or State antitrust statutes or commission of embezzlement, theft, forgery, bribery, falsification or destruction of records, making false statements, or receiving stolen property;

c) Are not presently indicted for or otherwise criminally or civilly charged by a governmental entity (Federal, State or local) with commission of any of the offenses enumerated in (b) above; and

d) Have not within a three-year period preceding this application/ Proposal had one or more public transactions (Federal, State or local) terminated for cause or default.

Initial here "_____" if exceptions are attached and made a part thereof. Any exceptions shall address to whom it applies, initiating agency and dates of such action.

Note: Exceptions will not necessarily result in denial of award but will be considered in determining Proposer responsibility. Providing false information may result in criminal prosecution or administrative sanctions.

The Proposer further certifies that the certification requirements contained in Section XI of Form FHWA 1273, will be or have been included in all subcontracts, material supply agreements, purchase orders, etc. except those procurement contracts for goods or services that are expected to be less than the Federal procurement small purchase threshold fixed at 10 U.S.C. 2304(g) and 41 U.S.C. 253(g) (currently $25,000) which are excluded from the certification requirements.

The Proposer further certifies, to the best of his or her knowledge and belief, that:

1) No Federal appropriated funds have been paid or will be paid to any person for influencing or attempting to influence an officer or employee of any Federal agency, a Member of Congress, an officer or employee of Congress, or an employee of a Member of Congress in connection with the awarding of any Federal contract, the making of any Federal grant, the making of any Federal loan, the entering into of any cooperative agreement, and the extension, continuation, renewal, amendment, or modification of any Federal contract, grant, loan, or cooperative agreement.

2) If any funds other than Federal appropriated funds have been paid or will be paid to any person for influencing or attempting to influence an officer or employee of any Federal agency, a Member of Congress, an officer or employee of Congress, or an employee of a Member of Congress in connection with this contract, Standard Form-LLL, "Disclosure Form to Report Lobbying," in accordance with its instructions will be completed and submitted.

The certification contained in (1) and (2) above is a material representation of fact upon which reliance is placed and a prerequisite imposed by Section 1352, Title 31, U.S. Code prior to entering into this contract. Failure to comply shall be subject to a civil penalty of not less than $10,000 and not more than $100,000. The bidder shall include the language of the certification in all subcontracts exceeding $100,000 and all subcontractors shall certify and disclose accordingly.

All of the foregoing and attachments (when indicated) is true and correct.

Executed on _____ _____

Signature

(11/23/92F)

MISSISSIPPI DEPARTMENT OF TRANSPORTATION

DEBARMENT

CERTIFICATION
(Execute in duplicate)

State of Mississippi

County of _____

I,_____,
(Name of person signing certification)

individually, and in my capacity as _____of
(Title)

_____ do hereby certify under
(Name of Firm, Partnership, or Corporation)

penalty of perjury under the laws of the United States and the State of Mississippi that _____

_____, Proposer
(Name of Firm, Partnership, or Corporation)

on Project No. _____,

in _____ County(ies), Mississippi, has not either directly or indirectly entered into any agreement, participated in any collusion; or otherwise taken any action in restraint of free competitive proposing in connection with this contract; nor have any of its corporate officers or principal owners.

Except as noted hereafter, it is further certified that said legal entity and its corporate officers, principal owners, managers, auditors and others in a position of administering federal funds:

a) Are not presently debarred, suspended, proposed for debarment, declared ineligible, or voluntarily excluded from covered transactions by any Federal department or agency;

b) Have not within a three-year period preceding this Proposal been convicted of or had a civil judgment rendered against them for commission of fraud or a criminal offense in connection with obtaining, attempting to obtain, or performing a public (Federal, State or local) transaction or contract under a public transaction; violation of Federal or State antitrust statutes or commission of embezzlement, theft, forgery, bribery, falsification or destruction of records, making false statements, or receiving stolen property;

c) Are not presently indicted for or otherwise criminally or civilly charged by a governmental entity (Federal, State or local) with commission of any of the offenses enumerated in (b) above; and

d) Have not within a three-year period preceding this application/ Proposal had one or more public transactions (Federal, State or local) terminated for cause or default.

Initial here "_____" if exceptions are attached and made a part thereof. Any exceptions shall address to whom it applies, initiating agency and dates of such action.

Note: Exceptions will not necessarily result in denial of award but will be considered in determining Proposer responsibility. Providing false information may result in criminal prosecution or administrative sanctions.

The Proposer further certifies that the certification requirements contained in Section XI of Form FHWA 1273, will be or have been included in all subcontracts, material supply agreements, purchase orders, etc. except those procurement contracts for goods or services that are expected to be less than the Federal procurement small purchase threshold fixed at 10 U.S.C. 2304(g) and 41 U.S.C. 253(g) (currently $25,000) which are excluded from the certification requirements.

The Proposer further certifies, to the best of his or her knowledge and belief, that:

1) No Federal appropriated funds have been paid or will be paid to any person for influencing or attempting to influence an officer or employee of any Federal agency, a Member of Congress, an officer or employee of Congress, or an employee of a Member of Congress in connection with the awarding of any Federal contract, the making of any Federal grant, the making of any Federal loan, the entering into of any cooperative agreement, and the extension, continuation, renewal, amendment, or modification of any Federal contract, grant, loan, or cooperative agreement.

2) If any funds other than Federal appropriated funds have been paid or will be paid to any person for influencing or attempting to influence an officer or employee of any Federal agency, a Member of Congress, an officer or employee of Congress, or an employee of a Member of Congress in connection with this contract, Standard Form-LLL, "Disclosure Form to Report Lobbying," in accordance with its instructions will be completed and submitted.

The certification contained in (1) and (2) above is a material representation of fact upon which reliance is placed and a prerequisite imposed by Section 1352, Title 31, U.S. Code prior to entering into this contract. Failure to comply shall be subject to a civil penalty of not less than $10,000 and not more than $100,000. The bidder shall include the language of the certification in all subcontracts exceeding $100,000 and all subcontractors shall certify and disclose accordingly.

All of the foregoing and attachments (when indicated) is true and correct.

Executed on _____ _____

Signature

(11/23/92F)

CONTRACTOR'S SCHEDULE CERTIFICATE

State of _____

County of _____

_____, hereinafter denoted as CONTRACTOR, does hereby certify that it has or will obtain, the labor, material and equipment resources needed and shall perform the Work described in the Project Scope on or before the dates specified below:

Final Completion Date: Calendar Days _____ from Notice to Proceed

The Contractor does hereby propose to complete the widening of the following bridge sites:

1. I-55 over Dickerson Creek, 0.9 miles north of Pike County Line,
2. I-55 over Bogue Chitto Road, 5.1 miles north of Pike County Line, and
3. I-55 over Big Creek, 6.0 miles north of Pike County Line.

The Contractor does hereby propose to complete the following bridge sites (northbound and southbound) and all associated Work, which must be bid in consecutive order as shown below (put an "x" to indicate choice):

		Included as part of this Proposal	Not included in this Proposal
1.	I-55 over Brookway Blvd., 2.2 miles north of US 84		
2.	I-55 over Union Street, 4.6 miles north of US 84		
3.	I-55 over Bogue Chitto River, 0.2 miles north of US 84		
4.	I-55 over US 84.		

Further, CONTRACTOR hereby agrees that attainment or non-attainment of the Completion Days stated above shall be the measure of performance for the assessment of liquidated damages

Witness our signature this the _____ day of _____, 201__

_____
Contractor

Mississippi Department of Transportation

Section 902

Bridge Widening Project
I-55 Lincoln County, Mississippi

Project No. IM-0055-01(097)/105877301

April 21, 2010

TABLE OF CONTENTS

Page Number

I. CONTRACT DOCUMENTS 2

II. PROJECT SCOPE 2
A. Project Scope of Work 2

III. CONTRACT PRICE/CONTRACT PAYMENTS 3
A. Contract Price 3
B. Contract Price Adjustments 3
C. Contract Payments 4

IV. CONTRACT COMPLETION DATE AND LIQUIDATED DAMAGES 5
A. Contract Completion Date 5
B. Failure to Complete on Time and Liquidated Damages 5

V. FORCE MAJEURE 5

VI. INDEMNITY 5

VII. RECORD RETENTION 6

VIII. OWNERSHIP OF DOCUMENTS 6

IX. RELATIONSHIP OF THE PARTIES 6

X. ORGANIZATIONAL CONFLICTS OF INTEREST 7

XI. GENERAL PROVISIONS 7
A. Laws 7
B. Headings and Titles 7
C. Severability 8
D. Written Notices 8
E. Understanding 8
F. Failure to Enforce 8
G. Contract Rights 8

XII. AUTHORITY 9

CERTIFICATION OF CONTRACTOR 10

CERTIFICATION OF DIRECTOR 11

CONTRACT FOR IM-0055-01(097)/105877301
LOCATED IN THE COUNTY OF LINCOLN
STATE OF MISSISSIPPI,
COUNTY OF HINDS

THIS CONTRACT IS EXECUTED BY AND BETWEEN THE MISSISSIPPI TRANSPORTATION COMMISSION, A BODY CORPORATE OF THE STATE OF MISSISSIPPI, ("COMMISSION') AND THE UNDERSIGNED CONTRACTOR, AN ENTITY DULY AUTHORIZED TO DO BUSINESS IN THE STATE OF MISSISSIPPI, ("CONTRACTOR") EFFECTIVE AS OF THE DATE OF LATEST EXECUTION BELOW.

WITNESSETH:

THAT WHEREAS, the people of the State of Mississippi will benefit from the construction of the said Bridge Widening on I-55, in Lincoln County, Mississippi (hereinafter referred to as "the Project"), due to increased safety and use of the widened shoulders by emergency vehicles, especially during hurricane evacuations; and

WHEREAS, the Commission, desires the completion of this strategic Project, as it is in the best interest of the people of the State of Mississippi; and

WHEREAS, the Commission, working with the people, the federal government, and other agencies of the State of Mississippi, has devised an innovative plan to allow the commencement and completion of the Project in a timely and cost-effective manner; and

WHEREAS, the Commission is authorized under the provision of Section 65-1-85, Miss. Code Ann. (1972) to utilize the design/build method of procurement to design and construct the Project; and

WHEREAS, after a competitive process, Contractor has been selected to participate in this venture by designing and building the Project; and

WHEREAS, the Commission desires to avail itself of and rely upon Contractor's expertise and proven track record in designing and constructing such projects, on time and within budget; and

WHEREAS, the Contractor wishes to provide that expertise and to participate in this venture for the good of the people of the State of Mississippi;

NOW THEREFORE, for and in consideration of the mutual promises and covenants hereinafter set forth, the Commission and the Contractor mutually agree as follows:

I. CONTRACT DOCUMENTS

The Contract shall be composed of all items (listed A through M) below, and any amendments thereto. Each of these documents below are an essential part of the Contract. The documents are intended to be complimentary and are intended to be read as a complete Contract. In case of conflict, ambiguity or inconsistency the order of precedence, from highest to lowest, of the Contract documents shall be:

A. Section 902
B. Exhibits to Section 902
   Exhibit 1 – As-Built Plans of Project features prior to Contract, by MDOT
   Exhibit 2 – Environmental Document (Categorical Exclusion)
   Exhibit 3 – Typical Existing Bridge Joint Rehabilitation
   Exhibit 4 – Erosion Control Standards
C. Section 904
   Supplements to Notice to Proposers
   Notice to Proposers
D. Section 905
E. Section 906
   Supplement to Form FHWA-1273
      Minimum Hourly Wage Rates
   Federal-Aid Construction Contracts (Form FHWA-1273)
   Notice of Requirements for Affirmative Action to Ensure Equal Employment Opportunity (Executive Order 11246)
F. Section 907
   Supplements to Special Provisions
   Special Provisions
G. Contractor's Proposal – Contractor's Technical Proposal – Volume 1 – (Only those items that are a higher standard than the Technical Requirements.)
H. Technical Requirements for Design and Construction
I. Final Design Documents (provided by Contractor)
J. Section 903
   Contract Bond
K. Contractors Proposal Volume 1 (Except those items that are a higher standard than the Technical Requirements.)
L. Request for Proposals and Addenda, if any
M. Proposer's (Contractor') Statement of Qualifications

II. PROJECT SCOPE

A. Project Scope of Work

Contractor shall furnish all services, labor, materials, equipment, supplies, tools, transportation, and coordination required to perform all preliminary and final engineering, surveying, geotechnical services, scheduling, permitting, procurement, construction, quality control, material testing, traffic control, and any other services necessary to perform the Project.

The Project Scope shall be as defined in Section 904 – NTP No. 2618-D7-1 DB and the Contractor's Schedule Certificate.

III. CONTRACT PRICE/CONTRACT PAYMENTS

A. Contract Price

The "Contract Price" shall be the amount shown on Section 905 sheet 2-2.

In consideration for the Contract Price, Contractor shall perform all of its responsibilities under the Contract. The Contract Price shall include all Work identified in the Project Scope of Work.

B. Contract Price Adjustments

1. Allowable adjustments

The Contract Price may only be adjusted due to any of the following occurrences:

(a) Commission approved Scope changes, value engineering proposals, directives or authorized extra work.

(b) Acts or omissions by Commission or its duly appointed representative that unreasonably interfere with the Contractor's performance and cause delay of Work on the critical path of the Project.

(c) Changes in a legal requirement or regulation that becomes effective subsequent to the date of this Contract.

(d) Discovery of Hazardous Materials not discoverable from a reasonable investigation and analysis of the site prior to the submission of the Proposal or as allowed in Section V below.

(e) Discovery of archeological or paleontological sites, as noted in Subsection 203.03.1 of the Standard Specifications that was not discoverable from a reasonable investigation and analysis of the Site prior to the Proposal Date.

Other than as provided above, the Contract Price shall not be increased for Contract price adjustments or claimed delay damages. The basis for any allowable price adjustment will be a negotiated amount or by Force Account in accordance with Section 109.04 of the Contract.

2. Changes

(a) A "Change" shall be any deviation or variation from the Project Scope, the Design Criteria or the Construction Criteria of the Project as originally set forth in this Contract. No Change shall be implemented prior to execution of an appropriate Supplemental Agreement. A "Change" may be an "Additive Change" or a "Deductive Change".

(b) MDOT may initiate a Change by advising Contractor in writing of the change. Within seven (7) days, Contractor shall prepare and forward to MDOT an estimate of cost or savings, and the impact to the schedule resulting from the

change. An independent cost estimate may or may not be performed by the Commission's duly authorized representative. Parties to the Contract will then negotiate in good faith partnering efforts to agree on scope and cost impacts. MDOT will advise the Contractor in writing of its approval or disapproval of the change. If the Commission approves the change, the Contractor shall perform the Services as changed.

3. Construction Change Directive

A Construction Change Directive is a written order from MDOT directing a change prior to agreement with the Contractor on adjustment, if any, to the Contract Price or Contract Time.

4. Direct Costs for Construction Change Directive

For the purpose of a Contract Price Adjustment, "Direct Costs" shall be defined as:

(a) costs of labor, including social security, unemployment insurance, fringe benefits required by agreement or custom, and workers' compensation insurance;

(b) costs of labor for QC, surveying and erosion control or fees paid for this Work directly attributable to the change or event;

(c) costs of materials, supplies, and equipment, including cost of transportation, whether incorporated or consumed;

(d) depreciated time value of machinery and equipment owned by Contractor or any affiliated or related entity exclusive of hand tools;

(e) actual costs paid for rental of machinery and equipment exclusive of hand tools;

(f) costs of premiums for all bonds and insurance, permit fees, and sales, use or similar taxes;

(g) additional costs of supervision and field office personnel directly attributable to the change or event; and

(h) Costs incurred or fees paid for design work related to the change or event.

C. Contract Payments

Mobilization shall not exceed 5% of the Contract Price.

MDOT will make Contract Payments in accordance with Subsection 907-109.06 and 907-109.11 of the Technical Standards, Supplements to Special Provisions, and Special Provisions.

IV. CONTRACT COMPLETION DATE AND LIQUIDATED DAMAGES

A. Contract Completion Date

The Contractor shall complete the Project by the date shown on the Contractor's Schedule Certificate, Final Completion Date.

B. Failure to Complete on Time and Liquidated Damages

The Commission will assess liquidated damages against the Contractor for each calendar day beyond the Final Completion Date. The assessment of liquidated damages shall not be considered a penalty; any damages assessed represent a reasonable estimate of fair compensation for the damage of delay that may reasonably be anticipated from the Contractor's failure to complete the Project within the Final Completion Date. If the Contractor fails to complete all items of Work by the Final Completion Date, the Commission will assess liquidated damages of $3,500 per calendar day until the date all items of Work are completed. The assessment of liquidated damages shall be deducted by the Commission from monies due the Contractor, if sufficient monies are available. Otherwise, the Contractor shall pay to the Commission the liquidated damages assessments within fifteen (15) calendar days of notice that payment is due.

V. FORCE MAJEURE

Delays or failures of performance shall not constitute breach of the Contract if and to the extent such delays or failures of performance are caused by severe and not reasonably foreseeable occurrences beyond the control of the Commission or the Contractor, including, but not limited to: Acts of God or the public enemy; expropriation or confiscation of facilities; compliance with any order of any governmental authority other than the Commission or a party in privity with it; Acts of War; rebellion or sabotage or damages resulting there from; fires, floods, hurricanes, explosions, or accidents that require stoppage of the entire Work, riots or nationwide strikes or other concerted acts of workman, whether direct or indirect, encountering rare or endangered species or any similar causes, which are not within the control of the Commission or the Contractor respectively, and which by the exercise of reasonable diligence, the Commission or the Contractor are unable to prevent. Any expense attributable to such occurrence shall not entitle the Contractor to an adjustment in the Contract Price. Dates by which performance obligations are scheduled to be met will be extended for a period of time equal to the critical path time lost due to any delay so caused.

VI. INDEMNITY

The Contractor shall indemnify and hold harmless the Commission and all its officers, agents and employees from any claim, loss, damage, cost, charge or expense arising out of any negligent act, actions, neglect or omission by the Contractor, its agents employees, or subcontractors during the performance of this Contract, whether direct or indirect, and whether to any person or property for which the Commission or said parties may be subject, except that neither the Contractor nor any of its agents or sub-contractors will be liable under this provision for damages arising out of the injury or damage to persons or property solely caused or resulting from the negligence of the Commission or any of its officers, agents or employees.

The Contractor's obligation to indemnify, defend, and pay for the defense, or at the Commission's option, to participate and associate with the Commission in the defense and trial or arbitration of any damage claim, lien or suit and related settlement negotiations shall be initiated by the Commission's notice of claim for indemnification to the Contractor. The Contractor's evaluation of liability, or its inability to evaluate liability, shall not excuse Contractor's duty to defend. Only an adjudication or judgment after the highest appeal is exhausted specifically finding the Commission entirely responsible shall excuse performance of this provision by the Contractor. In such case, the Commission shall pay all costs and fees related to this obligation and its enforcement. Should there be a finding of dual or multiple liability, costs and fees shall be apportioned accordingly.

In conjunction herewith, the Commission agrees to notify the Contractor as soon as practicable after receipt or notice of any claim involving Contractor. These indemnities shall not be limited by reason of the listing of any insurance coverage or warranties elsewhere herein.

VII. RECORD RETENTION

The Contractor shall maintain all documents for a period of three (3) years after Payment of Final Voucher.

During the three (3) year retention period, the Commission, the FHWA or duly authorized representatives thereof will be granted access to those documents upon reasonable notice. At any time during the period, the Commission will have the option of taking custody of the documents. The Contractor shall obtain a written release from MDOT prior to destroying the records after the three (3) year retention period.

VIII. OWNERSHIP OF DOCUMENTS

Drawings, specifications, test data, inspection reports, QC documents, daily diaries, record drawings, shop drawings, engineering reports, survey control data, safety records and any other documents, including those in electronic form, prepared by Contractor or Contractor's consultants for the Project are "Project Documents". MDOT shall be the owner of the Project Documents. Upon the Effective Date of this Contract, MDOT grants Contractor and Contractor's consultants permission to reproduce and use the Project Documents for purposes of using, maintaining, upgrading, or adding to the Project. The Contractor shall provide hard copies and electronic copies to MDOT before Final Acceptance.

IX. RELATIONSHIP OF THE PARTIES

The relationship of the Contractor to the Commission is that of an independent contractor, and said Contractor, in accordance with its status as an independent contractor, covenants and agrees that it will conduct itself consistent with such status, that it will neither hold itself out as, nor claim to be, an officer or employee of the Commission by reason hereof. The Contractor will not by reason hereof, may any claim, demand or application or for any right or privilege applicable to an officer or employee of the Commission, including but not limited to workers' compensation coverage, unemployment insurance benefits, social security coverage, retirement membership or credit, or any form of tax withholding whatsoever.

The Commission executes all directives and orders through the Mississippi Department of Transportation. All notices, communications and correspondence between the Commission and the Contractor shall be directed to the Project Director and Commission designated agents shown in Section XI.

The term MDOT and Commission as used in the Contract may be interchanged as appropriate.

X. ORGANIZATIONAL CONFLICTS OF INTEREST

The Contractor's attention is directed to 23 CFR Section 636 Subpart A and in particular to Subsection 636.116 regarding organization conflicts of interest. Subsection 636.103 defines "organizational conflict of interest" as follows:

> Organizational conflict of interest means that because of other activities or relationships with other persons, a person is unable or potentially unable to render impartial assistance or advice to the owner, or the person's objectivity in performing the contract work is or might be otherwise impaired, or a person has an unfair competitive advantage.

Contractor shall provide information concerning potential organizational conflicts of interest and disclose all relevant facts concerning any past, present or currently planned interests which may present an organizational conflict of interest. Contractor shall state how its interests or those of its chief executives, directors, key individuals for this Project, or any proposed consultant, contractor or subcontractor may result, or could be viewed as, an organizational conflict of interest.

The Contractor is prohibited from receiving any advice or discussing any aspect relating to the Project or the procurement of the Project with any person or entity with an organizational conflict of interest, including, but not limited to URS Corporation, and any affiliates of URS Corporation. Such persons and entities are prohibited from participating in a Proposer's organization relating to the Project.

The Contractor agrees that, if after award, an organizational conflict of interest is discovered, the Contractor must make an immediate and full written disclosure to MDOT that includes a description of the action that the Contractor has taken or proposes to take to avoid or mitigate such conflicts. If an organizational conflict of interest is determined to exist, MDOT may, at is discretion, cancel the Design-Build contract for the Project. If the Contractor was aware of an organizational conflict of interest prior to the award of the contract and did not disclose the conflict to MDOT, MDOT may terminate the contract for default.

MDOT may disqualify a Contractor if any of its major participants belong to more than one Contractor's organization.

XI. GENERAL PROVISIONS

A. Laws

This Contract shall be governed by and interpreted in accordance with the substantive laws of the State of Mississippi.

B. Headings and Titles

Headings and titles of the various parts of this Contract are for convenience of reference only and shall not be considered in interpreting the text of this Contract. Modifications or amendments to this Contract must be in writing and executed by duly authorized representatives of each party.

C. Severability

To the extent that this Contract may be construed as to any portion to be violative of any State, Federal or local ordinance, statute, law or executive order, now or in the future, the balance hereof shall remain in full force and effect.

D. Written Notices

All deliveries and notices pertaining to this Contract shall be in writing and, if to Commission, will be sufficient when sent registered or certified mail, or faxed with proof of receipt, to MDOT addressed to the MDOT Project/Resident Engineer.

_____
Project/Resident Engineer
_____

_____

All notices to Contractor shall be sufficient when registered or certified mail, or faxed with proof of receipt, to Contractor addressed as follows:

_____
Project Director
_____

_____

E. Understanding

The Contract Documents set forth the full and complete understanding of the parties as of the Effective Date defined herein, and supersede any and all agreements and representations made or dated prior thereto.

F. Failure to Enforce

In no event shall any failure by either party hereto to fully enforce any provision to this Contract be construed as a waiver by such party of its right to subsequently enforce, assert or rely upon such provision.

G. Contract Rights

Nothing in this Contract is intended to create any Contract rights for any party other than the Commission and Contractor, nor are any third-party beneficiary rights intended to be created hereby.

XII. AUTHORITY

We the undersigned do hereby certify that we have the authority to execute this Contract for and on behalf of the entity listed below.

WITNESS my signature in execution hereof, this the _____day of _____, 2010.

CONTRACTOR

_____

TITLE: _____

Attest: _____

WITNESS my signature in execution hereof, this the ____day of _____, 2010.

MISSISSIPPI TRANSPORTATION COMMMISSION,
BY AND THROUGH THE DULY AUTHORIZED
EXECUTIVE DIRECTOR OF THE MISSISSIPPI
DEPARTMENT OF TRANSPORTATION

_____
Larry L. Brown, Executive Director
Mississippi Department of Transportation

_____
Secretary to the Commission

Award authorized by the Mississippi Transportation Commission in session on the ____ day of _____, 20___, Book _____, Page_____

CERTIFICATION OF CONTRACTOR

I hereby certify that I am the duly authorized representative of the Contractor and that neither I nor the above Contractor has:

(a) employed or retained for a commission, percentage, brokerage, contingent fee, or other consideration, any firm or person (other than a bona fide employee working solely for me or the above Contractor) to solicit or secure this Contract;

(b) Agreed, as an express or implied condition for obtaining this Contract, to employ or retain the services of any firm or person in connection with carrying out the Contract, or

(c) paid, or agreed to pay, to any firm, organization or person (other than a bona fide employee working solely for me or the above Contractor) any fee, contribution, donation, or consideration of any kind for, or in connection with, procuring or carrying out the Contract except as here expressly stated (if any);

(d) Either directly or indirectly, entered into any agreement, participated in any collusion, or otherwise taken any action, in restraint of free competitive bidding in connection with the submitted Proposal.

I acknowledge that this certificate is to be furnished to the Department, the Federal Highway Administration, and the U. S. Department of Transportation, and is subject to applicable State and Federal laws, both criminal and civil.

By: _____
Contractor

Date: _____

CERTIFICATION OF DIRECTOR

I hereby certify that I am the Executive Director of the Mississippi Department of Transportation (MDOT) of the State of Mississippi and that the above Contractor or its representative has not been required, directly or indirectly, as an express or implied condition in connection with obtaining or carrying out this Contract to:

(a) employ or retain, or agree to employ or retain, any firm or person,

or

(b) pay, or agree to pay, to any firm, person, or organization, any fee, contributions, donations, or consideration of any kind, except as here expressly stated (if any).

I acknowledge that this certificate is to be furnished to the Federal Highway Administration, and U. S. Department of Transportation, and is subject to applicable State and Federal laws, both criminal and civil.

By: _____
Larry L. "Butch" Brown
Executive Director

Date: _____

SECTION 902 EXHIBITS

Exhibit 1
As-Built Plans
(On CD Provided)

Exhibit 2

Categorical Exclusion and Permits

ENV-160
Rev. 10/09

MISSISSIPPI DEPARTMENT OF TRANSPORTATION
ENVIRONMENTAL DIVISION
ENVIRONMENTAL CLASS OF ACTION DETERMINATION

DISTRICT NO: 7 **F.A. NO:** 0055
PROJECT NO: IM-0055-01(097) **HIGHWAY NO:** 55
SECTION NO: 01 **COUNTY:** Lincoln

7. APPROVED BY:

DISTRICT ENGINEER **DATE** 12 Apr 10

PLANNING ENGINEER **DATE** 4/20/10

ROADWAY DESIGN ENGINEER **DATE** 4/20/10

ENVIRONMENTAL ENGINEER / ADMINISTRATOR **DATE** 4-27-10

8. FHWA CONCURRENCE:
FHWA DIVISION ADMINISTRATOR **DATE** 4/28/10

1. PROJECT TERMINI: Interstate 55 between the Pike-Lincoln County Line and the Pike-Copiah County Line.

(A.) EXISTING CONDITIONS: Interstate 55 is a hurricane evacuation route in District 7. Some of the existing bridges along Interstate 55 in Lincoln County are functionally obsolete and do not meet the minimum standards for bridge width.

(B.) PROPOSED IMPROVEMENTS: To increase the width of the existing bridges on this hurricane evacuation route.

(C.) PRELIMINARY PURPOSE & NEED: Widen the existing bridges to current standards on Interstate 55 in Lincoln.

(D.) NEW ROW REQUIRED: ☐ YES ☒ NO

2. ENVIRONMENTAL CONSEQUENCES EVALUATION (CHECK ONE)	SIG.	MIN.	NONE	COMMENTS IDENTIFYING ISSUES WHICH MAKES IMPACT SIGNIFICANT OR MINIMAL
A. LAND USE IMPACTS			X	
B. FARMLAND IMPACTS			X	
C. SOCIAL IMPACTS			X	
D. RELOCATION IMPACTS			X	
E. ECONOMIC IMPACTS			X	
F. JOINT DEVELOPMENT			X	
G. CONSIDERATIONS RELATING TO PEDESTRAINS & BICYCLISTS			X	
H. AIR QUALITY IMPACTS			X	
I. NOISE IMPACTS		X		During Construction
J. WATER QUALITY IMPACTS			X	
K. PERMITS			X	
L. WETLAND/STREAM IMPACTS		X	~~X~~	Minimal Wetlands Nationwide 23
M. WATER BODY MODIFICATION & WILDLIFE IMPACTS			X	
N. FLOODPLAIN IMPACTS			X	
O. WILD & SCENIC RIVERS			X	
P. COASTAL BARRIERS			X	
Q. COASTAL ZONE IMPACTS			X	
R. THREATENED OR ENDANGERED SPECIES			X	
S. HISTORIC & ARCHAEOLOGICAL PRESERVATION / 4(f) LANDS			X	
T. HAZARDOUS WASTE SITES			X	
U. VISUAL IMPACTS		X		During Construction
V. ENERGY			X	
W. CONSTRUCTION IMPACTS			X	

3. PUBLIC INVOLVEMENT RECOMMENDATIONS: NONE

4. ACTION REQUIRED:

CATEGORICAL EXCLUSION ☒	106 CONSULTATION ☐	ENDANGERED SPECIES ASSESSMENT ☐		
EA/FONSI ☐	EIS ☐	NOISE STUDY ☐	SHPO LETTER ☐	4 (f) STATEMENT ☐
CLASS DETERMINATION: CATEGORICAL EXCLUSION				

5. WETLANDS/STREAMS FINDING (CEX ONLY): ~~NONE~~ Minimal Wetlands covered under Nationwide #23

6. OTHER REMARKS: FMS NO. 105877/301000.

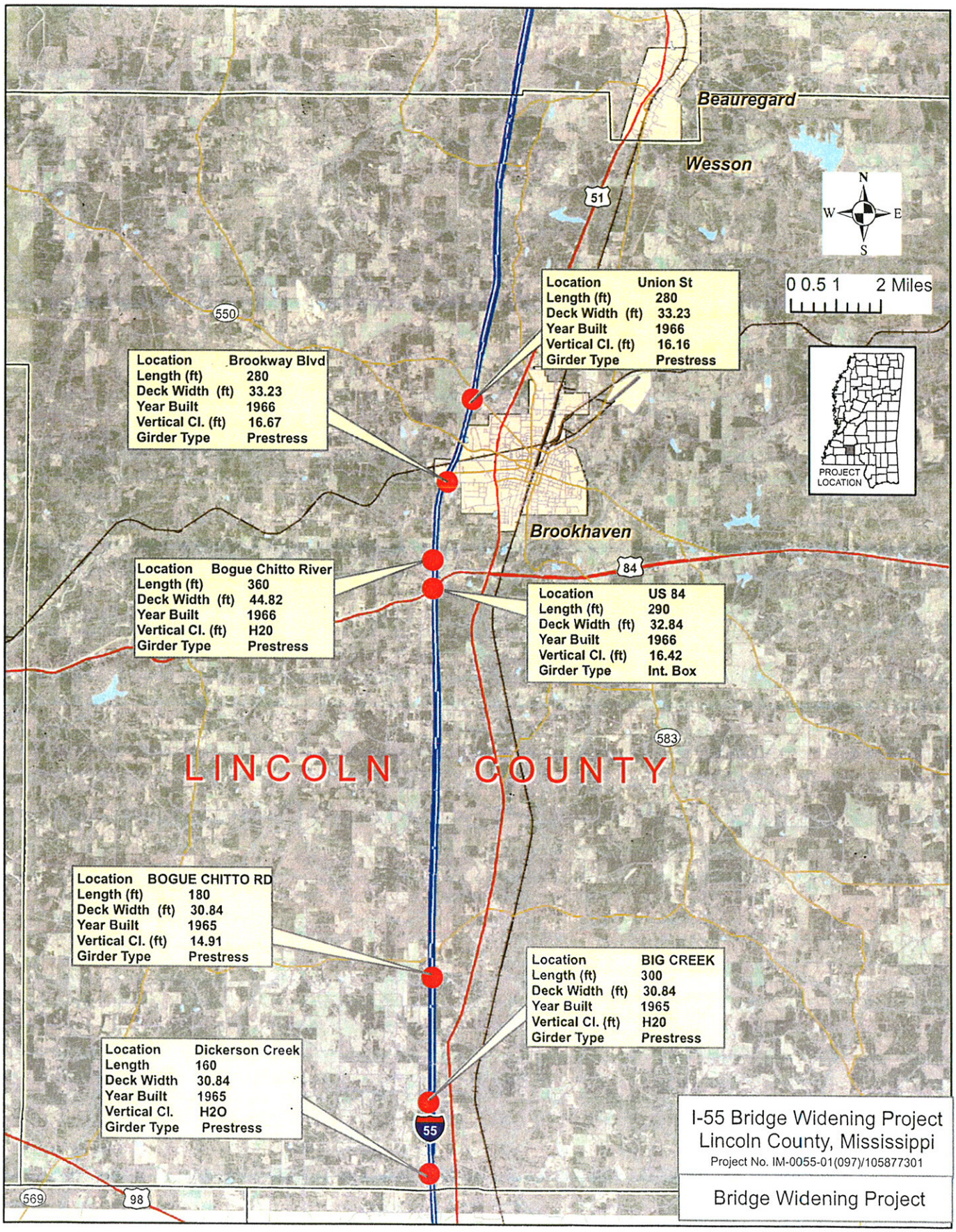
Beauregard
Wesson
51
N
W
E
S
0 0.5 1 2 Miles
550
Location Union St
Length (ft) 280
Deck Width (ft) 33.23
Year Built 1966
Vertical Cl. (ft) 16.16
Girder Type Prestress
Location Brookway Blvd
Length (ft) 280
Deck Width (ft) 33.23
Year Built 1966
Vertical Cl. (ft) 16.67
Girder Type Prestress
PROJECT LOCATION
Brookhaven
84
Location Bogue Chitto River
Length (ft) 360
Deck Width (ft) 44.82
Year Built 1966
Vertical Cl. (ft) H20
Girder Type Prestress
Location US 84
Length (ft) 290
Deck Width (ft) 32.84
Year Built 1966
Vertical Cl. (ft) 16.42
Girder Type Int. Box
583
LINCOLN COUNTY
Location BOGUE CHITTO RD
Length (ft) 180
Deck Width (ft) 30.84
Year Built 1965
Vertical Cl. (ft) 14.91
Girder Type Prestress
Location BIG CREEK
Length (ft) 300
Deck Width (ft) 30.84
Year Built 1965
Vertical Cl. (ft) H20
Girder Type Prestress
Location Dickerson Creek
Length 160
Deck Width 30.84
Year Built 1965
Vertical Cl. H2O
Girder Type Prestress
55
569
98
I-55 Bridge Widening Project
Lincoln County, Mississippi
Project No. IM-0055-01(097)/105877301
Bridge Widening Project

Exhibit 3

Typical Existing Bridge Joint Rehabilitation

JOINT REPAIR NOTES:

1. The Intent Of The Contract Is To Remove All Joint Armor Existing At The Time The Contract Is Let, Repair Joints With Epoxy Mortar And Seal Joints With A Silicone Joint Sealant. It Is Possible That Between Plan Preparation And Letting Time, Joint Armor Shown To Be Removed May Have Been Removed Earlier By Department Personnel. Also, The Number Of Joints Requiring Sawcutting May Change Due To Temperature Changes. Quantities Shall Be Adjusted Accordingly.
2. Payment For Joint Preparation, Joint Repair And Removal Of Joint Armor Shall Be Paid For As The Length Along The Bridge Deck On Each Side Of The Centerline Of Joint.
3. Sawcutting The Joint Is Required At Existing Joints That Have Less Than ½ Inch Of Opening.
4. Silicone Sealed Joints Are Required At All Joints.
5. Payment For Silicone Sealed Joints And Sawcutting The Joints Shall Be Paid For As The Length Along The Centerline Of Joint Only And Not Each Side Of The Joint.
6. Removal Of Existing Joint Sealants Will Not Be Paid For Directly And Therefor Shall Be Considered As An Absorbed Item Of Work.

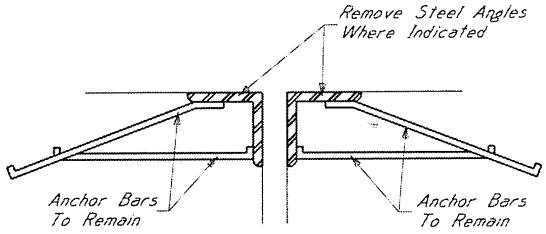

TYPICAL SECTION AT JOINT REPAIR

Showing Existing Joint Armor To Be Removed

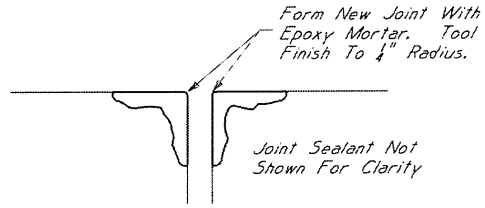

TYPICAL SECTION AT JOINT REPAIR

Showing Joint After Epoxy Mortar Repair

EPOXY MORTAR AND POLYMER CONCRETE NOTES:

1. Epoxy Mortar Shall Be "HP-BINDER" As Manufactured By Hunt Process Corporation, P.O. Box 688, Ridgeland, MS 39158, Telephone No. (601)856-8811, Or Approved Equal And Installed According To The Manufacturer's Recommendations.
2. Polymer Concrete May Be Used In Place Of Epoxy Mortar. Polymer Concrete Shall Be As Manufactured By Polymer Concrete, Inc. P. O. Box 610, Camden, AL 36726, (205)682-4296, Or Approved Equal And Installed According To The Manufacturer's Recommendations.

GENERAL NOTES:

1. Specifications: Mississippi Standard Specifications For Road And Bridge Construction, 1990.
2. No Change Of Plans Will Be Permitted Except By Written Approval Of The Bridge Engineer. Minor Changes Of Detail Of Design Or Construction Procedure May Be Authorized By The Bridge Engineer Provided Such Changes Will Not Be Cause For Contract Price Adjustment.
3. Work For Which No Pay Item Is Provided In The Proposal Will Not Be Paid For Directly And Compensation Therefor Will Be Included In The Prices And Payments For Bid Items.

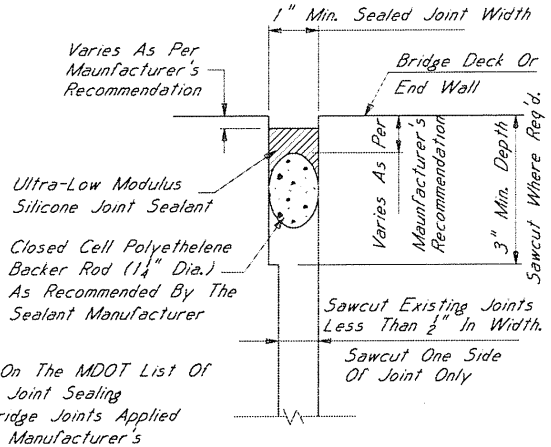

NOTE:
Sealant Shall Be On The MDOT List Of Approved Silicone Joint Sealing Compounds For Bridge Joints Applied According To The Manufacturer's Directions.

TYPICAL SECTION AT SAWCUT & SEALED JOINT

Showing Silicone Sealed Joint After Sawcut And Repair With Epoxy Mortar

ESTIMATED QUANTITIES			
PAY ITEM NO.	PAY ITEM	QUANTITY	UNIT
808-A	Joint Preparation		Lin. Ft.
907-824-PP	Bridge Repair (Joint Repair) Per Plans		Lin. Ft.
907-824-PP	Bridge Repair (Removal Of Joint Armor) Per Plans		Lin. Ft.
907-824-PP	Bridge Repair (Silicone Sealed Joints) Per Plans		Lin. Ft.
907-824-PP	Bridge Repair (Sawcut Joints) Per Plans		Lin. Ft.

STATE	PROJECT NO.
MISS.	

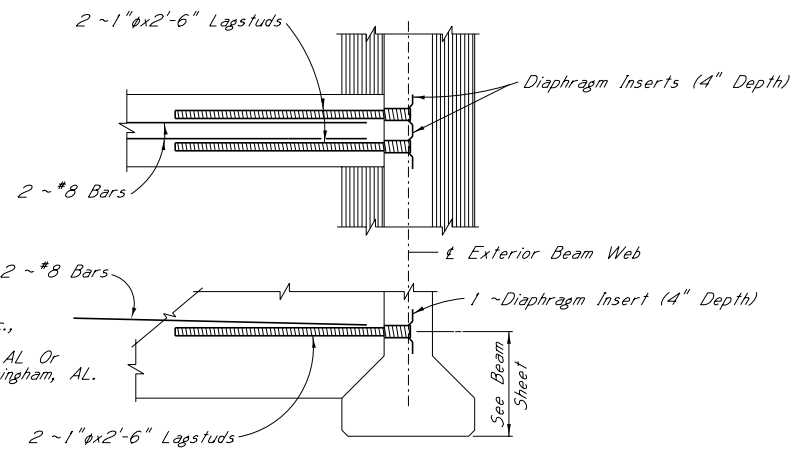

NOTE: Continuous Threaded Lagstuds And Diaphragm Inserts Shall Be As Manufactured By The Richmond Screw Anchor Co., Inc., Atlanta, GA; By Meadow Steel Products Co., Inc., Birmingham, AL Or Dayton Superior Co., Inc., Birmingham, AL.

PART SECTION

DIAPHRAGM INSERT AND LAGSTUD DETAILS

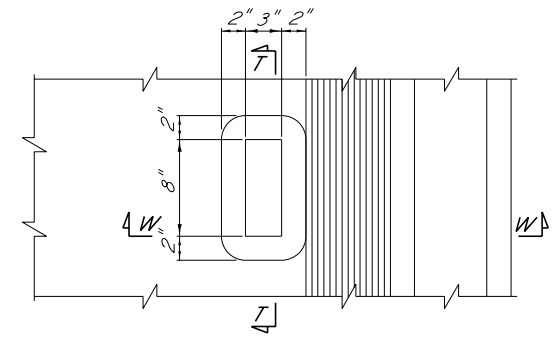

DETAIL "D"

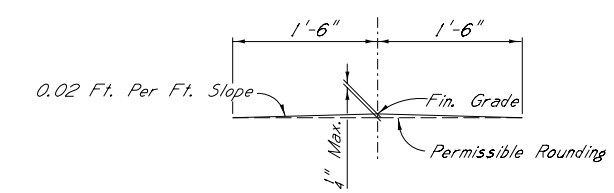

CROWN DETAILS

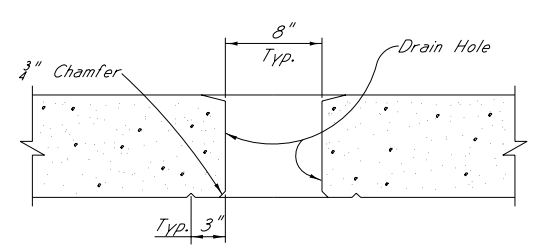

SECTION T-T

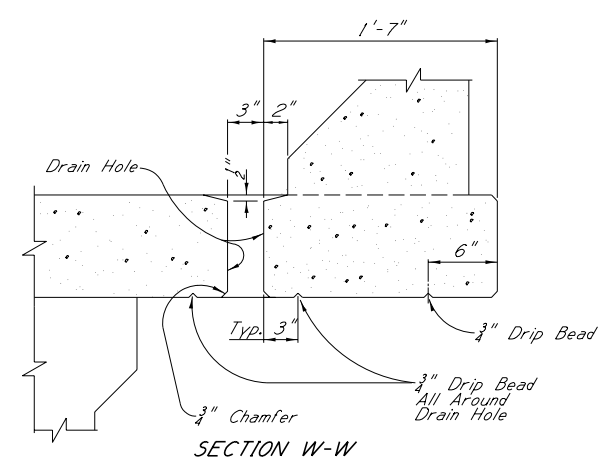

SECTION W-W

NOTE: Drain Holes Shall Be Located So That Bars B & C Will Not Be Cut. If Necessary One Bar A May Be Cut In Field.

DRAIN HOLE DETAILS

Use Where Shown On The Span Detail Sheet.

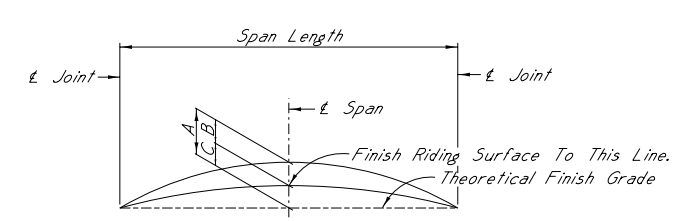

DEFLECTION DIAGRAM

A = Total Recommended Allowance For Deflection.
B = Estimated Deflection Due To Dead Load Of Slab & Rail.
C = A-B = Net Initial Camber In Riding Surface, Which Includes An Allowance For Creep.

NOTE: For Values Of A,B & C, See Beam Detail Sheets.

NOTE: The Deflection Values Shown On The Beam Detail Sheets Were Prepared And Intended For Design And Estimation Purposes Only. It Is The Contractor's Responsibility To Determine Bridge Girder Deflections For Use In Calculating Bridge Deck Form Grades. Prior To Formwork Construction, The Contractor Shall Submit Three (3) Copies Of Deck Form Grades, Bridge Girder Deflections And Bridge Girder Profiles To The Bridge Engineer For Review, Through The Project Engineer. This Submittal Shall Include All Calculations, Assumptions And Parameters Used By The Contractor To Determine Bridge Girder Deflections And Form Grade Elevations And Shall Be Stamped By A Mississippi Registered Professional Engineer.

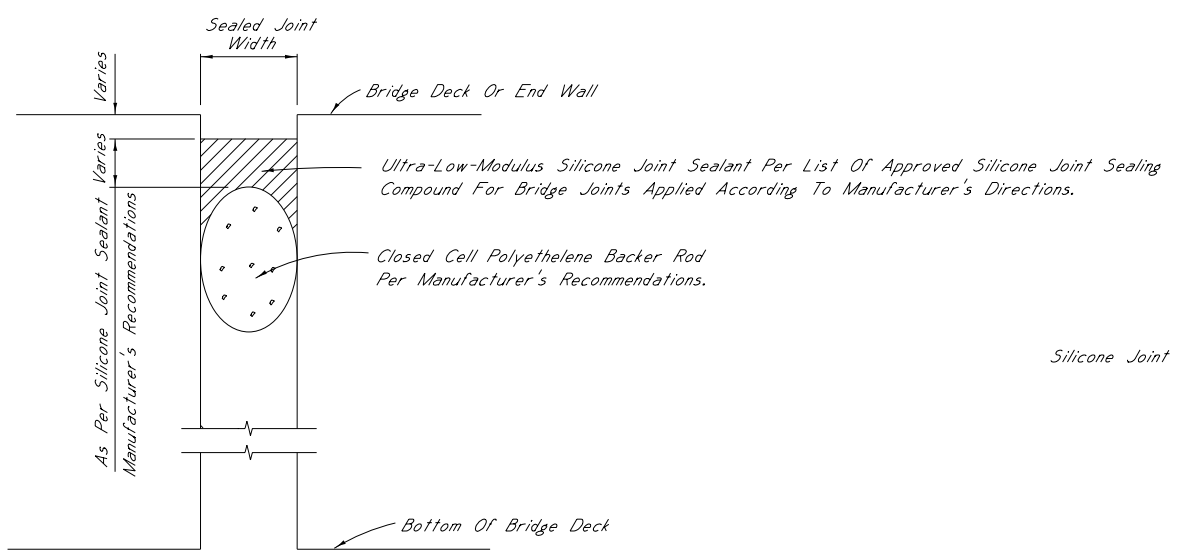

TYPICAL SECTION

SILICONE SEALED JOINT

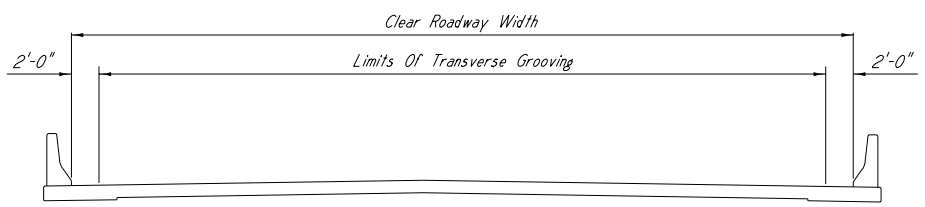

LIMITS OF TRANSVERSE GROOVING

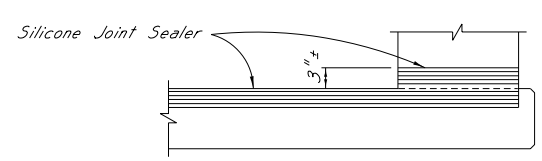

ELEVATION AT END OF SPAN

NEOPRENE PAD THICKNESS TABLE	
PAD THICKNESS	COMPRESSED PAD THICKNESS

GENERAL NOTES:

All Concrete In Span And Railing Shall Be Class "AA".
Chamfer All Edges ¾", Unless Otherwise Noted.
See Layout Sheet For Finishing Of Concrete Surfaces.
Placing Dimensions For Reinforcing Steel To Concrete Surfaces Are Clear Distances.
To Determine The Dimension From Finish Grade To Cap, The Assumption Is Made That The Compressed Thickness Of The Neoprene Pad Is As Shown In Table, And That The Original Camber Of The Beams Will Be Within The Limits Shown On The Beam Detail Sheets. The Bridge Engineer Shall Be Notified If The Cambers Not Within These Limits.

NOTE: The Contractor Should Be Aware That The Joint Opening (Width) Can Change At Temperatures Higher Or Lower Than The 60°F Design Width. Installation Of The Joint Sealer Material Shall Be In Accordance With Manufacturer's Recommendations.

NOTE: Seal All Open Joints As Shown On The Layout Sheet. Width Of Joint Is Shown In End Bent And Span Details. Seal Joint When It Is At Or Near Its Design Width. A Representative Of The Joint Sealant Manufacturer Shall Be Present At The Time Joint Sealing Begins To Ensure That The Contractor Is Properly Schooled In The Installation Of The Joint Material.

NOTE: Joints In Newly Constructed Bridge Decks Shall Be Protected From Damage Until Accepted For Maintenance By The State. Damaged Joints Shall Be Repaired At No Cost To The State.

BY | REVISIONS | DATE

MISSISSIPPI DEPARTMENT OF TRANSPORTATION

MISCELLANEOUS SPAN DETAILS

PROJECT

COUNTY

WORKING NUMB

SHEET NUMBE

DESIGNED ____ DETAILED ____ TRACED ____
CHECKED ____ ISSUED ____ DATE ____

Category	Material Name	Producer/Supplier	Eff. Dt.	Exp. Dt.	Remarks
RETROREFLECTIVE SIGN SHEETING	REFLEXITE TYPE V AP1000 MICROPRISMATIC	REFLEXITE AMERICAS	02/20/2007	Unexpired	MICROPRISMATIC DELINEATOR SHEETING
RETROREFLECTIVE SIGN SHEETING	REFLEXITE TYPE V AR1000 MICROPRISMATIC	REFLEXITE AMERICAS	02/20/2007	Unexpired	Abrasive Resistant Microprismatic Delineator Sheeting
SILICONE JOINT MTL-BRIDGE	DOW CORNING 902 RCS (BRIDGE)	DOW CORNING	01/01/2000	Unexpired	
SILICONE JOINT MTL-BRIDGE	WABCO 2-PART SELF-LEVEL SEAL (BRIDGE)	WATSON BOWMAN ACME CORP.	01/01/2000	Unexpired	
SILICONE JOINT MTL-PAVEMENT	BAYSILCONE 960 SILICONE SEALANT	BAYER CORPORATION	01/01/2000	Unexpired	
SILICONE JOINT MTL-PAVEMENT	CRAFCO ROADSAVER SILICONE	CRAFCO, INC.	01/01/2000	Unexpired	
SILICONE JOINT MTL-PAVEMENT	CRAFCO ROADSAVER SILICONE "SL"	CRAFCO, INC.	01/01/2000	Unexpired	
SILICONE JOINT MTL-PAVEMENT	DOW CORNING 888	DOW CORNING	01/01/2000	Unexpired	
SILICONE JOINT MTL-PAVEMENT	DOW CORNING 890-SL(CONC. TO ASPHALT)	DOW CORNING	01/01/2000	Unexpired	
SOIL REINFORCING MATS	AEC CURLEX ENFORCER	AMERICAN EXCELSIOR COMPANY	01/01/2007	Unexpired	
SOIL REINFORCING MATS	AEC CURLEX HIGH VELOCITY	AMERICAN EXCELSIOR COMPANY	01/01/2007	Unexpired	
SOIL REINFORCING MATS	AEC CURLEX II	AMERICAN EXCELSIOR COMPANY	01/01/2007	Unexpired	
SOIL REINFORCING MATS	AEC CURLEX III	AMERICAN EXCELSIOR COMPANY	01/01/2007	Unexpired	
SOIL REINFORCING MATS	RECYCLEX TRM-V	AMERICAN EXCELSIOR COMPANY	12/22/2008	Unexpired	
SOIL REINFORCING MATS	RECYLEX TRM	AMERICAN EXCELSIOR COMPANY	10/26/2006	Unexpired	
SOIL REINFORCING MATS	EARTH-LOCK	COLBOND, INC.	01/01/2000	Unexpired	
SOIL REINFORCING MATS	ENKAMAT 7012	COLBOND, INC.	01/01/2000	Unexpired	
SOIL REINFORCING MATS	ENKAMAT 7018	COLBOND, INC.	01/01/2007	Unexpired	
SOIL REINFORCING MATS	ENKAMAT 7020	COLBOND, INC.	01/01/2000	Unexpired	
SOIL REINFORCING MATS	ENKAMAT 7210	COLBOND, INC.	01/01/2000	Unexpired	
SOIL REINFORCING MATS	ENKAMAT 7220	COLBOND, INC.	01/01/2000	Unexpired	
SOIL REINFORCING MATS	ENKAMAT II	COLBOND, INC.	01/01/2007	Unexpired	
SOIL REINFORCING MATS	ECC-3	EAST COAST EROSION BLANKETS, LLC	01/01/2007	Unexpired	
SOIL REINFORCING MATS	C32	EROSIONCONTROLBLANKETS. COM	01/01/2007	Unexpired	
SOIL REINFORCING MATS	SC32	EROSIONCONTROLBLANKETS. COM	01/01/2007	Unexpired	
SOIL REINFORCING MATS	PEC-MAT	GREENSTREAK, INC.	01/01/2000	Unexpired	
SOIL REINFORCING MATS	MACMAT N10	MACCAFERRI ENVIRONMENTAL SOLUTIONS	01/01/2007	Unexpired	
SOIL REINFORCING MATS	MACMAT N20	MACCAFERRI ENVIRONMENTAL SOLUTIONS	01/01/2007	Unexpired	
SOIL REINFORCING MATS	MACMAT N6G	MACCAFERRI ENVIRONMENTAL SOLUTIONS	01/01/2007	Unexpired	
SOIL REINFORCING MATS	MACMAT N6P	MACCAFERRI ENVIRONMENTAL SOLUTIONS	01/01/2007	Unexpired	
SOIL REINFORCING MATS	MACMAT N8G	MACCAFERRI ENVIRONMENTAL SOLUTIONS	01/01/2007	Unexpired	
SOIL REINFORCING MATS	MACMAT N8P	MACCAFERRI ENVIRONMENTAL SOLUTIONS	01/01/2007	Unexpired	

Exhibit 4
Erosion Control Plan

STATE	PROJECT NO.
MISS.	

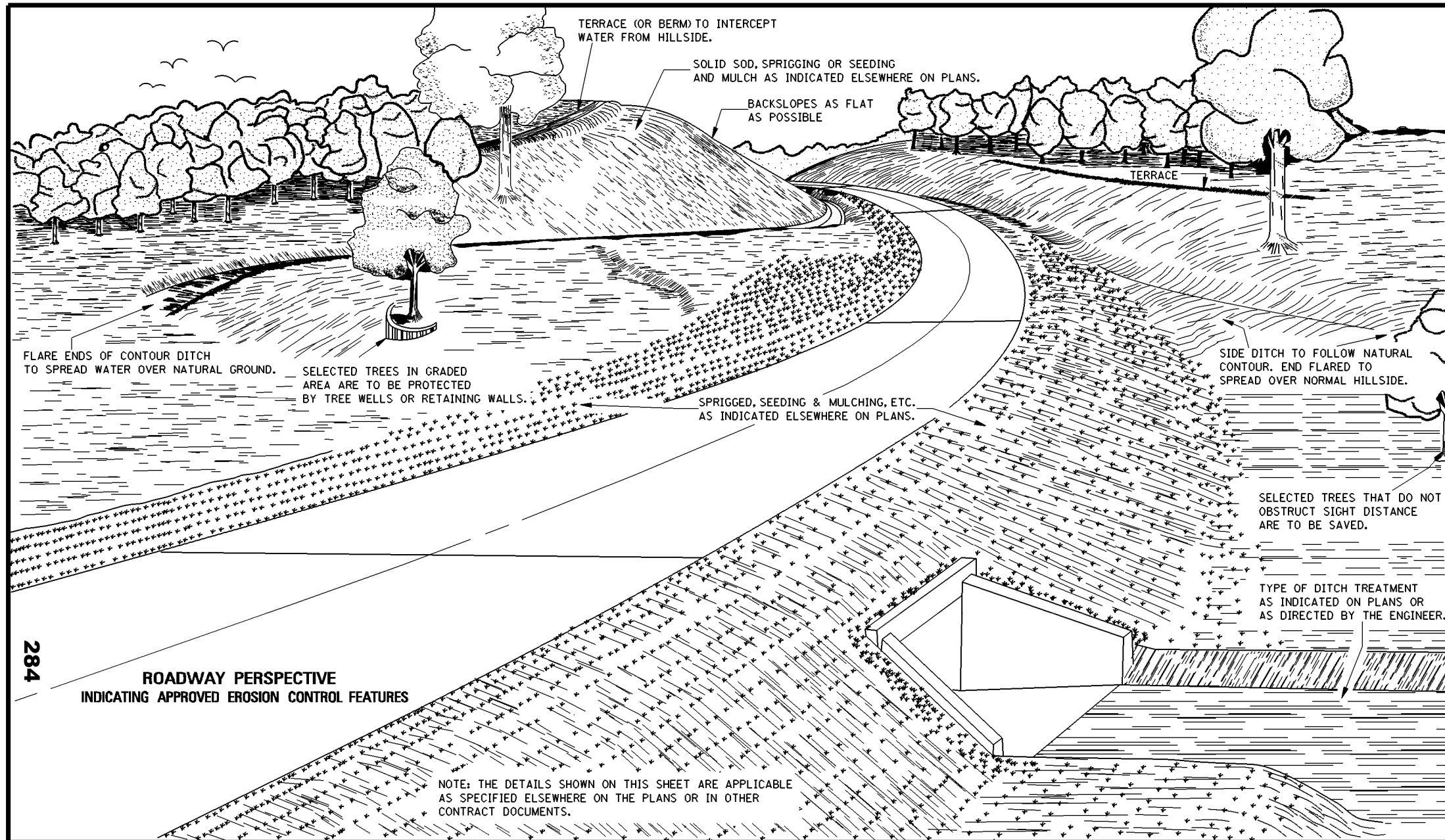

ROADWAY PERSPECTIVE
INDICATING APPROVED EROSION CONTROL FEATURES

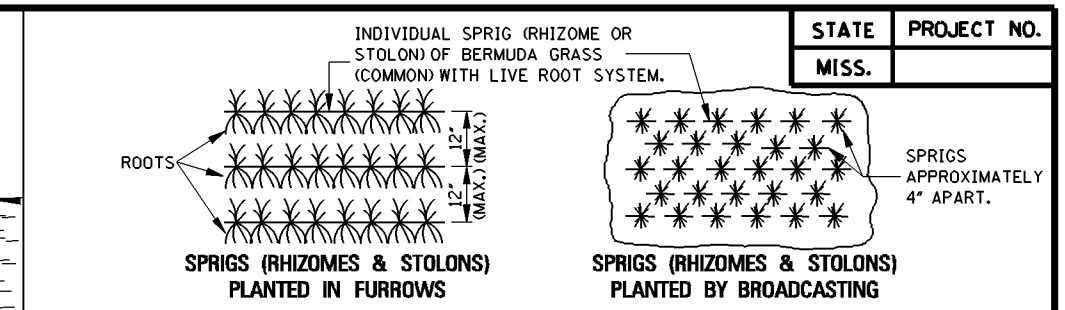

SPRIGS (RHIZOMES & STOLONS) PLANTED IN FURROWS

SPRIGS (RHIZOMES & STOLONS) PLANTED BY BROADCASTING

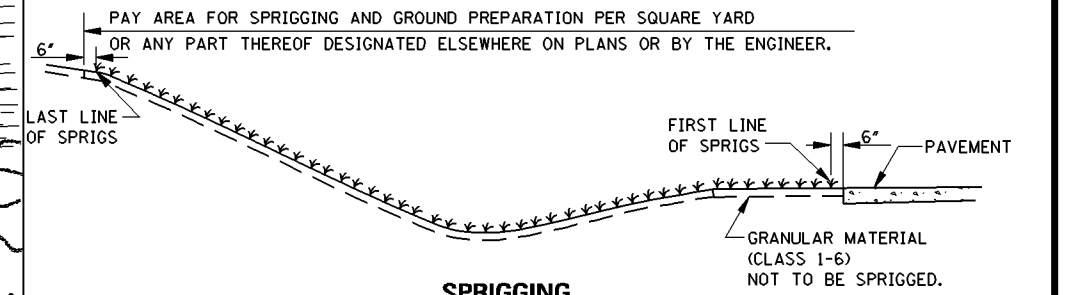

SPRIGGING

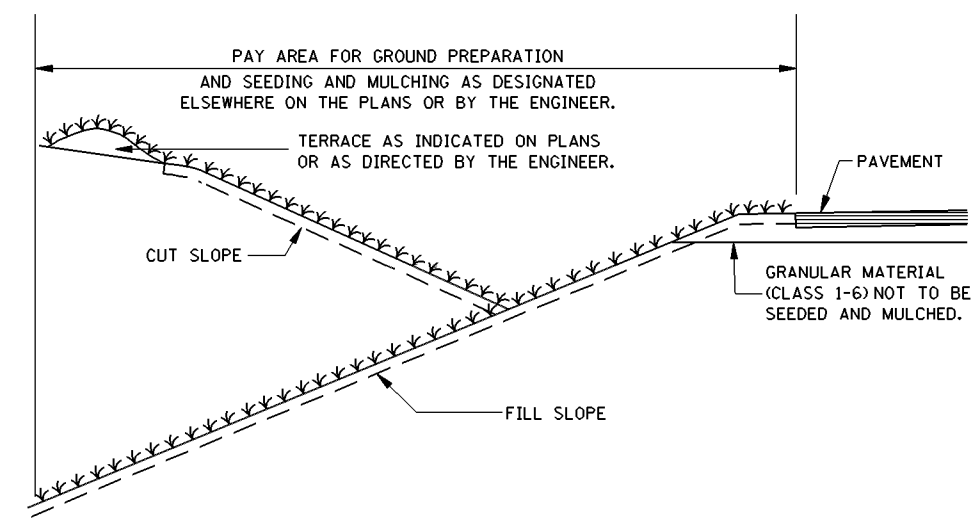

SEEDING AND MULCHING

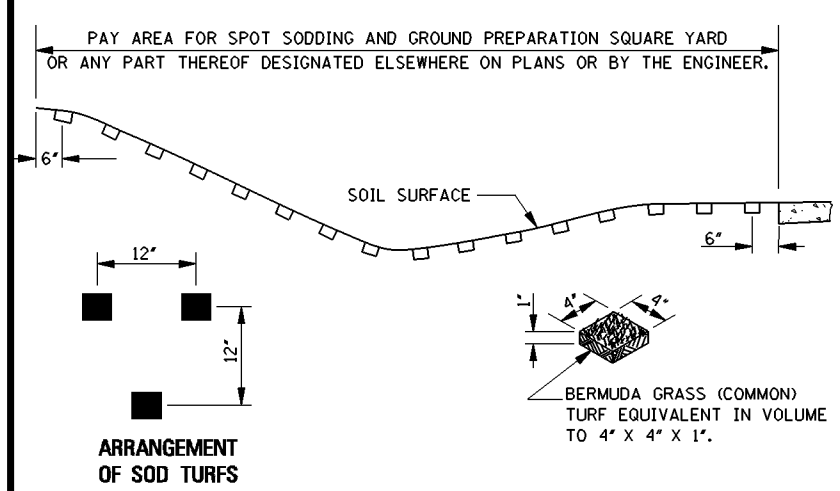

ARRANGEMENT OF SOD TURFS

SPOT SODDING

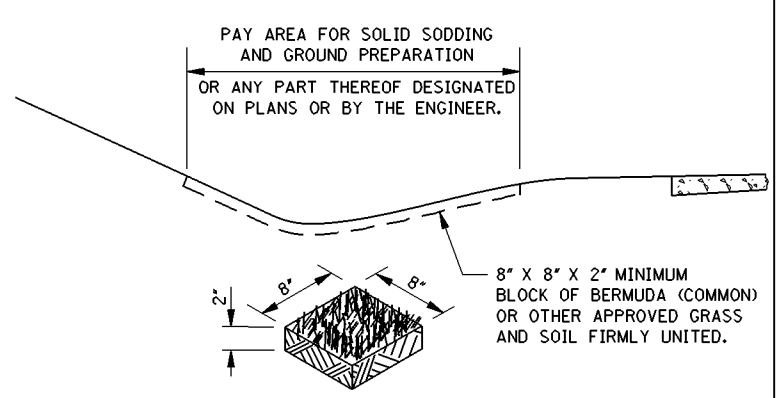

SOLID SODDING

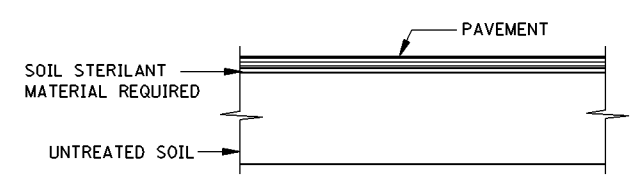

SOIL STERILIZATION UNDER PAVED AREAS
(ISLANDS, MEDIANS OR SLOPE PAVEMENT)

GENERAL NOTE:

1. LONGITUDINAL AND TRANSVERSE MEASUREMENTS FOR THE PAY AREA SHALL BE TAKEN ALONG THE SLOPES.

DATE	REVISION	BY

MISSISSIPPI DEPARTMENT OF TRANSPORTATION
ROADWAY DESIGN DIVISION
STANDARD PLAN

EROSION CONTROL

ENGLISH

WORKING NUMBER EC-1

ISSUE DATE: OCTOBER 1, 1998

SHEET NUMBER 140

STATE	PROJECT NO.
MISS.	

NOTES:

1. "J-HOOK" CONFIGURATION SILT FENCE APPLICATIONS ARE TO BE USED IN CONJUNCTION WITH PERIMETER SILT FENCE WHEN STORMWATER RUNOFF IS IN TWO DIRECTIONS (DOWN A FILL SLOPE AND DOWN GRADIENT ALONG THE RIGHT-OF-WAY).
2. "SMILE CONFIGURATION" APPLICATIONS ARE TO BE USED AS PERIMETER SILT FENCE WHEN THERE IS ONE-DIRECTIONAL FLOW DOWN A SLOPE.
3. SAND BAGS CAN BE USED AS DIVERSION BERMS TO PREVENT SEDIMENT FROM BEING WASHED ONTO OR ACROSS HARD SURFACES, OR TO HELP SLOW SHEET FLOW VELOCITY WHEN DRAINING AWAY FROM HARD SURFACES.
4. FOR SHORTER SLOPES AND/OR SLOPES THAT ARE LESS STEEP, DIVERSION BERMS CAN BE USED TO SAFELY CONVEY STORMWATER AWAY FROM OR AROUND A DENUDED AREA. THEY CAN BE CONSTRUCTED USING A MANUFACTURED SILT DIKE OR BY CONSTRUCTING A TEMPORARY EARTH BERM AND TRENCH WITH GEOTEXTILE OR POLYETHYLENE SHEETING PROTECTION.
5. TEMPORARY DEWATERING STRUCTURES CAN BE USED DURING CULVERT CONSTRUCTION, STREAM DIVERSIONS, OR OTHER CONSTRUCTION ACTIVITIES WHERE TURBID WATERS NEED TO BE CLARIFIED BEFORE RELEASE.
6. THE ABUTMENT SLOPE TOE BERM SHALL BE 3 FEET TALL. THE BERM MAY BE CONSTRUCTED WITH ROCK IN ACCORDANCE WITH REQUIREMENTS FOR ROCK DITCH CHECKS ON ECD-8 OR WITH SOIL IN ACCORDANCE WITH TEC-2 IF BERM IS USED. IT MUST BE GRASSED

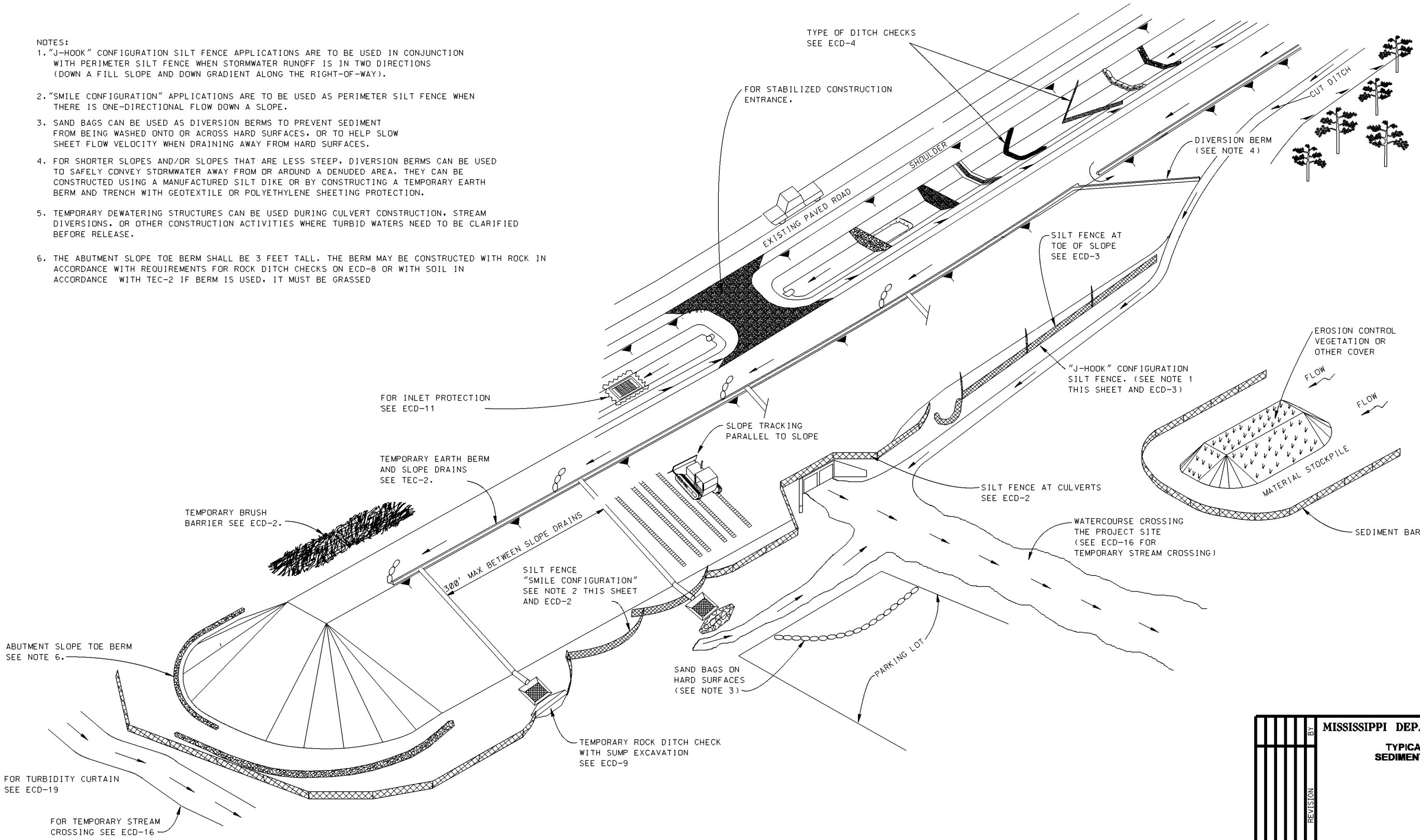

REVISION	BY	DATE

MISSISSIPPI DEPARTMENT OF TRANSPORTATION

TYPICAL TEMPORARY EROSION/ SEDIMENT CONTROL APPLICATIONS

WORKING NUMBER
ECD-1
SHEET NUMBER

FILENAME: EROSION CONTROL\ECD-1.DGN

DESIGN TEAM _____ CHECKED _____ DATE _____

PLAN
ROADWAY DESIGN DIVISION
MISSISSIPPI DEPARTMENT OF TRANSPORTATION

285

1/19/2010 12:18PM ECD-1.DGN

STATE	PROJECT NO.
MISS.	

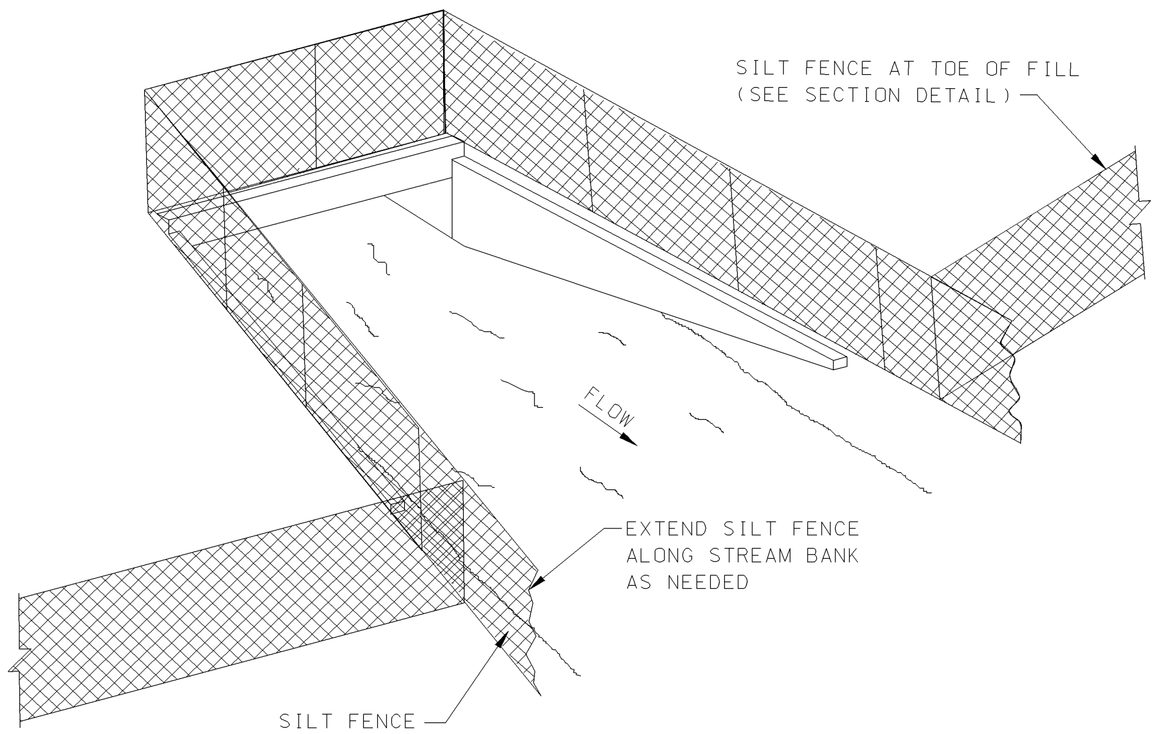

SEDIMENT BARRIER AT CROSS DRAIN

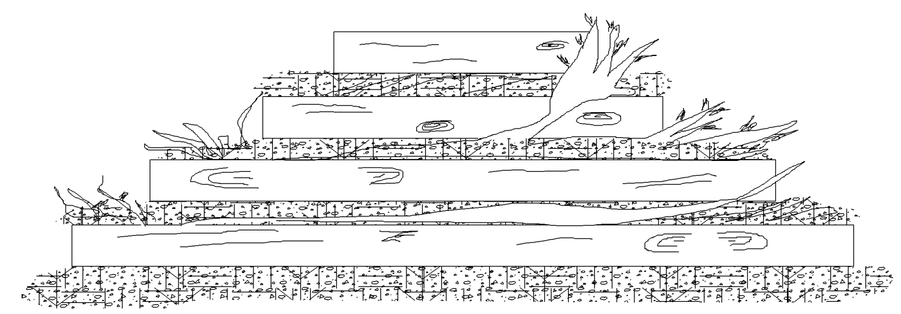

FRONT ELEVATION

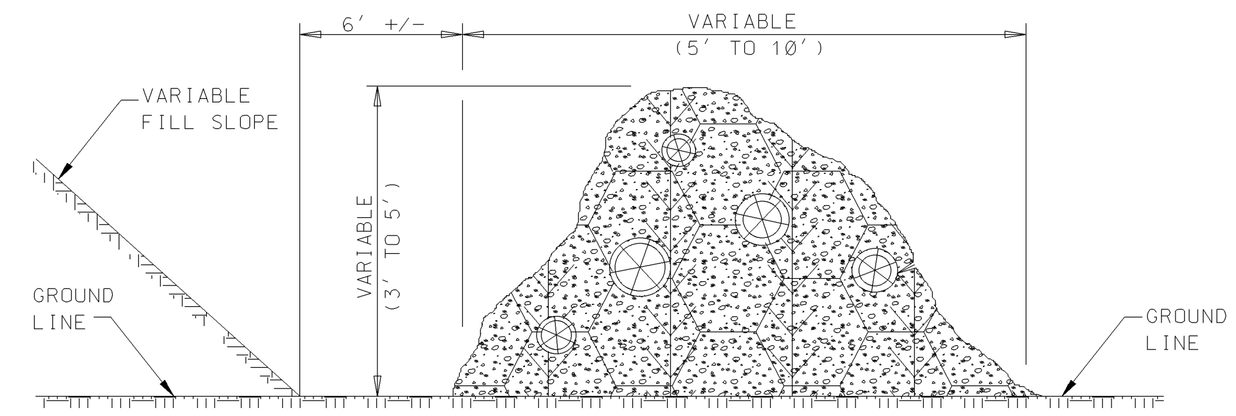

SIDE ELEVATION

TEMPORARY BRUSH BARRIER

NOTES:
1. BRUSH BARRIER MAY BE USED WHERE NATURAL GROUND IS LEVEL OR SLOPING AWAY FROM PROJECT.
2. PLACE BRUSH, LOG AND TREE LAPS APPROXIMATELY PARALLEL TO TOE OF FILL SLOPE WITH SOME OF THE HEAVIER MATERIALS BEING PLACED ON TOP TO PROPERLY SECURE THE BARRIER AS DETAILED AT LOCATIONS SHOWN ON PLANS OR AS DIRECTED OR PERMITTED BY THE ENGINEER.
3. TO ALLOW WATER TO SEEP THROUGH BRUSH BARRIER, INTERMINGLE THE BRUSH, LOG AND TREE LAPS SO AS NOT TO FORM A SOLID DAM.
4. THE BRUSH BARRIER MAY BE CHOKED WITH FILTER FABRIC.
5. TEMPORARY BRUSH BARRIER WILL NOT BE MEASURED FOR SEPERATE PAYMENT

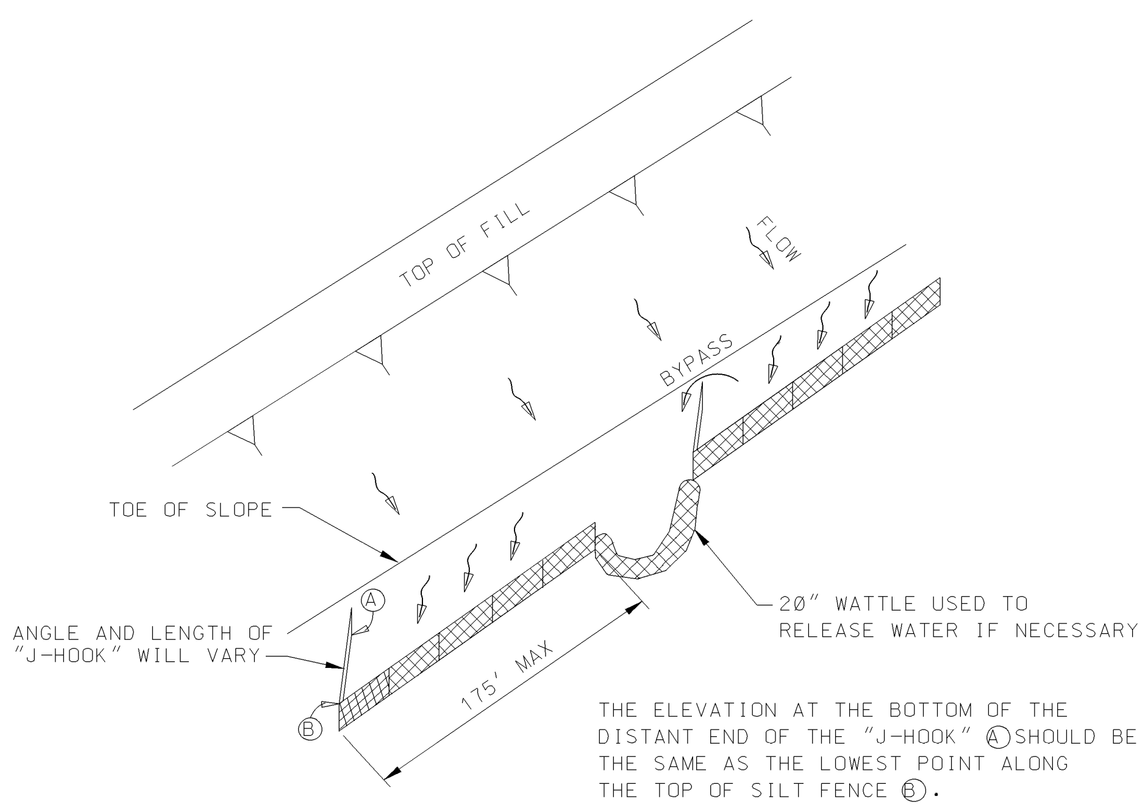

"J-HOOK" SILT FENCE APPLICATION

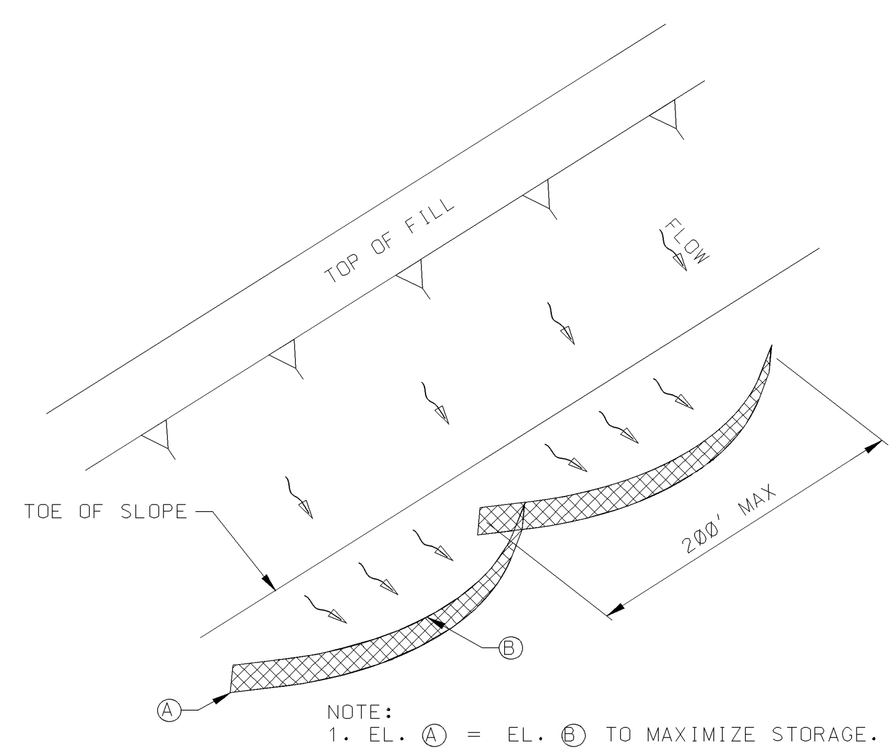

NOTE:
1. EL. (A) = EL. (B) TO MAXIMIZE STORAGE.

"SMILE-CONFIGURATION" SILT FENCE APPLICATION

NOTE:
1. ANCHOR AND INSTALL SILT FENCE PER DETAILS SHOWN ON ECD-3

* SILT FENCE SHOULD BE LOCATED AWAY FROM THE TOE OF THE SLOPE TO PROVIDE SUFFICIENT SPACE TO ALLOW A BROAD, FLAT AREA FOR SEDIMENT ACCUMULATION AND MAINTENANCE ACTIVITIES. THE ENDS OF THE SILT FENCE SHOULD BE TURNED UP GRADIENT TO MAXIMIZE STORAGE.

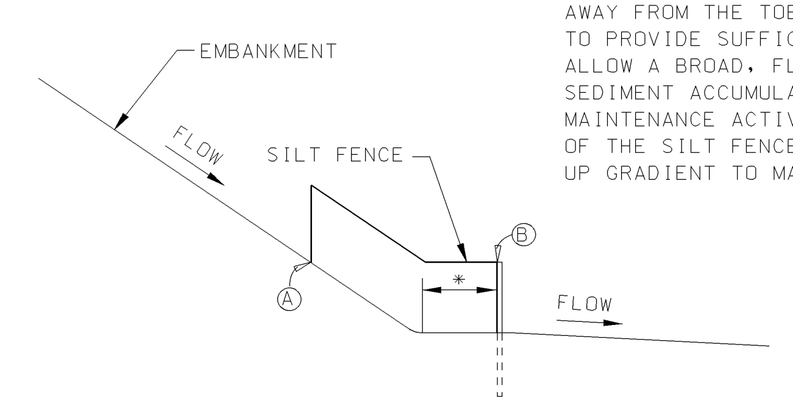

SILT FENCE SECTION AT TOE OF FILL

REVISION	BY	DATE

MISSISSIPPI DEPARTMENT OF TRANSPORTATION

DETAILS OF SEDIMENT BARRIER APPLICATIONS

WORKING NUMBER
ECD-2
SHEET NUMBER

FILENAME: EROSION CONTROL\ECD-2.DGN
DESIGN TEAM ____ CHECKED ____ DATE ____

ROADWAY DESIGN DIVISION
MISSISSIPPI DEPARTMENT OF TRANSPORTATION
1/28/2010 8:54 AM ECD-2.DGN

STATE	PROJECT NO.
MISS.	

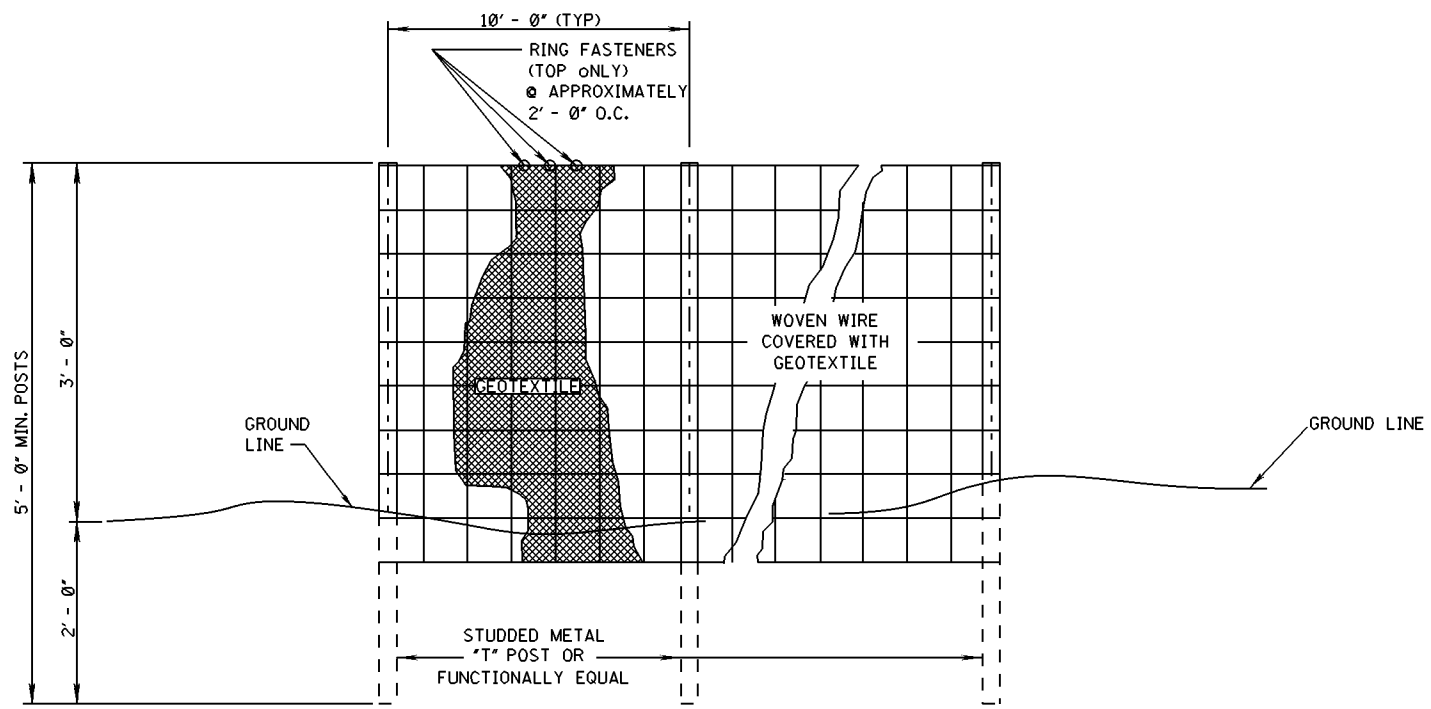

ELEVATION VIEW

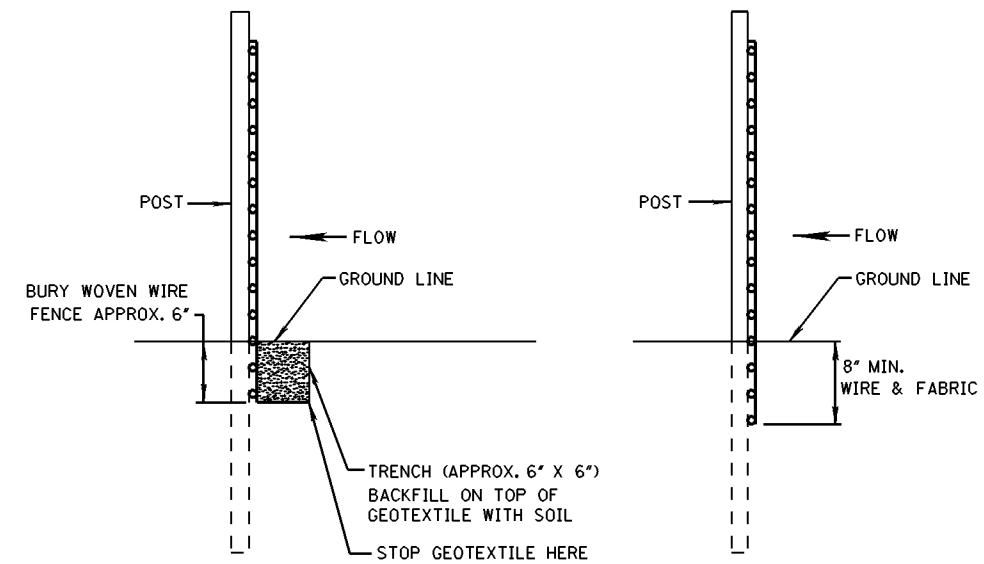

METHOD I

METHOD II
MECHANICAL INSTALLATION

SIDE VIEW

NOTES:
1. SILT FENCES SHALL BE USED IN AREAS WHERE FLOW IS NOT SEVERE.
2. SILT FENCES ARE TEMPORARY SEDIMENT CONTROL ITEMS THAT SHALL BE ERECTED OPPOSITE ERODIBLE AREAS SUCH AS NEWLY GRADED FILL SLOPES AND ADJACENT TO STREAMS AND CHANNELS.
3. SILT FENCE SHOULD BE PLACED WELL INSIDE RIGHT-OF-WAY AND ALONG EDGE OF CLEARING LIMITS. THIS WILL ALLOW ROOM FOR A BACK-UP FENCE IF FIRST FENCE BECOMES FULL.
4. WHEREVER POSSIBLE SILT FENCE SHALL BE CONSTRUCTED ACROSS A LEVEL AREA IN THE SHAPE OF A SMILE. THIS AIDS IN PONDING OF RUNOFF AND FACILITATES SEDIMENTATION.
5. THE CONTRACTOR MAY ELECT TO USE EITHER METHOD I OR METHOD II. COST TO BE LINEAR FEET OF SILT FENCE.
6. METHOD II INSTALLATION SHALL BE ACCOMPLISHED USING AN IMPLEMENT THAT IS MANUFACTUREED FOR THE APPLICATION AND PROVIDES A CONFIGURATION MEETING THE REQUIREMENTS OF THE DETAIL.
7. WIRE SHALL BE MINIMUM OF 32" IN WIDTH AND SHALL HAVE A MINIMUM OF 6 LINE WIRES WITH 12" STAY SPACING.
8. GEOTEXTILE FABRIC MEETING THE TYPE II MATERIAL REQUIREMENTS AND INSTALLED ACCORDING TO SPECIFICATION MAY BE USED WITHOUT WIRE FENCE.

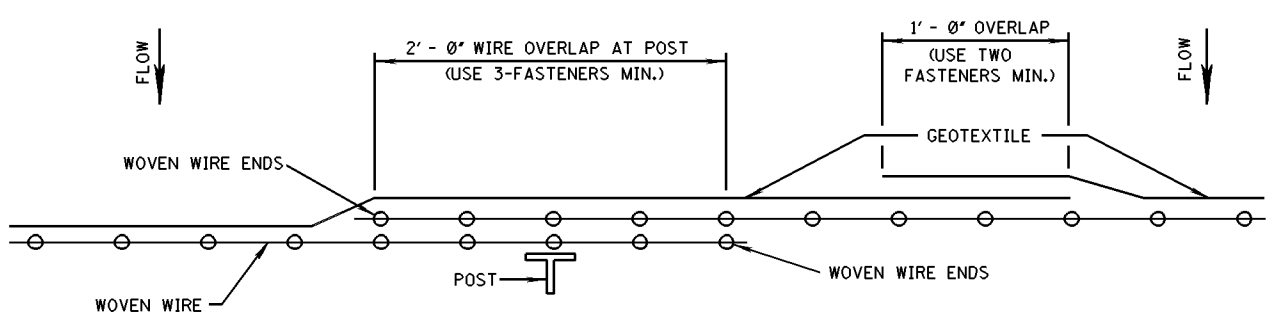

PLAN VIEW

REQUIRED LAPPING

REVISION	BY	DATE

MISSISSIPPI DEPARTMENT OF TRANSPORTATION

DETAILS OF SILT FENCE INSTALLATION

FILENAME: EROSION CONTROL\ECD-3.DGN

DESIGN TEAM _____ CHECKED _____ DATE _____

WORKING NUMBER ECD-3

SHEET NUMBER

PLAN ROADWAY DESIGN DIVISION MISSISSIPPI DEPARTMENT OF TRANSPORTATION
1/20/2010 8:09 AM ECD-3.DGN

STATE	PROJECT NO.
MISS.	

REFERENCE PROJECT NO	FISCAL YEAR	SHEET NO

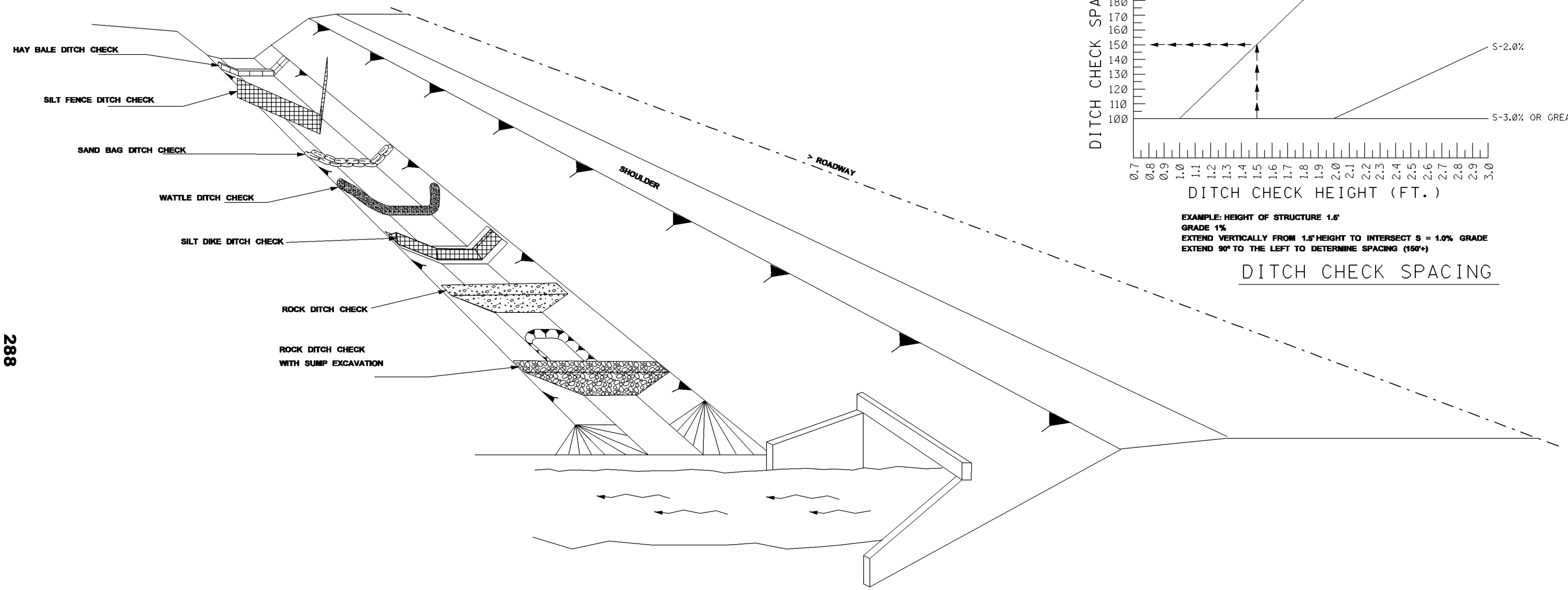

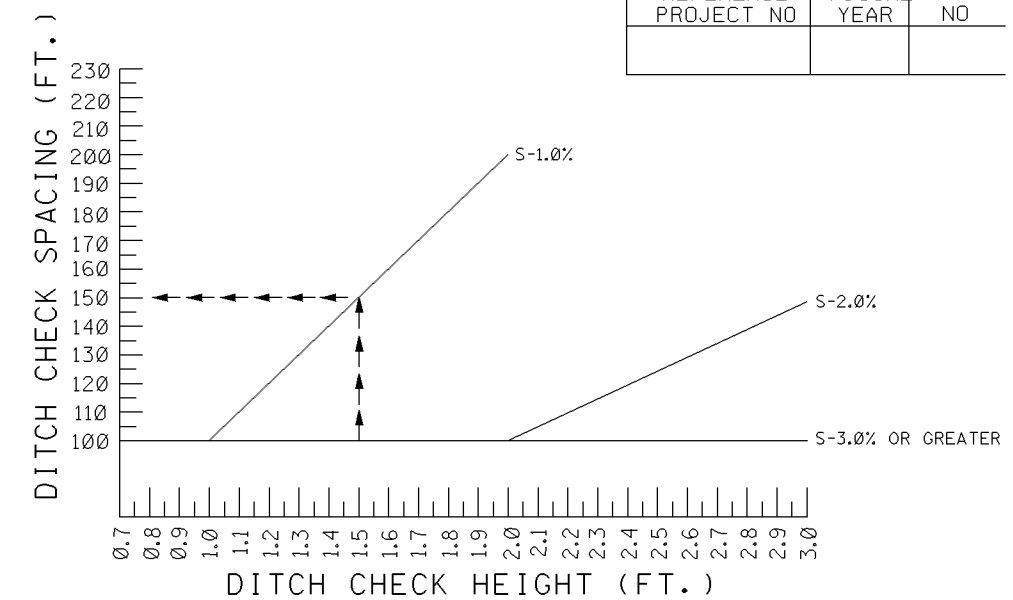

EXAMPLE: HEIGHT OF STRUCTURE 1.5'
GRADE 1%
EXTEND VERTICALLY FROM 1.5' HEIGHT TO INTERSECT S = 1.0% GRADE
EXTEND 90° TO THE LEFT TO DETERMINE SPACING (150'+)

DITCH CHECK SPACING

NOTES:

1. THE DITCH CHECK PERSPECTIVE ILLUSTRATES A TOOL BOX OF TEMPORARY PRACTICES THAT MAY BE USED. DITCH CHECKS ARE INSTALLED TO CONTROL RUNOFF VELOCITY AND THUS REDUCE EROSION AND PROVIDE FOR TRAPPING OF SEDIMENTS.
2. SELECTION OF THE APPROPRIATE DITCH CHECK SHOULD BE A FUNCTION OF CONSTRUCTION PHASE, DRAINAGE AREA, DITCH GRADIENT, SOIL TYPE ECONOMY AND SAFETY.
3. DITCH CHECKS CAN BE REMOVED FOR MAINTENANCE AND/OR REPLACEMENT BUT MUST REMAIN IN PLACE UNTIL UPSLOPE AREAS HAVE BEEN PERMANENTLY STABILIZED. MAINTENANCE INCLUDES REMOVAL OF SEDIMENT BEGINNING WHEN SEDIMENT ACCUMULATION REACHES 1/3 THE CAPACITY OR HEIGHT OF THE STRUCTURE AND NEVER ALLOWING FOR SEDIMENT TO ACCUMULATE MORE THAN 1/2 THE VOLUME OR HEIGHT OF THE DITCH CHECK STRUCTURE.
4. HAY BALES ARE USED TO INTERCEPT LOW VOLUME FLOWS IN LOW TO MODERATE GRADIENT DITCHES.
5. SILT FENCE DITCH CHECKS ARE USED WHERE IT HAS BEEN DETERMINED THAT HAY BALE CHECKS ARE INADEQUATE. SILT FENCE DITCH CHECKS ARE USED TO INTERCEPT LOW VOLUME FLOWS IN LOW TO MODERATE GRADIENT DITCHES.
6. SAND BAG DITCH CHECKS ARE USED FOR VELOCITY REDUCTION AND MINIMAL SEDIMENT TRAPPING IN CONCRETE PAVED DITCHES OR IN DITCHES THAT HAVE ROCKY BOTTOMS.
7. WATTLE DITCH CHECKS ARE APPROPRIATE FOR VELOCITY REDUCTION AND CONTROL OF SEDIMENT TRANSPORT UNDER LOW TO MEDIUM FLOW CONDITIONS.
8. SILT DIKES CAN BE USED IN DITCHES WITH CONCENTRATED FLOWS WITHIN THE CLEAR ZONE WHERE RIPRAP CAN NOT BE USED. AS CONSTRUCTION PROGRESSES.
9. ROCK DITCH CHECK WITH SUMP EXCAVATION CAN BE PLACED IN DITCHES TO ASSURE ON-SITE SEDIMENT TRAPPING REQUIREMENTS ARE MET. DITCH CHECK WITH SUMP EXCAVATION IS USED WHEN DITCHES RECEIVE DRAINAGE FROM CUT OR FILL SLOPES OR OTHER CRITICAL AREAS WHERE SOIL EROSION IS EXPECTED. DRAINAGE AREA FOR A TEMPORARY SEDIMENT TRAP SHALL NOT EXCEED 3 ACRES. THEY CAN BE USED IN SERIES TO INCREASE ON-SITE SEDIMENT TRAPPING EFFICIENCY.
10. IN GENERAL, DITCH CHECKS SHOULD NOT BE PLACED IN LIVE STREAMS.
11. CONFIGURATION AND SPACING MAY BE ADJUSTED IF APPROVED BY THE ENGINEER TO ACCOMODATE TRAVELWAY SAFETY, WATER FLOW, OR SOIL AND INSTALLATION CHALLENGES.

REVISION	BY	DATE

MISSISSIPPI DEPARTMENT OF TRANSPORTATION

DITCH CHECK STRUCTURES, TYPICAL APPLICATIONS AND DETAILS

WORKING NUMBER
ECD-4

SHEET NUMBER

FILENAME: EROSION CONTROL\ECD-4.DGN
DESIGN TEAM _____ CHECKED _____ DATE _____

PLAN
ROADWAY DESIGN DIVISION
MISSISSIPPI DEPARTMENT OF TRANSPORTATION
1/20/2010 8:10 AM ECD-4.DGN

STATE	PROJECT NO.
MISS.	

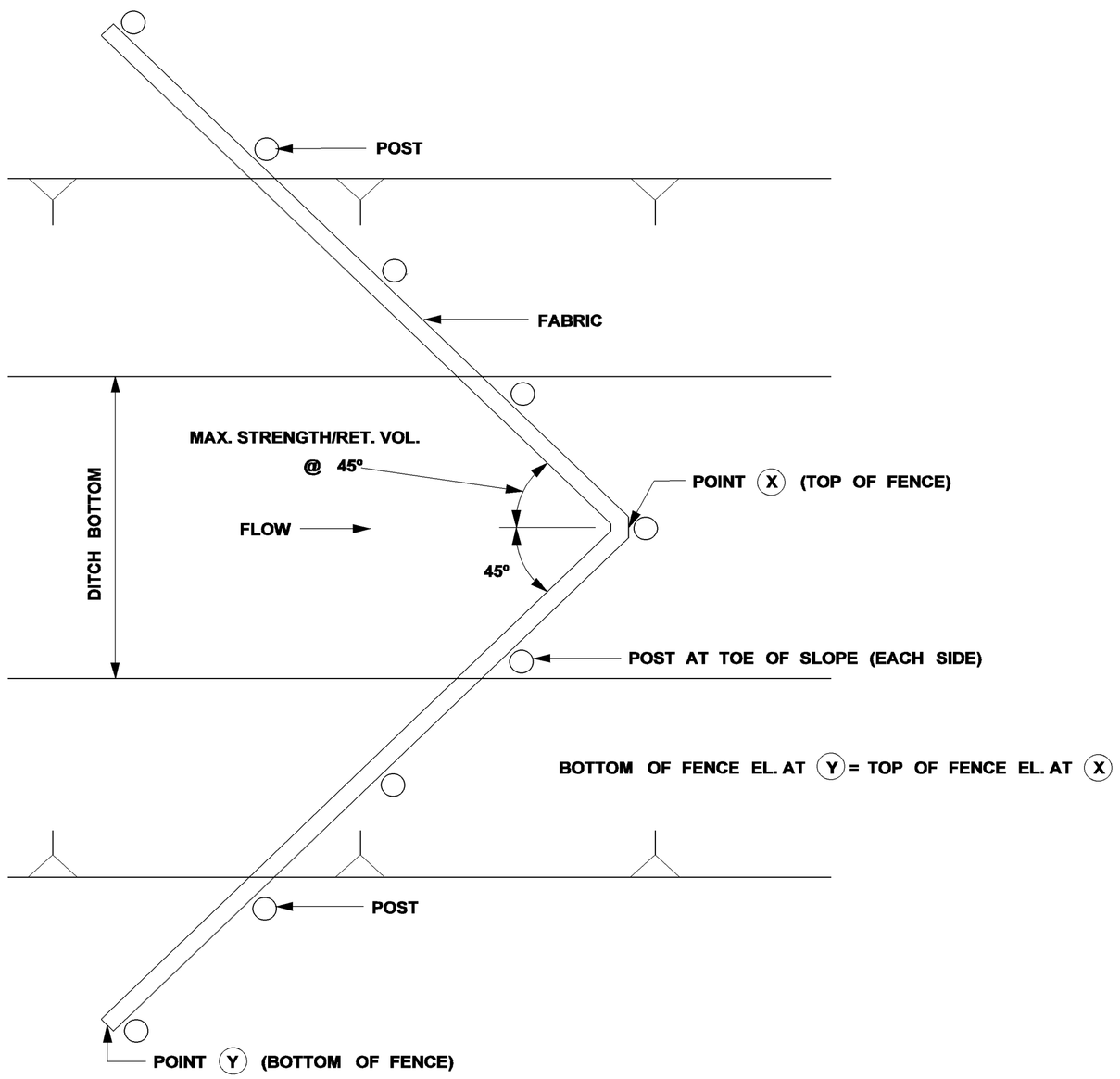

PLAN VIEW

NOTES:

1. ANCHOR AND INSTALL PER DETAILS FOR SILT FENCE SPACING GUIDELINES ON ECD-4
2. A "W" SHAPE MAY BE USED FOR WIDER DITCHES.

SILT FENCE DITCH CHECK SELECTION GUIDELINES

SILT FENCE DITCH CHECKS ARE USED WHERE IT HAS BEEN DETERMINED THAT HAY BALE CHECKS ARE INADEQUATE. SILT FENCE DITCH CHECKS ARE USED TO INTERCEPT LOW VOLUME FLOWS IN LOW TO MODERATE GRADIENT DITCHES.

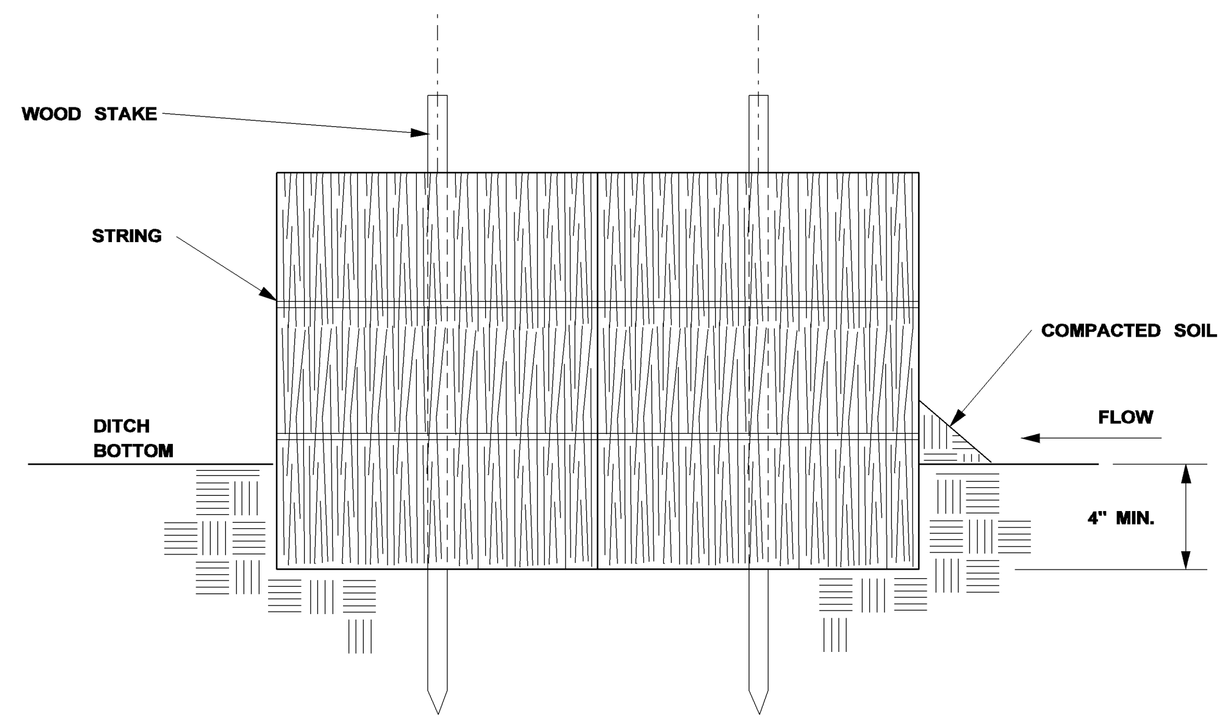

SECTION A-A

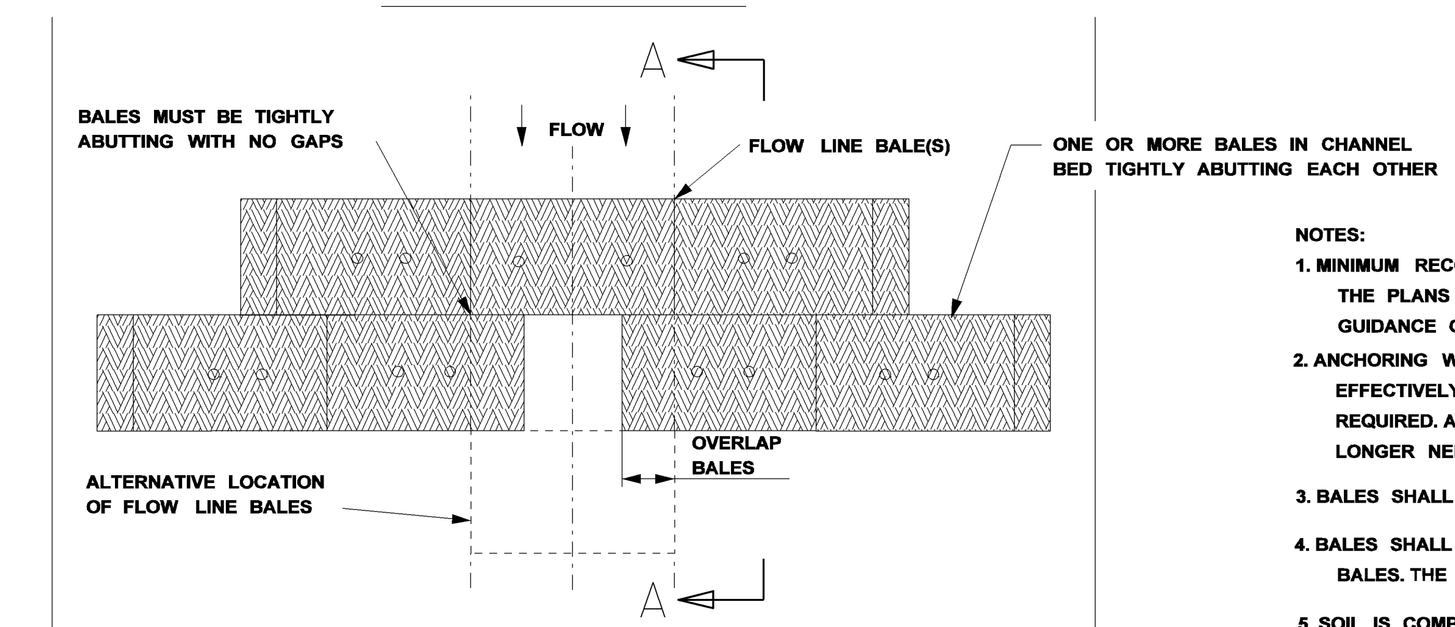

PLAN VIEW
TRAPEZOIDAL DITCH

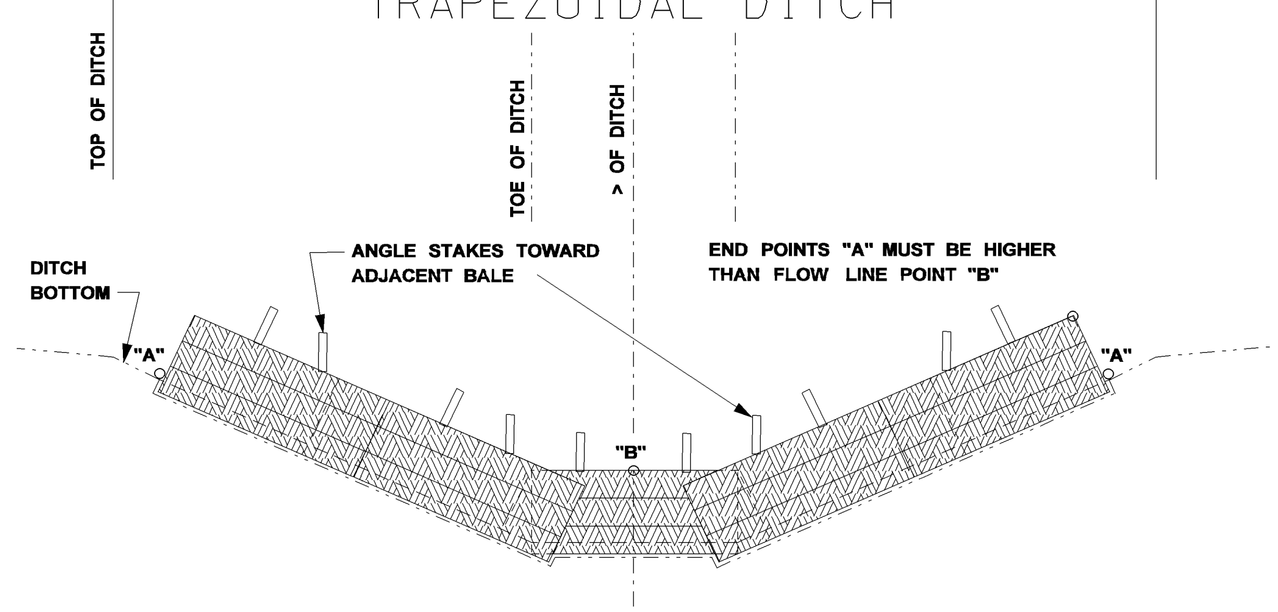

PROFILE VIEW
TRAPEZOIDAL DITCH

NOTES:

1. MINIMUM RECOMMENDED CHECK SPACING IS 100 FEET UNLESS SHOWN OTHERWISE ON THE PLANS OR EROSION CONTROL PLAN APPROVED BY THE ENGINEER, SEE SPACING GUIDANCE ON ECD-4.
2. ANCHORING WOOD STAKES SHALL BE SIZED, SPACED, AND BE OF A MATERIAL THAT EFFECTIVELY SECURES THE CHECK. A MINIMUM OF TWO STAKES PER BALE IS REQUIRED. ALL NON-DEGRADABLE MATERIALS SHALL BE REMOVED WHEN NO LONGER NEEDED.
3. BALES SHALL BE EMBEDDED IN THE SOIL A MIN. OF 4".
4. BALES SHALL BE PLACED IN A ROW WITH ENDS TIGHTLY ABUTTING THE ADJACENT BALES. THE BALES SHALL BE PLACED WITH BINDINGS PARALLEL TO THE GROUND.
5. SOIL IS COMPACTED ALONG THE BASE OF THE UPSTREAM FACE TO PREVENT PIPING.
6. MULTIPLE ADJACENT ROWS OF BALES ARE REQUIRED AS SHOWN.

HAY BALE DITCH CHECK SELECTION GUIDELINES

HAY BALES ARE USED TO INTERCEPT LOW VOLUME FLOWS IN LOW TO MODERATE GRADIENT DITCHES.

DATE	REVISION	BY

MISSISSIPPI DEPARTMENT OF TRANSPORTATION

TEMPORARY EROSION, SEDIMENT AND WATER POLLUTION CONTROL MEASURES, SILT FENCE AND HAY BALE DITCH CHECKS

WORKING NUMBER: ECD-5

SHEET NUMBER

FILENAME: EROSION CONTROL\ECD-5.DGN

DESIGN TEAM ____ CHECKED ____ DATE ____

682 ROADWAY DESIGN DIVISION MISSISSIPPI DEPARTMENT OF TRANSPORTATION
1/28/2010 8:58 AM ECD-5.DGN

STATE	PROJECT NO.
MISS.	

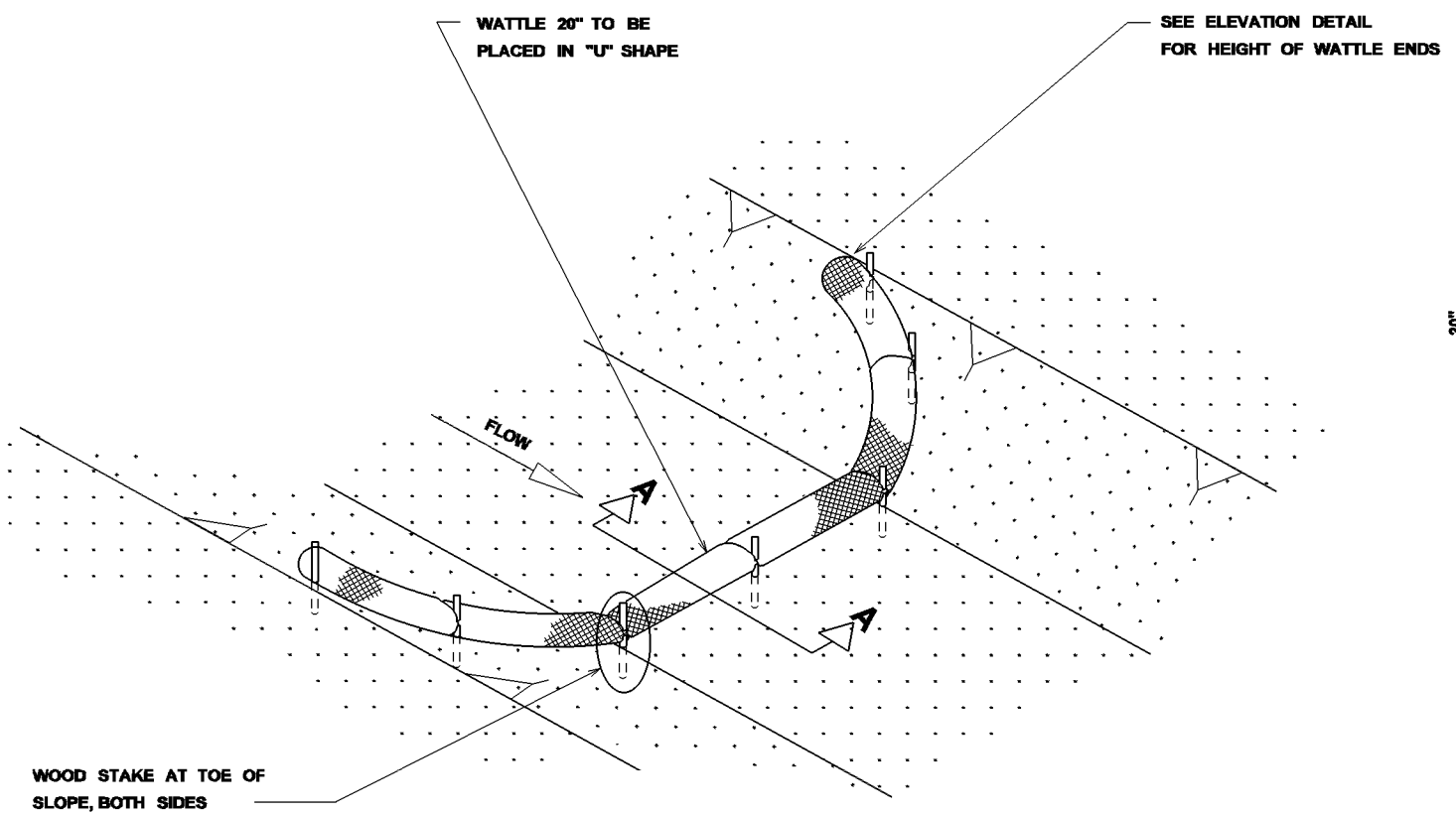

DETAIL (DITCH CHECK)

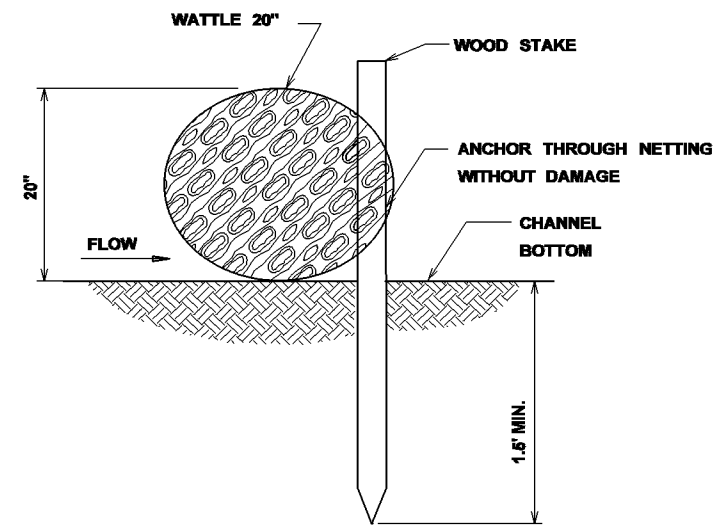

SECTION A-A

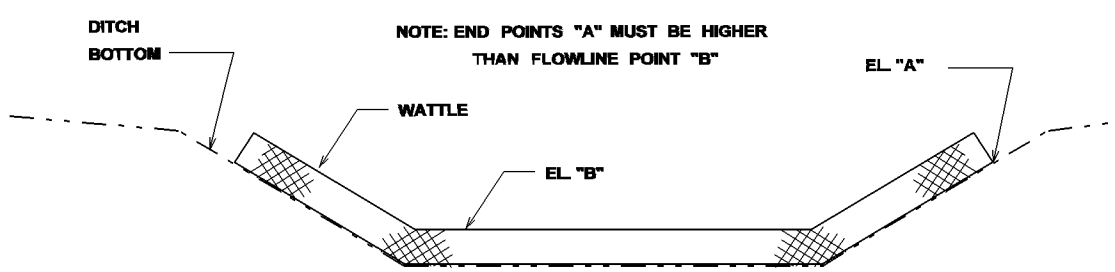

ELEVATION DETAIL

NOTES:

1. MINIMUM RECOMMENDED PLACEMENT INTERVAL BETWEEN WATTLE DITCH CHECK IS 100' UNLESS SHOWN OTHERWISE ON THE PLANS OR EROSION CONTROL PLAN APPROVED BY THE ENGINEER. SEE SPACING GUIDANCE ON ECD-4
2. ANCHORING WOOD STAKES SHALL BE SIZED, SPACED, DRIVEN, AND BE OF A MATERIAL THAT EFFECTIVELY SECURES THE CHECK. STAKE SPACING SHALL BE A MAXIMUM OF THREE FEET. ALL NON-DEGRADABLE MATERIALS SHALL BE REMOVED WHEN NO LONGER NEEDED.
3. TRENCHING OF WATTLES MAY BE NECESSARY IF PIPING BECOMES EVIDENT.
4. WATTLES SHOULD NOT BE USED IN HARD BOTTOM CHANNELS.

WATTLE DITCH CHECK SELECTION GUIDELINES

WATTLE DITCH CHECKS ARE APPROPRIATE FOR VELOCITY REDUCTION AND CONTROL OF SEDIMENT TRANSPORT UNDER LOW TO MEDIUM FLOW CONDITIONS.

DATE	REVISION	BY

MISSISSIPPI DEPARTMENT OF TRANSPORTATION

DETAILS OF EROSION CONTROL
WATTLE DITCH CHECK

WORKING NUMBER
ECD-6
SHEET NUMBER

FILENAME: EROSION CONTROL\ECD-6.DGN
DESIGN TEAM ____ CHECKED ____ DATE ____

PLAN
ROADWAY DESIGN DIVISION
MISSISSIPPI DEPARTMENT OF TRANSPORTATION

290

1/19/2010 1:21 PM ECD-6.DGN

STATE	PROJECT NO.
MISS.	

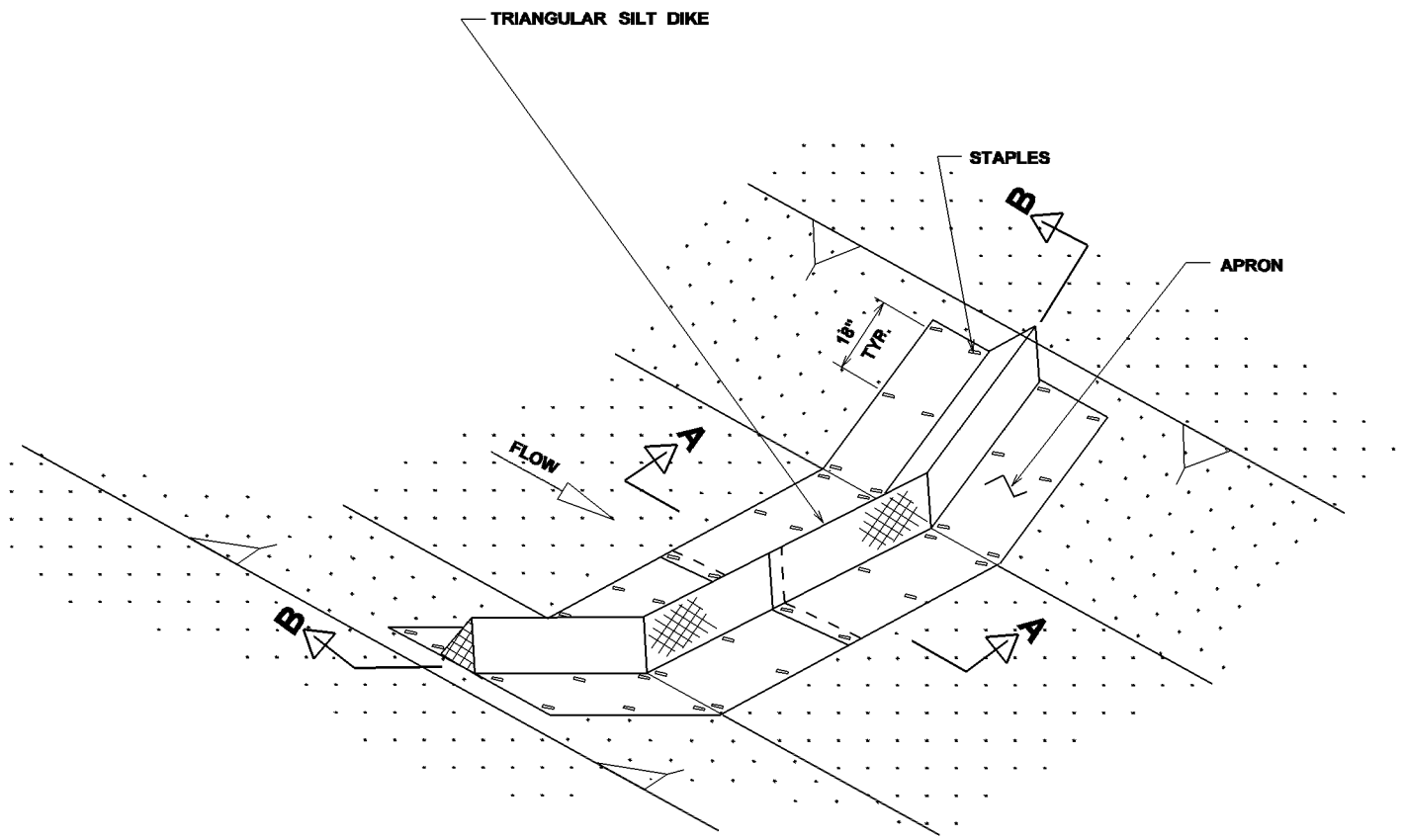

PLAN VIEW

SILT DIKE DITCH CHECK SELECTION GUIDELINES

SILT DIKES CAN BE USED IN DITCHES WITH CONCENTRATED FLOWS WITHIN THE CLEAR ZONE WHERE RIPRAP CAN NOT BE USED.

NOTE:

1. MINIMUM RECOMMENDED PLACEMENT INTERVAL BETWEEN SILT DIKE DITCH CHECK IS 100' UNLESS SHOWN OTHERWISE ON THE PLANS OR EROSION CONTROL PLAN APPROVED BY THE ENGINEER. SEE SPACING GUIDANCE ON ECD-4
2. INSTALLATION SHALL BE IN ACCORDANCE WITH MANUFACTURERS RECOMMENDATIONS.

POINT "A" MUST BE HIGHER THAN POINT "B" TO ENSURE THAT WATER FLOWS OVER THE DIKE AND NOT AROUND THE ENDS

SECTION B-B

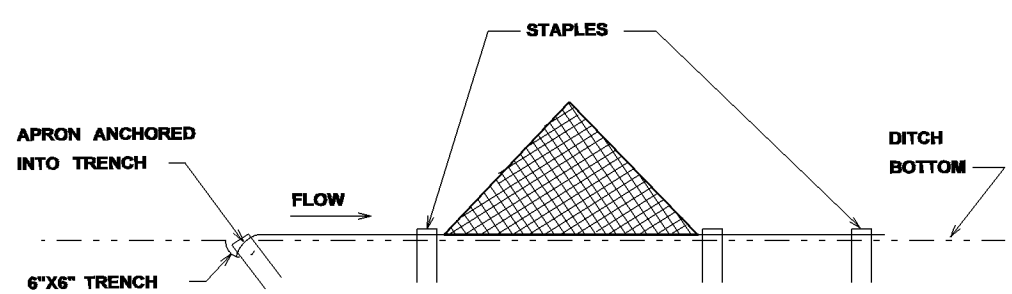

NOTE: STAPLES SHALL BE PLACED WHERE THE UNITS OVERLAP AND IN THE CENTER OF THE UNIT

SECTION A-A

SILT DIKE INSTALLATION FOR ROADWAY DITCHES

REVISION	BY	DATE

MISSISSIPPI DEPARTMENT OF TRANSPORTATION

DETAILS OF EROSION CONTROL
SILT DIKE DITCH CHECK

FILENAME: EROSION CONTROL\ECD-7.DGN

DESIGN TEAM _____ CHECKED _____ DATE _____

WORKING NUMBER
ECD-7
SHEET NUMBER

PLAN
ROADWAY DESIGN DIVISION
MISSISSIPPI DEPARTMENT OF TRANSPORTATION
1/20/2010 8:11 AM ECD-7.DGN

STATE	PROJECT NO.
MISS.	

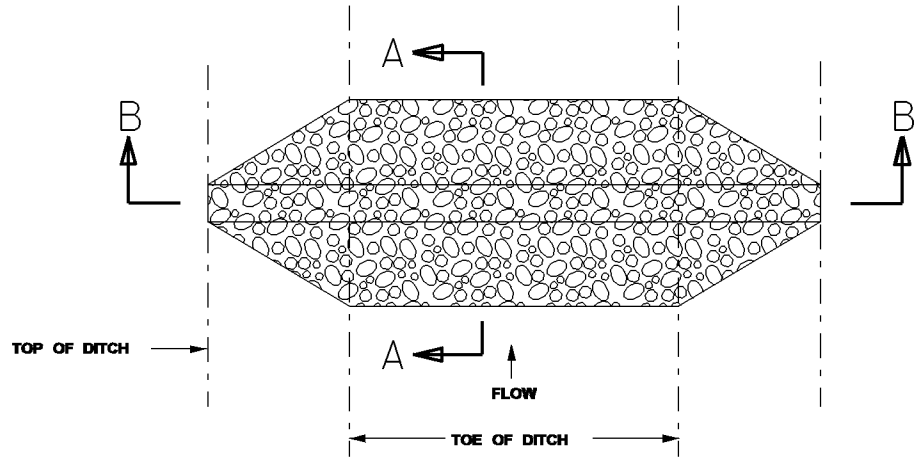

PLAN VIEW

DETAIL FOR TRAPEZOIDAL DITCH

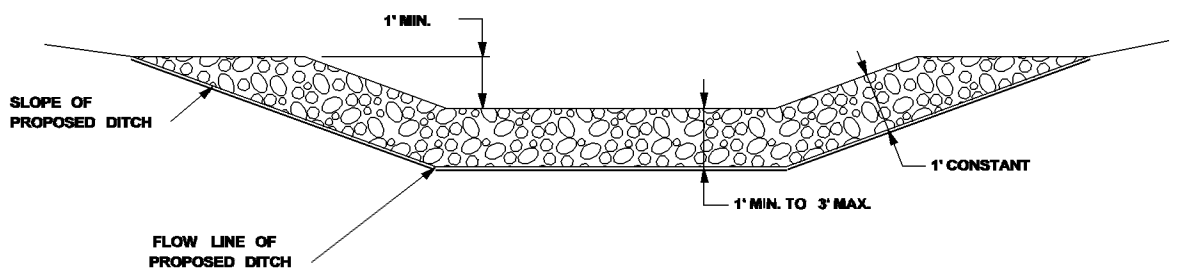

SECTION B-B

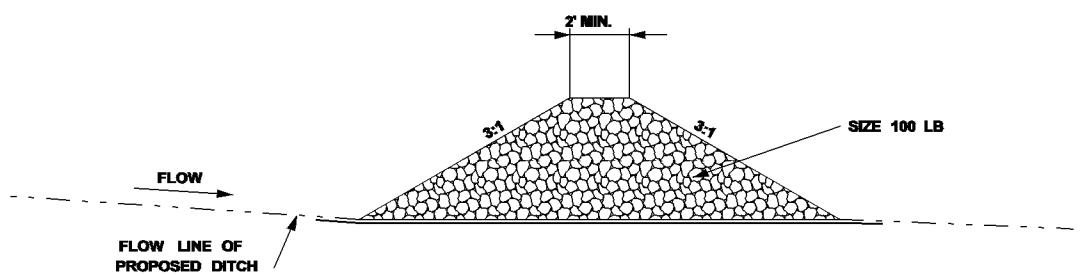

SECTION A-A

TEMPORARY ROCK DITCH CHECKS IN ROADSIDE DITCHES

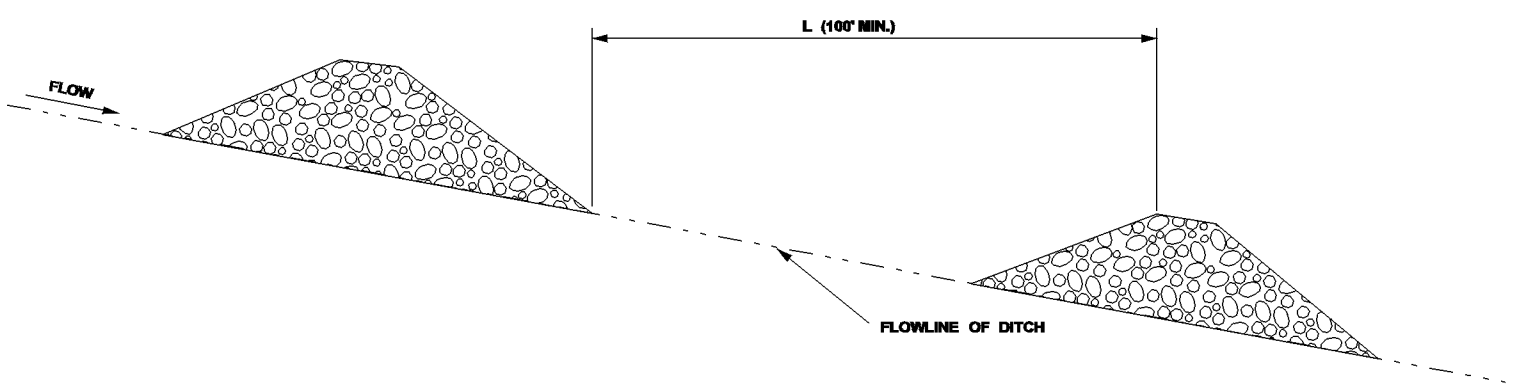

DETAIL FOR SPACING BETWEEN DITCH CHECKS

NOTES:

1. MINIMUM SPACING FOR ROCK DITCH CHECKS SHALL BE 100 FEET OR EROSION CONTROL PLAN APPROVED BY THE ENGINEER. SEE SPACING GUIDANCE ON ECD-4
2. ROCK DITCH CHECKS MAY ALSO BE CHOKED WITH FABRIC.
3. SIZE 300 LB RIP RAP MAY BE USED FOR SPECIFED APPLICATIONS AS SHOWN ON EROSION CONTROL PLAN

REVISION	BY	DATE

MISSISSIPPI DEPARTMENT OF TRANSPORTATION

ROCK DITCH CHECK

WORKING NUMBER ECD-8

SHEET NUMBER

FILENAME: EROSION CONTROL\ECD-8.DGN

DESIGN TEAM _____ CHECKED _____ DATE _____

292

PLAN
ROADWAY DESIGN DIVISION
MISSISSIPPI DEPARTMENT OF TRANSPORTATION

1/19/2010 12:22PM ECD-8.DGN

STATE	PROJECT NO.
MISS.	

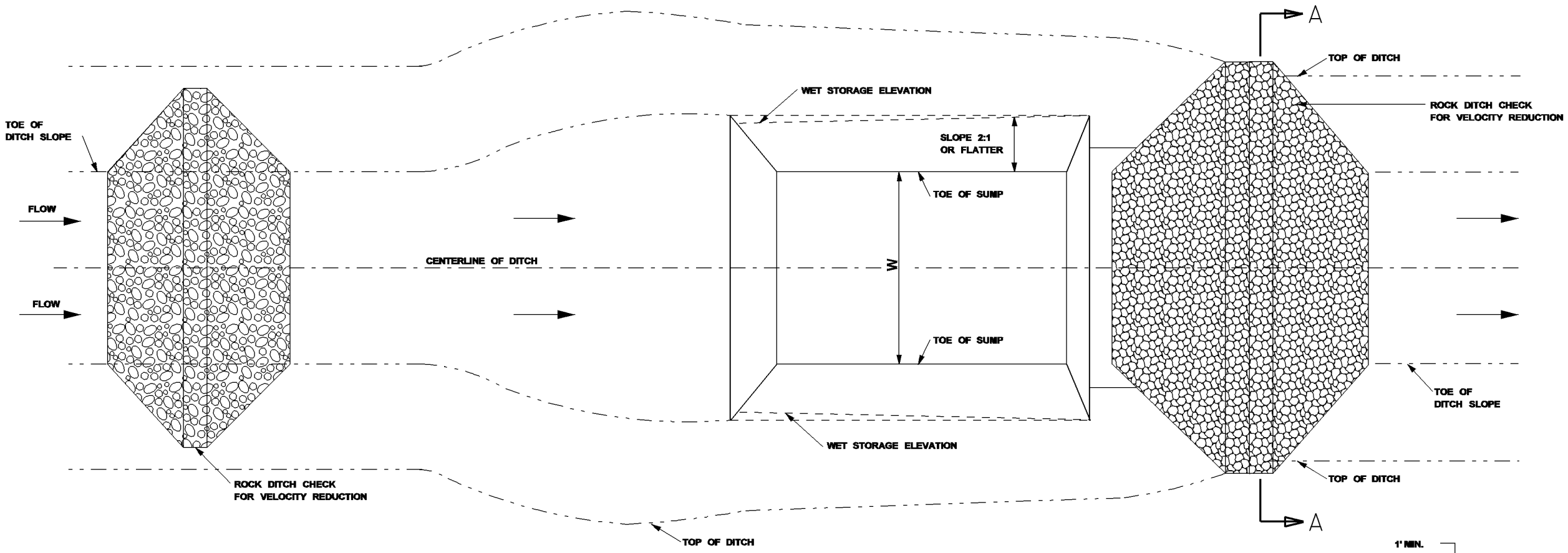

PLAN VIEW

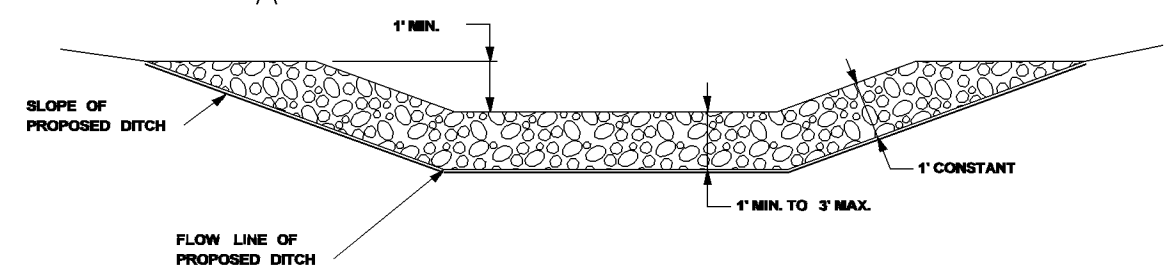

SECTION A-A

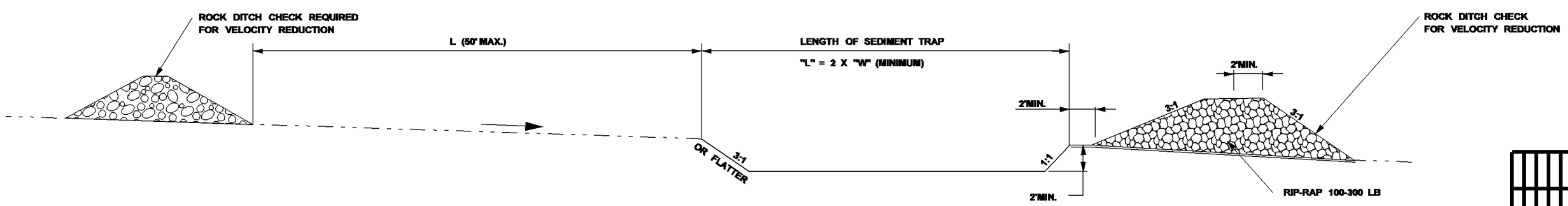

PROFILE VIEW

BY	REVISION	DATE

MISSISSIPPI DEPARTMENT OF TRANSPORTATION

ROCK DITCH CHECK
WITH SUMP EXCAVATION

FILENAME: EROSION CONTROL\ECD-9.DGN

DESIGN TEAM _____ CHECKED _____ DATE _____

WORKING NUMBER
ECD-9
SHEET NUMBER

STATE	PROJECT NO.
MISS.	

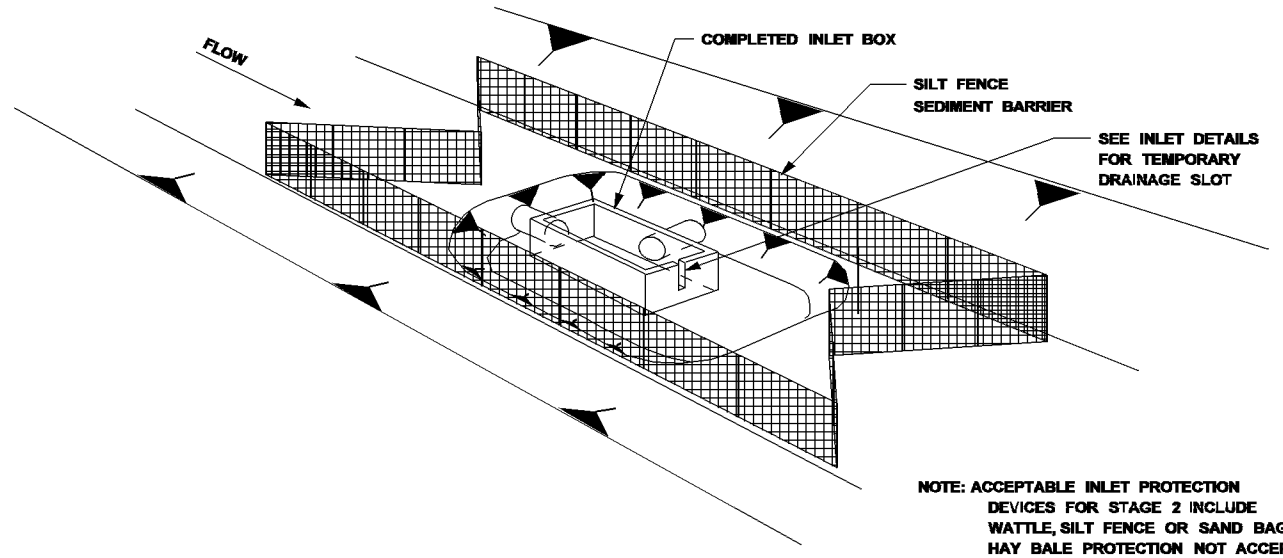

NOTE: ACCEPTABLE INLET PROTECTION DEVICES FOR STAGE 2 INCLUDE WATTLE, SILT FENCE OR SAND BAGS. HAY BALE PROTECTION NOT ACCEPTABLE DURING THIS PHASE.

STAGE 2

INLET/JUNCTION BOX CONSTRUCTED BUT NOT BACKFILLED

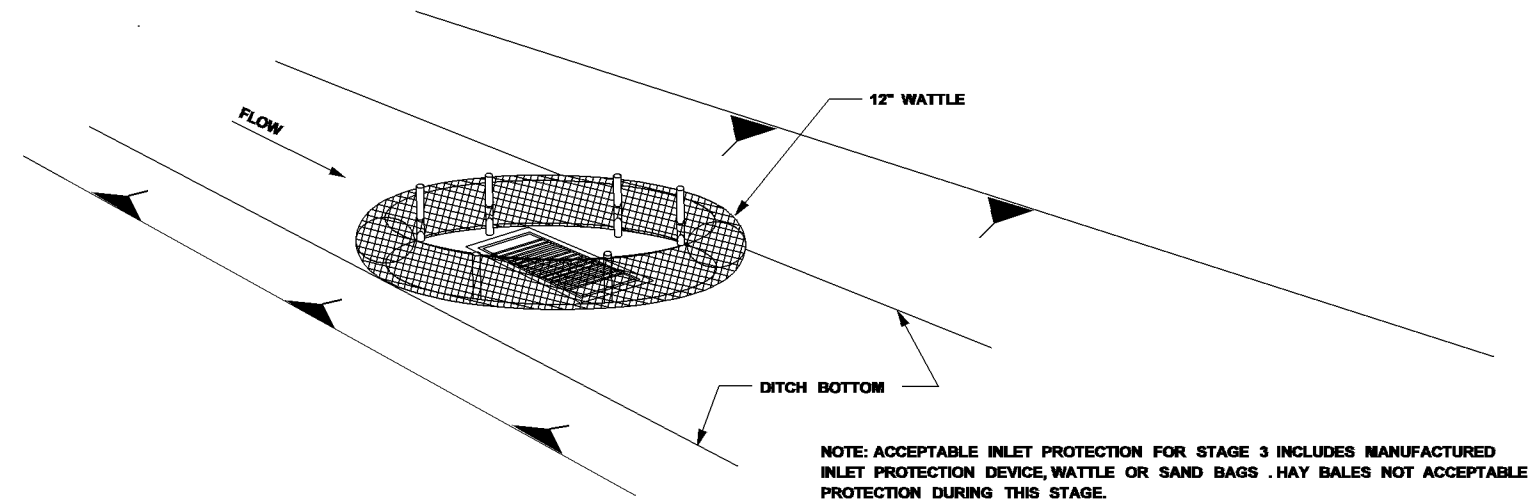

NOTE: ACCEPTABLE INLET PROTECTION FOR STAGE 3 INCLUDES MANUFACTURED INLET PROTECTION DEVICE, WATTLE OR SAND BAGS . HAY BALES NOT ACCEPTABLE PROTECTION DURING THIS STAGE.

STAGE 3

INLET CONSTRUCTED AND BACKFILLED

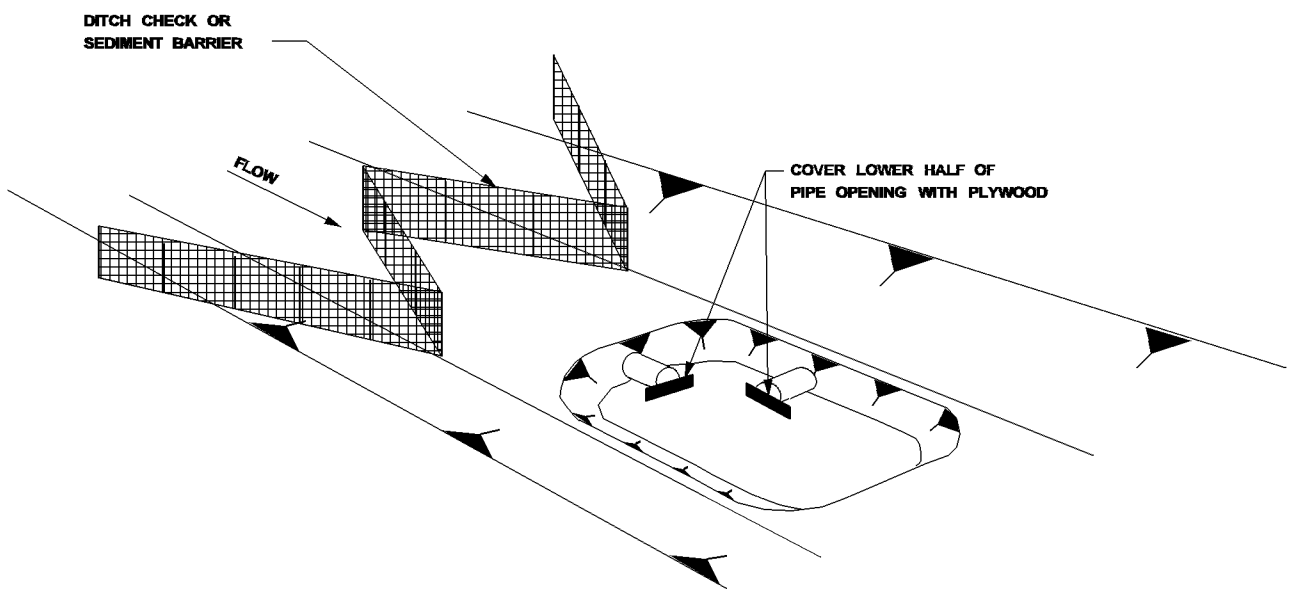

STAGE 1

INLET/JUNCTION BOX LOCATION EXCAVATED

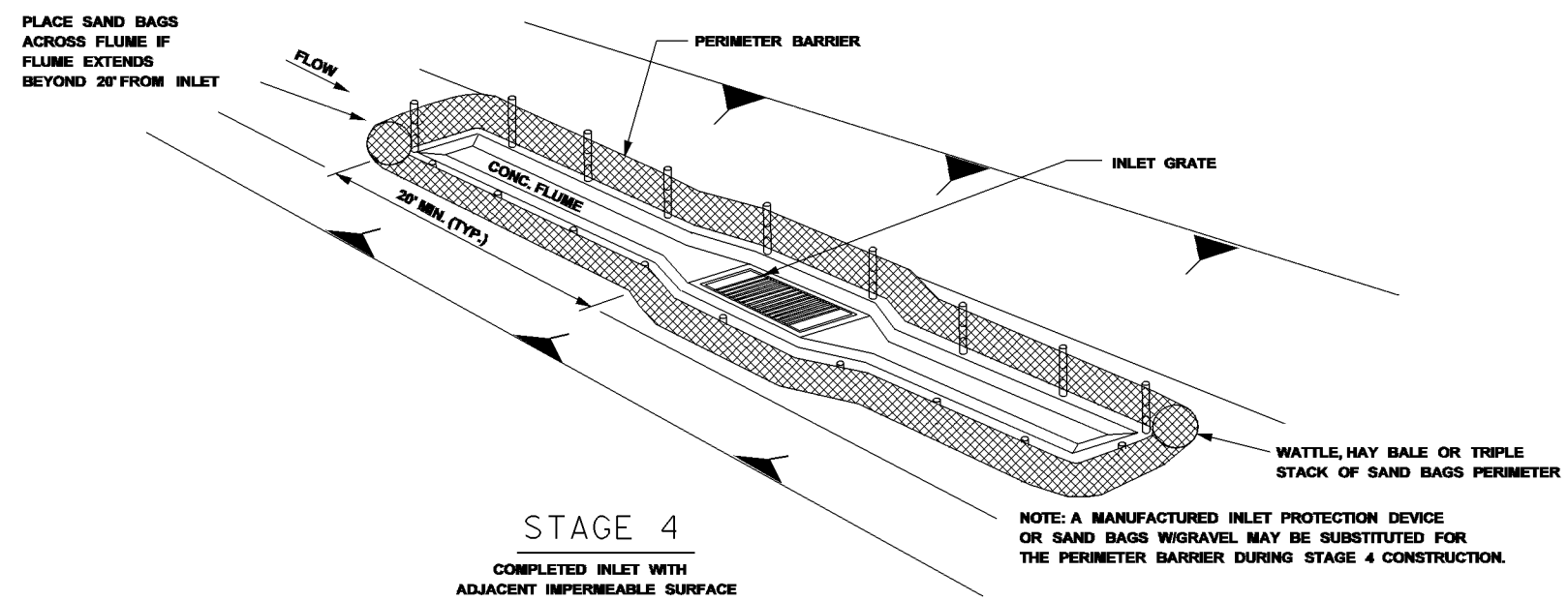

NOTE: A MANUFACTURED INLET PROTECTION DEVICE OR SAND BAGS W/GRAVEL MAY BE SUBSTITUTED FOR THE PERIMETER BARRIER DURING STAGE 4 CONSTRUCTION.

STAGE 4

COMPLETED INLET WITH ADJACENT IMPERMEABLE SURFACE

DITCH INLET CONSTRUCTION STAGES

NOTES:

1. FOUNDATION BACKFILL SHOULD BE PLACED IN STAGE 1 IMMEDIATELY AFTER PIPE INSTALLATION. INLET CONSTRUCTION SHOULD COMMENCE AS SOON AS POSSIBLE AND BE CONTINUOUS THROUGH COMPLETION.
2. CONFIGURATIONS MAY BE ADJUSTED WITH APPROVAL OF THE ENGINEER FOR TRAVELWAY SAFETY, WATER FLOW, SOIL OR INSTALLATION CHALLENGES.
3. DURING STAGE 1 AND STAGE 2, SILT FENCE MAY BE REQUIRED UPSLOPE OF THE INLET EXCAVATION AS DIRECTED BY THE ENGINEER.
4. IF SILT FENCING IS INSTALLED AROUND THE INLET EXCAVATION IT SHOULD BE PLACED IN A CONFIGURATION THAT WILL ALLOW INLET CONSTRUCTION.

DATE	REVISION	BY

MISSISSIPPI DEPARTMENT OF TRANSPORTATION

INLET PROTECTION
TYPICAL APPLICATIONS AND DETAILS

FILENAME: EROSION CONTROL\ECD-10.DGN

DESIGN TEAM _____ CHECKED _____ DATE _____

WORKING NUMBER
ECD-10
SHEET NUMBER

PLAN
ROADWAY DESIGN DIVISION
MISSISSIPPI DEPARTMENT OF TRANSPORTATION
1/19/2010 12:24PM ECD-10.DGN

STATE	PROJECT NO.
MISS.	

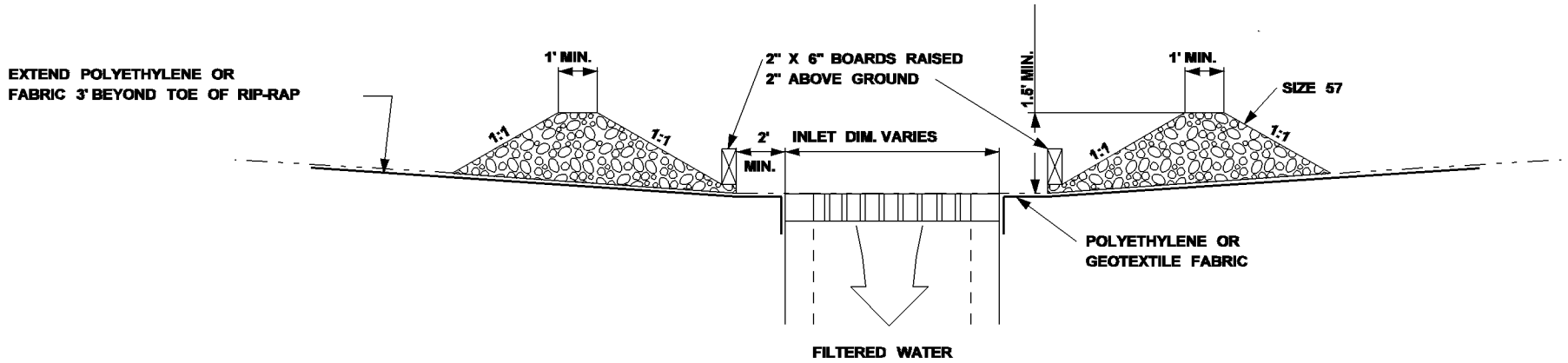

SECTION B-B

NOTES:

1. THE ELEVATION OF THE TOP OF THE REQUIRED STONE BERM SHALL BE A MINIMUM OF 1.5' ABOVE THE ELEVATION OF THE INLET WORKING POINT AND A MINIMUM OF 6" BELOW THE ELEVATION OF THE OUTSIDE EDGE OF THE INSIDE SHOULDER.

2. THIS COARSE AGGREGATE INLET PROTECTION SHALL NOT BE UTILIZED DURING STAGE 1 AND STAGE 2 INLET CONSTRUCTION. SEE INLET PROTECTION TYPICAL APPLICATIONS AND DETAILS)

3. 2" X 6" BOARDS MAY BE REPLACED WITH WIRE MESH W/OPENINGS LESS THAN 1" X 1". COST IS ABSORBED.

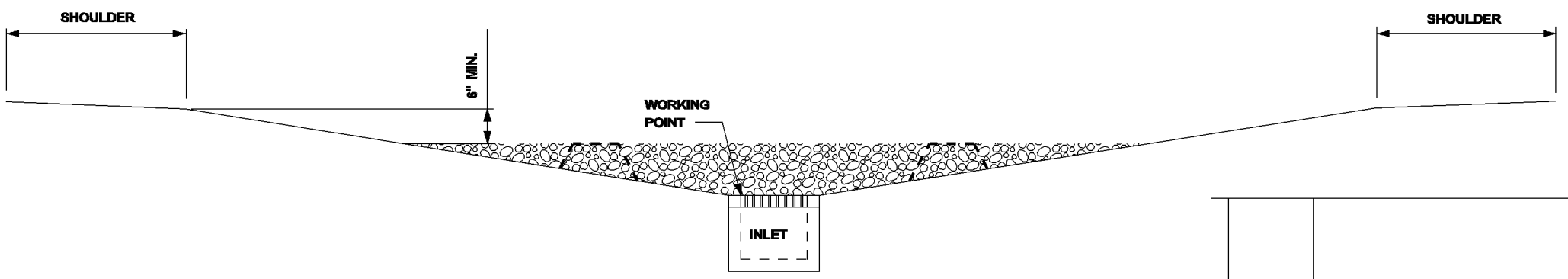

SECTION A-A

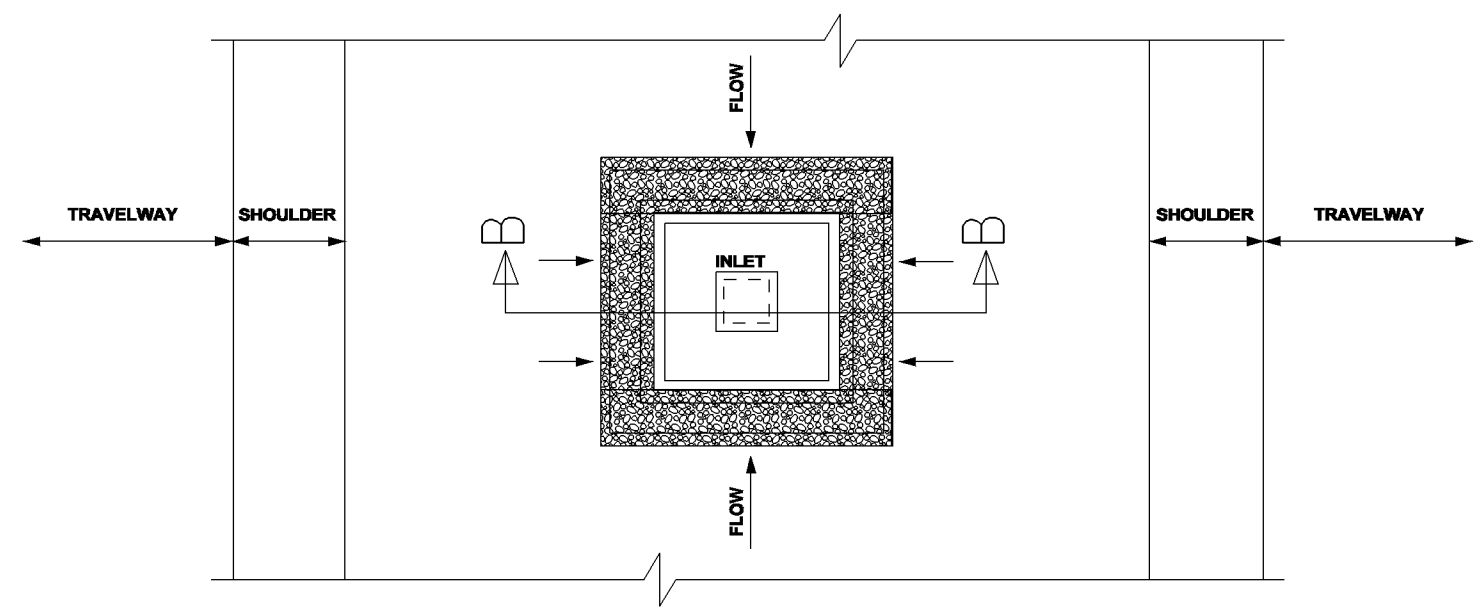

PLAN - IN SAG

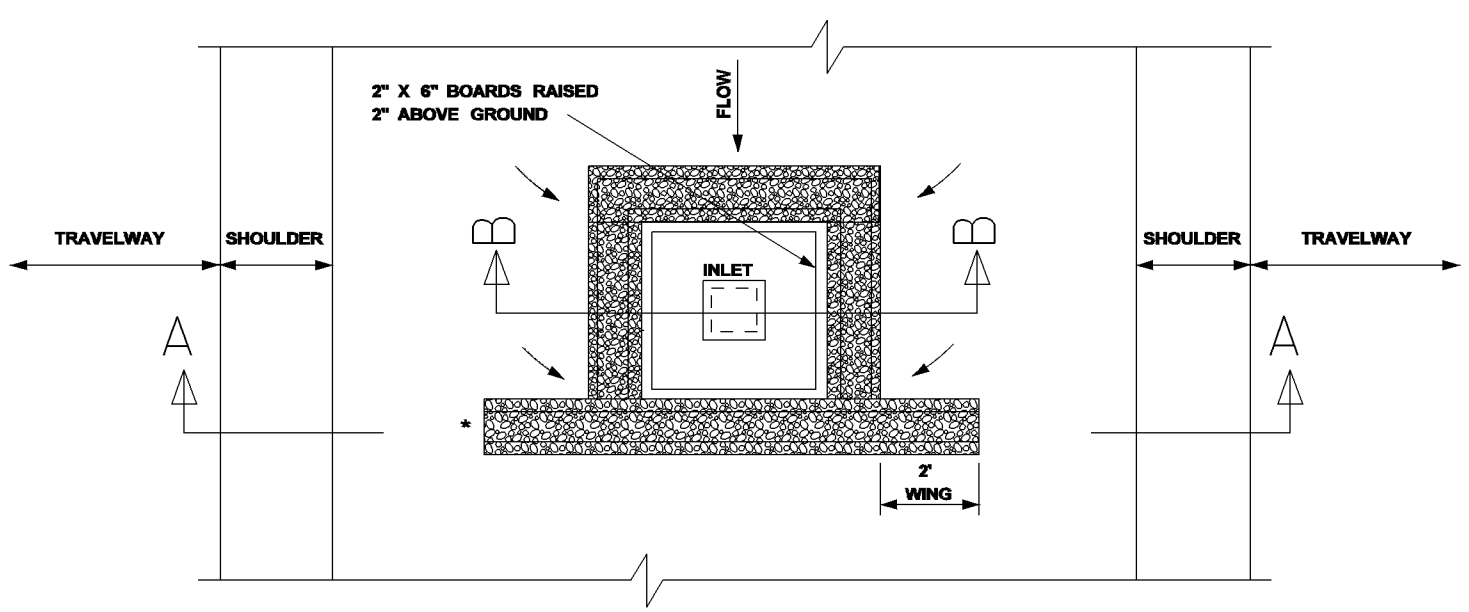

PLAN - ON GRADE

* CONSTRUCT WINGS TO PREVENT BYPASS

DATE	REVISION	BY	MISSISSIPPI DEPARTMENT OF TRANSPORTATION INLET PROTECTION DETAILS FOR COARSE AGGREGATE ON GRADES & SAGS
			WORKING NUMBER ECD-11
			SHEET NUMBER
			FILENAME: EROSION CONTRL\ECD-11.DGN DESIGN TEAM_____ CHECKED_____ DATE_____

PLAN
ROADWAY DESIGN DIVISION
MISSISSIPPI DEPARTMENT OF TRANSPORTATION
1/19/2010 12:25PM ECD-11.DGN

STATE	PROJECT NO.
MISS.	

NOTE:
SILT FENCE OR SAND BAGS MAY ALSO BE USED FOR THIS APPLICATION.
HAY BALES NOT ACCEPTABLE DURING THIS STAGE.

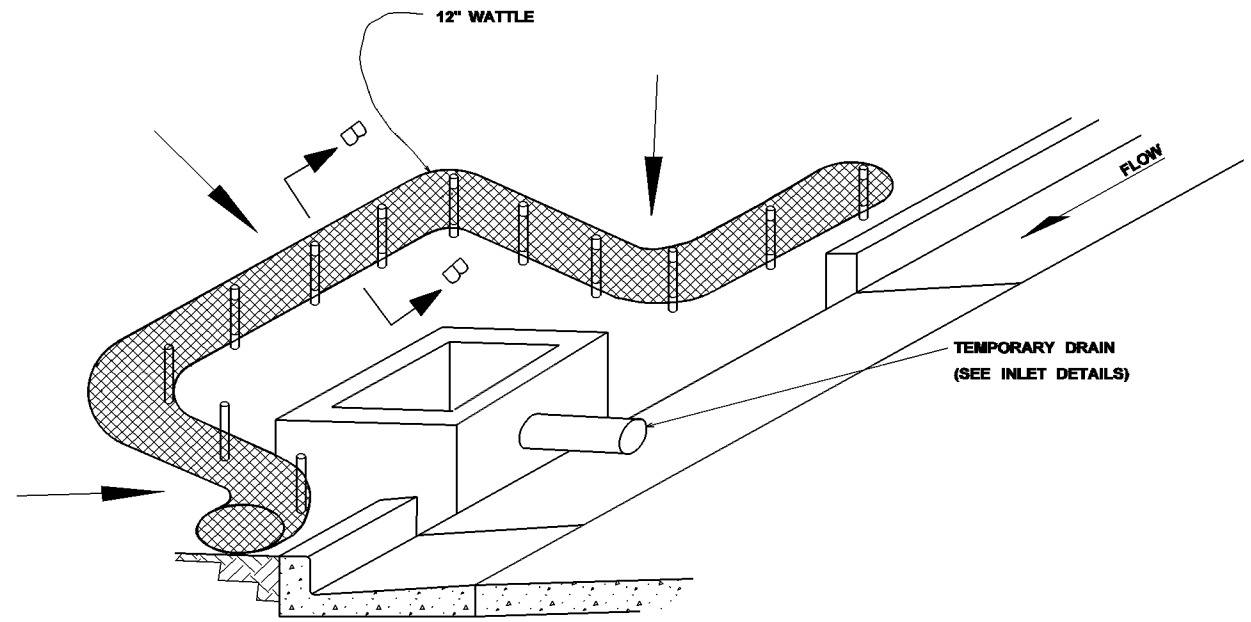

CURB INLET PROTECTION (STAGE 2)

SINGLE OR DOUBLE WING INLET

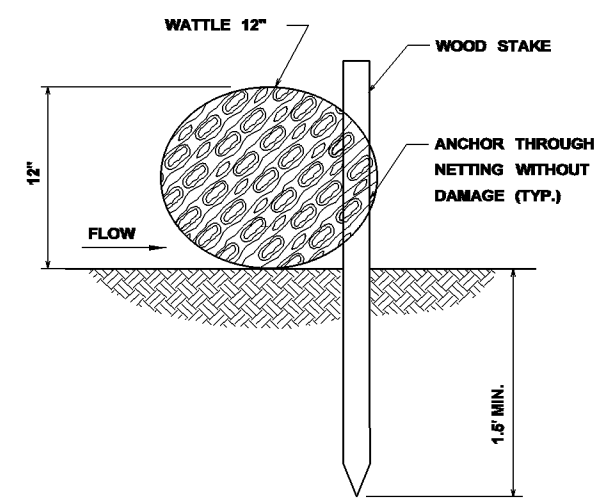

SECTION B-B

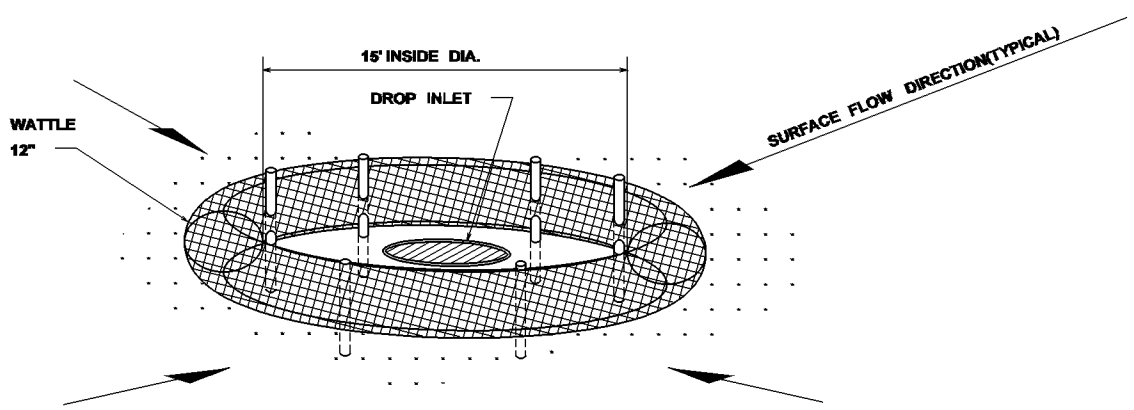

DROP INLET PROTECTION

NOTES:

1. ANCHORING STAKES SHALL BE SIZED, SPACED, AND BE OF A MATERIAL THAT EFFECTIVELY SECURES THE WATTLE. STAKE SPACING SHALL BE A MAXIMUM OF THREE FEET.
2. OVERLAP ENDS OF WATTLES PER MANUFACTURERS RECOMMENDATIONS (1'MIN.,3'MAX.).
3. TRENCHING OF WATTLES MAY BE NECESSARY IF PIPING BECOMES EVIDENT.

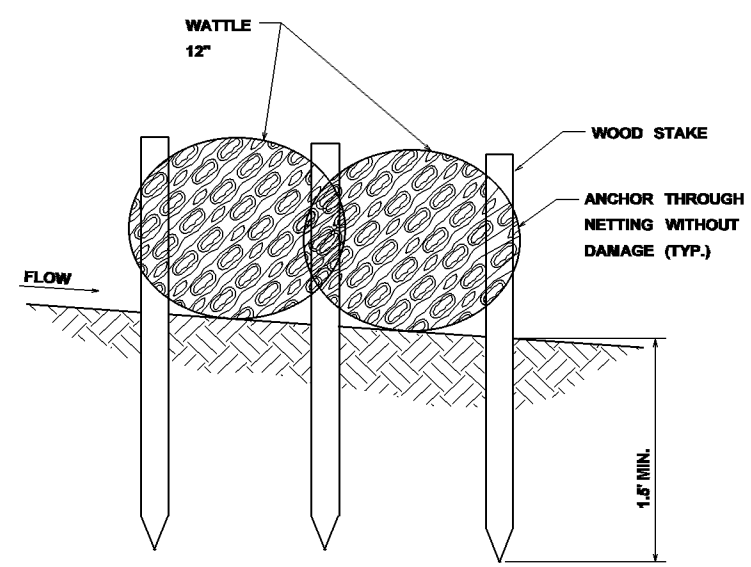

SECTION A-A

BY	REVISION	DATE

MISSISSIPPI DEPARTMENT OF TRANSPORTATION

INLET PROTECTION DETAILS
OF WATTLES

WORKING NUMBER
ECD-12
SHEET NUMBER

FILENAME: EROSION CONTROL\ECD-12.DGN
DESIGN TEAM _____ CHECKED _____ DATE _____

STATE	PROJECT NO.
MISS.	

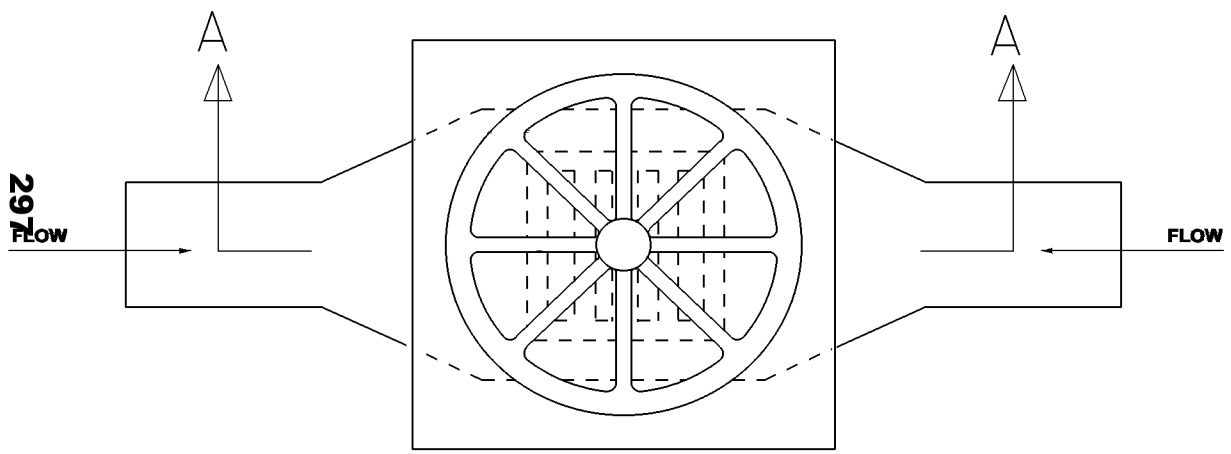

PLAN

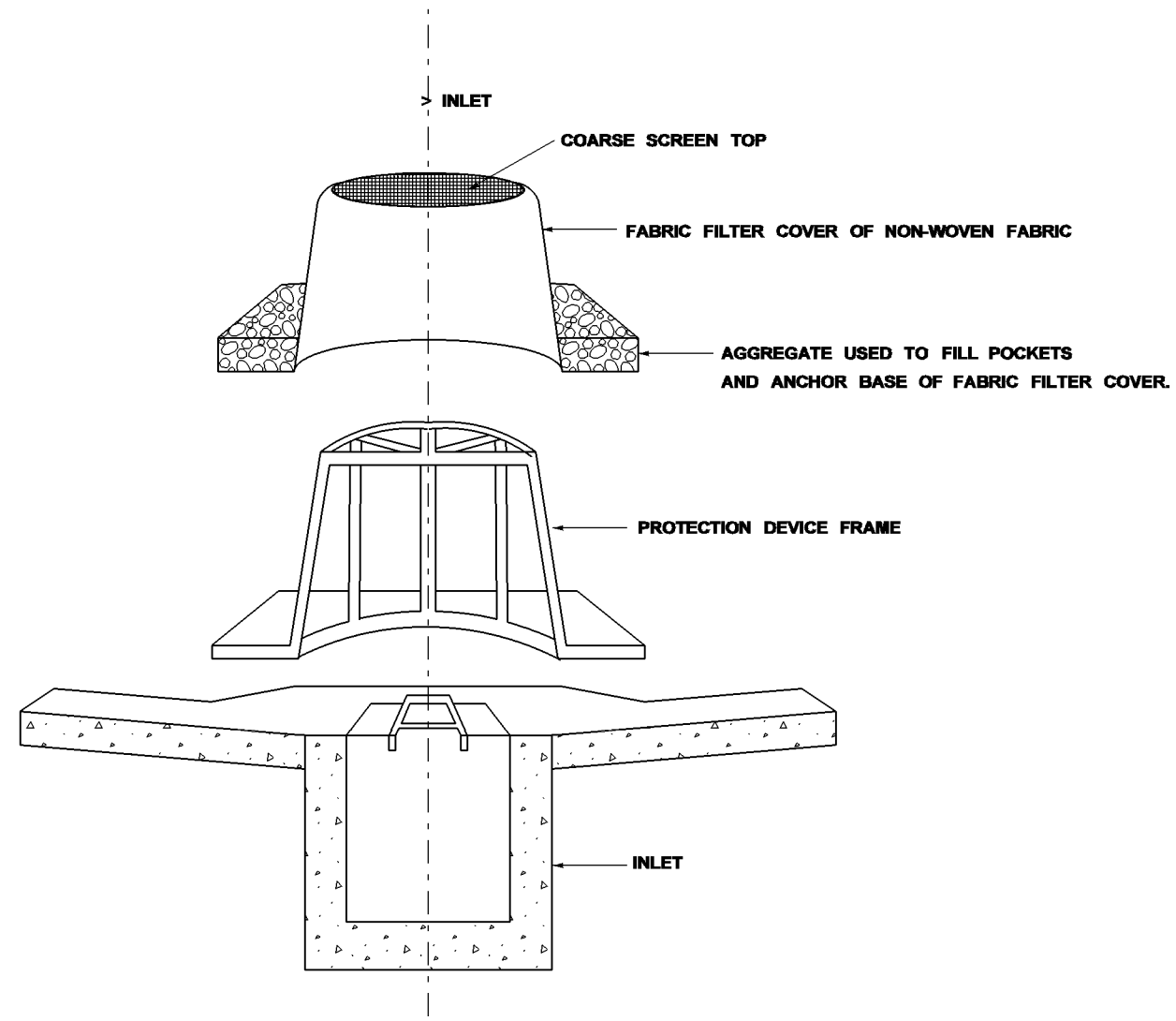

SECTION "A-A"

NOTES:

1. FRAMES WITH EITHER SQUARE OR CIRCULAR BASES MAY BE USED. SELECTED FRAME BASE SHOULD PROVIDE BEST SEAL AROUND INLET AS DIRECTED BY THE ENGINEER.
2. FILL POCKETS AROUND BASE OF FILTER COVER WITH #57 STONE OR SOIL. STONE IS REQUIRED WHEN ANCHORING THE MANUFACTURED INLET PROTECTION DEVICE OVER PAVED DITCH OR FLUME.
3. USE ONLY DURING STAGE 3 OR STAGE 4 INLET CONSTRUCTION.
4. FOR MEDIAN INLET PROTECTION, THE ELEVATION OF THE COARSE SCREEN TOP SHOULD BE A MINIMUM OF 6" BELOW THE ELEVATION OF THE OUTSIDE EDGE OF THE INSIDE SHOULDER.

297

PLAN
ROADWAY DESIGN DIVISION
MISSISSIPPI DEPARTMENT OF TRANSPORTATION

1/20/2010 9:32 AM ECD-13.DGN

REVISION	BY	MISSISSIPPI DEPARTMENT OF TRANSPORTATION INLET PROTECTION DETAILS OF MANUFACTURED INLET PROTECTION DEVICE	WORKING NUMBER ECD-13
	DATE	FILENAME: EROSION CONTROL\ECD-13.DGN DESIGN TEAM ____ CHECKED ____ DATE ____	SHEET NUMBER

STATE	PROJECT NO.
MISS.	

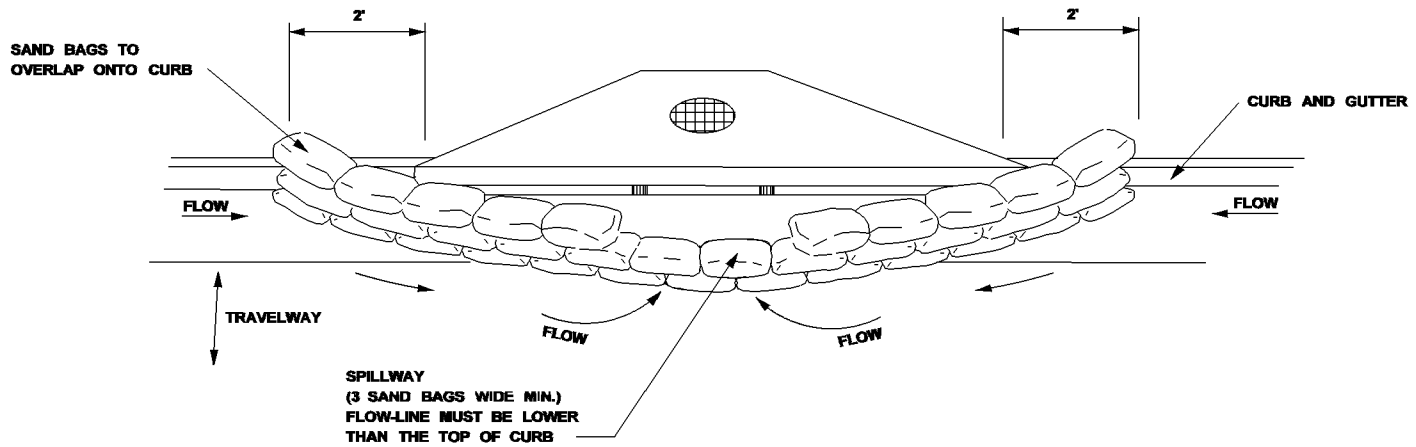

TYPICAL (SAND BAG) PROTECTION FOR INLET IN SAG

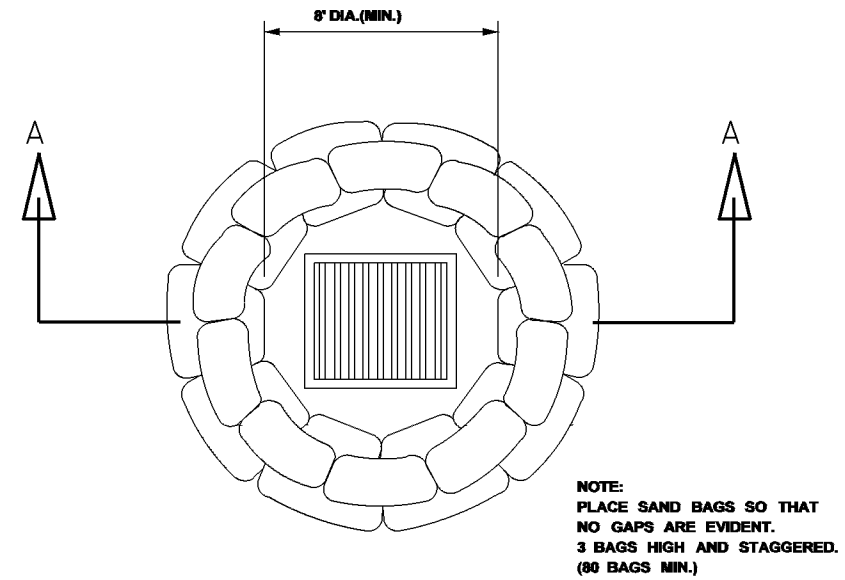

DROP INLET
PLAN VIEW

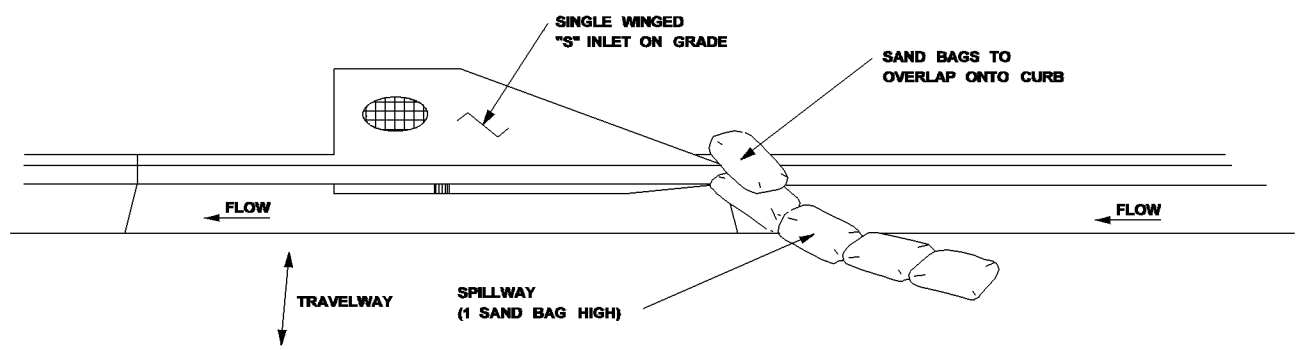

TYPICAL (SAND BAG) PROTECTION FOR INLET ON GRADE

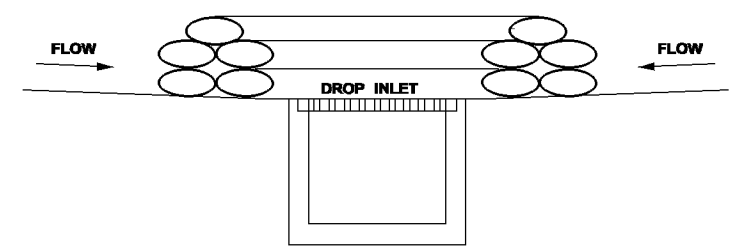

SECTION A-A
SAND BAG BARRIER

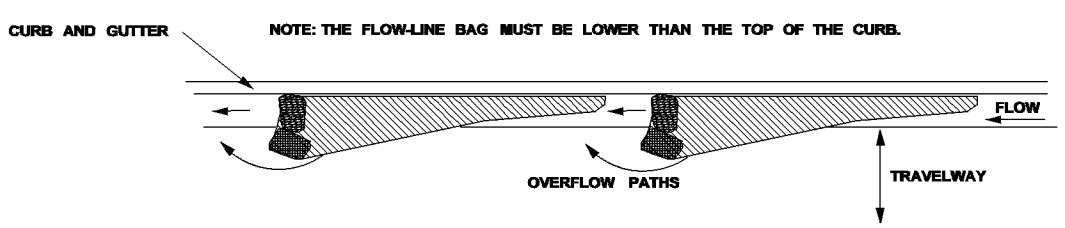

CURB AND GUTTER SEDIMENT
CONTAINMENT SYSTEM

CURB INLET PROTECTION NOTES:

1. THIS CURB INLET PROTECTION METHOD CAN BE USED DURING ANY STAGE OF BASE AND PAVEMENT CONSTRUCTION.
2. BAG HEIGHT AND NUMBER OF BAGS SHOULD BE BASED ON CURB HEIGHT AND USE OF TRAVELWAY.
3. SEDIMENT SHOULD BE CONTROLLED PRIOR TO ENTERING GUTTER. GUTTER CHECKS AND INLET PROTECTION ARE FOR SECONDARY CONTROL.
4. REMOVE ACCUMULATED SEDIMENT AFTER EVERY RAINFALL. SWEEP SEDIMENT FROM HARD SURFACES AND DISPOSE OF APPROPRIATELY AWAY FROM INLETS AND/OR WATER BODIES.
5. IF DENUDED AREAS EXIST BEHIND THE INLET, A SEDIMENT BARRIER SHOULD BE INSTALLED AROUND IT'S PERIMETER TO CONTROL SEDIMENT.

DATE	REVISION	BY

MISSISSIPPI DEPARTMENT OF TRANSPORTATION

INLET PROTECTION
DETAILS OF SAND BAG

WORKING NUMBER
ECD-14

SHEET NUMBER

FILENAME: EROSION CONTROL\ECD-14.DGN
DESIGN TEAM_____ CHECKED_____ DATE_____

PLAN
ROADWAY DESIGN DIVISION
MISSISSIPPI DEPARTMENT OF TRANSPORTATION
1/20/2010 9:33 AM ECD-14.DGN

STATE	PROJECT NO.
MISS.	

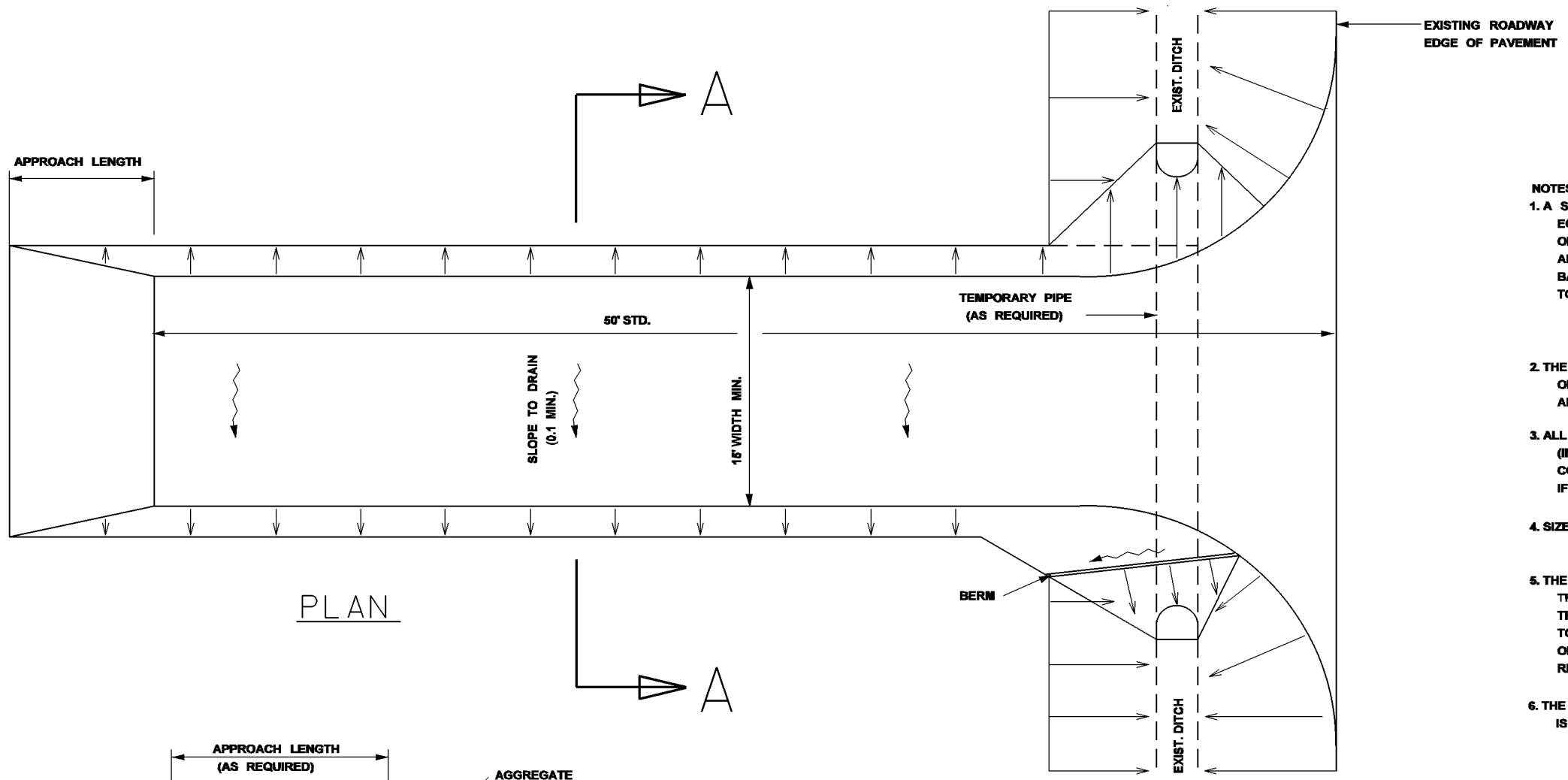

PLAN

NOTES:

1. A STABILIZED CONSTRUCTION ENTRANCE SHALL BE CONSTRUCTED AT POINTS OF EGRESS FROM UNSTABILIZED AREAS OF THE PROJECT TO PUBLIC ROADS WHERE OFFSITE TRACKING OF MUD COULD OCCUR. TRAFFIC FROM UNSTABILIZED AREAS OF THE PROJECT SHALL BE DIRECTED THRU THE STABILIZED ENTRANCE. BARRIERS, FLAGGING, OR OTHER POSITIVE MEANS SHALL BE USED AS REQUIRED TO LIMIT AND DIRECT VEHICULAR EGRESS ACROSS THE STABILIZED ENTRANCE.

2. THE CONTRACTOR MAY PROPOSE AN ALTERNATIVE TECHNIQUE TO MINIMIZE OFFSITE TRACKING OF SEDIMENT. THE ALTERNATIVE MUST BE REVIEWED AND APPROVED BY THE ENGINEER PRIOR TO IT'S USE.

3. ALL MATERIALS SPILLED, DROPPED, OR TRACKED ONTO PUBLIC ROADS (INCLUDING THE STABILIZED CONSTRUCTION ENTRANCE AGGREGATE AND CONSTRUCTION MUD) SHALL BE REMOVED DAILY, OR MORE FREQUENTLY IF SO DIRECTED BY THE ENGINEER.

4. SIZE 1 STABILIZER AGGREGATE SHALL BE USED

5. THE STABILIZED CONSTRUCTION ENTRANCE SHALL BE MAINTAINED IN A CONDITION THAT WILL ALLOW IT TO PERFORM IT'S FUNCTION TO PREVENT OFFSITE TRACKING, THE STABILIZED CONSTRUCTION ENTRANCE SHALL BE RINSED WHEN NECESSARY TO MOVE ACCUMULATED MUD DOWNWARD THRU THE STONE. ADDITIONAL STABILIZATION OF THE VEHICULAR ROUTE LEADING TO THE STABILIZED ENTRANCE MAY BE REQUIRED TO LIMIT THE MUD TRACKED.

6. THE NOMINAL SIZE OF A STANDARD STABILIZED CONSTRUCTION ENTRANCE IS 15' X 50' UNLESS OTHERWISE SHOWN IN THE EROSION CONTROL PLAN

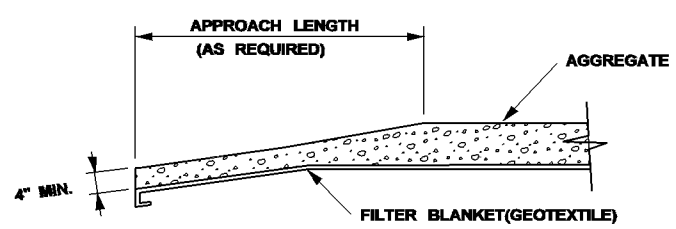

TRANSITION DETAIL

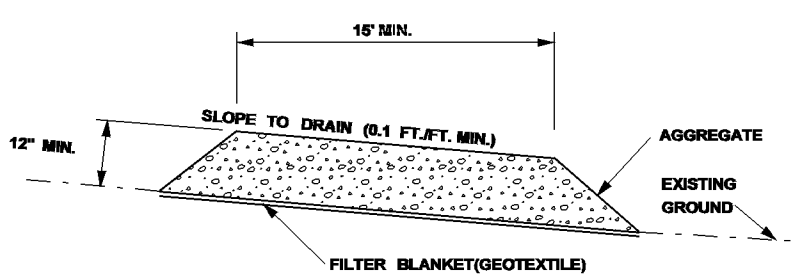

SECTION A-A

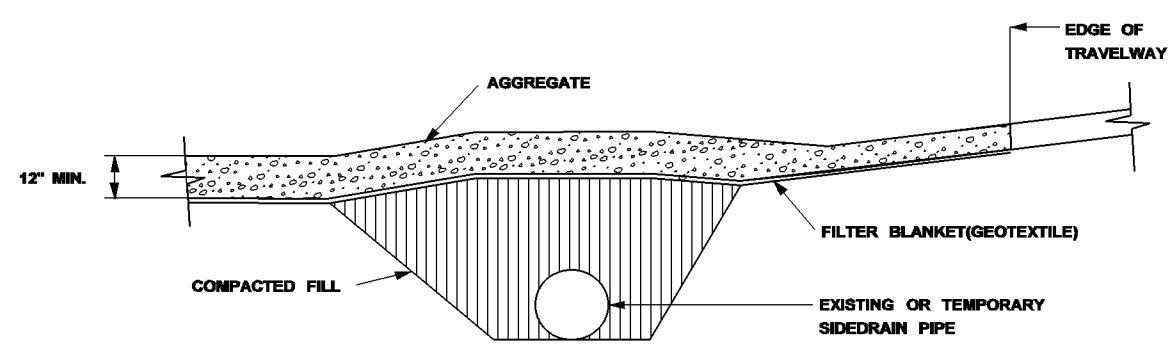

RURAL CONNECTION DETAIL

REVISION	BY	DATE

MISSISSIPPI DEPARTMENT OF TRANSPORTATION

STABILIZED CONSTRUCTION ENTRANCE

WORKING NUMBER ECD-15

SHEET NUMBER

FILENAME: EROSION CONTROL\ECD-15.DGN

DESIGN TEAM _____ CHECKED _____ DATE _____

299

PLAN
ROADWAY DESIGN DIVISION
MISSISSIPPI DEPARTMENT OF TRANSPORTATION

1/20/2010 9:34 AM ECD-15.DGN

STATE	PROJECT NO.
MISS.	

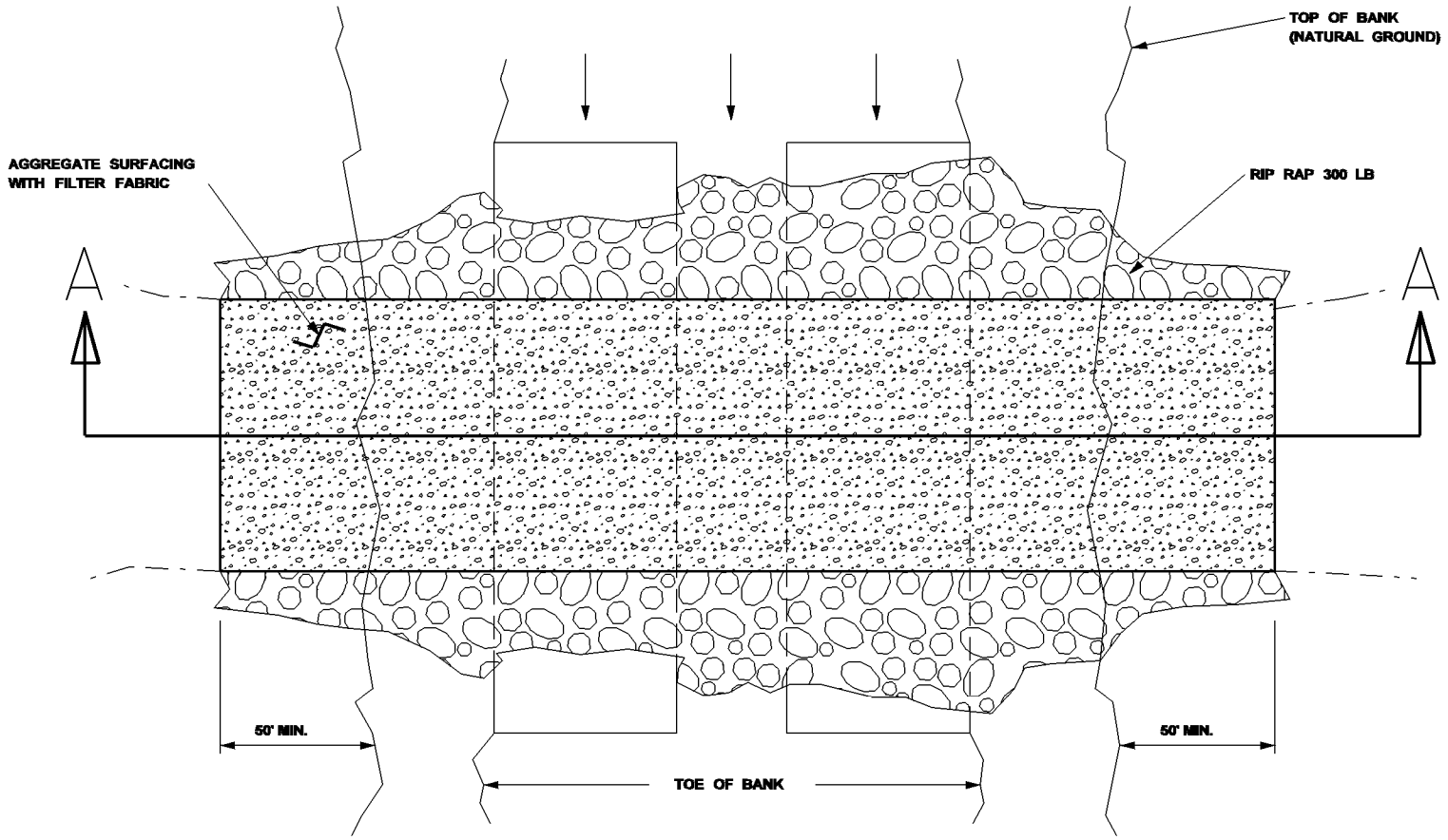

PLAN VIEW

TEMPORARY CULVERT STREAM CROSSING

NOTES:

1. TEMPORARY CULVERT STREAM CROSSINGS PROVIDE A MEANS FOR VEHICLES AND EQUIPMENT TO SAFELY CROSS A WATERCOURSE WHILE MINIMIZING DAMAGE TO THE CHANNEL AND/OR BANKS.

2. TEMPORARY CULVERT STREAM CROSSINGS, WHEN PERMITTED BY THE ENGINEER, SHALL BE CONSTRUCTED TO SAFELY PASS EXPECTED MEAN WATER FLOW OF THE STREAM FOR THE TIME OF YEAR AND LENGTH OF TIME THAT THEY ARE INSTALLED.

3. TEMPORARY STREAM CROSSINGS SHALL BE DESIGNED TO ENSURE STRUCTURAL INTEGRITY AND STABILITY, AND MAINTAIN NORMAL DOWNSTREAM FLOWS. THE USE OF INSTREAM CROSSINGS AND INSTREAM AGGREGATE FILL SHALL BE MINIMIZED TO THE EXTENT PRACTICABLE.

4. A CONTINUOUS PROGRAM OF EFFECTIVE EROSION AND SEDIMENT CONTROL MEASURES SHALL BE IMPLEMENTED PRIOR TO AND CONCURRENT WITH ANY TYPE OF CONSTRUCTION ACTIVITY WITHIN THE BANKS OF A STREAM. WHEN A CROSSING IS NO LONGER NEEDED, THE STREAMBED AND STREAM BANKS SHALL BE RESTORED TO PRE-DISTURBANCE CONDITIONS, OR SUCH A CONDITION THAT PROVIDES SUBSTANTIALLY EQUIVALENT PROTECTION OF WATER QUALITY.

5. LOCATIONS OR TYPES OF TEMPORARY CULVERT STREAM CROSSINGS WILL NOT BE SHOWN ON THE PLANS AS REQUIRED ITEMS .

6. THE CONTRACTOR MAY PROPOSE OTHER OPTIONS FOR TEMPORARY STREAM CROSSINGS SUCH AS STEEL/TIMBER BRIDGE OR MATS.

7. THE DETAILS PROVIDED DEPICT A TYPICAL TEMPORARY CULVERT STREAM CROSSING.

8. TEMPORARY STREAM CROSSINGS WILL NOT BE MEASURED FOR SEPERATE PAYMENT. ALL COSTS FOR MATERIALS, LABOR, EQUIPMENT, CONSTRUCTION, REMOVAL AND MAINTENANCE SHALL BE ABSORBED IN OTHER ITEMS OF WORK

TEMPORARY CULVERT STREAM CROSSING

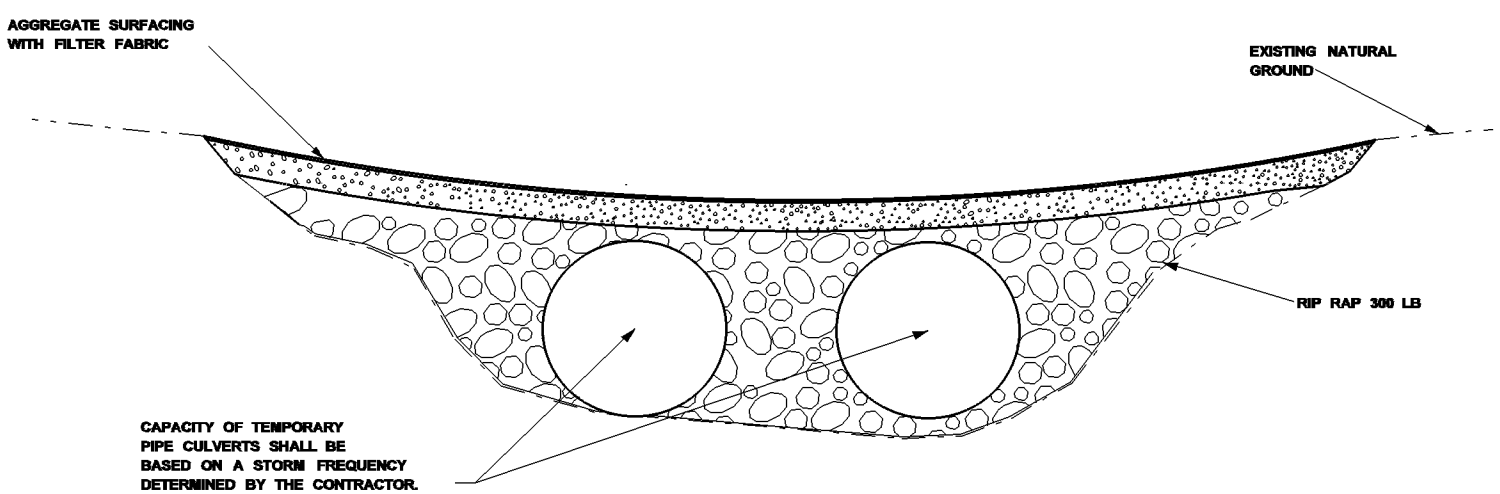

SECTION A-A

REVISION	BY	DATE

MISSISSIPPI DEPARTMENT OF TRANSPORTATION

TEMPORARY CULVERT
STREAM CROSSING

FILENAME: EROSION CONTROL\ECD-16.DGN

DESIGN TEAM _____ CHECKED _____ DATE _____

WORKING NUMBER
ECD-16
SHEET NUMBER

300

PLAN
ROADWAY DESIGN DIVISION
MISSISSIPPI DEPARTMENT OF TRANSPORTATION

1/20/2010 9:34 AM ECD-16.DGN

STATE	PROJECT NO.
MISS.	

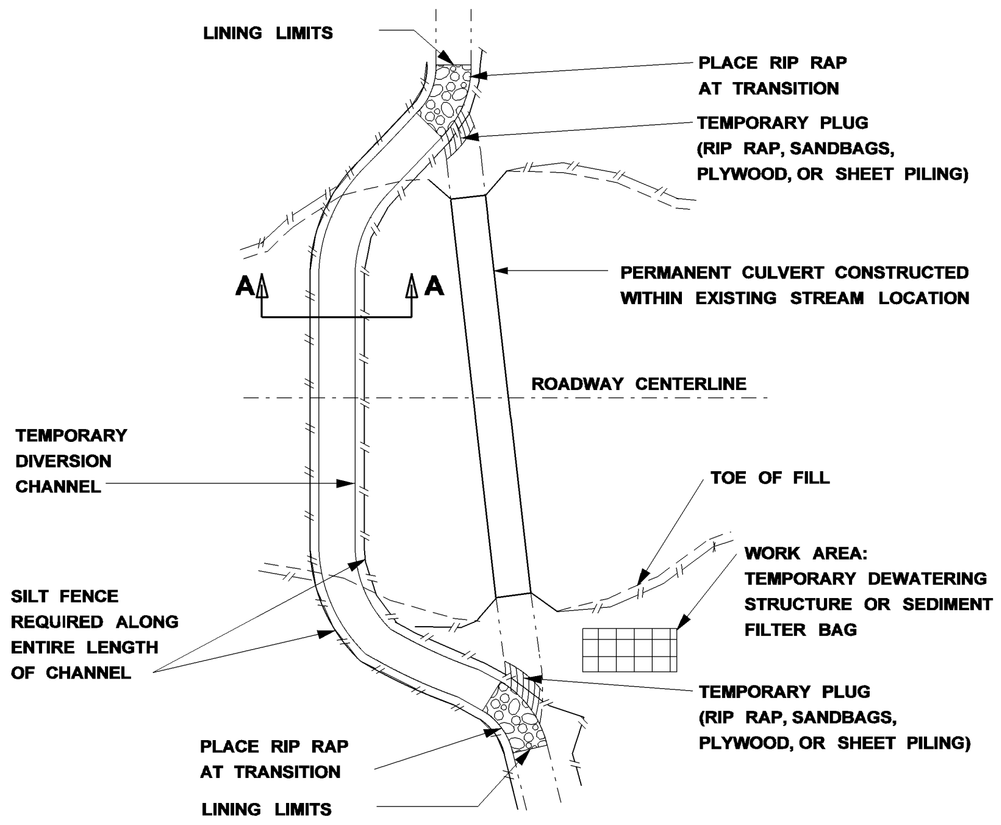

CULVERT CONSTRUCTED WITHIN EXISTING STREAM

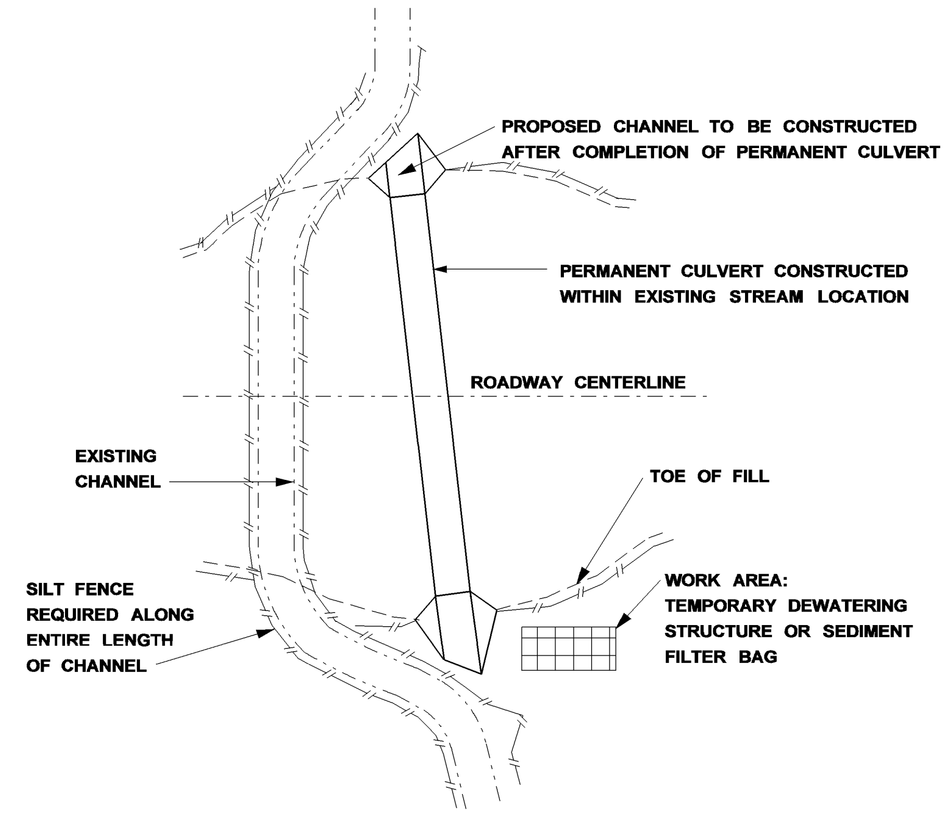

CULVERT CONSTRUCTED OUTSIDE EXISTING STREAM

NOTES:

1. TEMPORARY DIVERSION CHANNELS MAY BE USED TO DIVERT NORMAL STREAM PATH FLOW FROM AN ERODIBLE AREA UNTIL SUCH AREAS CAN BE STABILIZED.
2. TYPE III FILTER FABRIC OR PRE-FAB DITCH LINER MAY BE USED FOR CHANNEL LINING.
3. RIP-RAP WITH FILTER FABRIC MAY BE USED FOR CHANNEL FLOW VELOCITIES OF 3.0 FPS TO 9.0 FPS. THE RIP-RAP SHALL BE SIZED 300 LB
4. LOCATIONS OR TYPES OF TEMPORARY DIVERSION WILL NOT BE SHOWN ON THE PLANS
5. DIVERSION CHANNEL SHALL BE STABILIZED AND INSPECTED BY THE ENGINEER BEFORE FLOW IS DIVERTED.
6. DURING CONSTRUCTION OF DIVERSION CHANNEL, DAMAGE TO THE EXISTING STREAM, CANOPY REMOVAL, AND DEPTH OF THE CHANNEL CONSTRUCTION SHALL BE MINIMIZED.
7. CONSTRUCTION OF THE CHANNEL RELOCATIONS AND CULVERTS SHALL PROCEED AS FOLLOWS: 7.1. CONSTRUCT A MEANDERING TEMPORARY CHANNEL CHANGE ADJACENT TO THE PROPOSED CULVERT TO DIVERT WATER TEMPORARILY DURING THE CULVERT CONSTRUCTION. TEMPORARY EROSION CONTROL MEASURES SHALL BE INSTALLED IN ACCORDANCE WITH THE STANDARD SPECIFICATIONS.
   - 7.2. RELOCATE CHANNEL AND CONSTRUCT CULVERT SIMULTANEOUSLY.
   - 7.3. SOD AND/OR RIP-RAP RECONSTRUCTED BANKS AT TRANSITIONS. THE UPPER CHANNEL PLUG IS TO REMAIN IN PLACE UNTIL SUBNOTE (7.1) THROUGH (7.4) UNDER THIS HEADING ARE COMPLETED TO INSURE THAT ALL CONSTRUCTION IS IN THE DRY.
   - 7.4. IF AN EARTH PLUG IS NECESSARY AT THE DOWNSTREAM END OF THE CHANNEL IT SHOULD BE REMOVED FIRST, THEN REMOVE THE UPPER PLUG TO RELEASE WATER INTO THE RECONSTRUCTED CHANNEL.
   - 7.5 PLUGS SHOULD REMAIN IN PLACE UNTIL PERMANENT STABILIZATION OF THE NEW WATER COURSE IS COMPLETED. REMOVAL OF PLUGS SHOULD ONLY BE PERFORMED FOLLOWING ACCEPTANCE OF ALL STABILIZATION WORK BY THE ENGINEER.
8. THE DETAILS PROVIDED DEPICT TYPICAL TEMPORARY DIVERSION CHANNELS.
9. THE CONTRACTOR MAY PROPOSE THE USE OF OTHER DIVERSION OPTIONS SUCH AS PIPING, PUMPING OR STAGED CONSTRUCTION.
10. THE EFFECTIVE AREA OF FLOW IN THE TEMPORARY CHANNEL OR CULVERT SHALL BE AT LEAST ONE-HALF THAT OF THE EXISTING STRUCTURE.

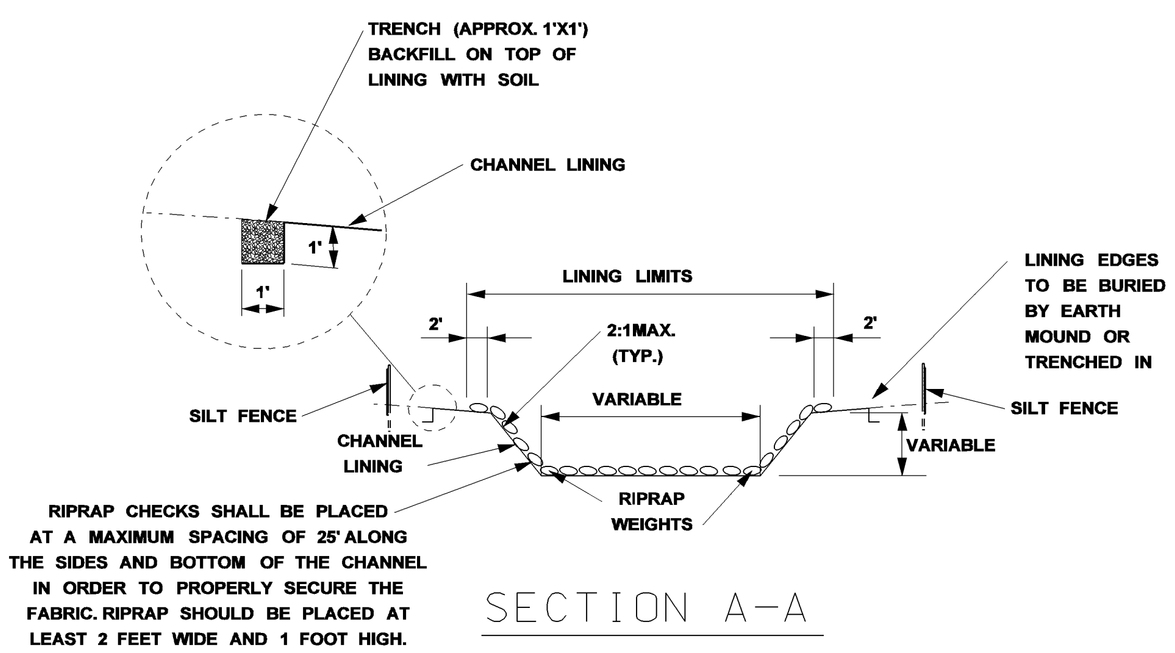

SECTION A-A

TEMPORARY DIVERSION CHANNEL WITH GEOTEXTILE FABRIC

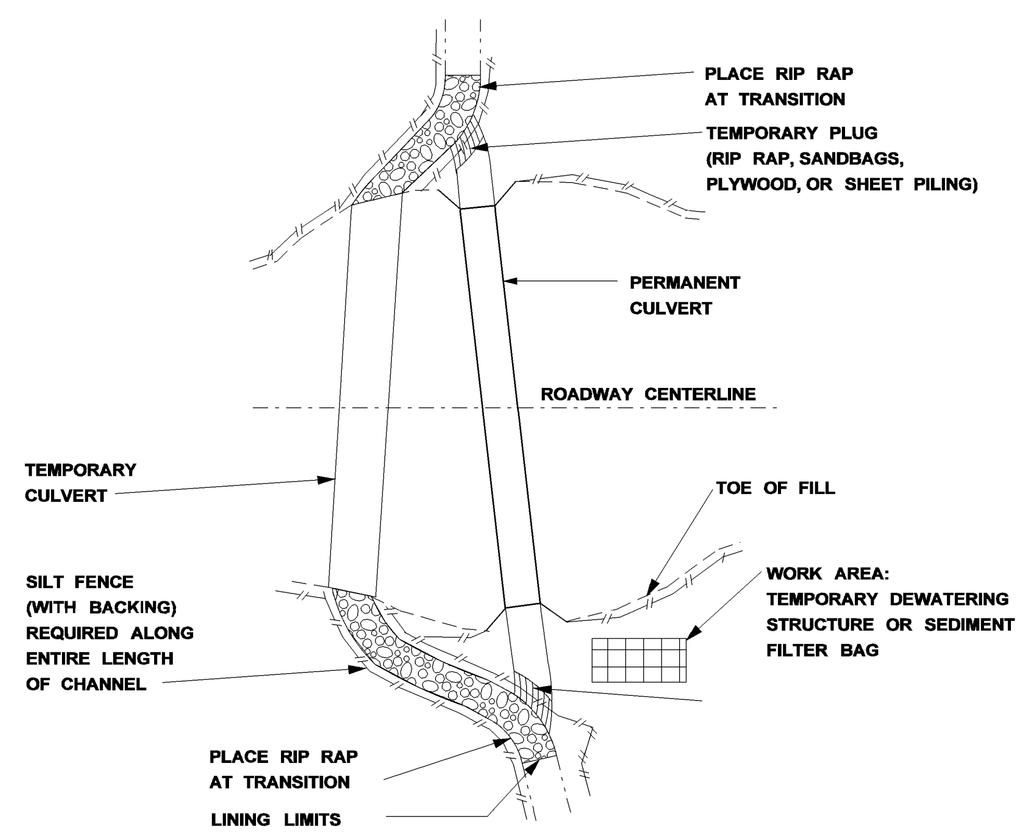

TEMPORARY CULVERT USED DURING CONSTRUCTION

REVISION	BY	MISSISSIPPI DEPARTMENT OF TRANSPORTATION TEMPORARY STREAM DIVERSION
DATE		WORKING NUMBER ECD-17
		FILENAME: EROSION CONTROL\ECD-17.DGN DESIGN TEAM ____ CHECKED ____ DATE ____
		SHEET NUMBER

1/28/2010 9:43 AM ECD-17.DGN
MISSISSIPPI DEPARTMENT OF TRANSPORTATION ROADWAY DESIGN DIVISION
LOS 501

STATE	PROJECT NO.
MISS.	

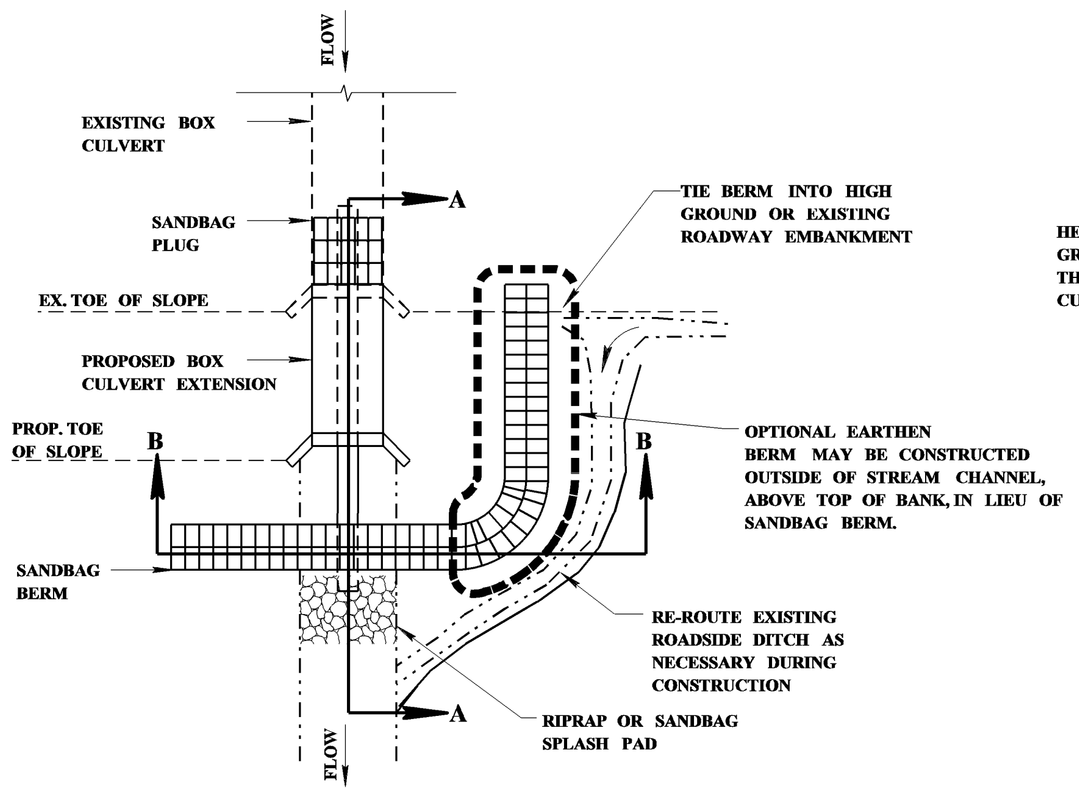

PLAN VIEW

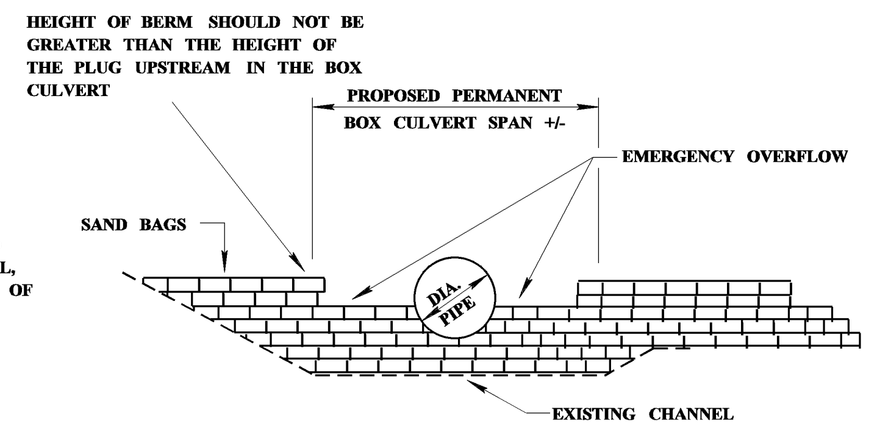

SECTION B-B

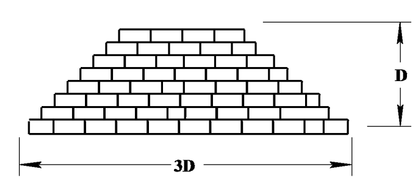

SAND BAG PLUG & BERM CROSS SECTION

(SEE NOTE 4)

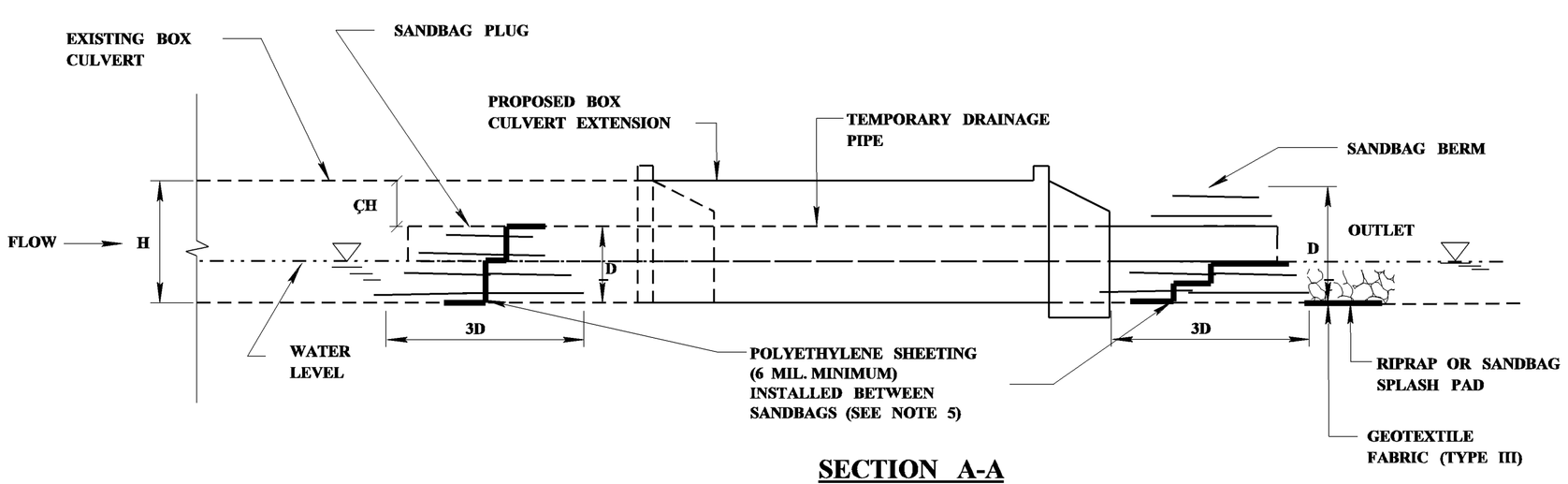

SECTION A-A

MAXIMUM SPAN FOR PIPE SUPPORTS, FEET

DIAMETER OF PIPE (IN.)	STEEL THICKNESS (IN.)				
	0.064	0.079	0.109	0.138	0.168
	2" x 1/2" CORRUGATION				
24	13	15	20		
36	12	15	20	25	
48	11	14	19	25	30
60		14	19	24	29
72			18	24	29
	5" X 1" OR 3" X 1" CORRUGATION				
36	9	11			
48	9	11	15		
60	8	10	14	18	
72	8	10	14	18	22

FOR PIPE SIZES NOT SHOWN REFER TO NEXT LARGER SIZE

GENERAL NOTES

1 SUSPENDED PIPE DIVERSIONS MAY BE USED TO ALLOW BOX CULVERT EXTENSIONS TO BE CONSTRUCTED, WHILE SEPARATED FROM FLOWING WATER, THUS REDUCING SEDIMENTATION. OPTIONAL FLEXIBLE PIPE DIVERSION MAY BE UTILIZED ON STREAMS WITH INTERMITTENT FLOW WHERE THE DURATION OF CONSTRUCTION IS EXPECTED TO BE BRIEF.

2 EXCAVATION SLOPES FOR BOX CULVERT EXTENSIONS SHALL BE PROTECTED WITH TYPE III FILTER FABRIC PRIOR TO CONSTRUCTION OF THE BOX.

3 SUSPENDED PIPE DIVERSIONS MAY BE USED WHERE ADVERSE IMPACTS WILL NOT BE CAUSED BY WATER PONDED UPSTREAM OF THE PIPE.

4 THE SANDBAG PLUG AT THE UPSTREAM END OF THE SUSPENDED PIPE DIVERSION SHOULD BE CONSTRUCTED TO A HEIGHT EQUAL TO THREE QUARTERS OF THE RISE OF THE BOX CULVERT.

5 POLYETHYLENE SHEETING (6 MIL. MINIMUM) SHALL BE PLACED INSIDE THE SANDBAG PLUG IN THE BOX CULVERT AND IN THE SAND BAG BERM WITHIN THE CHANNEL IN ORDER TO PROVIDE THE BEST POSSIBLE SEAL. SANDBAGS ON THE DOWNSTREAM SIDE OF THE SHEETING SHOULD BE PLACED FIRST, AND THEN SHEETING PLACED ON THESE BAGS. AS MUCH AS POSSIBLE, THE SHEETING SHOULD BE FITTED AROUND THE PIPE. THE REMAINING SANDBAGS WOULD THEN BE PLACED ON THE SHEETING. WHERE MULTIPLE SHEETS ARE USED, THEY SHOULD OVERLAP A MINIMUM OF 18 INCHES.

6 THE PROPOSED CULVERT CONSTRUCTION SHALL BE SEALED FROM THE EXISTING STREAM BY MEANS OF A SANDBAG BERM WHICH SHOULD BE AT THE SAME HEIGHT AS THE PLUG INSIDE THE BOX CULVERT. THIS BERM SHALL BE TIED INTO EITHER HIGH GROUND ADJACENT TO THE CHANNEL OR THE EXISTING ROADWAY EMBANKMENT. IT SHALL BE PROVIDED WITH A SPILLWAY EQUAL IN WIDTH TO THE BOX CULVERT AND AT A HEIGHT LOWER THAN THE REST OF THE BERM.

7 THE TEMPORARY DRAINAGE PIPE SHALL BE SUPPORTED AT ALL JOINTS AND AT INTERVALS NOT TO EXCEED MAXIMUM VALUES SPECIFIED IN THE TABLE "MINIMUM SPAN FOR SUPPORTS." SUPPORTS MAY CONSIST OF SANDBAGS, CONCRETE BLOCKS, WOODEN FRAMES, OR ANY OTHER MATERIAL SUFFICIENT TO SUPPORT THE WEIGHT OF THE PIPE WHEN IT IS FLOWING FULL. SUPPORTS AT JOINTS SHALL BE A MINIMUM OF 18 INCHES IN LENGTH, ALONG THE TEMPORARY DRAINAGE PIPE AND CENTERED ON THE JOINT. SUPPORTS SHOULD "CRADLE" THE TEMPORARY DRAINAGE PIPE TO ENSURE THAT IT WILL NOT ROLL DURING CONSTRUCTION OF THE BOX CULVERT.

8 ALL PIPE JOINTS SHALL BE PROPERLY BANDED OR OTHERWISE PROVIDED WITH A REASONABLE SEAL AGAINST LEAKAGE.

9 THE OPTIONAL FLEXIBLE PIPE DIVERSION USING PUMPS MAY BE USED AS AN ALTERNATE FOR SUSPENDED PIPE DIVERSIONS (UPSTREAM AND DOWNSTREAM).

10 CONSTRUCTION SHALL PROCEED AS FOLLOWS:
- 10A. INSTALL TEMPORARY DRAINAGE PIPE ON ITS SUPPORTS INSIDE THE CULVERT TO BE EXTENDED.
- 10B. CONSTRUCT THE SANDBAG PLUG AT THE UPSTREAM END OF THE SUSPENDED PIPE DIVERSION.
- 10C. CONSTRUCT THE SANDBAG BERM AT THE DOWNSTREAM END OF THE SUSPENDED PIPE DIVERSION.
- 10D. ONCE THE BOX CULVERT EXTENSION HAS BEEN COMPLETED, REMOVE THE DOWNSTREAM SANDBAG STRUCTURE, EXCEPT FOR THOSE BAGS NEEDED TO SUPPORT THE END OF THE PIPE. THE UPSTREAM SANDBAG STRUCTURE SHOULD THEN BE REMOVED GRADUALLY, IN ORDER TO ALLOW THE UPSTREAM WATER LEVEL TO DRAW DOWN AT A SAFE RATE.
- 10E. REMOVE THE TEMPORARY DRAINAGE PIPE, SUPPORTS AND ANY REMAINING SANDBAGS.

11 TEMPORARY DRAINAGE PIPE, SANDBAG PLUGS, BERMS, AND SUPPORTS SHALL BE INSPECTED WEEKLY OR AFTER EVERY RAIN EVENT. ANY NEEDED REPAIRS SHALL BE DONE IMMEDIATELY. ANY DEBRIS WHICH HAS ACCUMULATED AT THE INLET OF THE SUSPENDED PIPE DIVERSION SHALL BE IMMEDIATELY REMOVED.

12 RIP RAP MAY BE SUBSTITUTED FOR SAND BAGS

DATE	REVISION	BY

MISSISSIPPI DEPARTMENT OF TRANSPORTATION

TEMPORARY STREAM DIVERSION (BOX EXTENSIONS)

WORKING NUMBER ECD-18

SHEET NUMBER

FILENAME: EROSION CONTROL\ECD-18.DGN

DESIGN TEAM _____ CHECKED _____ DATE _____

MISSISSIPPI DEPARTMENT OF TRANSPORTATION ROADWAY DESIGN DIVISION 2002
1/28/2010 9:14 AM ECD-18.DGN

STATE	PROJECT NO.
MISS.	

FLOATING TURBIDITY CURTAIN

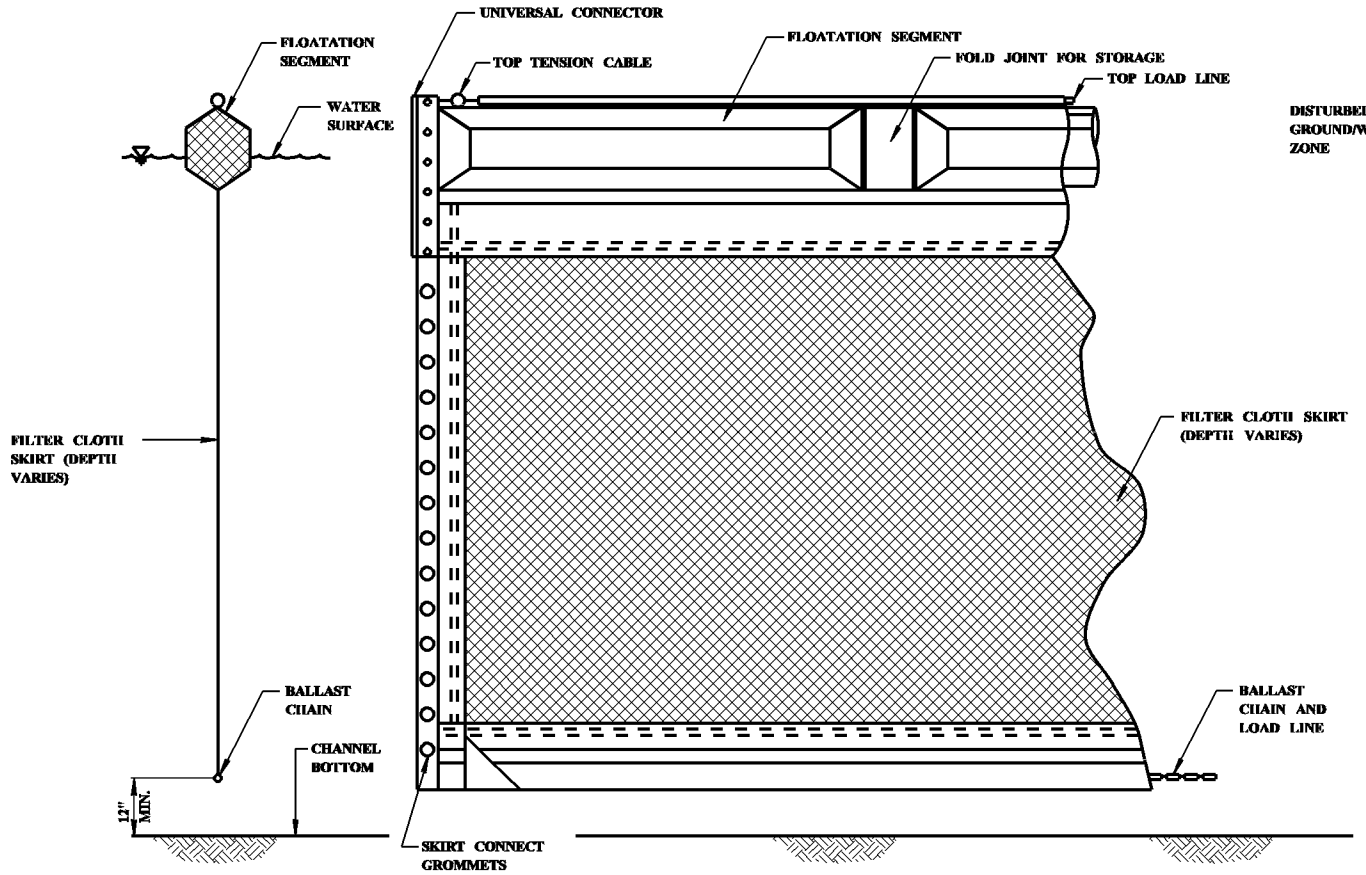

TYPICAL ANCHORING PLAN FOR SHORELINE/RIVER EDGE WORK

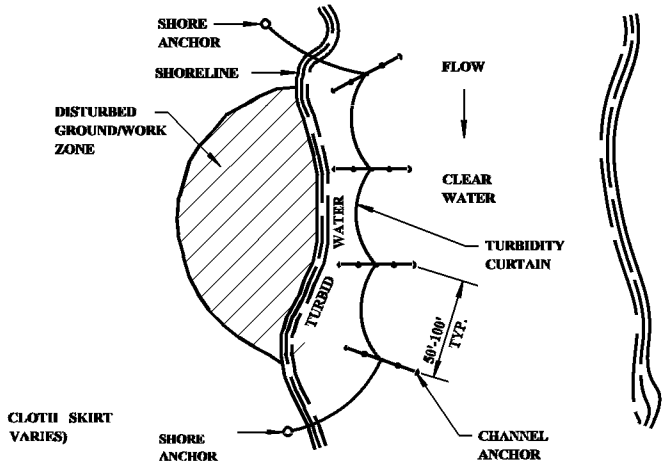

PLAN VIEW

TYPICAL ANCHORING PLAN FOR MID CHANNEL WORK (BRIDGE PIER, CAISSON, ETC.)

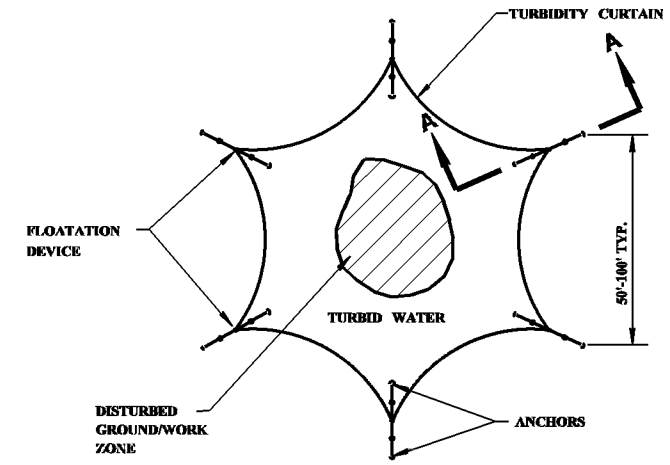

PLAN VIEW

TYPICAL ANCHORING SECTION

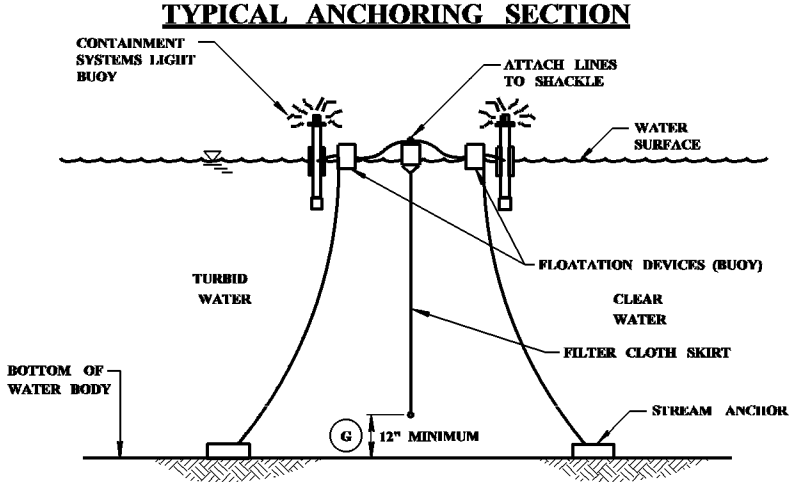

SECTION A-A

AUTOMATIC FLASHING LIGHT BUOY (ON AT DUSK-OFF AT DAWN) 100' ON CENTER SHALL BE USED IN NAVIGABLE CHANNELS ONLY

EROSION CONTROL PLAN LEGEND: FLOATING TURBIDITY CURTAIN

FLOATING TURBIDITY CURTAIN GENERAL NOTES

(A) FLOATING TURBIDITY CURTAINS (ALSO KNOWN AS TURBIDITY BARRIERS OR SILT CURTAINS) CREATE A BARRIER TO PREVENT TURBID WATER FROM ENTERING CLEAR WATER. FLOATING TURBIDITY CURTAINS SHOULD BE USED TO ISOLATE ACTIVE CONSTRUCTION AREAS WITHIN OR ADJACENT TO A BODY OF WATER TO MINIMIZE THE MIGRATION OF SILT LADEN WATER OUT OF THE CONSTRUCTION ZONE.

(B) TURBIDITY CURTAINS SHALL NOT BE INSTALLED PERPENDICULAR ACROSS THE MAIN FLOW OF A SIGNIFICANT BODY OF MOVING WATER.

(C) FLOATING TURBIDITY CURTAINS SHALL NO BE USED WHERE THE ANTICIPATED FLOW VELOCITIES WILL EXCEED 5 FT/SEC.

(D) TURBIDITY CURTAINS SHALL BE ANCHORED TO PREVENT DRIFT SHOREWARD OR DOWNSTREAM. ANCHORAGE SHALL BE INSTALLED ON BOTH SHORE AND STREAM SIDE. CURTAINS SHALL BE INSTALLED AS CLOSE TO PROJECT SITE AS POSSIBLE. BARRIERS SHOULD BE A BRIGHT COLOR (YELLOW OR "INTERNATIONAL" ORANGE ARE RECOMMENDED) THAT WILL ATTRACT THE ATTENTION OF NEARBY BOATERS.

(E) SHORE ANCHORS SHALL CONSIST OF A POST WITH DEADMAN OR APPROVED EQUAL. STREAM ANCHORS SHALL BE OF SUFFICIENT SIZE TO STABILIZE THE BARRIER WITH NUMBER AND SPACING DEPENDENT ON WATERWAY VELOCITIES AND MANUFACTURER'S RECOMMENDATIONS.

(F) IN SHALLOW WATER (2 FEET OF DEPTH OR LESS) A TURBIDITY CURTAIN MAY BE INSTALLED ON STAKES DRIVEN INTO THE BED OF THE WATER BODY.

(G) FABRIC SECTIONS SHALL BE CONNECTED END TO END WITH MINIMUM Ü" DIAMETER POLYPROPYLENE ROPE. FABRIC SHALL BE SEAMED TOGETHER IN A MANNER THAT RETAINS THE OVERALL TENSILE STRENGTH.

(H) DESIGN OF CURTAIN AND ANCHORAGE SHALL BE IN ACCORDANCE WITH MANUFACTURER'S RECOMMENDATIONS. FILTER CLOTH SKIRT SHOULD BE ABLE TO WITHSTAND THE FORCES IMPARTED ON IT DUE TO THE EXPECTED WIND VELOCITY OR STREAM VELOCITY. FABRIC SHALL BE MADE OF A NON-DETERIORATING MATERIAL, SUCH AS PLASTIC OR NYLON, WHICH WILL ALLOW WATER TO PASS THROUGH WHILE STILL RETAINING SEDIMENT.

(I) THE TURBIDITY CURTAIN AND ADJACENT WORK AREAS SHALL NOT BE DISTURBED 12 HOURS PRIOR TO REMOVAL FROM WATER BODY. MAINTENANCE SHALL BE PERFORMED AS NEEDED. CONTRACTOR SHALL REMOVE THE CURTAIN AT COMPLETION OF WORK IN A MANNER THAT WILL PREVENT SILTATION OF THE WATERWAY. DURING REMOVAL, EXTREME CARE SHOULD BE TAKEN NOT TO DISTURB ANY SEDIMENT DEPOSITS.

(J) MAINTAIN 12" MINIMUM GAP BETWEEN SKIRT BOTTOM AND CHANNEL BOTTOM TO PREVENT ACCUMULATED SEDIMENT FROM PULLING TOP OF CURTAIN BELOW WATER SURFACE.

(K) IN WIND OR WAVE ACTION SITUATIONS, THE MAXIMUM DEPTH OF THE CURTAIN SHALL BE 12 FEET.

(L) CONCENTRATED FLOWS SHALL NOT DISCHARGE BEYOND FLOATING TURBIDITY CURTAIN. CURTAINS ARE NOT TO BE INSTALLED ACROSS FLOWING BODY OF WATER.

(M) WHEN INSTALLED IN A NAVIGABLE WATERWAY, BUOYS SHOULD BE LIT ACCORDING TO REGULATORY AGENCY STANDARDS.

(N) WHEN ESTIMATING THE LENGTH OF TURBIDITY CURTAIN, ALLOW 10 TO 20 PERCENT VARIANCE IN STRAIGHT LINE MEASUREMENT.

(O) PAYMENT FOR FLOATING TURBIDITY CURTAIN SHALL INCLUDE ALL MATERIAL AND LABOR NECESSARY FOR CONSTRUCTION, MAINTENANCE, AND REMOVAL OF TURBIDITY CURTAINS

(P) ONLY FLOATING TURBIDITY CURTAINS LISTED ON THE APPROVED PRODUCTS LIST MAY BE USED.

DATE	REVISION	BY

MISSISSIPPI DEPARTMENT OF TRANSPORTATION

FLOATING TURBIDITY CURTAIN

FILENAME: EROSION CONTROL\ECD-19.DGN

DESIGN TEAM _____ CHECKED _____ DATE _____

WORKING NUMBER ECD-19

SHEET NUMBER

PLAN ROADWAY DESIGN DIVISION MISSISSIPPI DEPARTMENT OF TRANSPORTATION
1/20/2010 9:49 AM ECD-19.DGN

STATE	PROJECT NO.
MISS.	

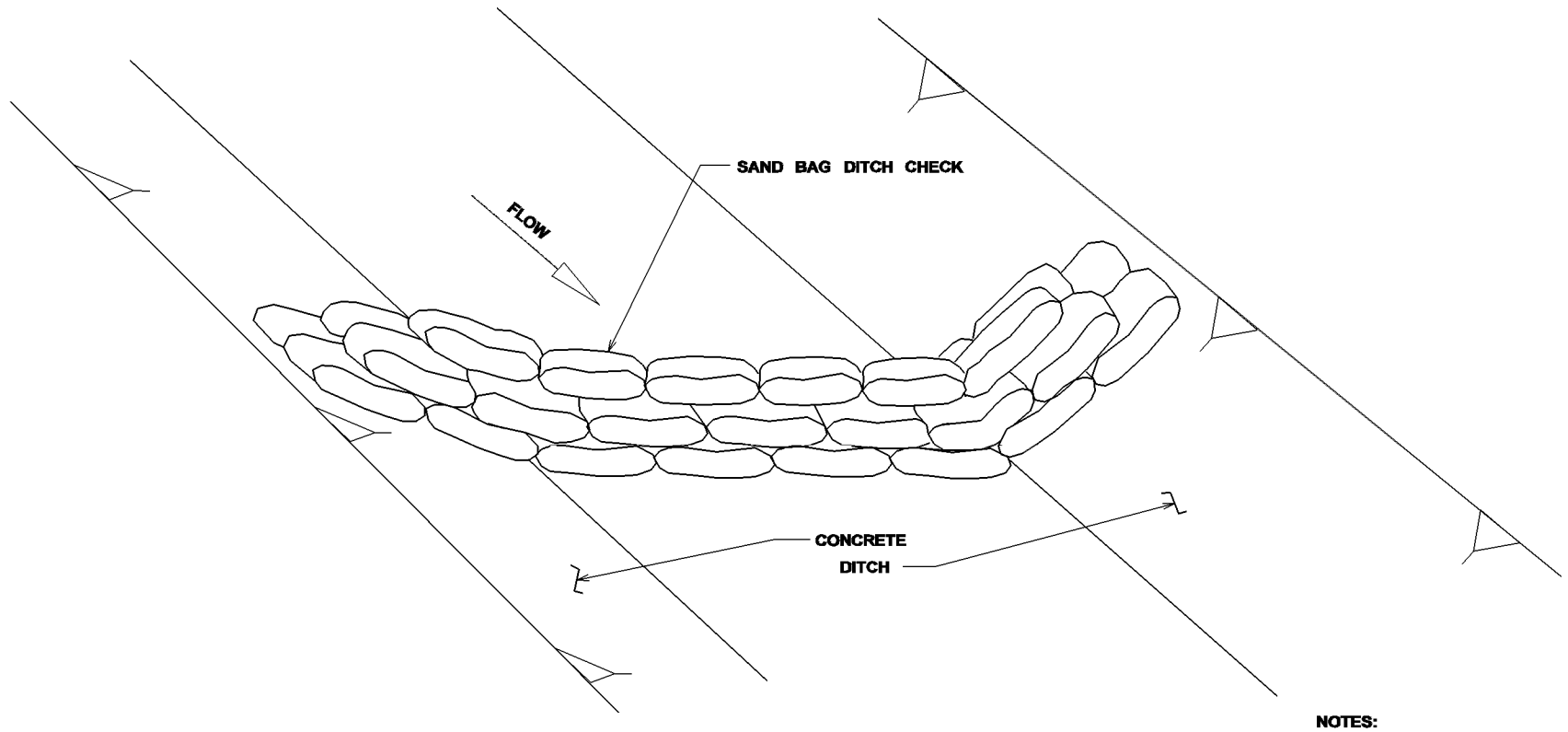

DETAIL (DITCH CHECK)

NOTES:

1. MINIMUM RECOMMENDED PLACEMENT INTERVAL BETWEEN SAND BAG DITCH CHECK IS 100' UNLESS SHOWN OTHERWISE ON THE PLANS OR APPROVED BY THE ENGINEER. SEE SPACING GUIDANCE ON ECD-4.

2. PREVENTING SEDIMENT FROM ENTERING A PAVED DITCH IS PREFERABLE TO CAPTURING SEDIMENT WITHIN PAVED DITCH.

SAND BAG DITCH CHECK SELECTION GUIDELINES

SAND BAG DITCH CHECKS ARE USED FOR VELOCITY REDUCTION AND MINIMAL SEDIMENT TRAPPING IN CONCRETE PAVED DITCHES OR IN DITCHES THAT HAVE ROCKY BOTTOMS.

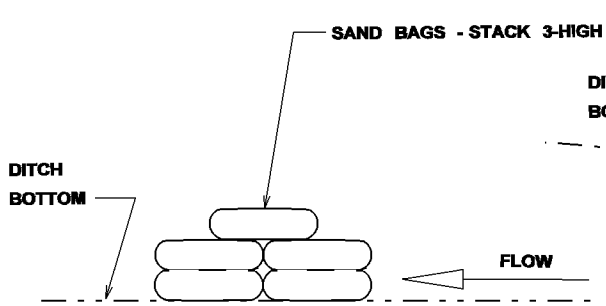

SECTION A-A

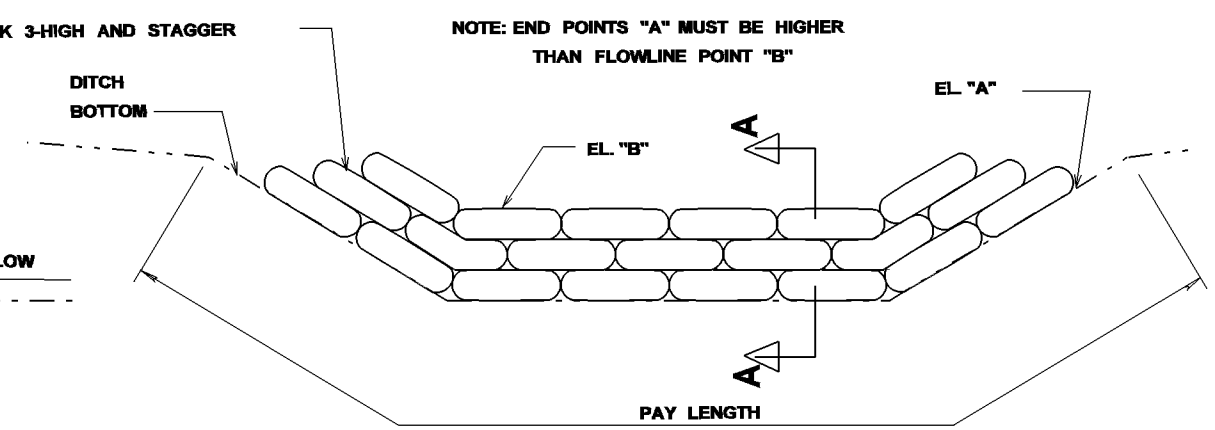

ELEVATION DETAIL

MISSISSIPPI DEPARTMENT OF TRANSPORTATION

DETAILS OF EROSION CONTROL
SANDBAG DITCH CHECK

REVISION	BY	DATE

FILENAME: EROSION CONTROL\ECD-20.DGN

DESIGN TEAM _____ CHECKED _____ DATE _____

WORKING NUMBER
ECD-20

SHEET NUMBER

304

PLAN
ROADWAY DESIGN DIVISION
MISSISSIPPI DEPARTMENT OF TRANSPORTATION

1/20/2010 9:50 AM ECD-20.DGN

STATE	PROJECT NO.
MISS.	

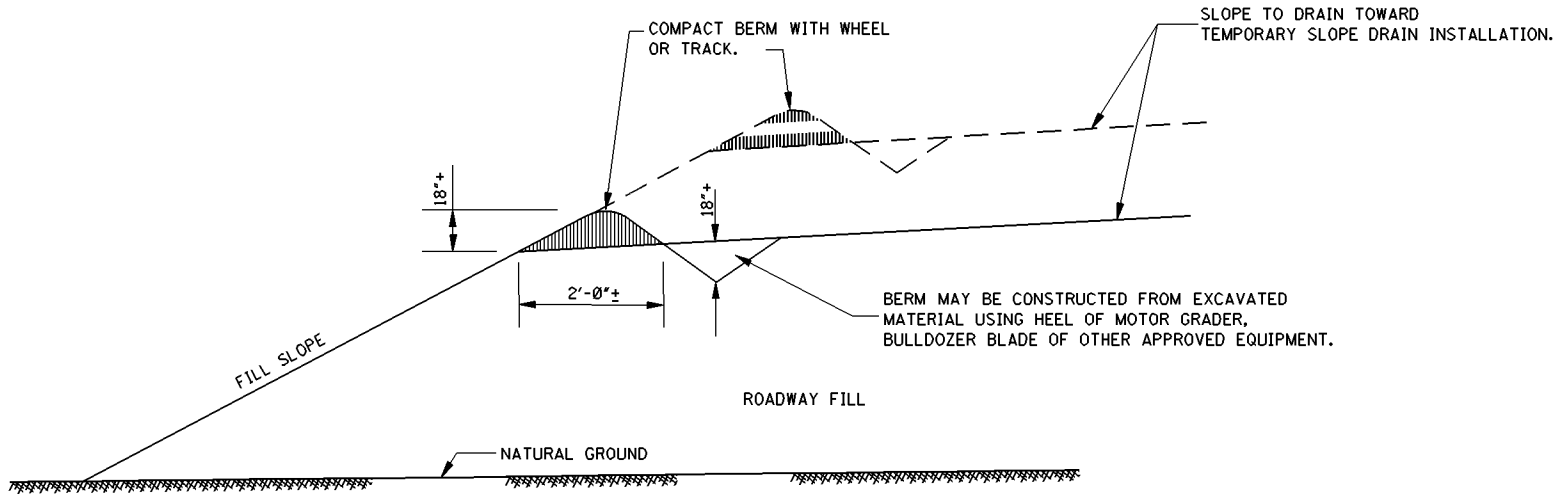

TEMPORARY SHOULDER BERM

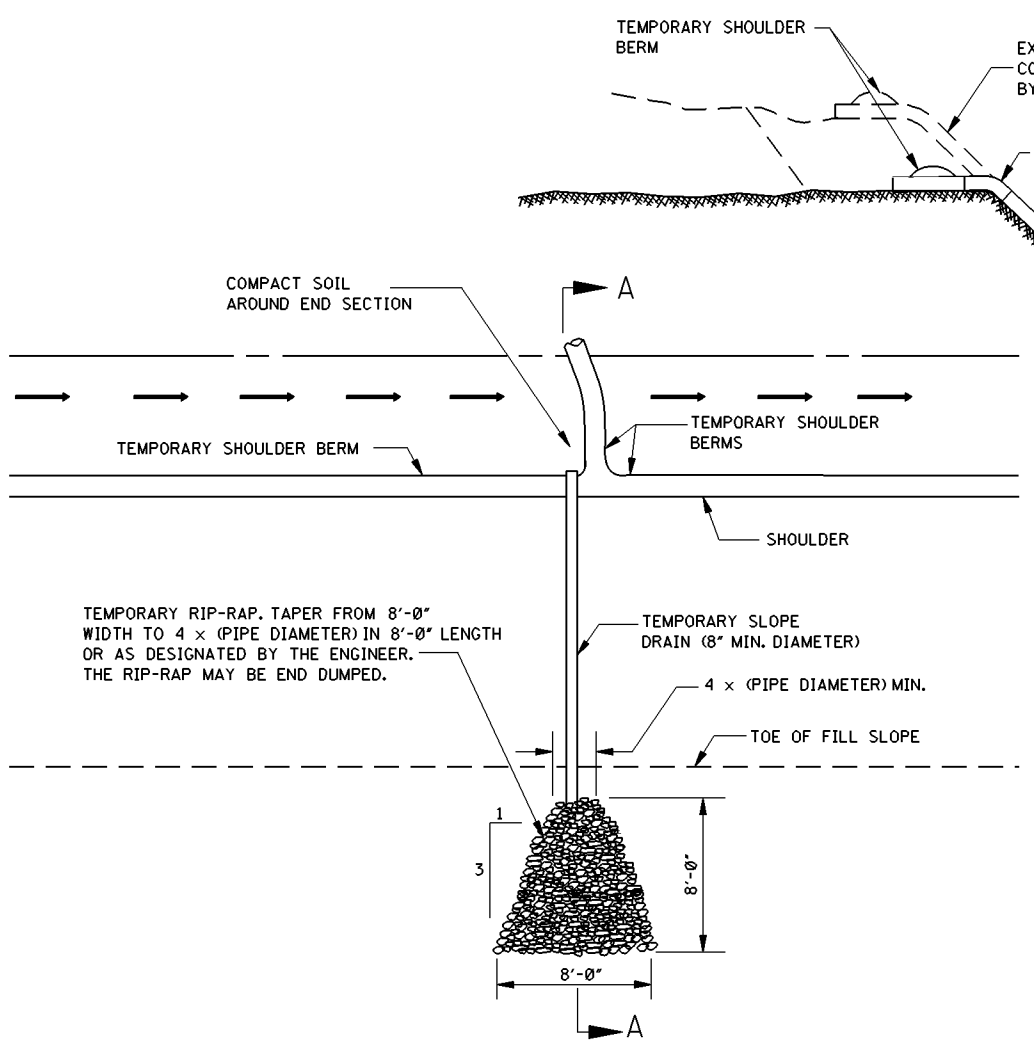

PLAN

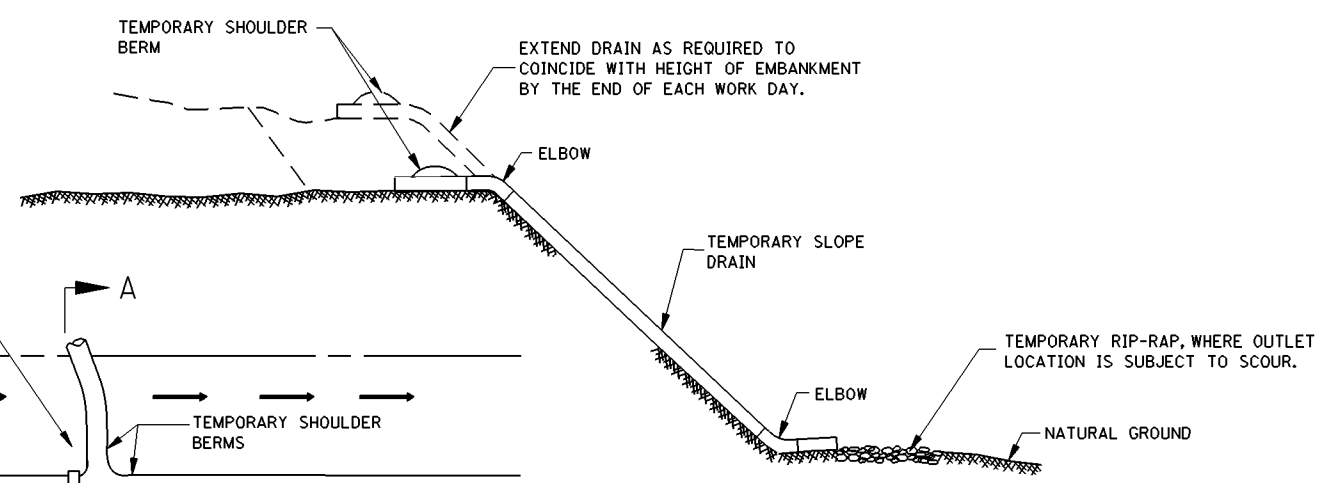

SECTION A–A

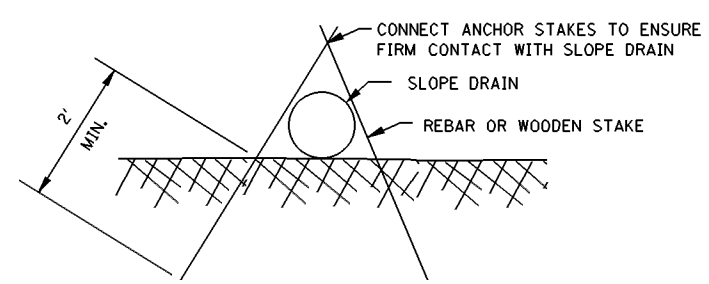

RECOMMENDED ANCHOR DETAIL

NOTE: CONTRACTOR MAY PROPOSE ALTERNATE ANCHORING DETAIL. ENGINEER'S APPROVAL WILL BE BASED ON PERFORMANCE

TEMPORARY SLOPE DRAIN

NOTE: TEMPORARY SLOPE DRAINS TO BE PLACED AT LOW POINT OF ALL SAG VERTICAL CURVES. INTERMEDIATE LOCATIONS TO BE PLACED AS DESIGNATED OR DEEMED APPROPRIATE BY THE CONTRACTOR AND APPROVED BY THE ENGINEER.

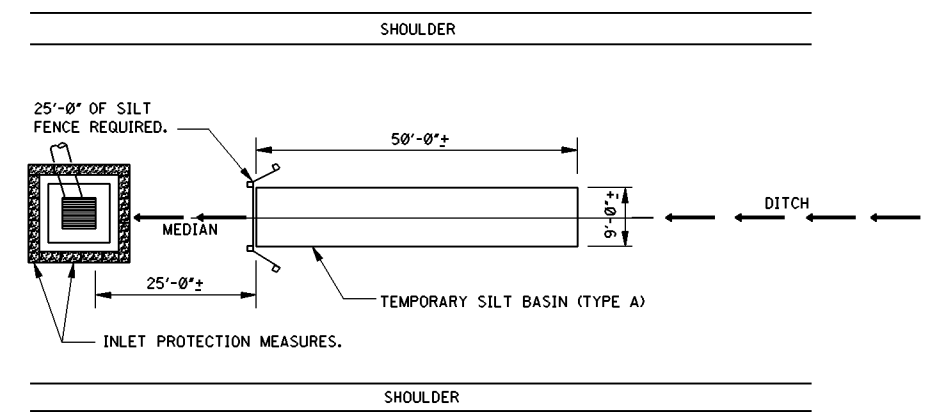

TEMPORARY MEDIAN SILT BASIN (TYPE A)

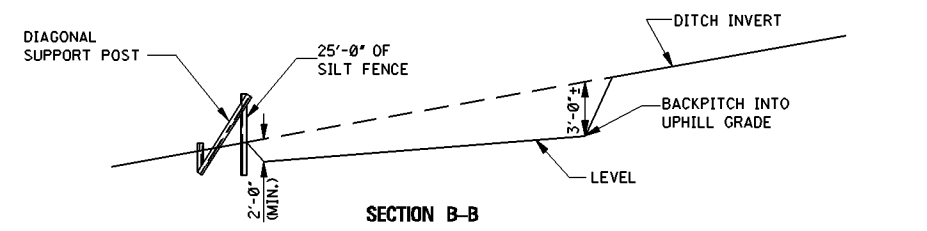

SECTION B–B

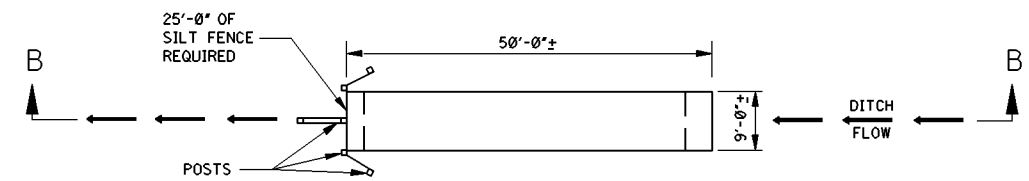

PLAN

TEMPORARY SILT BASIN (TYPE A)

NOTE: TEMPORARY SILT BASIN (TYPE A) TO BE PLACED IN SURFACE DRAIN DITCHES AND SIDE DITCHES AT THE END OF CUT SECTIONS, IMMEDIATELY PRECEEDING DITCH INLETS AND JUST BEFORE THE WATER (RUNOFF) LEAVES THE RIGHT-OF-WAY OR ENTERS A WATER COURSE. LOCATION AND SIZE (OTHER THAN AS SHOWN) MAY BE REQUIRED AS DIRECTED BY THE ENGINEER.

GENERAL NOTES:

1. THE CONTRACTOR SHALL BE REQUIRED TO FURNISH ALL MATERIALS AND PERFORM ALL WORK FOR THE PROPER INSTALLATION, MAINTENANCE AND REMOVAL OF TEMPORARY EROSION CONTROL MEASURES NECESSARY TO CONTROL SILTATION.

DATE	REVISION	BY

MISSISSIPPI DEPARTMENT OF TRANSPORTATION

TYPICAL TEMPORARY EROSION CONTROL MEASURES

(SLOPE DRAIN AND TYPE A SILT BASIN)

WORKING NUMBER TEC-2

SHEET NUMBER

FILENAME: ERSOSION CONTROL\TEC-2.DGN

DESIGN TEAM _____ CHECKED _____ DATE _____

PLAN
ROADWAY DESIGN DIVISION
MISSISSIPPI DEPARTMENT OF TRANSPORTATION
1/20/2010 9:52 AM TEC-2.DGN

STATE	PROJECT NO.
MISS.	

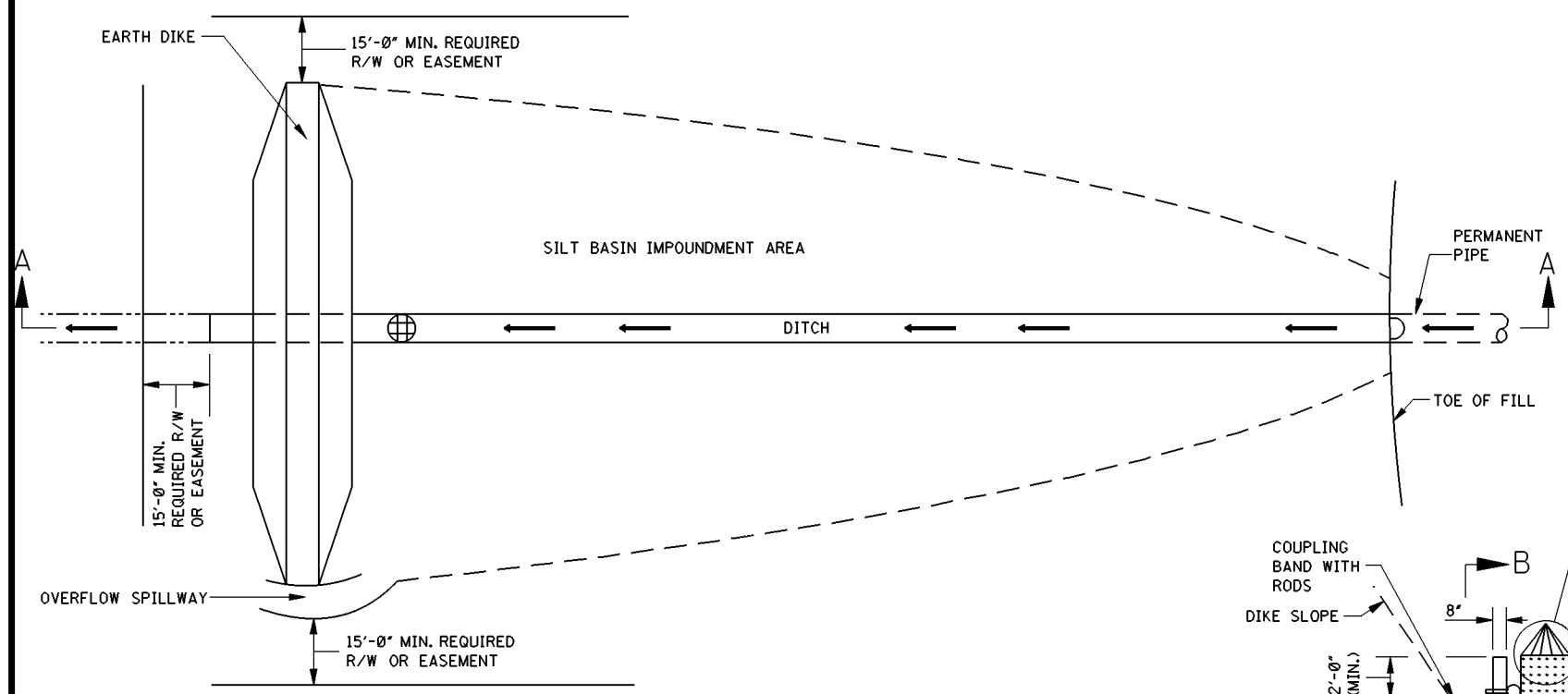

PLAN

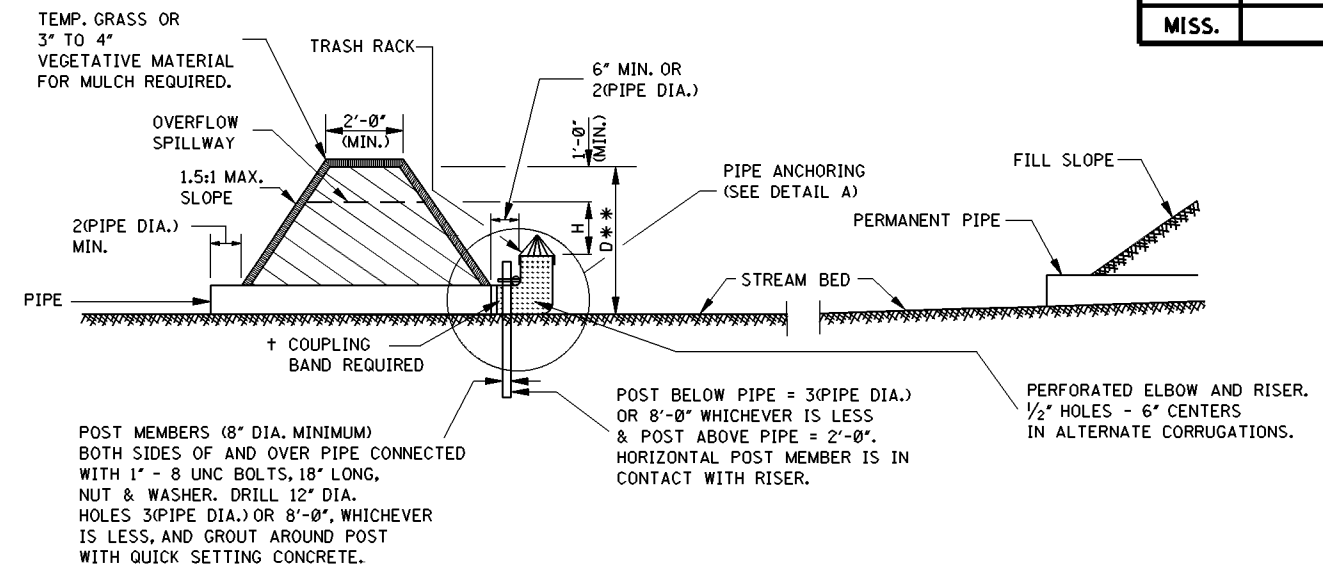

SECTION A–A

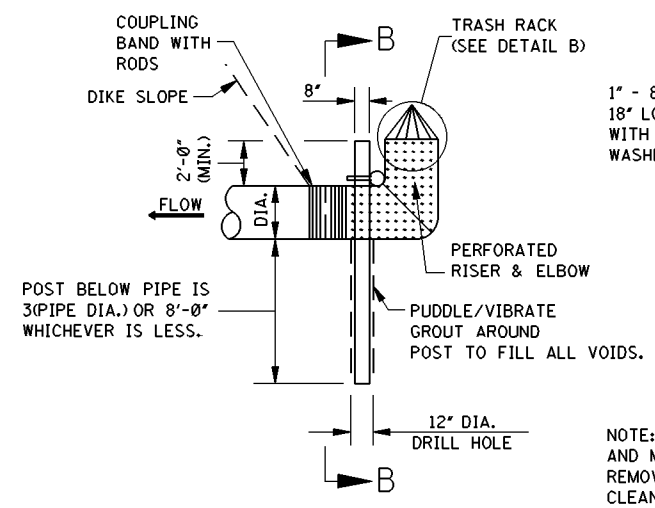

DETAIL A

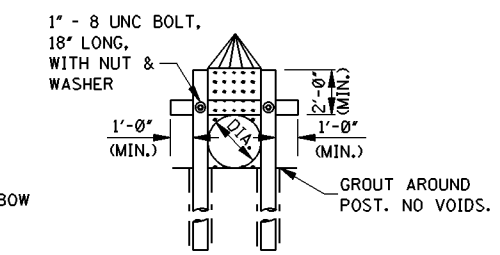

SECTION B–B

NOTE: POST MEMBERS MAY BE GREEN TIMBER AND MAY BE CUT OFF AT NATURAL GROUND REMOVAL. POST MUST BE 8" MINIMUM CLEAN DIAMETER.

PIPE ANCHORAGE

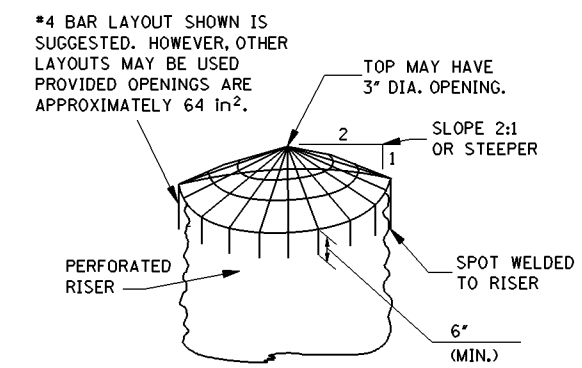

DETAIL B
TRASH RACK INSTALLATION

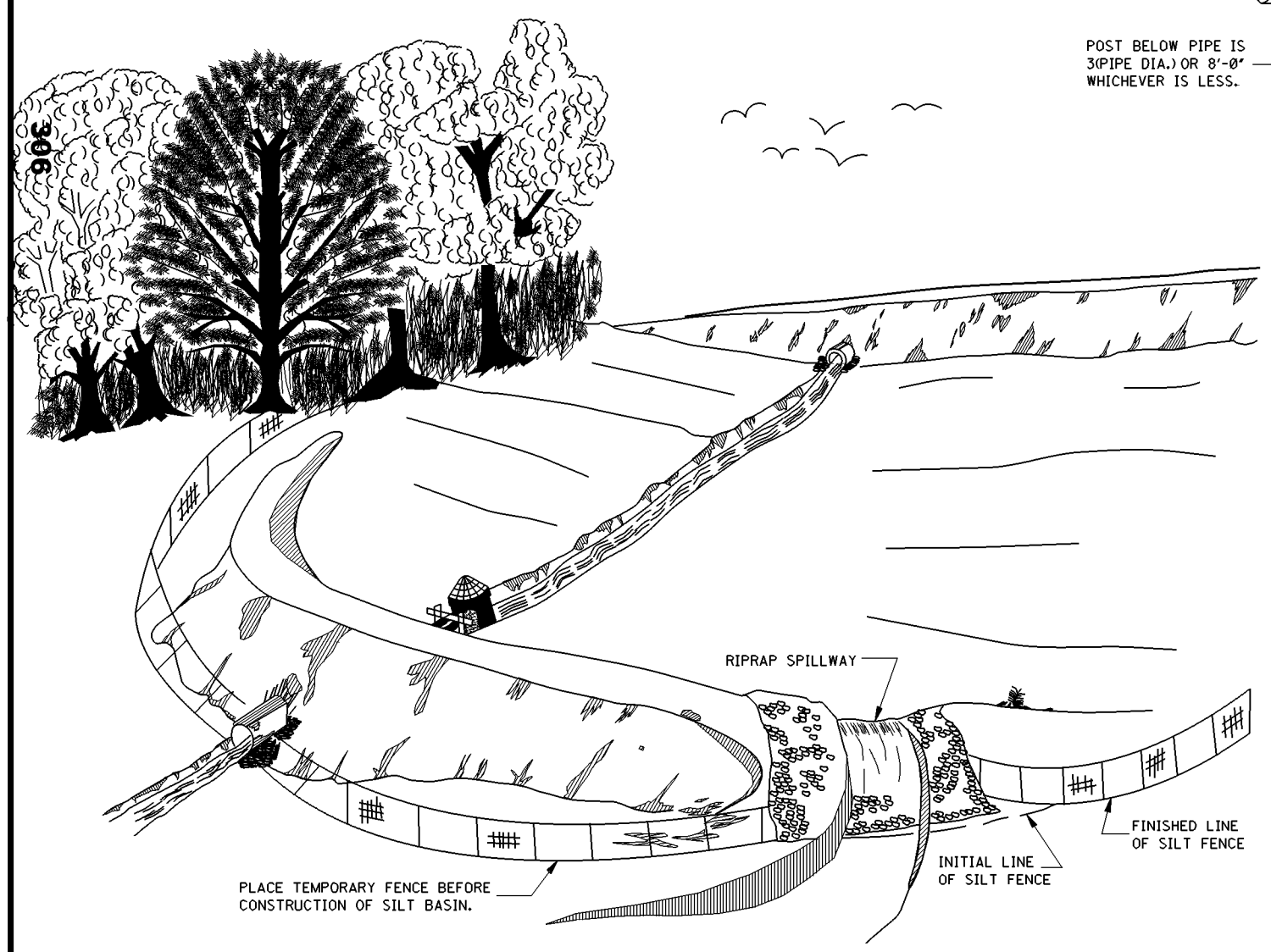

TEMPORARY SILT BASIN (TYPE B)

GENERAL NOTES:

1. PROVIDE OVERFLOW SPILLWAY IN NATURAL GROUND AT A MINIMUM OF 1'-0" BELOW TOP OF DIKE. CROSS-SECTIONAL AREA OF SPILLWAY IS EQUAL TO 1.5 TIMES THE AREA OF THE OUTLET PIPE MINIMUM. RIPRAP SHALL BE REQUIRED AT THE SPILLWAY. AFTER THE PURPOSE OF THE SILT BASIN HAS BEEN SERVED, THE DIKE AND RIPRAP MAY REMAIN IN PLACE AT THE DISCRETION OF THE ENGINEER, BUT THE DRAIN PIPE WITH RISER SHALL BE REMOVED AND THE NEWLY DISTURBED AREA REVEGETATED.
2. BASIN AND DIKE DIMENSIONS DO NOT REQUIRE CONSTRUCTION TO NEAT LINES.
3. THE SILT BASIN MAY BE CONSTRUCTED IN ANY SHAPE WITH THE DIKE EXTENDING ALONG ONE OR MORE SIDES AS LONG AS THE LENGTH MEASURED IN THE DIRECTION OF FLOW IS APPROXIMATELY TWICE THE WIDTH AND THE IMPOUNDMENT AREA AND DEPTH AT LEAST AS LARGE AS INDICATED.
4. MINIMUM DIMENSIONS FOR SILT BASIN (TYPE B) ARE AS FOLLOWS:

MIN. DIMENSIONS OF SILT BASIN (TYPE B)				† COUPLING BAND	
PIPE	** D (ft-in)	H (ft-in)	* AREA (ft²)	LENGTH (in)	COUPLING RODS/SIDE
15"	4'-0"	1'-0"	310	12"	2 & 2
18"	5'-0"	1'-0"	550	12"	2 & 2
24"	5'-0"	1'-0"	1100	12"	2 & 2
30"	6'-0"	1'-6"	1850	24"	3 & 3
36"	6'-0"	1'-6"	2800	24"	3 & 3
42"	7'-0"	2'-0"	4200	24"	3 & 3
48"	8'-0"	2'-0"	6200	24"	3 & 3

NOTES:
* 1. IMPOUNDMENT SURFACE AREAS ARE MEASURED AT ELEVATION OF TOP OF ELBOW RISER.
** 2. RISER REQUIRED WHERE MINIMUM "D" DIMENSION IS EXCEEDED. LENGTH OF RISER IS EQUAL TO THE AMOUNT THAT MINIMUM "D" DIMENSION IS EXCEEDED.
† 3. COUPLING RODS TO BE 1/2" DIAMETER MINIMUM WITH LUGS.

5. IN SELECTING BASIN SIZE, CONSIDERATION MUST BE GIVEN TO THE AREA DISCHARGING INTO THE BASIN OTHER THAN THAT WHICH COMES THROUGH THE PIPE UNDER THE ROADWAY. THIS WILL AT TIMES NECESSITATE A LARGER BASIN AND OUTLET PIPE SECTION.
6. THE DIKE SHALL BE CONSTRUCTED OF A MATERIAL SUITABLE FOR ROADWAY EMBANKMENT.
7. SILT BASIN (TYPE B) REQUIRED AT LOCATION(S) INDICATED ON PLANS.
8. THE CONTRACTOR SHALL BE REQUIRED TO FURNISH ALL MATERIALS AND PERFORM ALL WORK FOR THE PROPER INSTALLATION, MAINTENANCE AND REMOVAL OF TEMPORARY EROSION CONTROL MEASURES NECESSARY TO CONTROL SILTATION.
9. THE USE OF THE TEMPORARY EROSION CONTROL MEASURE SHOWN ON THIS SHEET WILL ONLY BE REQUIRED AND MEASURED FOR SEPARATE PAYMENT WHEN AN APPROPRIATE PAY ITEM IS INCLUDED IN THE BID SCHEDULE OF THE PROPOSAL.
10. RIPRAP AND TEMPORARY SILT FENCE, USED IN CONJUNCTION WITH TYPE B SILT BASINS AS SHOWN BY THE DETAILS ON THIS SHEET, WILL NOT BE MEASURED FOR SEPARATE PAYMENT. THEIR COST SHALL BE INCLUDED IN THE PRICE BID FOR TYPE B SILT BASIN.

DATE	REVISION	BY

MISSISSIPPI DEPARTMENT OF TRANSPORTATION
ROADWAY DESIGN DIVISION
STANDARD PLAN

TYPICAL TEMPORARY EROSION CONTROL MEASURES
(TYPE B SILT BASIN)

ENGLISH

WORKING NUMBER TEC-3

ISSUE DATE: OCTOBER 1, 1998

SHEET NUMBER 144

STATE	PROJECT NO.
MISS.	

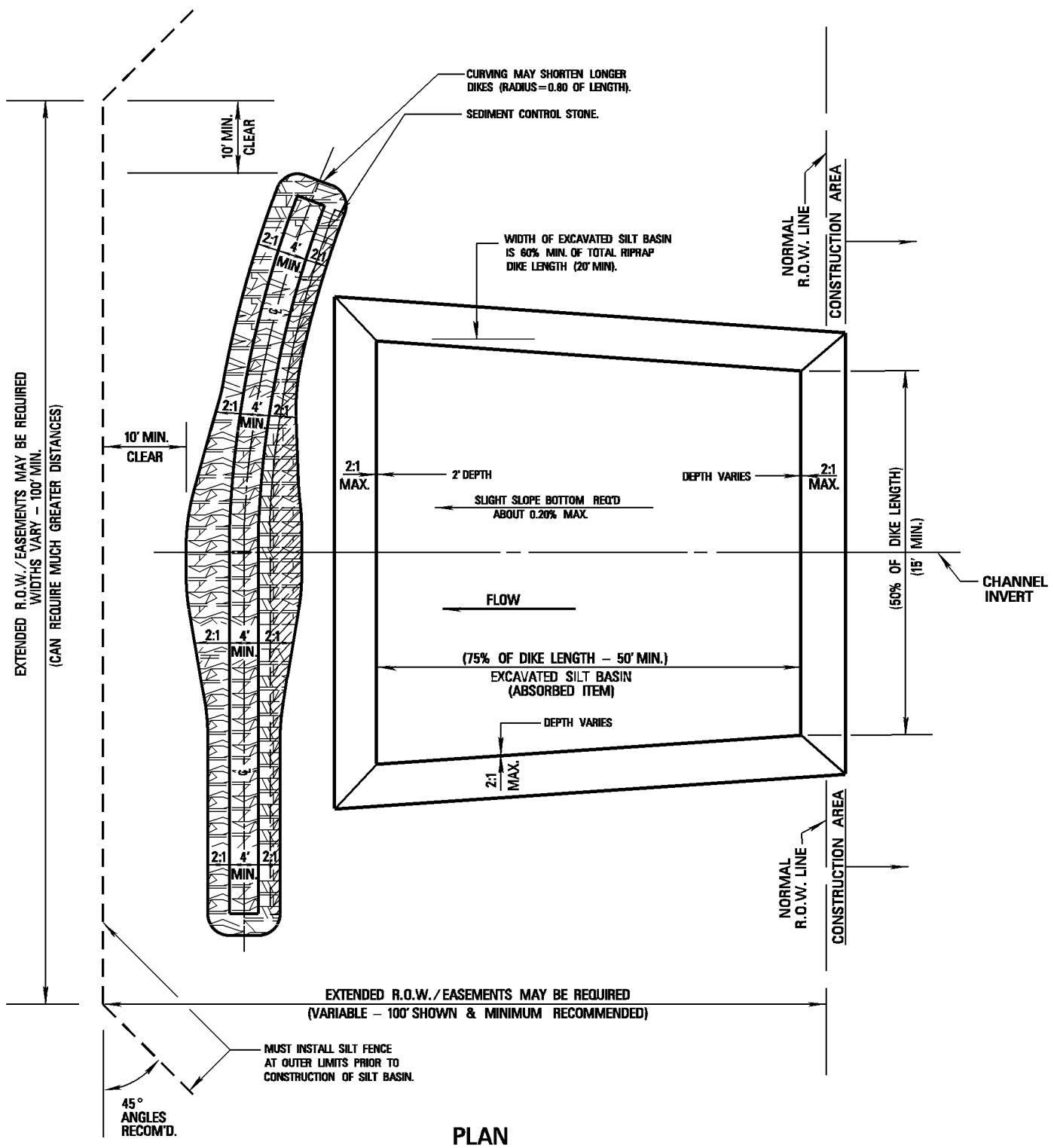

PLAN

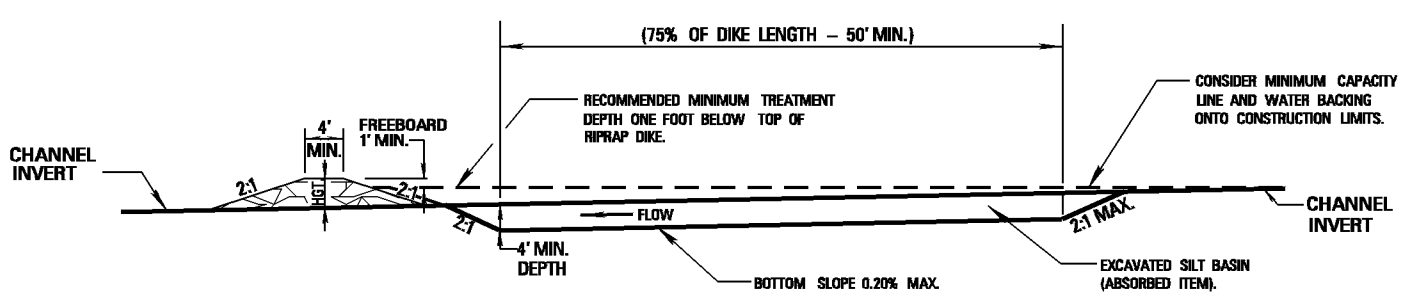

PROFILE

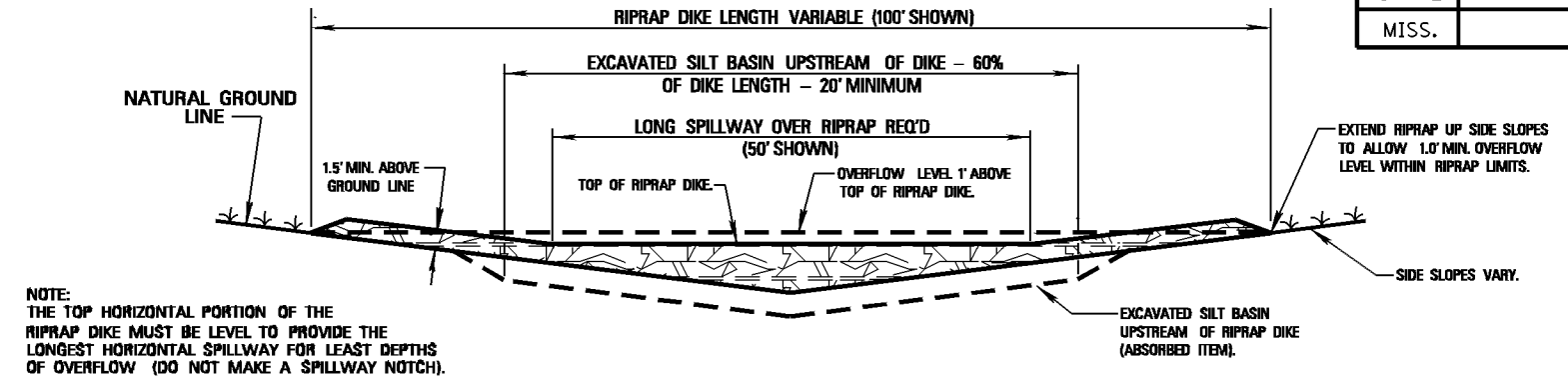

NOTE:
THE TOP HORIZONTAL PORTION OF THE RIPRAP DIKE MUST BE LEVEL TO PROVIDE THE LONGEST HORIZONTAL SPILLWAY FOR LEAST DEPTHS OF OVERFLOW (DO NOT MAKE A SPILLWAY NOTCH).

SECTION OF RIPRAP DIKE

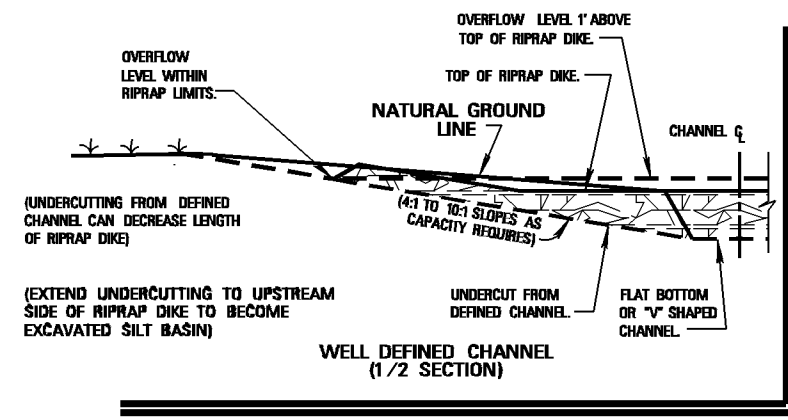

WELL DEFINED CHANNEL (1/2 SECTION)

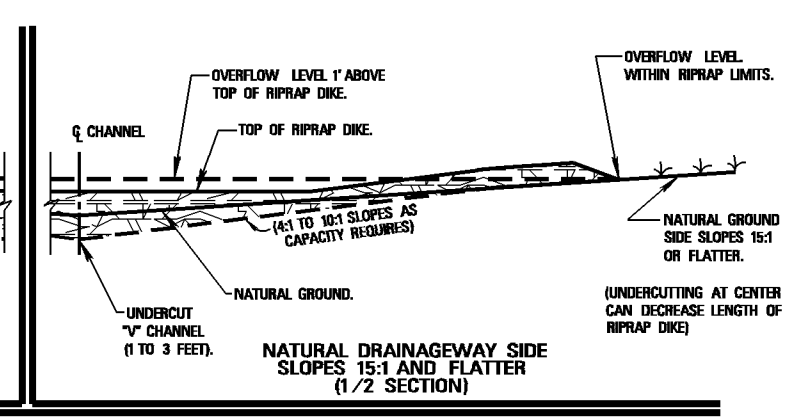

NATURAL DRAINAGEWAY SIDE SLOPES 15:1 AND FLATTER (1/2 SECTION)

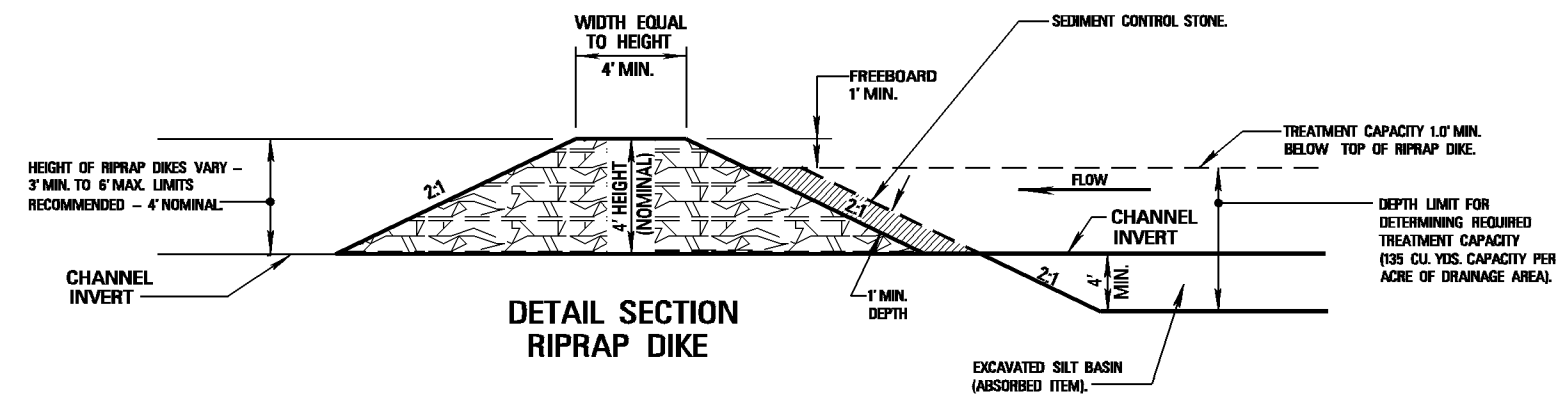

DETAIL SECTION RIPRAP DIKE

NOTES

1. RIPRAP DIKE SILT BASINS ARE TO BE PLACED IN SURFACE DRAINS (INCLUDING SELECTED CROSS DRAINS HAVING CULVERT OPENINGS OF 20 SQUARE FEET OR LESS, BUT NO LIVE–STREAMS) JUST BEFORE THE WATER (RUNOFF) LEAVES THE RIGHT OF WAY AND /OR ENTERS A WATER COURSE. LOCATION AND SIZE TO BE AS DIRECTED BY THE ENGINEER WHO SHALL REVISE THE SIZES AND /OR DESIGNATE SUPPLEMENTARY SILT FENCE AS REQUIRED. ALTERNATIVE TYPES OF SILT BASINS SHALL BE AS DIRECTED BY THE ENGINEER, WHERE RIPRAP DIKE SILT BASINS MAY REPLACE SOME RISER PIPE SILT BASINS.

2. THE REQUIRED SIZE /CAPACITY OF THE RIPRAP DIKE SILT BASIN IS TO PROVIDE AT LEAST 135 CUBIC YARDS OF VOLUME /CAPACITY PER ACRE OF DRAINAGE AREA RECEIVED THE RIPRAP DIKE SILT BASIN MUST BE MAINTAINED AT ALL TIMES TO ASSURE THE INTENDED FUNCTION, REMOVING THE ACCUMULATED SILT ROUTINELY AND /OR WHEN APPROACHING A 50% MAXIMUM DECREASE FROM THE EFFECTIVE DESIGN CAPACITY, AND RESTORING THE BASIN TO ITS ORIGINAL EFFECTIVE DESIGN CAPACITY.

3. THE CONTRACTOR SHALL BE REQUIRED TO FURNISH ALL MATERIALS, PERFORM ALL WORK FOR THE PROPER INSTALLATION, MAINTENANCE, AND REMOVAL OF TEMPORARY EROSION CONTROL MEASURES NECESSARY TO CONTROL SILTATION.

4. AFTER THE PURPOSE FOR THE SILT BASIN HAS BEEN SERVED, THE POSTS AND SILT FENCE SHALL BE REMOVED. THE RIP RAP AND SEDIMENT STONE SHALL BE REMOVED AND PLACED AT THE PIPE OUTLET. THE DISTURBED AREA SHALL BE SITE GRADED AND REVEGETATED AS DEEMED NECESSARY BY THE ENGINEER. ALL COSTS OF REMOVAL AND REPLACEMENT TO BE ABSORBED IN PAY ITEM FOR SILT BASIN.

5. RIPRAP FOR THE TYPE D SILT BASIN SHALL BE 300 LB RIPRAP AND SHALL BE PAID FOR – PER TON.

6. SEDIMENT CONTROL STONE SHALL BE SIZE NO. 57 STONE AND SHALL BE PAID FOR – PER TON.

7. THE TEMPORARY EROSION CONTROL MEASURES SHOWN ON THIS SHEET WILL ONLY BE MEASURED FOR SEPERATE PAYMENT WHEN APPROPRIATE PAY ITEMS ARE INCLUDED IN THE BID SCHEDULE OF THE PROPOSAL.

8. THE ACCUMULATED SILT SHALL BE REMOVED WHEN IT REACHES 1/3 TO 1/2 THE HEIGHT OF THE CONTROL FEATURE. SILT SHALL BE DISPOSED OF PROPERLY AND SHALL NOT BE DISPOSED OF IN THE VINCINITY OF THE EROSION CONTROL DEVICES.

DATE	REVISION	BY

MISSISSIPPI DEPARTMENT OF TRANSPORTATION

TYPICAL TEMPORARY EROSION CONTROL MEASURES (TYPE "D" SILT BASIN) (RIPRAP DIKE SILT BASIN)

PROJ. NO:
COUNTY:

WORKING NUMBER: TEC-D

FILENAME: EROSION CONTROL\TEC–D135.DGN

DESIGN TEAM _____ CHECKED _____ DATE _____

SHEET NUMBER

PLAN
ROADWAY DESIGN DIVISION C.A.D.D. SECTION
MISSISSIPPI DEPARTMENT OF TRANSPORTATION

S E C T I O N 9 0 3
PERFORMANCE AND PAYMENT BOND

CONTRACT BOND FOR: _____

LOCATED IN THE COUNTY(IES) OF: _____

STATE OF MISSISSIPPI,

COUNTY OF HINDS

Know all men by these presents: that we, _____
(Contractor)

_____ Principal, a _____

residing at _____ in the State of _____

and _____
(Surety)

residing at _____ in the State of _____,

authorized to do business in the State of Mississippi, under the laws thereof, as surety, are held and firmly bound unto the State of Mississippi in the sum of _____

_____

($_____) Dollars, lawful money of the United States of America, to be paid to it for which payment well and truly to be made, we bind ourselves, our heirs, administrators, successors, or assigns jointly and severally by these presents.

Signed and sealed this the _____ day of _____ A.D. _____.

The conditions of this bond are such, that whereas the said _____

_____

principal, has (have) entered into a contract with the Mississippi Transportation Commission, bearing the date of _____ day of _____ A.D. _____ hereto annexed, for the construction of certain projects(s) in the State of Mississippi as mentioned in said contract in accordance with the Contract Documents therefor, on file in the offices of the Mississippi Department of Transportation, Jackson, Mississippi.

Now therefore, if the above bounden _____

_____ in all things shall stand to and abide by and well and truly observe, do keep and perform all and singular the terms, covenants, conditions, guarantees and agreements in said contract, contained on his (their) part to be observed, done, kept and performed and each of them, at the time and in the manner and form and furnish all of the material and equipment specified in said contract in strict accordance with the terms of said contract which said plans, specifications and special provisions are included in and form a part of said contract and shall maintain the said work contemplated until its final completion and acceptance as specified in Subsection 109.11 of the approved specifications, and save harmless said Mississippi Transportation Commission from any loss or damage arising out of or occasioned by the negligence, wrongful or criminal act, overcharge, fraud, or any other loss or damage whatsoever, on the part of said principal (s), his (their) agents, servants, or employees in the performance of said work or in any manner connected therewith, and shall be liable and responsible in a civil

action instituted by the State at the instance of the Mississippi Transportation Commission or any officer of the State authorized in such cases, for double any amount in money or property, the State may lose or be overcharged or otherwise defrauded of, by reason of wrongful or criminal act, if any, of the Contractor(s), his (their) agents or employees, and shall promptly pay the said agents, servants and employees and all persons furnishing labor, material, equipment or supplies therefor, including premiums incurred, for Surety Bonds, Liability Insurance, and Workmen's Compensation Insurance; with the additional obligation that such Contractor shall promptly make payment of all taxes, licenses, assessments, contributions, damages, any liquidated damages which may arise prior to any termination of said principal's contract, any liquidated damages which may arise after termination of the said principal's contract due to default on the part of said principal, penalties and interest thereon, when and as the same may be due this state, or any county, municipality, board, department, commission or political subdivision: in the course of the performance of said work and in accordance with Sections 31-5-51 et seq. Mississippi Code of 1972, and other State statutes applicable thereto, and shall carry out to the letter and to the satisfaction of the Executive Director of the Mississippi Department of Transportation, all, each and every one of the stipulations, obligations, conditions, covenants and agreements and terms of said contract in accordance with the terms thereof and all of the expense and cost and attorney's fee that may be incurred in the enforcement of the performance of said contract, or in the enforcement of the conditions and obligations of this bond, then this obligation shall be null and void, otherwise to be and remain in full force and virtue.

Witness our signatures and seals this the _____ day of _____ A.D. _____.

_____	_____
(Contractors) Principal	Surety
By _____	By _____
	(Signature) Attorney in Fact
	Address _____
	_____
Title _____	_____
(Contractor's Seal)	(Printed) MS Agent
	_____
	(Signature) MS Agent
	Address _____
	_____
	_____
	(Surety Seal)
	_____
	Mississippi Insurance ID Number

KNOW ALL MEN BY THESE PRESENTS, that we _____
Contractor

_____
Address

_____
City, State ZIP

as Principal, hereinafter called the Principal, and _____
Surety

a corporation duly organized under the laws of the state of _____

as Surety, hereinafter called the Surety, are held and firmly bound unto **State of Mississippi, Jackson, Mississippi**

As Obligee, hereinafter called Obligee, in the sum of **Five Per Cent (5%) of Amount Bid**

Dollars ($ _____)

for the payment of which sum will and truly to be made, the said Principal and said Surety, bind ourselves, our heirs, executors, administrators, successors and assigns, jointly and severally, firmly by these presents.

WHEREAS, the Principal has submitted a bid for Project No. IM-0055-01(097)/105877301.

NOW THEREFORE, the condition of this obligation is such that if the aforesaid Principal shall be awarded the contract, the said Principal will, within the time required, enter into a formal contract and give a good and sufficient bond to secure the performance of the terms and conditions of the contract, then this obligation to be void; otherwise the Principal and Surety will pay unto the Obligee the difference in money between the amount of the bid of the said Principal and the amount for which the Obligee legally contracts with another party to perform the work if the latter amount be in excess of the former, but in no event shall liability hereunder exceed the penal sum hereof.

Signed and sealed this _____ day of _____ , 20___

_____
(Principal) (Seal)

_____ By: _____
(Witness) (Name) (Title)

_____
(Surety) (Seal)

_____ By: _____
(Witness) (Attorney-in-Fact)

_____
MS Agent

_____
Mississippi Insurance ID Number

OCR-485
REV. 3/08

MISSISSIPPI DEPARTMENT OF TRANSPORTATION
OFFICE OF CIVIL RIGHTS
JACKSON, MISSISSIPPI

LIST OF FIRMS SUBMITTING QUOTES

I/we received quotes from the following firms on Project No: _____
County: _____

Disadvantaged Business Enterprise (DBE) Regulations as stated in 49 CFR 26.11 require the Mississippi Department of Transportation (MDOT) to create and maintain a comprehensive list of all firms quoting/bidding subcontracts on prime contracts and quoting/bidding subcontracts on federally-funded transportation projects. For every firm, we require the following information:

Firm Name: _____
Contact Name/Title: _____
Firm Mailing Address: _____
Phone Number: _____
_____ DBE Firm _____ Non-DBE Firm

Firm Name: _____
Contact Name/Title: _____
Firm Mailing Address: _____
Phone Number: _____
_____ DBE Firm _____ Non-DBE Firm

Firm Name: _____
Contact Name/Title: _____
Firm Mailing Address: _____
Phone Number: _____
_____ DBE Firm _____ Non-DBE Firm

Firm Name: _____
Contact Name/Title: _____
Firm Mailing Address: _____
Phone Number: _____
_____ DBE Firm _____ Non-DBE Firm

Firm Name: _____
Contact Name/Title: _____
Firm Mailing Address: _____
Phone Number: _____
_____ DBE Firm _____ Non-DBE Firm

_____
SUBMITTED BY (Signature)

_____
FIRM NAME

Submit this form to **Contract Administration as a part of your bid package**. If this form is not **signed** and included as part of the bid packet, your bid will be deemed irregular. For further information about this form, call Mississippi DOT's Office of Civil Rights at (601) 359-7466; FAX (601) 576-4504.
Please make copies of this form when needed and also add those copies to the bid package.

OCR-485
REV. 3/08

MISSISSIPPI DEPARTMENT OF TRANSPORTATION
OFFICE OF CIVIL RIGHTS
JACKSON, MISSISSIPPI

LIST OF FIRMS SUBMITTING QUOTES

I/we received quotes from the following firms on Project No: _____
County: _____

Disadvantaged Business Enterprise (DBE) Regulations as stated in 49 CFR 26.11 require the Mississippi Department of Transportation (MDOT) to create and maintain a comprehensive list of all firms quoting/bidding subcontracts on prime contracts and quoting/bidding subcontracts on federally-funded transportation projects. For every firm, we require the following information:

Firm Name: _____
Contact Name/Title: _____
Firm Mailing Address: _____
Phone Number: _____
_____ DBE Firm _____ Non-DBE Firm

Firm Name: _____
Contact Name/Title: _____
Firm Mailing Address: _____
Phone Number: _____
_____ DBE Firm _____ Non-DBE Firm

Firm Name: _____
Contact Name/Title: _____
Firm Mailing Address: _____
Phone Number: _____
_____ DBE Firm _____ Non-DBE Firm

Firm Name: _____
Contact Name/Title: _____
Firm Mailing Address: _____
Phone Number: _____
_____ DBE Firm _____ Non-DBE Firm

Firm Name: _____
Contact Name/Title: _____
Firm Mailing Address: _____
Phone Number: _____
_____ DBE Firm _____ Non-DBE Firm

_____
SUBMITTED BY (Signature)

_____
FIRM NAME

Submit this form to **Contract Administration as a part of your bid package**. If this form is not **signed** and included as part of the bid packet, your bid will be deemed irregular. For further information about this form, call Mississippi DOT's Office of Civil Rights at (601) 359-7466; FAX (601) 576-4504.
Please make copies of this form when needed and also add those copies to the bid package.

OCR-485
REV. 3/08

MISSISSIPPI DEPARTMENT OF TRANSPORTATION
OFFICE OF CIVIL RIGHTS
JACKSON, MISSISSIPPI

LIST OF FIRMS SUBMITTING QUOTES

I/we received quotes from the following firms on Project No: _____
County: _____

Disadvantaged Business Enterprise (DBE) Regulations as stated in 49 CFR 26.11 require the Mississippi Department of Transportation (MDOT) to create and maintain a comprehensive list of all firms quoting/bidding subcontracts on prime contracts and quoting/bidding subcontracts on federally-funded transportation projects. For every firm, we require the following information:

Firm Name: _____
Contact Name/Title: _____
Firm Mailing Address: _____
Phone Number: _____
_____ DBE Firm _____ Non-DBE Firm

Firm Name: _____
Contact Name/Title: _____
Firm Mailing Address: _____
Phone Number: _____
_____ DBE Firm _____ Non-DBE Firm

Firm Name: _____
Contact Name/Title: _____
Firm Mailing Address: _____
Phone Number: _____
_____ DBE Firm _____ Non-DBE Firm

Firm Name: _____
Contact Name/Title: _____
Firm Mailing Address: _____
Phone Number: _____
_____ DBE Firm _____ Non-DBE Firm

Firm Name: _____
Contact Name/Title: _____
Firm Mailing Address: _____
Phone Number: _____
_____ DBE Firm _____ Non-DBE Firm

_____
SUBMITTED BY (Signature)

_____
FIRM NAME

Submit this form to **Contract Administration as a part of your bid package**. If this form is not **signed** and included as part of the bid packet, your bid will be deemed irregular. For further information about this form, call Mississippi DOT's Office of Civil Rights at (601) 359-7466; FAX (601) 576-4504.
Please make copies of this form when needed and also add those copies to the bid package.