STATE	PROJECT NO.
MISS.	F-014-3(11)

PAY ITEM NO.	PAY ITEM	UNIT	QUANTITIES PRELIMINARY	QUANTITIES FINAL
	BRIDGE SUMMARY			
801	FOUNDATION EXC. FOR BRIDGES	C.Y.	4,141	
803-A	TEST PILES (14" x 14" CONC.)	EACH	2	
803-A	TEST PILES (16" x 16" CONC.)	EACH	5	
803-B	LOADING TESTS	EACH	4	
803-F	14" x 14" PRESTRESSED CONC. PILING	L.F.	9,620	
803-F	16" x 16" PRESTRESSED CONC. PILING	L.F.	16,615	
804-B	CLASS "B" BRIDGE CONCRETE	C.Y.	6,262.39	
804-T	55'-11" PREST. CONC. BEAMS	L.F.	446.67	
804-T	58'-0" PREST. CONC. BEAMS	L.F.	459.67	
804-T	66'-0" PREST. CONC. BEAMS	L.F.	260.67	
804-T	70'-11" PREST. CONC. BEAMS	L.F.	283.51	
804-T	77'-0" PREST. CONC. BEAMS	L.F.	1,535.00	
804-T	113'-0" PREST. CONC. BEAMS	L.F.	3,833.50	
805	REINFORCEMENT	Lb.	1,542,910	
813-A	CONCRETE RAILING	L.F.	2,406.92	
813-F	CONC. MEDIAN BARRIER RAILING	L.F.	550	
815-D	CONCRETE SLOPE PAVING	C.Y.	531	

11008
10996-1
11054
11071

DATE	REVISIONS	BY

MISSISSIPPI STATE HIGHWAY DEPARTMENT

SUMMARY OF QUANTITIES
(BRIDGE ITEMS)

PROJECT F-014-3(11)
11-0014-03-011-10

FORREST COUNTY

WORKING NUMBER

DESIGNED HSH DETAILED W.D.W. TRACED W.D.W.
CHECKED HSH ISSUED DATE 2-23-79

SHEET NUMBER 18

BRUNING 44-141 39869

STATE	PROJECT NO.
MISS.	F-014-3(11)

BRIDGE	BEGIN STATION	SPANS~ SIZE	OVERALL LENGTH	ITEM	Class "B" Bridge Concrete C.Y.	Reinforcement Lb.	Concrete Railing L.F.	55'-11" Prest. Concrete Beams L.F.	58' Prest. Concrete Beams L.F.	66' Prest. Concrete Beams L.F.	70'-11" Prest. Concrete Beams L.F.	77' Prest. Concrete Beams L.F.	113' Prest. Concrete Beams L.F.	14"x14" Prest. Concrete Piling L.F.	16"x16" Prest. Concrete Piling L.F.	14"x14" Prest. Concrete Test Piles Each	16"x16" Prest. Concrete Test Piles Each	Loading Tests Each	Concrete Slope Paving C.Y.	Foundation Excavation For Bridges C.Y.	Conc. Median Barrier Railing L.F.
A 11008	71+90.15	1@58' 1@66' 1@58'	182'	Spans	142.21	37,254	364		459.67	260.67				960		1			78	132	
				End Bents.	58.50	8,035								945							
				Int. Bents	109.42	20,409															
			BRIDGE	A TOTALS	310.53	65,698	364		459.67	260.67				1,905		1		1	78	132	
B 10996-1	1,070+61.39	1@56'-7" 1@71'-9½" 1@56'-7"	184.92	Spans	121.10	33,553	184.92	446.67			283.51			760		1			49	123	
				End Bents	41.38	5,960								945							
				Int. Bents	100.70	18,448															
			BRIDGE	B TOTALS	263.18	57,961	184.92	446.67			283.51			1,705		1		1	49	123	
C 11054	384+65.925	*549'	549'	Spans	2,445.13	766,069	1098							3,010			3		170	2,913	550
				End Bents	1,09.40	14,621									10,215						
				Int. Bents	1,518.76	276,199															
			BRIDGE	C TOTALS	4,073.89	1,056,889	1,098							3,010	10,215		3	1	170	2,913	550
D 11071	457+50	1@77' 2@113' 1@77'		Spans	878.52	190,312	760					1,535.00	3,833.50	3,000			2		234	973	
				End Bents	140.45	16,062									6,400						
				Int. Bents	595.82	155,988															
			BRIDGE	D TOTALS	1,614.79	362,362	760					1,535.00	3,833.50	3,000	6,400		2	1	234	973	

* Continuous Concrete Box Girder Span (75'-112'-112'-150'-100')

11008
10996-1
11054
11071

REVISIONS	BY	DATE

MISSISSIPPI STATE HIGHWAY DEPARTMENT

ESTIMATED BRIDGE QUANTITIES

PROJECT F-014-3(11)
11-0014-03-011-10

FORREST COUNTY

DESIGNED HSH DETAILED HSH TRACED DWV
CHECKED HSH ISSUED DATE

WORKING NUMBER

SHEET NUMBER 22

BRUNING 44-141 39869

STATE	PROJECT NO.
MISS.	F-014-3(11)

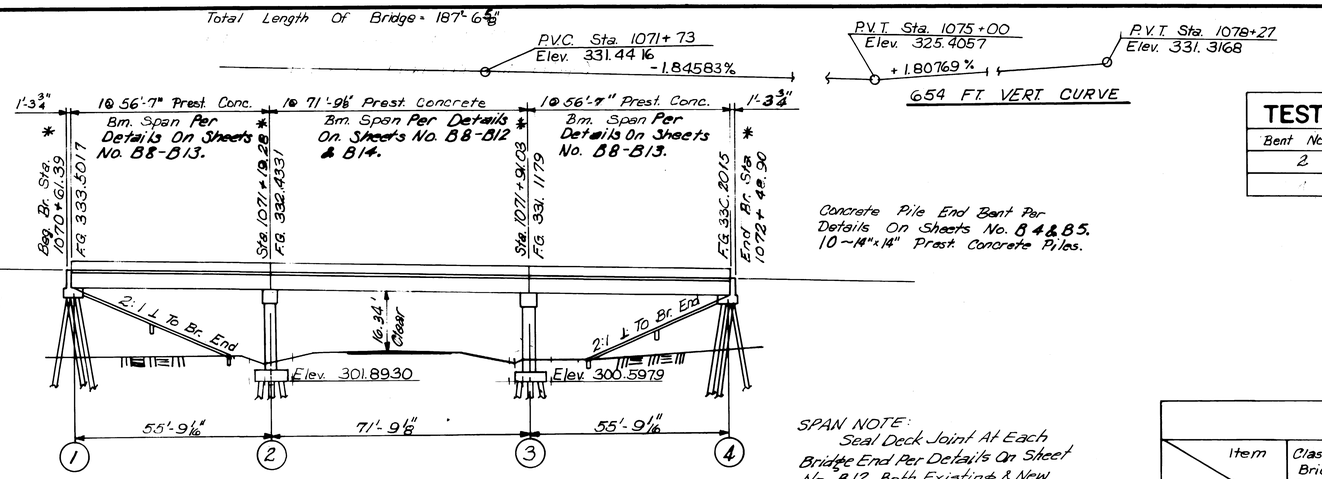

ELEVATION-WITH PROFILE ALONG E. TO N. RAMP

Scale 1"=20'-0"

End Bents: 14"x14" Conc. x 40'
Int. Bents: 14"x14" Conc. x 35'

SPAN NOTE: Seal Deck Joint At Each Bridge End Per Details On Sheet No. B12, Both Existing & New Construction.

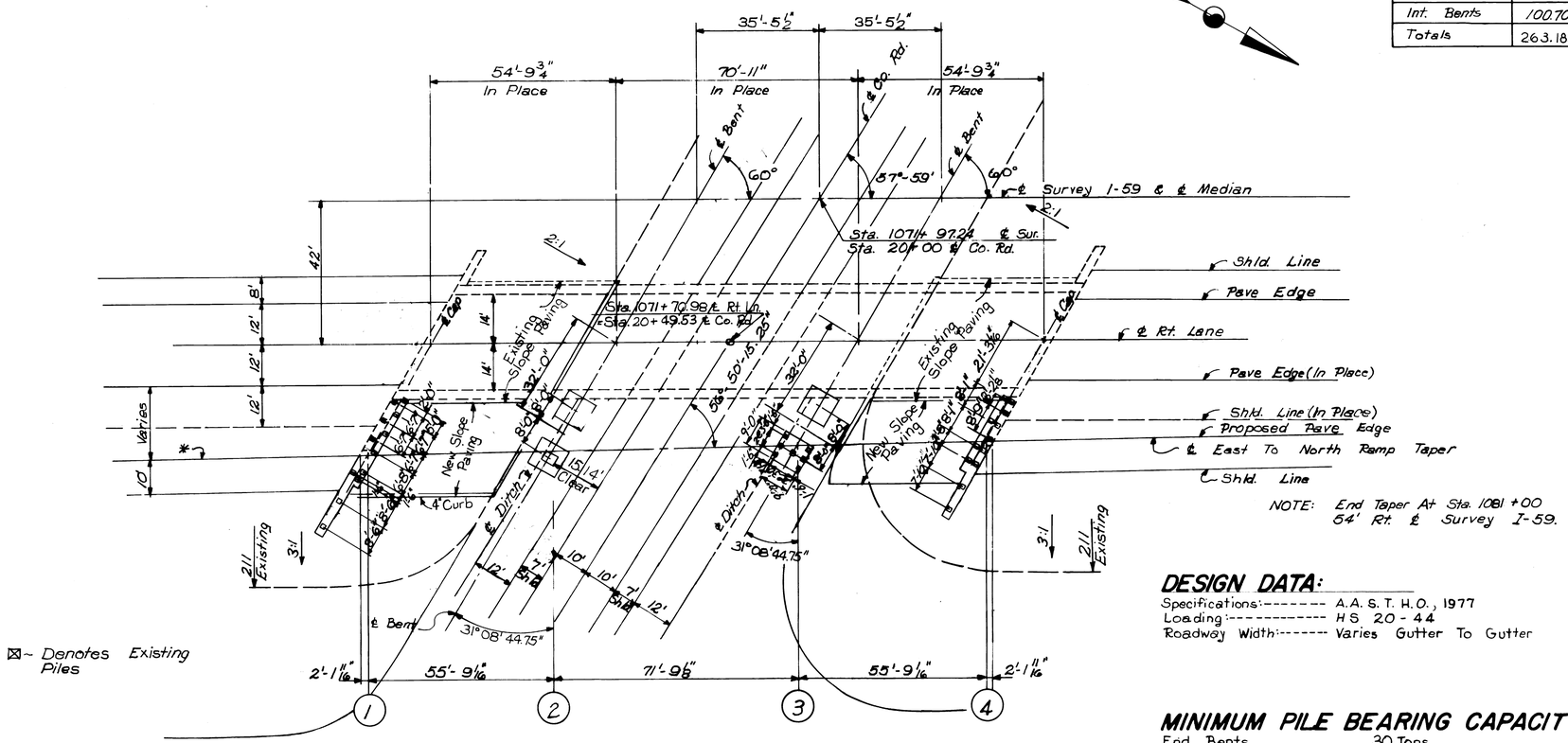

NOTE: End Taper At Sta. 1081+00 64' Rt. ℄ Survey I-59.

⊠ ~ Denotes Existing Piles

PLAN

Scale: 1" = 20'-0"

TEST PILE SCHEDULE

Bent No.	Min. Lgth.-Ft.	Tip Elevation
2	50	262.89

NOTE: See End Bent Details On Sh. No. B5 For Bars Extending From Cap Into Slope Paving. Bend In Field To Fit Slope.

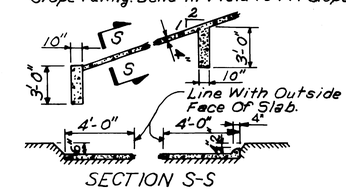

SECTION S-S

SLOPE PAVING DETAILS

ESTIMATED QUANTITIES

Item / Location	Class "B" Bridge Concrete C.Y.	Reinforcement Lb.	Concrete Railing L.F.	85'-11" Prestressed Conc. Beams L.F.	70'-11" Prestressed Conc. Beams L.F.	14"x14" Prestressed Conc. Piling L.F.	14"x14" Prest. Conc. Test Pile Each	Loading Test Each	Concrete Slope Paving C.Y.	Foundation Excavation For Bridge C.Y.
Spans	121.10	33,553	184.02	446.67	283.51					
End Bents	41.38	5,960				760			49	
Int. Bents	100.70	18,448				945	1			123
Totals	263.18	57,961	184.02	446.67	283.51	1,705	1	1	49	123

GENERAL NOTES:

Specifications: Mississippi State Highway Department, 1976.
No Change Of Plans Will Be Permitted Except By Written Authority Of The Bridge Engineer. Minor Changes In Details Of Design Or Construction May Be Authorized In Writing By The Bridge Engineer, Provided Such Changes Are Not Justifiable Reasons For Contract Price Adjustment.
Expansion Joint Material Shall Be Bituminous Fiber Type Unless Otherwise Noted.
The Final Surface Texture Of The Bridge Deck Shall Be Attained By Use Of The Drag Finish, Broom Finish Or Belt Finish Method, Per Section 501.15 G Of The Specifications.
All Concrete Piles Shall Be Prestressed Type Per Sheet No. D19.
Test Piles Shall Be Driven As Permanent Piles At The Locations And To The Tip Elevations Shown In The TEST PILE SCHEDULE As Shown On This Sheet Unless Otherwise Directed By The Bridge Engineer And Will Be Paid For As Test Piles Only.
In The Event Load Tests Are Required, The Maximum Test Load Shall Be 78 Tons. (See Sheet No. D20).
Test Pile Data And Recommended Pile Lengths Shall Be Submitted To The Bridge Engineer For Approval.
Shop Drawings Of Prestressed Beams, Including An Erection Plan, Shall Be Submitted In Duplicate To The Bridge Engineer For Approval Prior To Manufacture Of Beams.
No Payment Will Be Allowed For Excavation Incidental To The Construction Of End Bents.
Bar Bending Details Shall Be In Accordance With "Manual Of Standard Practice For Detailing Reinforced Concrete Structures" (ACI 315-57).
All Work For Which No Pay Items Are Provided In The Proposal Will Not Be Paid For Directly And Compensation Therefor Will Be Considered Included In The Prices And Payments For Bid Items.

DESIGN DATA:

Specifications:------- A.A.S.T.H.O., 1977
Loading:---------- HS 20-44
Roadway Width:------- Varies Gutter To Gutter

MINIMUM PILE BEARING CAPACITY:

End Bents 30 Tons
Int. Bents 31 Tons

BY	REVISIONS	DATE

MISSISSIPPI STATE HIGHWAY DEPARTMENT

OVERPASS AT STA. 1070+61.39
RT. LANE I-59 & E. TO N.
RAMP OVER CO. ROAD

PROJECT F-014-3(11)
11-0014-03-011-10

FORREST COUNTY

WORKING NUMBER B1 of 14

SHEET NUMBER 479

DESIGNED W.F.M. DETAILED W.F.M. TRACED W.D.W.
CHECKED J.R.R. ISSUED 1/10 DATE 12-20-78

10996-1

STATE	PROJECT NO.
MISS.	F-014-3(11)

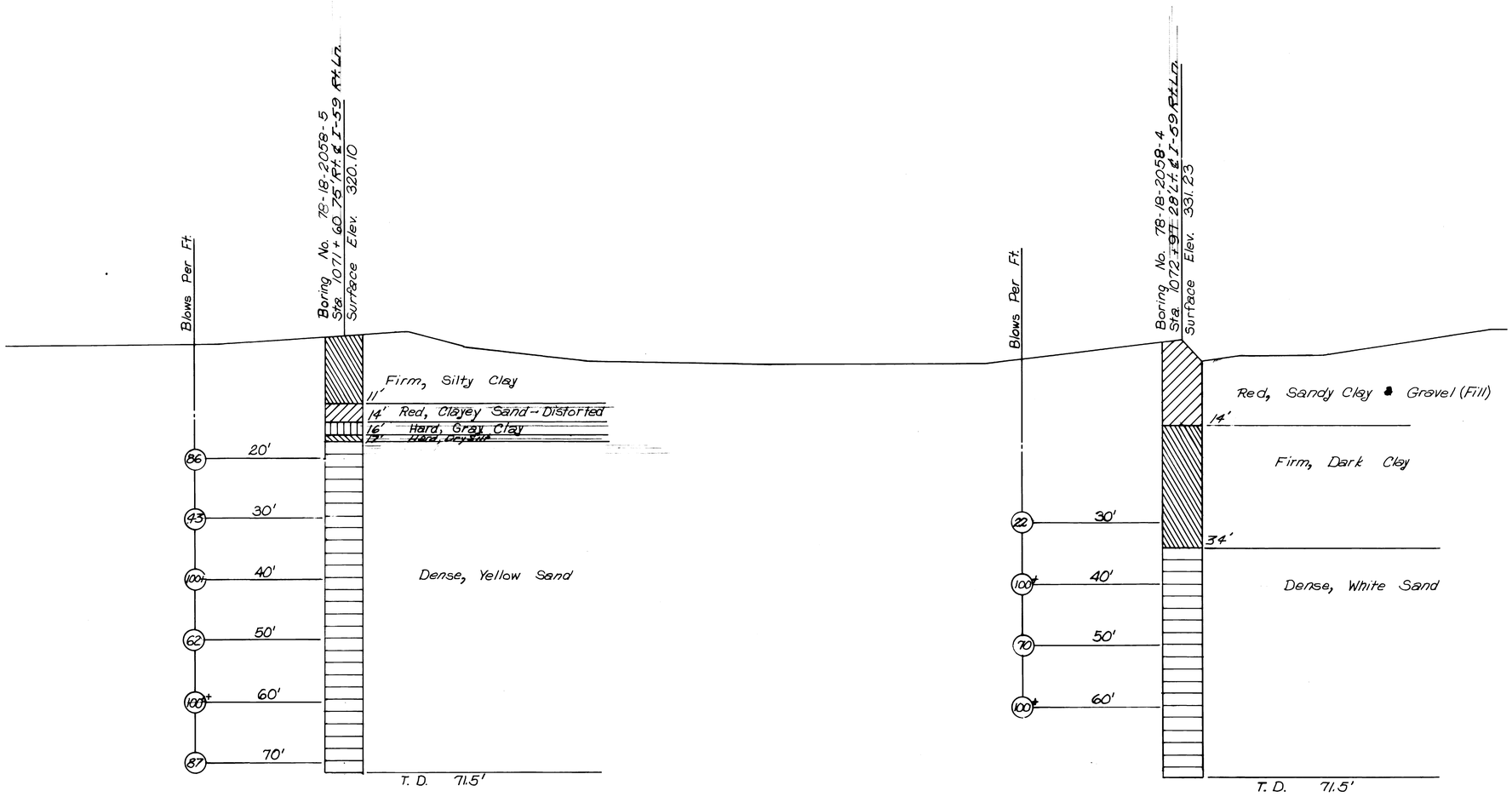

BORING DATA

NOTE: Boring Data Shown For Information Only And Its Accuracy For Construction Purposes Is Not Guaranteed.

BY	REVISIONS	DATE

MISSISSIPPI STATE HIGHWAY DEPARTMENT

OVERPASS AT STA. 1070+61.39

LOG OF BORINGS

PROJECT F-014-3(11)
11-0014-03-011-10

FORREST COUNTY

DESIGNED W.F.M. DETAILED W.D.W. TRACED W.D.W.
CHECKED J.R.R. ISSUED DATE 12-22-78

WORKING NUMBER B2 of 14

SHEET NUMBER 480

10996-1

STATE	PROJECT NO.
MISS.	F-014-3(11)

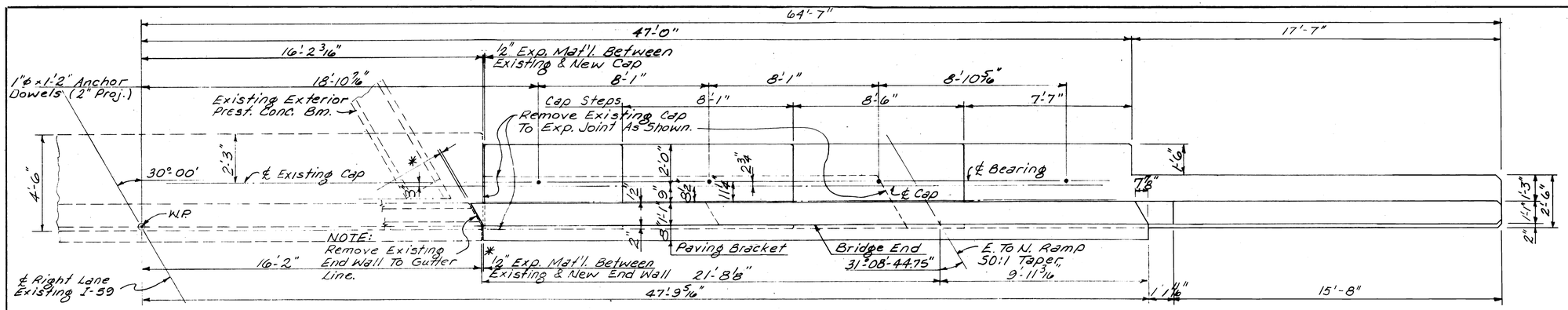

NOTE: Care Shall Be Taken When Removing Existing Concrete So As Not To Damage Existing Reinforcing & Piles.

PLAN OF END BENT NO. 1R

Showing Concrete Dimensions & Anchor Dowel Spacing

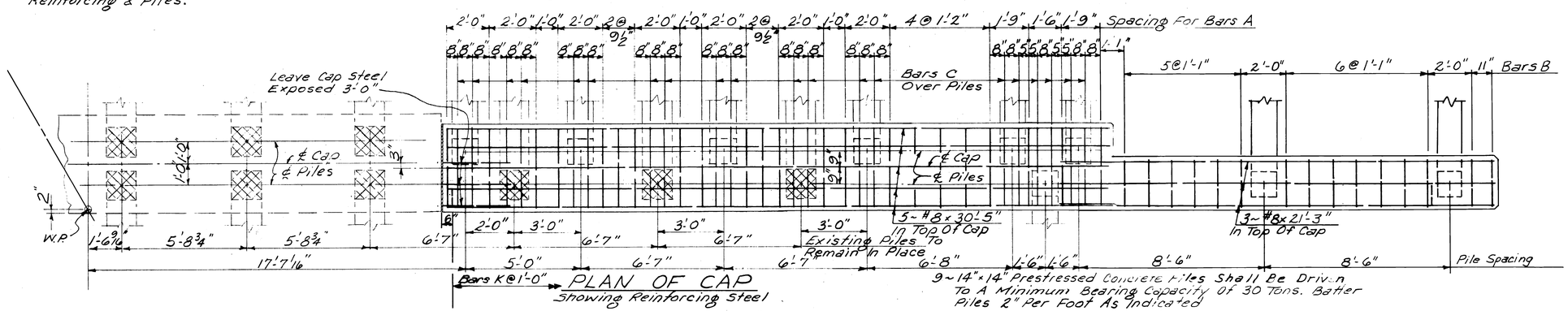

PLAN OF CAP

Showing Reinforcing Steel

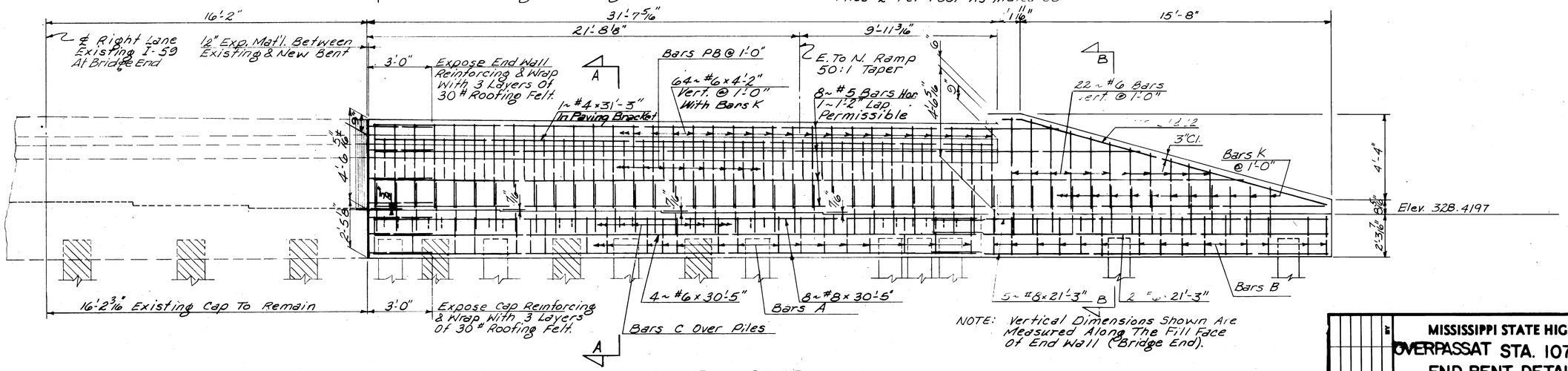

NOTE: Vertical Dimensions Shown Are Measured Along The Fill Face Of End Wall (Bridge End).

ELEVATION FROM FILL SIDE ~ END BENT NO. 1R

NOTE: For GENERAL NOTES, Bar Bending Details, Sections And Other Typical Details See Sheet No. B3.

MISSISSIPPI STATE HIGHWAY DEPARTMENT

OVERPASS AT STA. 1070+61.39

END BENT DETAILS

PROJECT F-014-3(11) 11-0014-03-011-10

FORREST COUNTY

WORKING NUMBER	B3 of 14
SHEET NUMBER	481

DESIGNED WEM DETAILED WEM TRACED RT

CHECKED J.R.R. ISSUED DATE 12-20-78

REVISIONS BY DATE

10996-1

STATE	PROJECT NO.
MISS.	F-014-3(11)

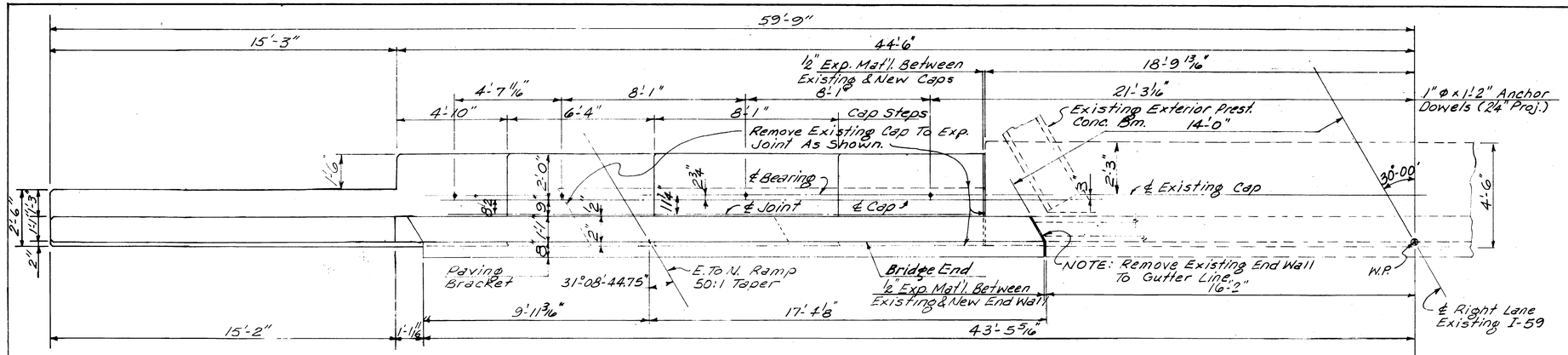

PLAN OF END BENT NO. 4R

Showing Concrete Dimensions & Anchor Dowel Spacing

NOTE: Care Shall Be Taken When Removing Existing Concrete So As Not To Damage Existing Reinforcing And Piles.

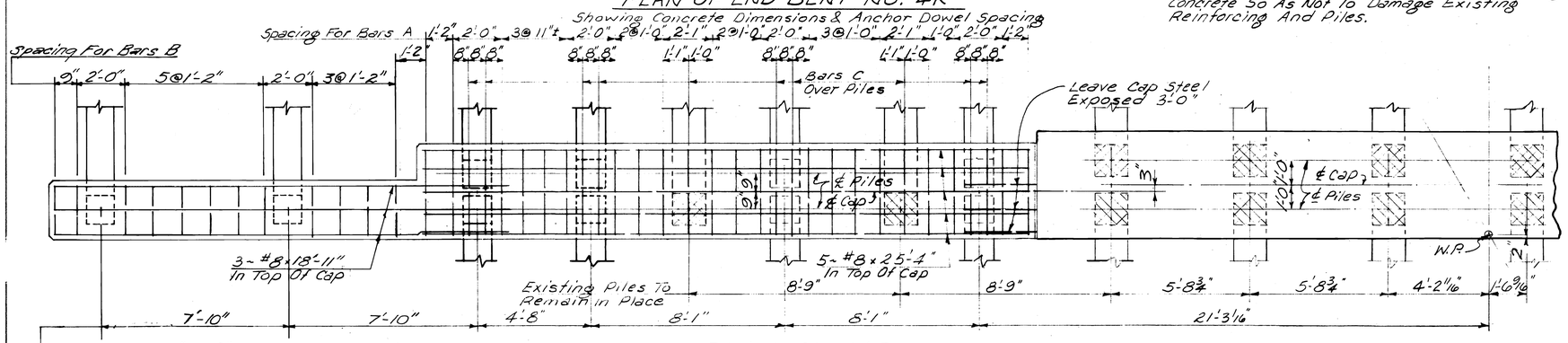

10 - 14" x 14" Prestressed Concrete Piles Driven To A Minimum Bearing Capacity Of 30 Tons. Batter Piles 2" Per Foot As Indicated.

PLAN OF CAP

Showing Reinforcing Steel

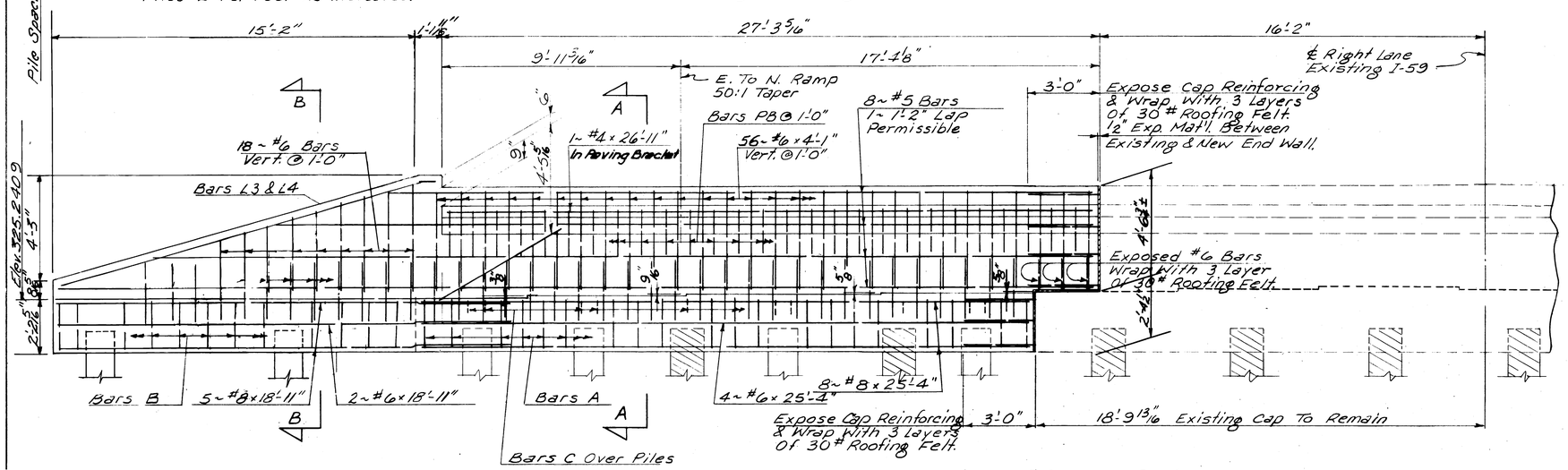

ELEVATION FROM FILL SIDE ~ END BENT NO. 4R

NOTE: Vertical Dimensions Shown Are Measured Along The Fill Face Of End Wall (Bridge End).

NOTE: For GENERAL NOTES, Bar Bending Details, Sections And Other Typical Details See Sheet No 85.

MISSISSIPPI STATE HIGHWAY DEPARTMENT

OVERPASS AT STA. 1070+61.39

END BENT DETAILS

PROJECT F-014-3(11) 11-0014-03-011-10

FORREST COUNTY

WORKING NUMBER 84 of 14

SHEET NUMBER 482

DESIGNED WEM DETAILED WEM TRACED RT

CHECKED JRR ISSUED DATE 12-20-78

10996-1

STATE	PROJECT NO.
MISS.	F-014-3(11)

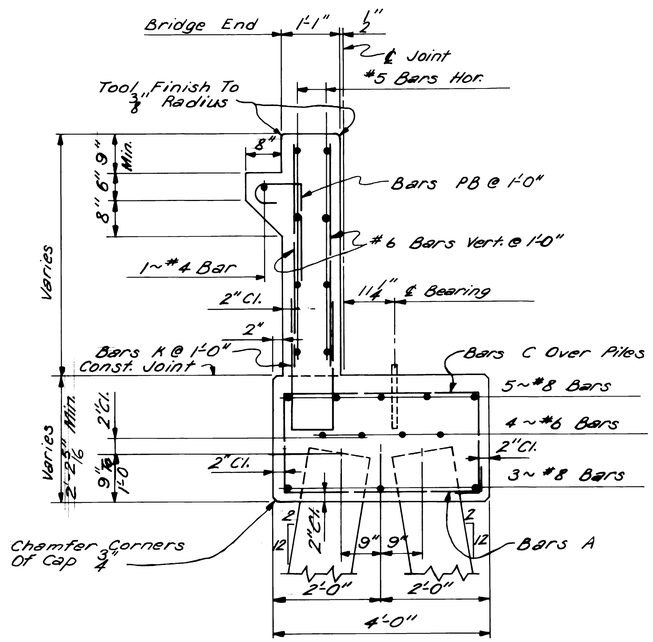

SECTION A~A

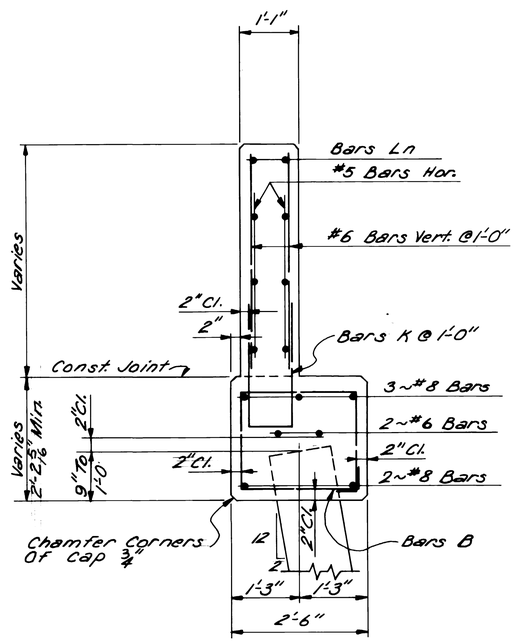

SECTION B~B

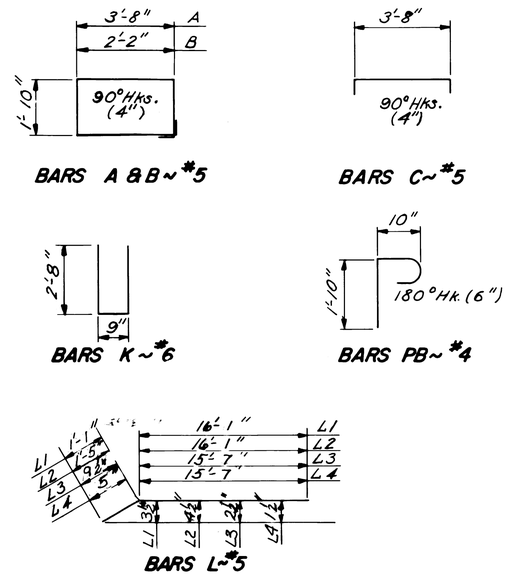

BAR BENDING DETAILS

Dimensions Are Out To Out

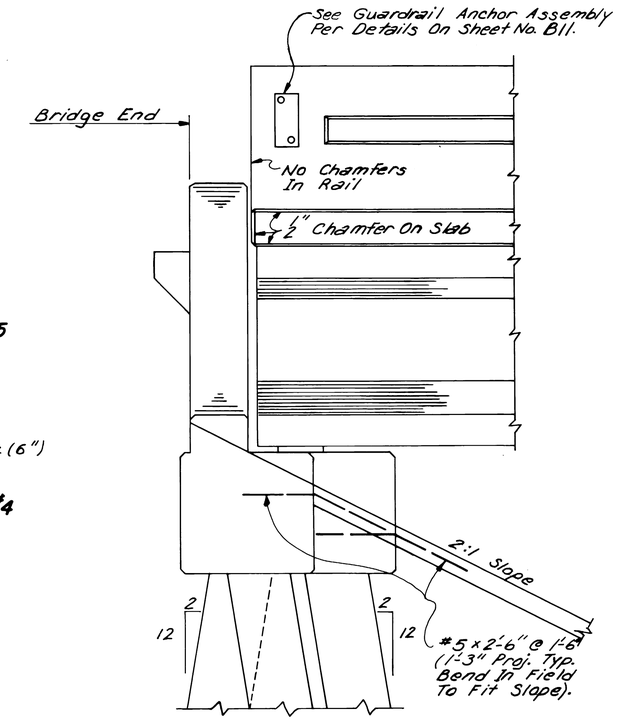

END ELEVATION

GENERAL NOTES:

All Concrete Shall Be Class "B".
Chamfer All Exposed Edges ½" Except As Noted.
Dimensions From Reinforing Steel To Concrete Surfaces Are Clear Distances.
Piles For End Bents Shall Not Be Driven Until Fill At Bridge End Has Been Constructed To Grade.
Wing Walls Above Construction Joint At Top Of Cap Shall Be Constructed After End Span Is In Place And Forms Removed.

DATE	REVISIONS	BY	MISSISSIPPI STATE HIGHWAY DEPARTMENT

OVERPASS AT STA. 1070+61.39
END BENT DETAILS

PROJECT F-014-3(11)
11-0014-03-011-10

FORREST COUNTY

DESIGNED WFM DETAILED WFM TRACED DMS
CHECKED JRR ISSUED DATE 12-20-78

WORKING NUMBER B5 of 14
SHEET NUMBER 483

10996-1

STATE	PROJECT NO.
MISS.	F-014-3(11)

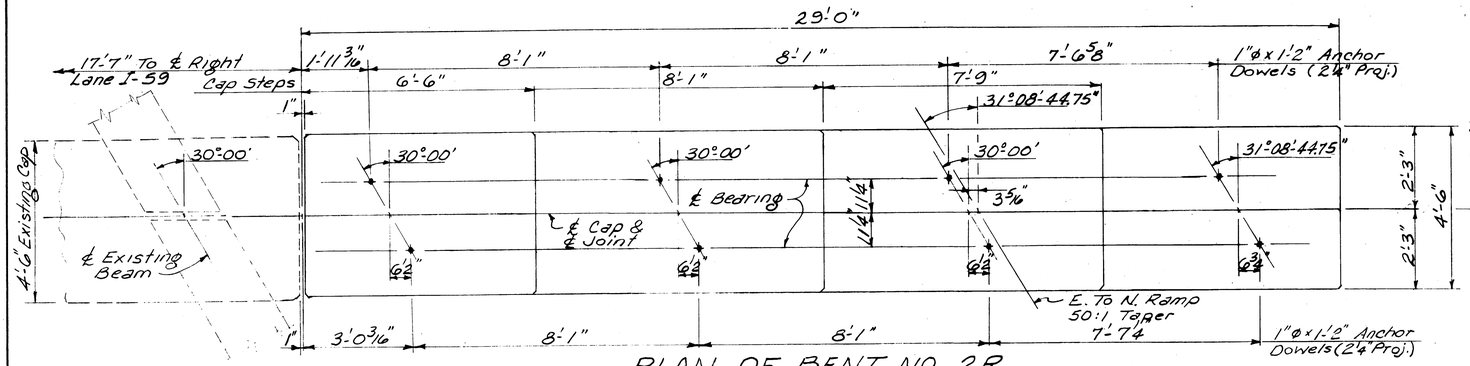

PLAN OF BENT NO. 2R

Showing Concrete Dimensions & Anchor Dowel Spacing

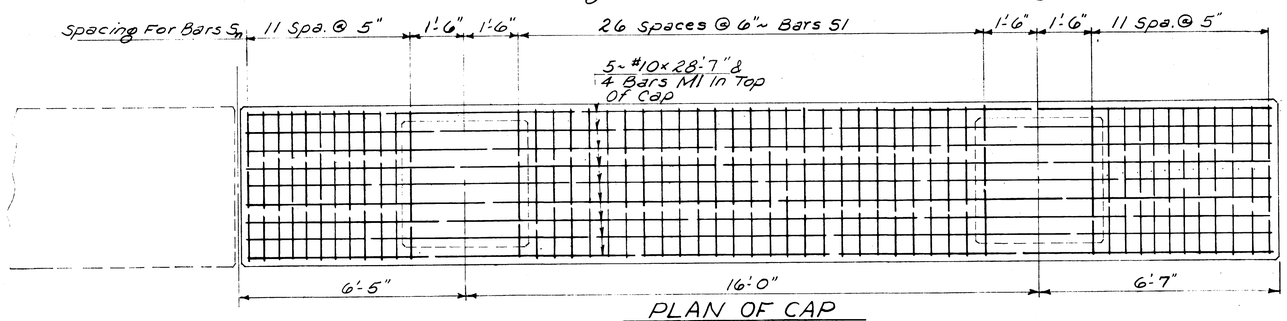

PLAN OF CAP

Showing Reinforcing Steel

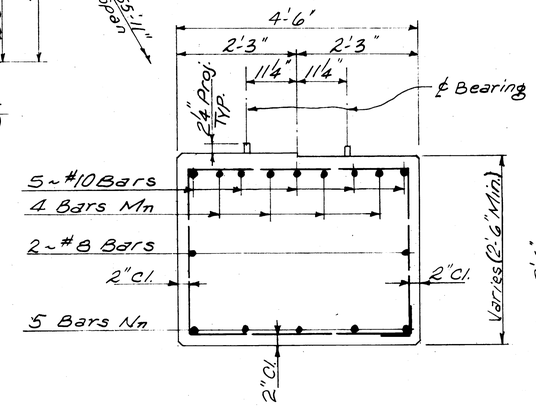

SECTION A-A

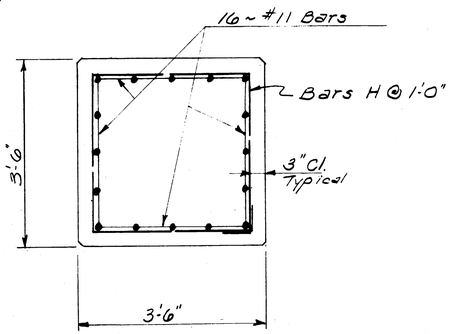

SECTION B-B

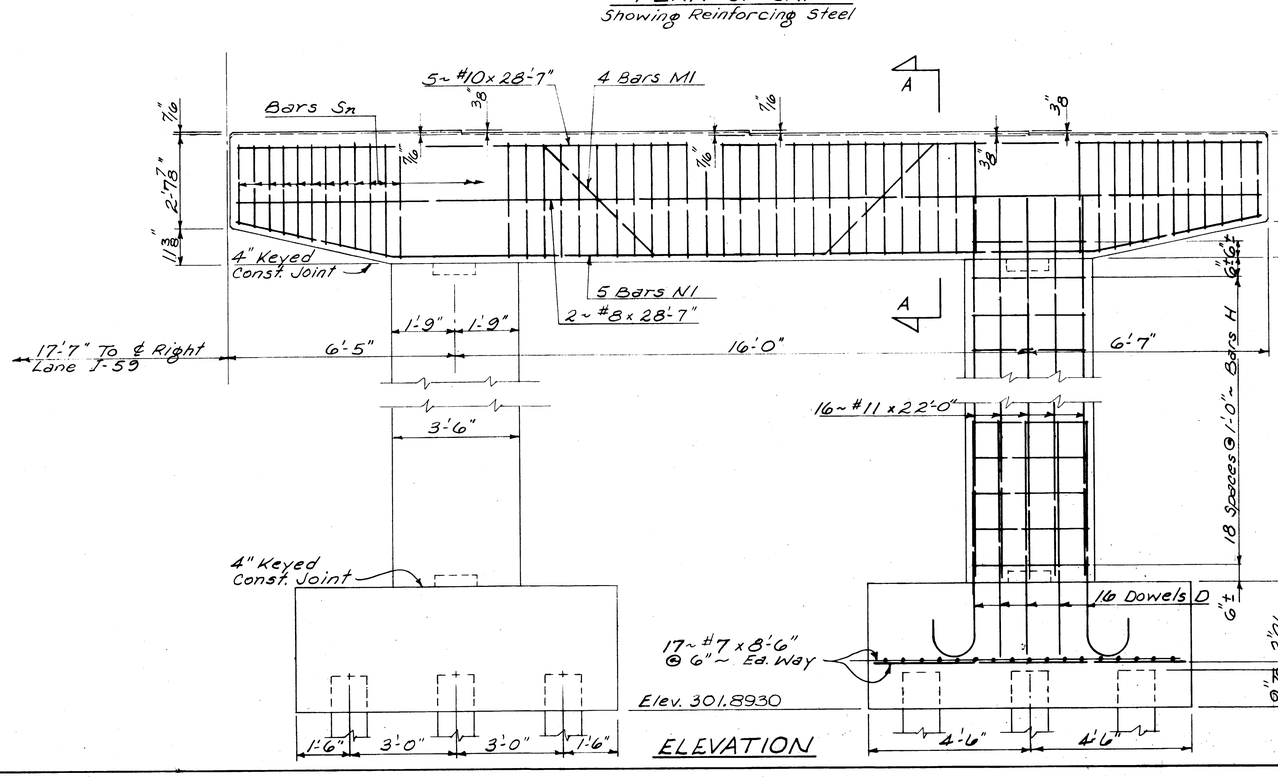

ELEVATION

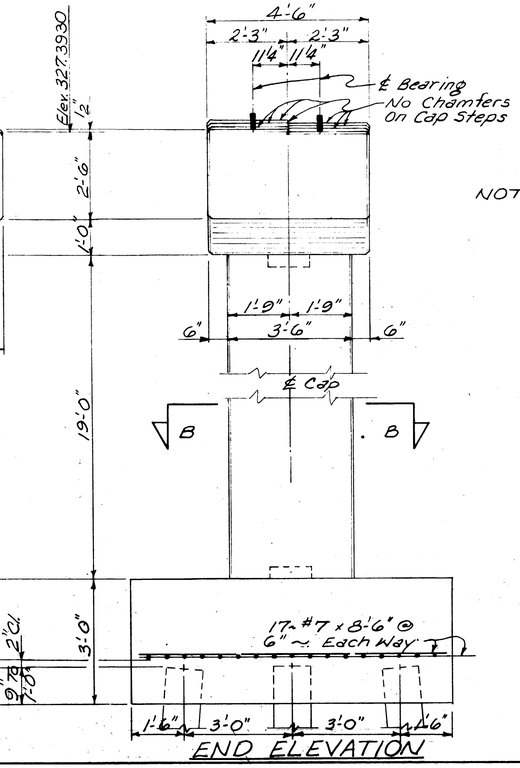

END ELEVATION

NOTE: For Bar Bending Details And Footing Plan See Sheet No. B7.

GENERAL NOTES:

All Concrete Shall Be Class "B".
Chamfer All Exposed Edge 3/4", Unless Otherwise Noted.
Construction Joints Are Permitted Only Where Shown.
Dimensions From Reinforcing Steel To Concrete Surfaces Are Clear Distances.

REVISIONS	BY	MISSISSIPPI STATE HIGHWAY DEPARTMENT
		OVERPASS AT STA. 1070+61.39
		INT. BENT DETAILS
		PROJECT F-014-3(11) 11-0014-03-011-10
		FORREST COUNTY — WORKING NUMBER B6 of 14
DATE		DESIGNED WFM DETAILED WFM TRACED RT — SHEET NUMBER 484
		CHECKED JRR ISSUED DATE 12-20-78

10996-1

STATE	PROJECT NO.
MISS.	F-014-3(11)

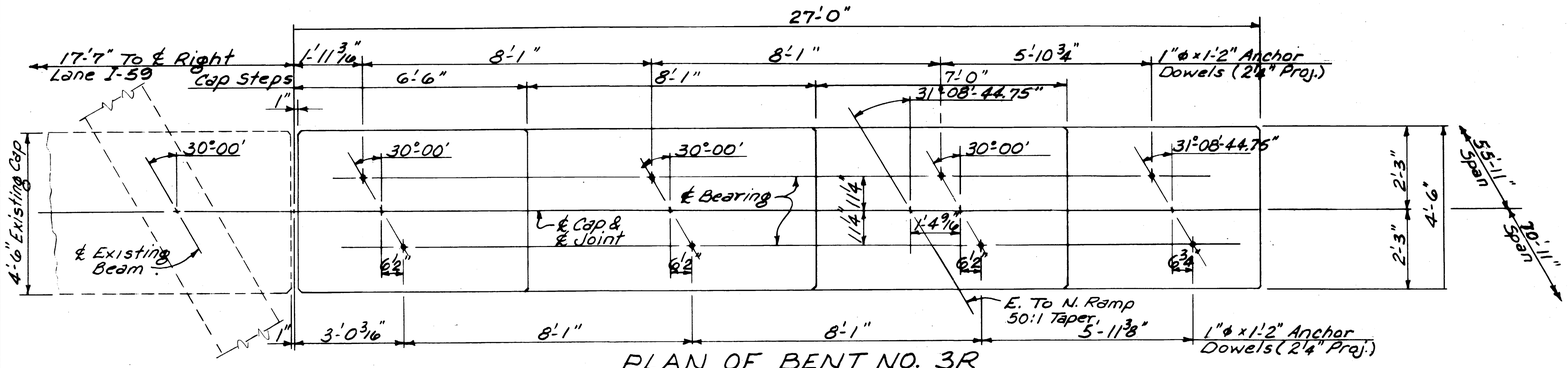

PLAN OF BENT NO. 3R

Showing Concrete Dimensions & Anchor Dowel Spacing

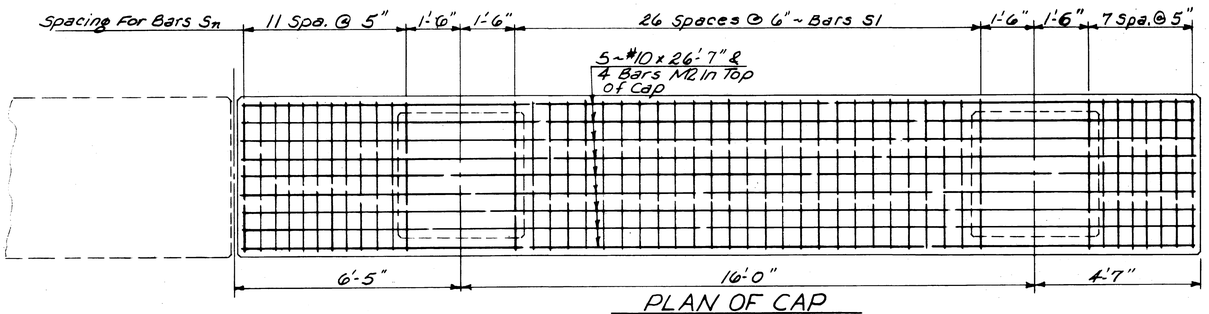

PLAN OF CAP

Showing Reinforcing Steel

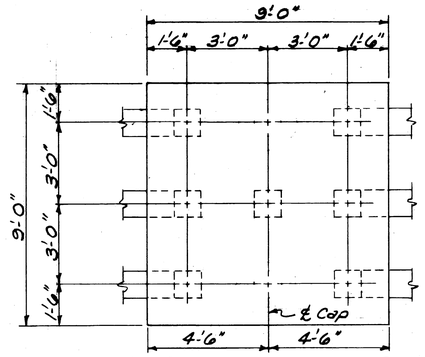

PLAN OF FOOTING

NOTE: 14"x14" Prestressed Concrete Piles Shall Be Driven To A Minimum Bearing Capacity Of 31 Tons. Batter Indicated Piles 1" Per Foot.

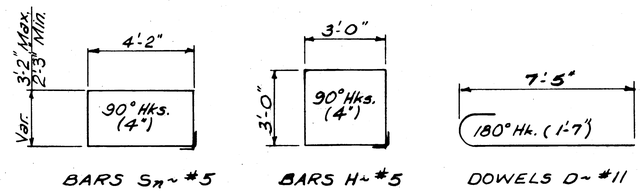

BARS Sn ~ #5 BARS H ~ #5 DOWELS D ~ #11

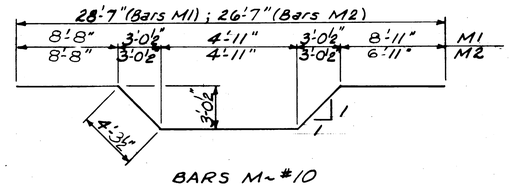

BARS M ~ #10

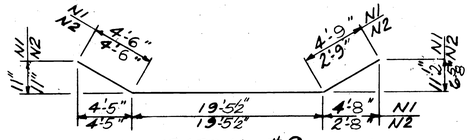

BARS Nn ~ #9

BAR BENDING DETAILS

Dimensions Are Out To Out

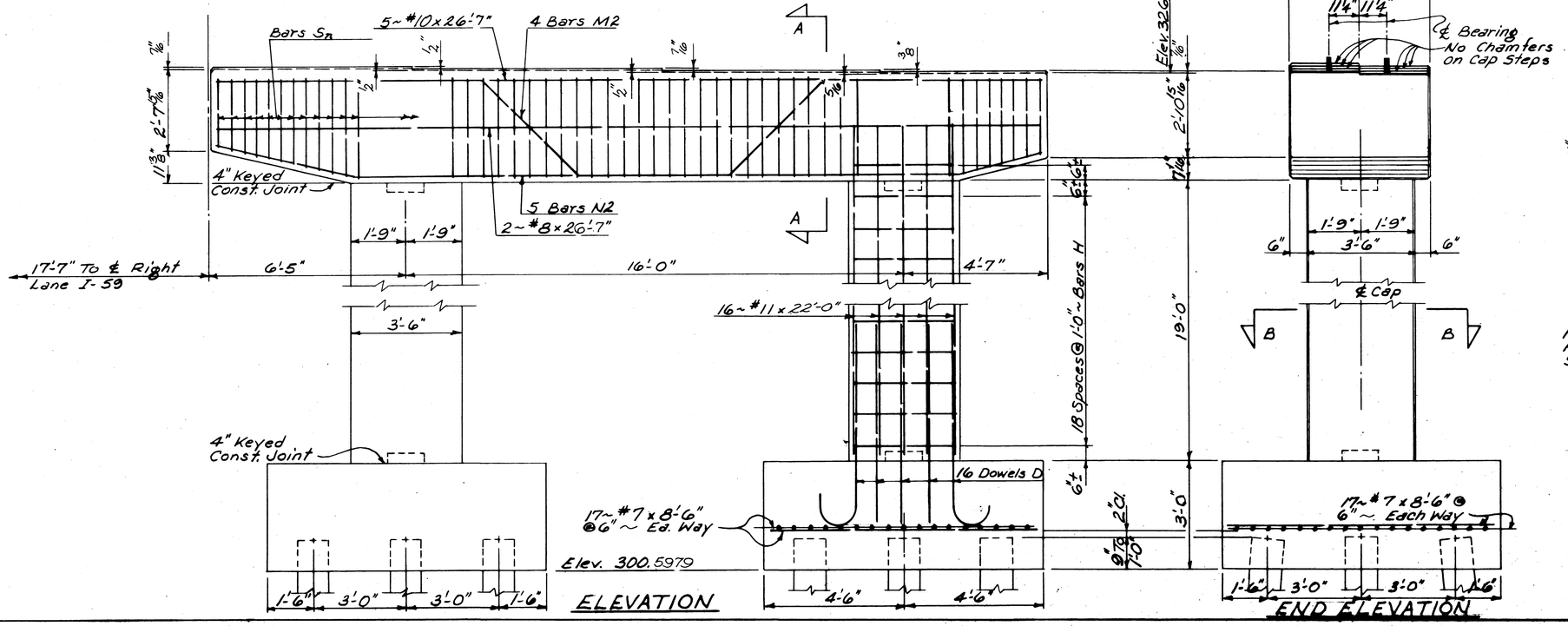

NOTE:
For GENERAL NOTES & Sections A-A & B-B See Sheet No. 86.

BY	REVISIONS	DATE

MISSISSIPPI STATE HIGHWAY DEPARTMENT

OVERPASS AT STA. 1070+61.39

INT. BENT DETAILS

PROJECT F-014-3(11) 11-0014-03-011-10

FORREST COUNTY

DESIGNED WEM DETAILED WEM TRACED RT

CHECKED JRR ISSUED DATE 12-20-78

WORKING NUMBER 87 of 14

SHEET NUMBER 485

10996-1

STATE	PROJECT NO.
MISS.	F-014-3(11)

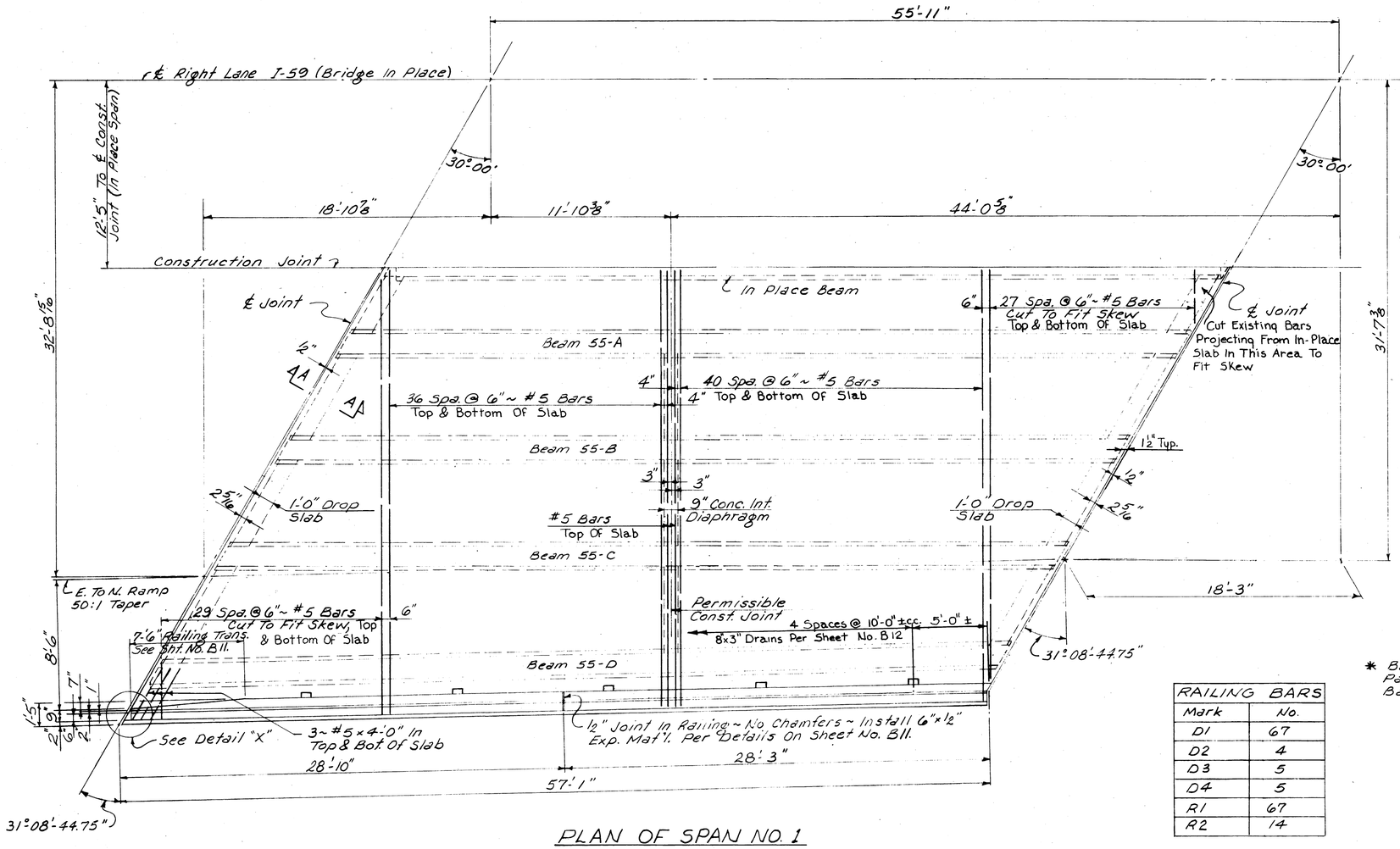

PLAN OF SPAN NO. 1

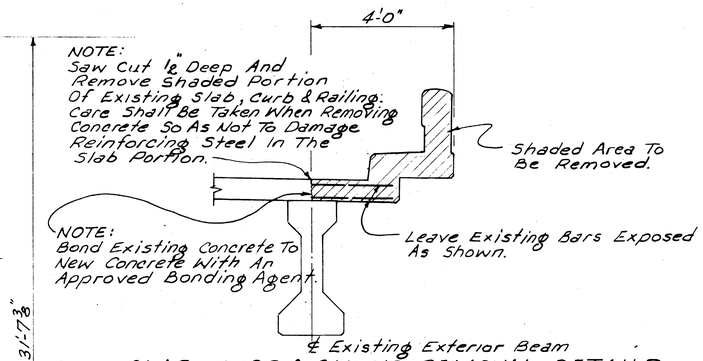

SLAB, CURB & RAILING REMOVAL DETAILS

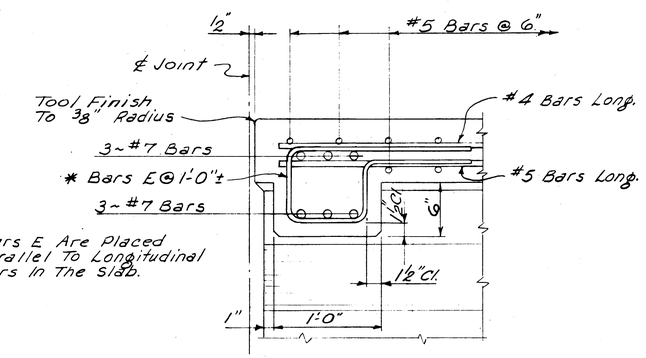

* Bars E Are Placed Parallel To Longitudinal Bars In The Slab.

SECTION A~A

RAILING BARS	
Mark	No.
D1	67
D2	4
D3	5
D4	5
R1	67
R2	14

NOTE: For GENERAL NOTES And Other Typical Span Details See Sheet No. B12.
For Bar Bending Details See Sheet No. B10.

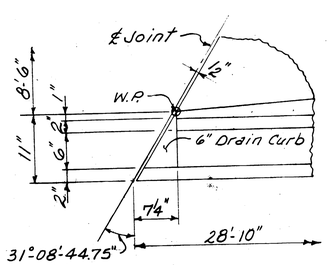

DETAIL "X"

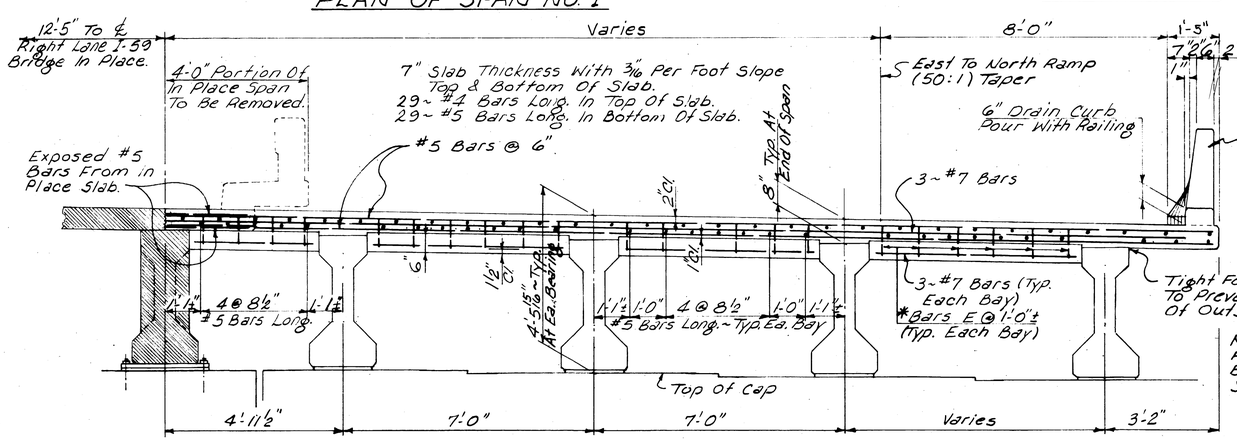

END ELEVATION

Showing Drop Slab & Slab Details For Spans 1, 2 & 3.

NOTE: For Prestressed Concrete Beam & Bearing Details see Sheets No. B13 & B14.

DESIGN DATA

Specifications: A.A.S.H.T.O., 1977
Loading: HS20-44 Mod. For 2~24K Axles
f_s = 20,000 p.s.i. ; f_c = 1,200 p.s.i. ; n = 10 (Stress); n = 30 (Deflection)

MISSISSIPPI STATE HIGHWAY DEPARTMENT

OVERPASS AT STA 1070+61.39
SPAN DETAILS

PROJECT F-014-3(11)
11-0014-03-011-10

FORREST COUNTY

WORKING NUMBER B8 of 14

SHEET NUMBER 486

DESIGNED WFM DETAILED WFM TRACED RT
CHECKED JRR ISSUED DATE 12-20-78

REVISIONS BY DATE

10996-1

STATE	PROJECT NO.
MISS.	F-014-3(11)

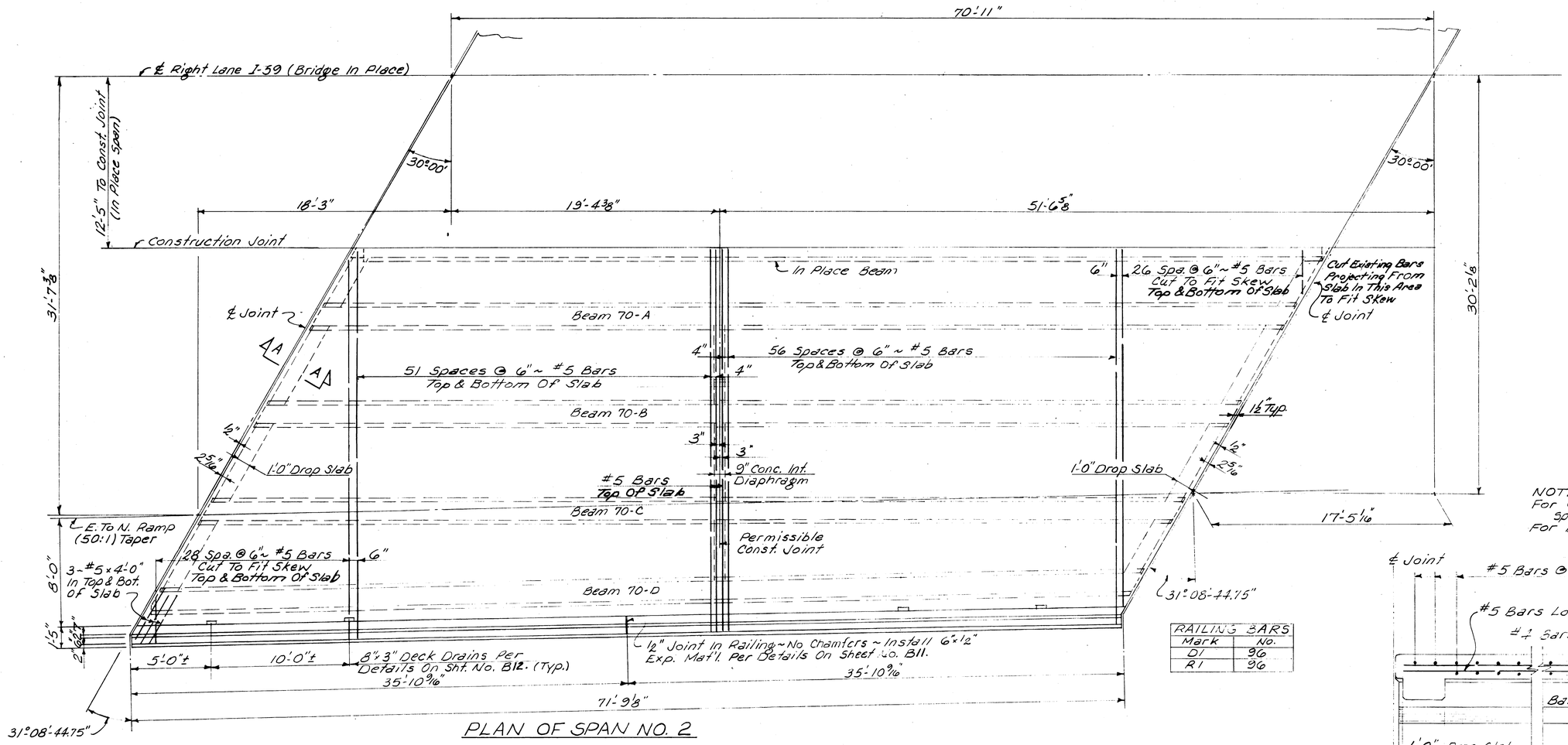

RAILING BARS	
Mark	No.
D1	96
R1	96

NOTE:
For GENERAL NOTES And Other Typical Span Details See Sheet No. B12.
For Bar Bending Details See Sheet No. B10.

PLAN OF SPAN NO. 2

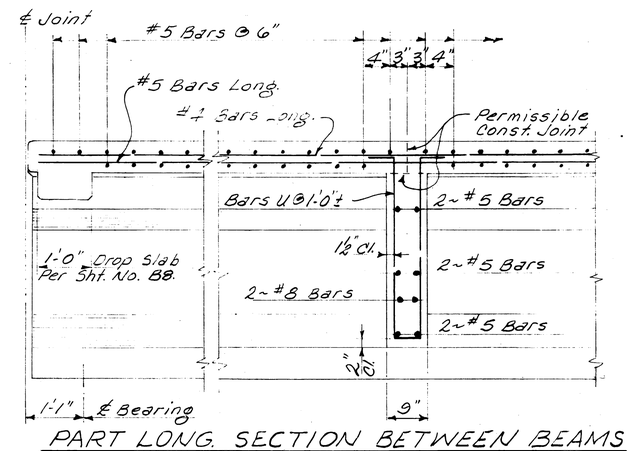

PART LONG. SECTION BETWEEN BEAMS

NOTE: #4 & #5 Bars Longitudinal In Slab May Have One 1'-2" Lap. Splice Shall Not Extend Thru Construction Joint In Slab.

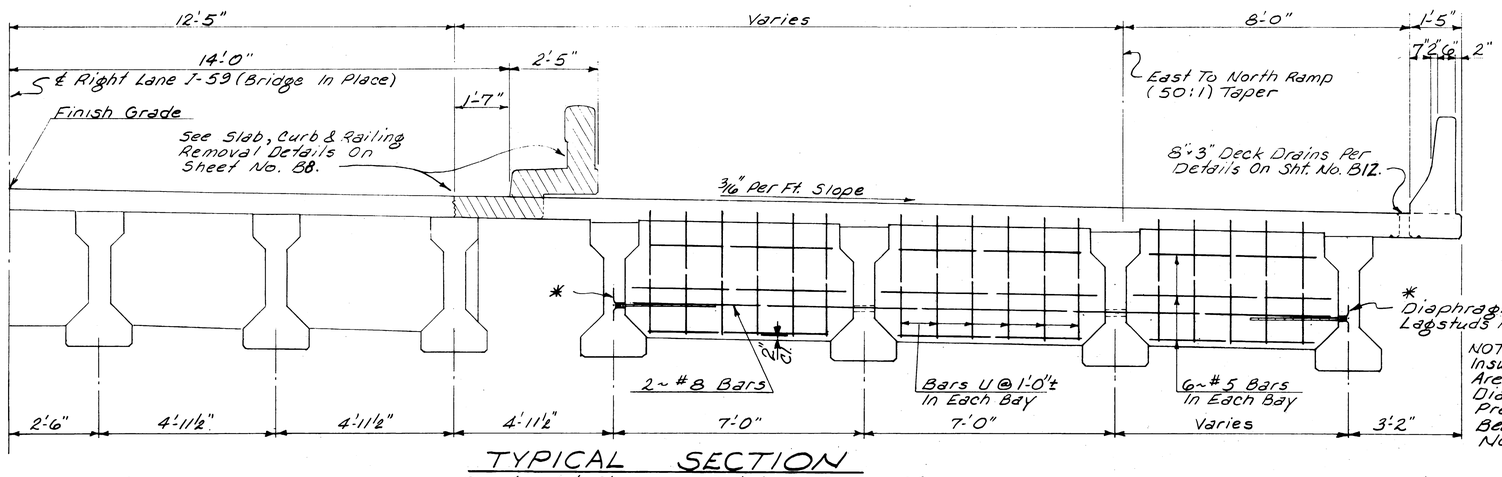

TYPICAL SECTION

Showing Int. Diaphragm Details For Spans 1, 2 & 3.

NOTE:
Insure That Holes In Beam Webs Are Completely Filled With Diaphragm Concrete. For Prestressed Concrete Beams And Bearing Details See Sheets No. B13 & B14.

MISSISSIPPI STATE HIGHWAY DEPARTMENT

OVERPASS AT STA. 1070+61.39

SPAN DETAILS

PROJECT F-014-3(11) 11-0014-03-011-10

FORREST COUNTY

REVISIONS	BY	DATE

DESIGNED WEM DETAILED WEM TRACED RT
CHECKED JRR ISSUED DATE 12-20-78

WORKING NUMBER B9 of 14

SHEET NUMBER 487

10996-1

STATE	PROJECT NO.
MISS.	F-014-3(11)

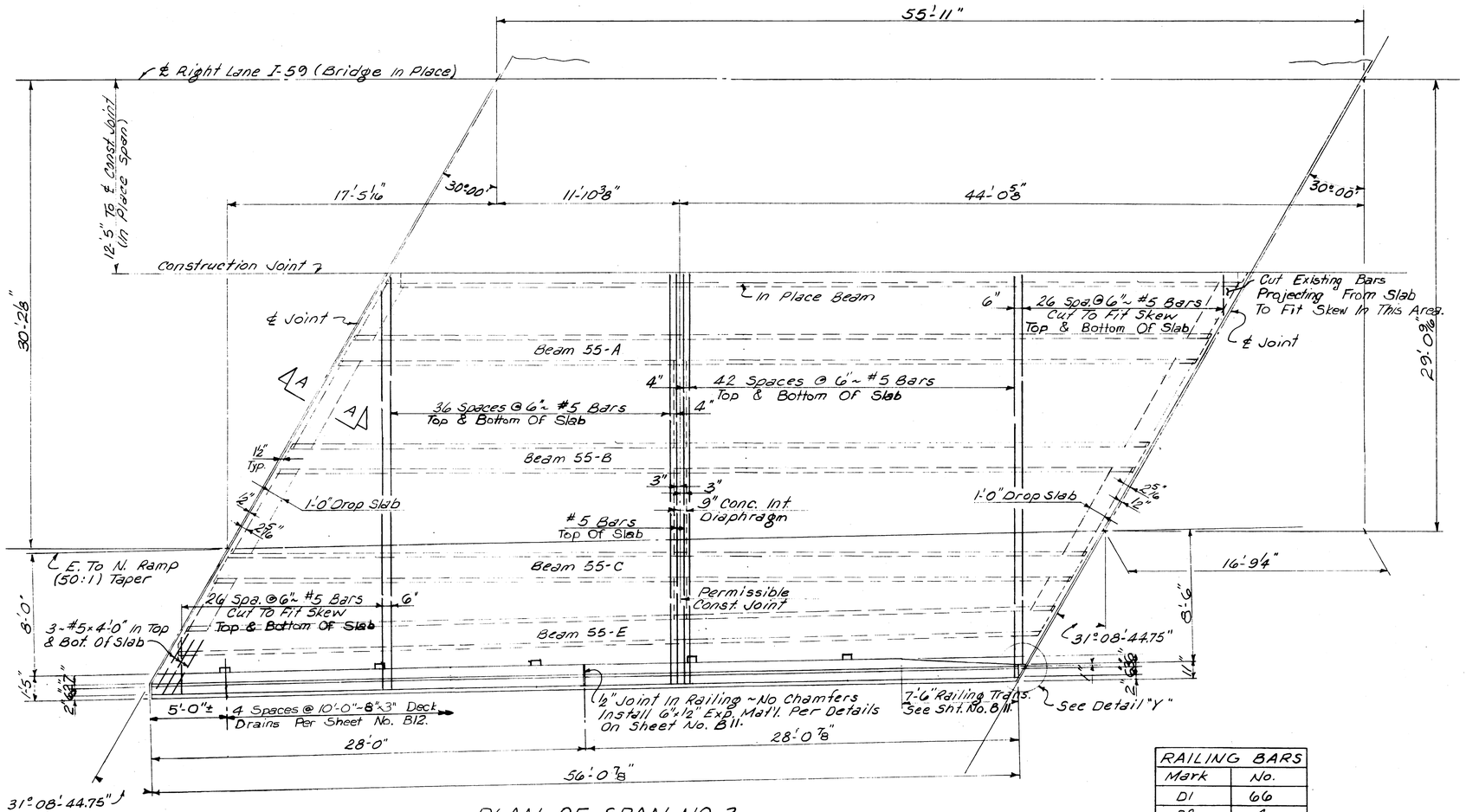

PLAN OF SPAN NO. 3

RAILING BARS	
Mark	No.
D1	66
D2	4
D3	5
D4	5
R1	66
R2	14

NOTE:
For GENERAL NOTES And Other Typical Span Details See Sheet No. B12.

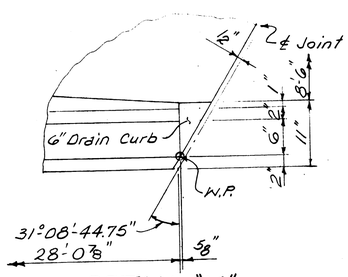

DETAIL "Y"

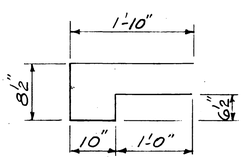

BARS E ~ #4

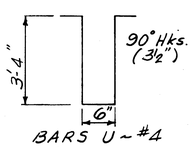

BARS U ~ #4

BAR BENDING DETAILS
Dimensions Are Out To Out

REVISIONS	BY	DATE

MISSISSIPPI STATE HIGHWAY DEPARTMENT
OVERPASS AT STA. 1070+61.39
SPAN DETAILS

PROJECT F-014-3(11)
11-0014-03-011-10

FORREST COUNTY

WORKING NUMBER B10 of 14

DESIGNED WFM DETAILED WFM TRACED RT
CHECKED JRR ISSUED DATE 12-20-78

SHEET NUMBER 488

10996-1

STATE	PROJECT NO.
MISS.	F-014-3(11)

NOTE: For Skewed Spans See Modifications On Other Span Detail Sheets.

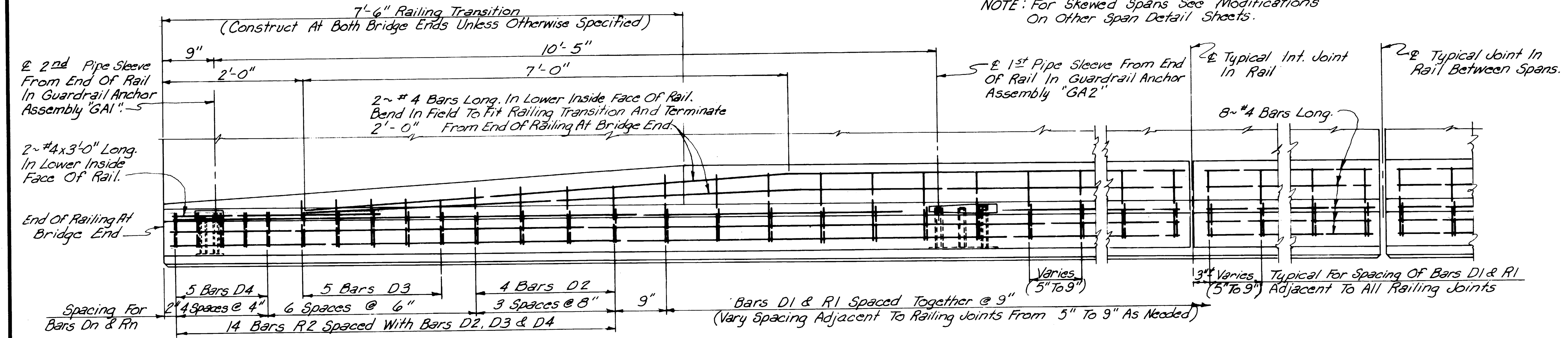

PART PLAN OF RAILING

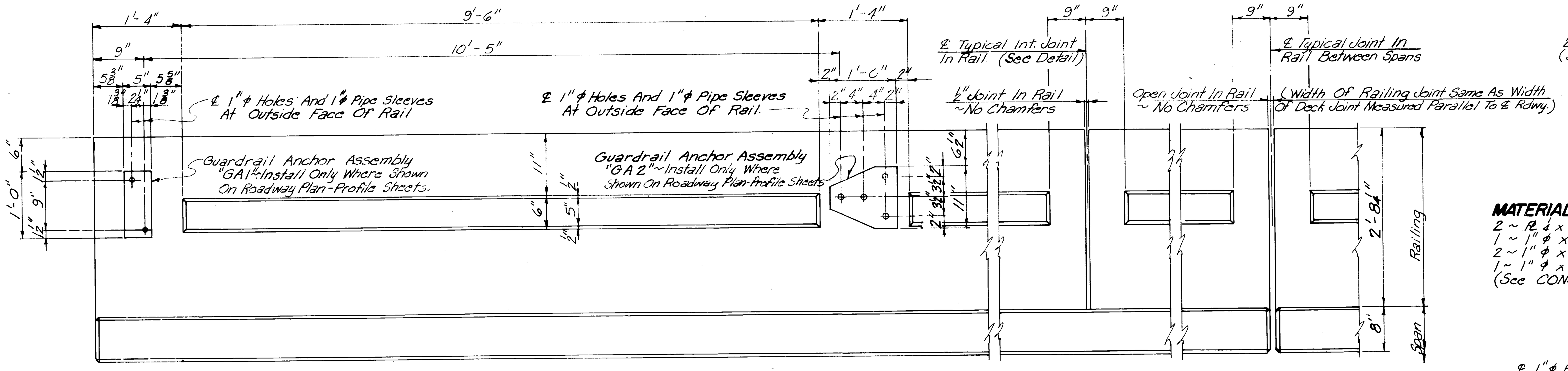

PART ELEVATION OF OUTSIDE FACE OF RAILING

NOTE: All Details Shown Are For Right Rail At Beginning And Left Rail At End Of Bridge. Opposite Side Rail Details Are Similar, Except As Noted In Assembly "GA2" Detail.

MATERIAL FOR ASSEMBLY "GA1":

2 ~ PL 1/4 x 5 x 1'-0"
1 ~ 1"φ x 0'-6 5/16" Long Std. Pipe, "S1"
1 ~ 1"φ x 0'-7 1/4" Long Std. Pipe, "S2"
(See CONSTRUCTION NOTE Below)

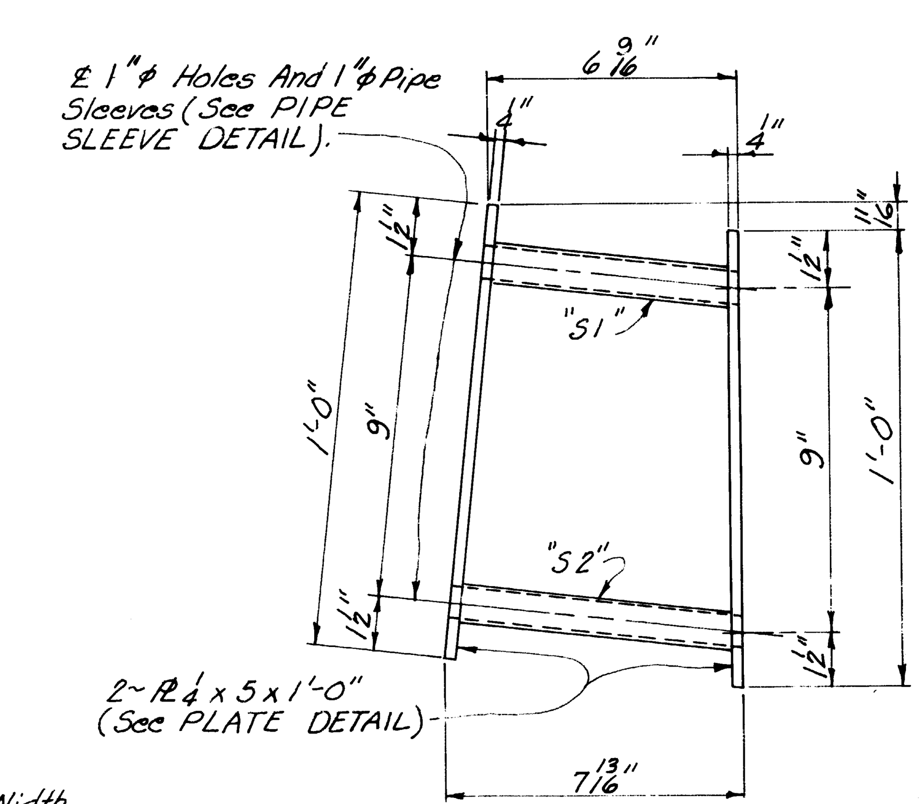

NOTE: Fabricate As Shown For Any Required Location.

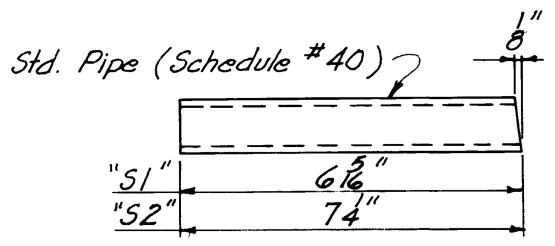

PIPE SLEEVE DETAIL

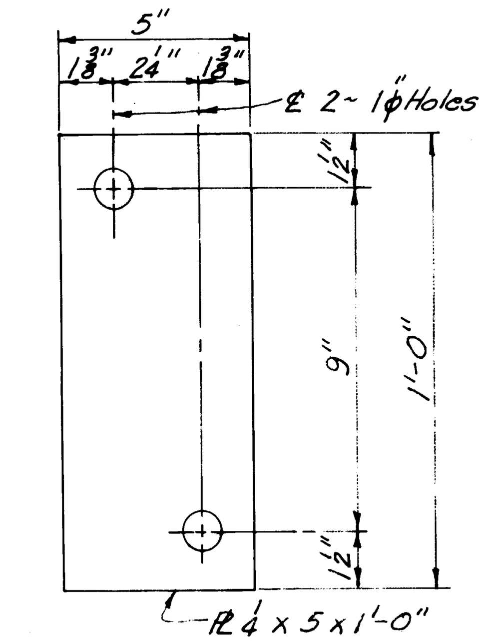

PLATE DETAIL

GUARDRAIL ANCHOR ASSEMBLY "GA1"

(Not A Pay Item)

MATERIAL FOR ASSEMBLY "GA2":

2 ~ PL 1/4 x 11 x 1'-0"
1 ~ 1"φ x 0'-6 3/8" Long Std. Pipe, "S3"
2 ~ 1"φ x 0'-6 3/4" Long Std. Pipe, "S4"
1 ~ 1"φ x 0'-7 1/8" Long Std. Pipe, "S5"
(See CONSTRUCTION NOTE Below)

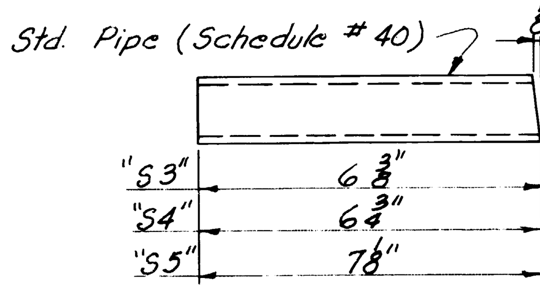

PIPE SLEEVE DETAIL

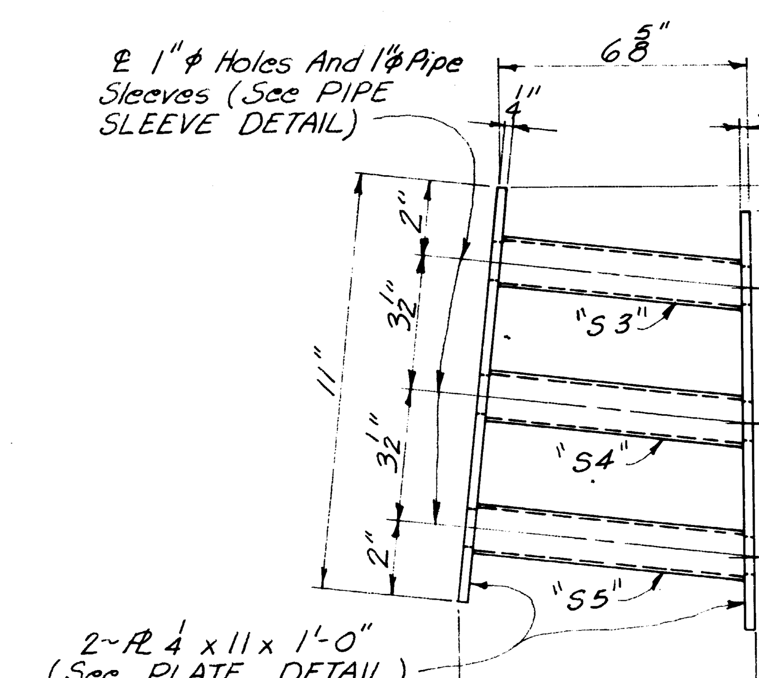

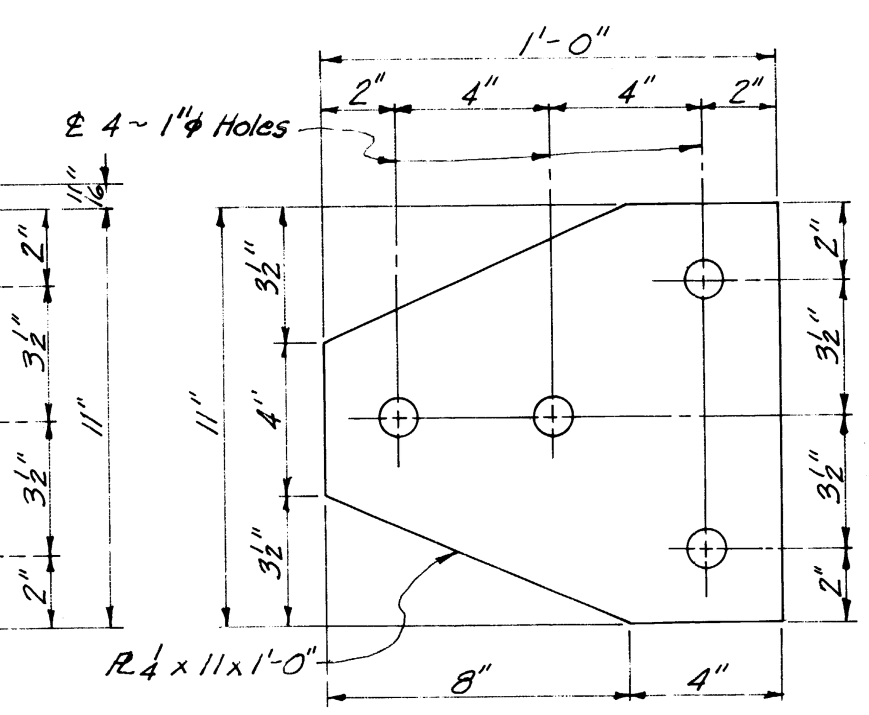

PLATE DETAIL

NOTE: For Rt. Rail At Beginning & Lt. Rail At End Of Bridge, Fabricate As Shown. For Opposing Locations, Fabricate Opposite Hand.

GUARDRAIL ANCHOR ASSEMBLY "GA2"

(Not A Pay Item)

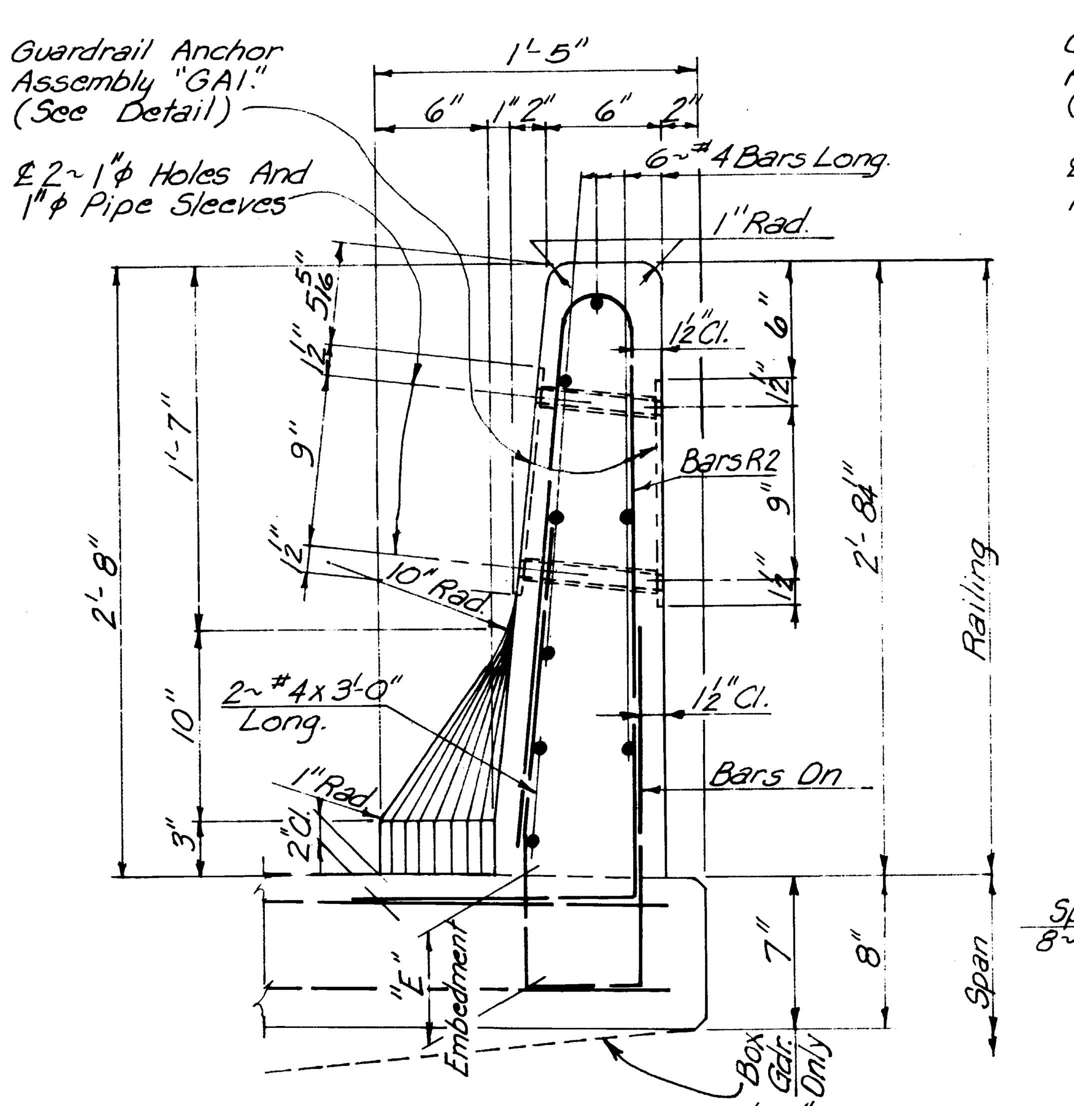

END ELEVATION OF RAILING

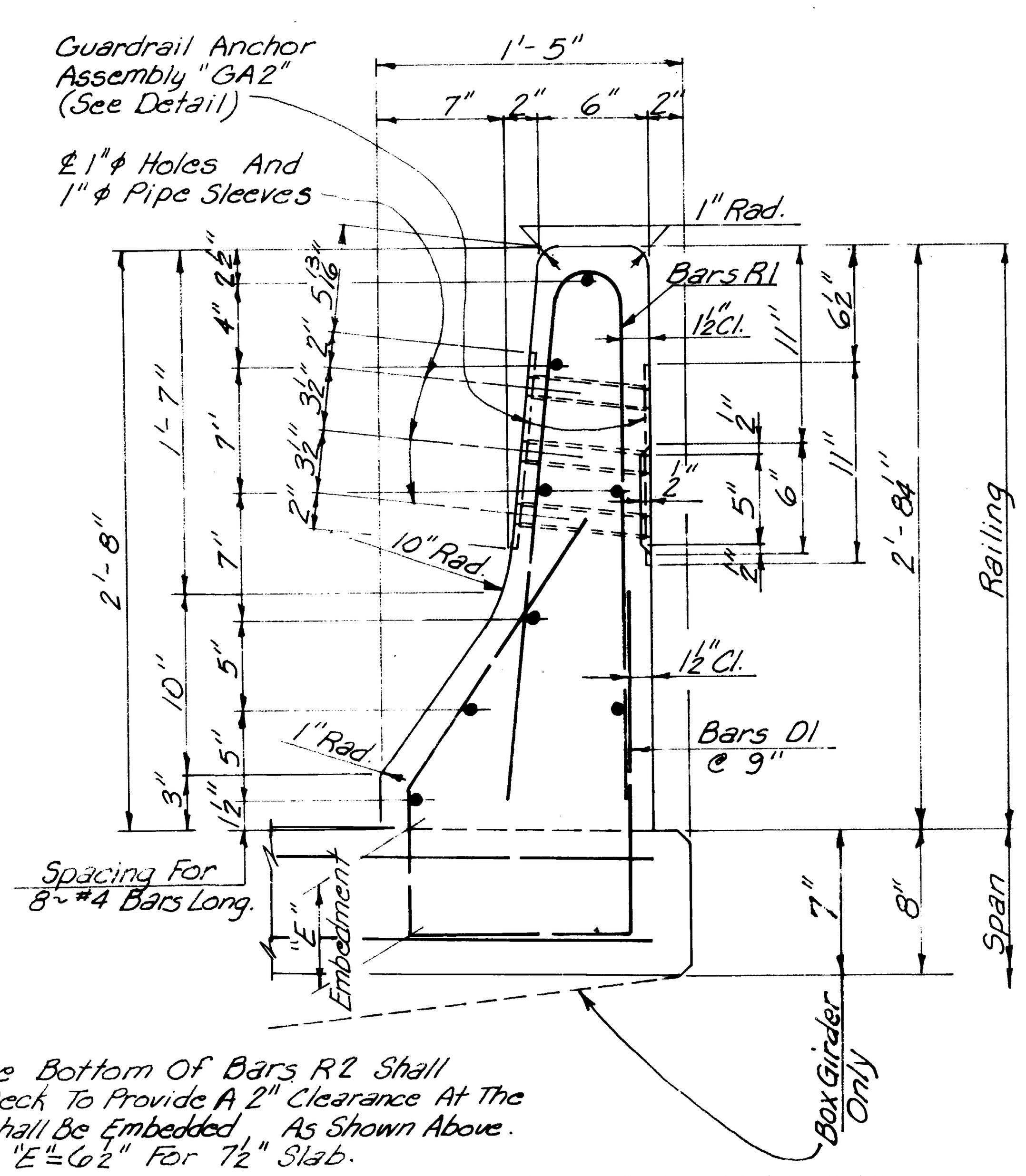

NOTE: The 1'-3" Leg At The Bottom Of Bars R2 Shall Be Embedded In The Deck To Provide A 2" Clearance At The Gutter Line. Bars Dn Shall Be Embedded As Shown Above. "E" = 6" For 7" Slab. "E" = 6 1/2" For 7 1/2" Slab.

TYPICAL SECTION OF RAILING

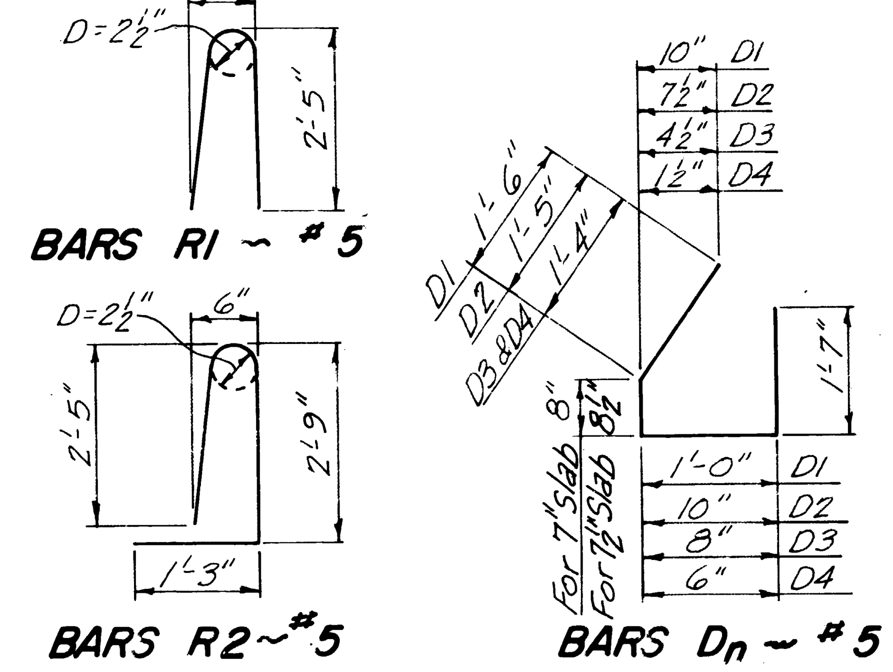

BAR BENDING DETAILS

Dimensions Are Out To Out

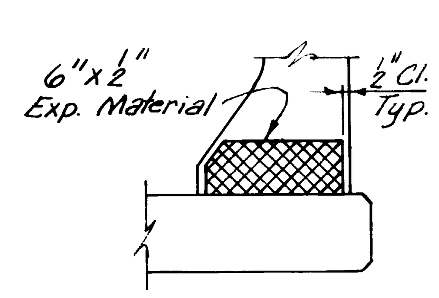

TYPICAL INT. JOINT

(For Railing Joints Located Between Span Supports And At Intermediate Supports Of Continuous Spans)

CONSTRUCTION NOTES:

Fabricate Guardrail Anchor Assemblies "GA1" And "GA2" By Tack Welding Each End Of Pipe Sleeves To Plates. Plates Shall Be A.A.S.H.T.O. M183 Steel. Pipes Shall Be A.S.T.M. A120. Galvanize Complete Assemblies After Fabrication Per A.A.S.H.T.O. M232.

Attach Assemblies Securely To Forms Prior To Pouring Railing Concrete To Assure That Exposed Surfaces Of The Assemblies Will Be Flush With Concrete Surfaces.

GUARDRAIL ANCHOR ASSEMBLIES SHALL BE INSTALLED IN BRIDGE END RAILINGS ONLY WHERE REQUIRED AS SHOWN ON ROADWAY PLAN-PROFILE SHEETS.

8-15-78
12-15-77

MISSISSIPPI STATE HIGHWAY DEPARTMENT

OVEPASS AT STA. 1070+ 61.30

RAILING DETAILS

PROJECT F-014-3(11) 11-0014-03-011-10

FORREST COUNTY

WORKING NUMBER B11 of 14

SHEET NUMBER 489

DESIGNED A.H.J. DETAILED A.H.J. TRACED H.U.B.
CHECKED J.R.R. ISSUED [illegible] DATE 12-20-78

REVISIONS | BY | DATE

10996-1

ING 44-811—

STATE	PROJECT NO.
MISS.	F-014-3(11)

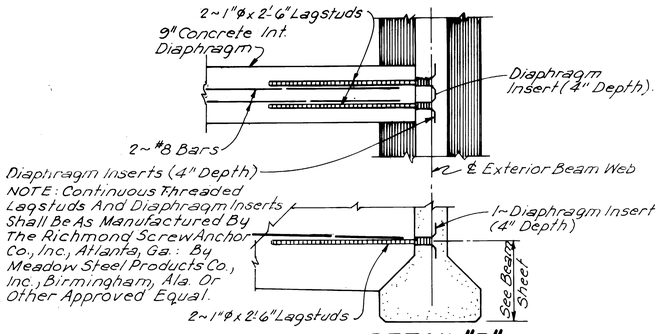

DETAIL "B"

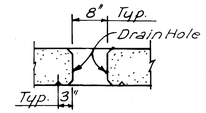

SECTION T-T

NOTE: Drain Holes Shall Be Located So That Bars B And C Will Not Be Cut. If Necessary One Bar A May Be Cut In The Field.

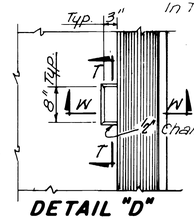

DETAIL "D"

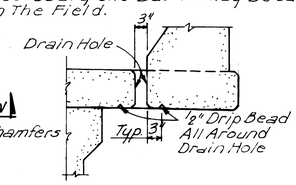

SECTION W-W

DRAIN HOLE DETAILS

Use Where Shown On The Span Detail Sheet.

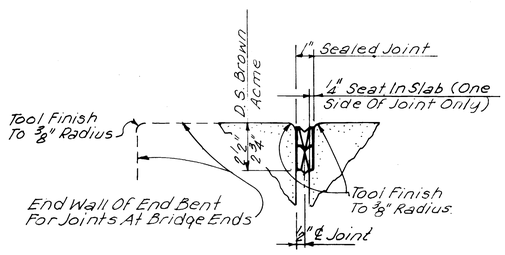

SECTION C - C

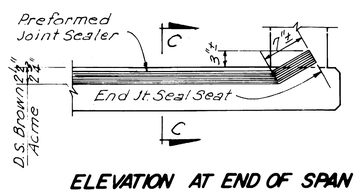

ELEVATION AT END OF SPAN

Preformed Elastic Joint Sealer Shall Be Type G-2000, As Manufactured By The D.S. Brown Co., North Baltimore, Ohio; Type AJ-200 As Manufactured By Acme Highway Products Corp., Buffalo, New York, Or Other Approved Equal, Installed According To Manufacturer's Directions.

TYPICAL JOINT SEAL

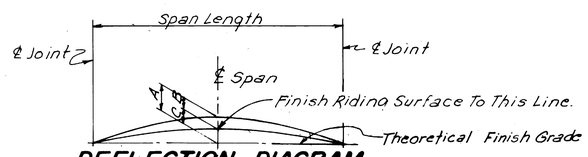

DEFLECTION DIAGRAM

A = Total Recommended Allowance For Deflection
B = Estimated Deflection Due To Dead Load Of Slab & Rail.
C = A - B = Net Initial Camber In Riding Surface, Which Includes An Allowance For Creep.

NOTE: For Values Of A, B & C, See Beam Detail Sheets.

GENERAL NOTES:

All Concrete In Span And Railing Shall Be Class "B".
Chamfer All Edges 1/2", Unless Otherwise Noted.
See Layout Sheet For Finishing Of Concrete Surfaces.
Placing Dimensions For Reinforcing Steel To Concrete Surfaces Are Clear Distances.
To Determine The Dimension From Finish Grade To Cap, The Assumption Is Made That The Compressed Thickness Of The Neoprene Pad Is 13/16", And That The Original Camber Of The Beams Will Be Within The Limits Shown On The Beam Detail Sheets. The Bridge Engineer Shall Be Notified If The Camber Is Not Within These Limits.

DATE	REVISIONS	BY

MISSISSIPPI STATE HIGHWAY DEPARTMENT

OVERPASS AT STA. 1070+61.39

MISC. SPAN DETAILS

PROJECT F-014-3(11) 11-0014-03-011-10

FORREST COUNTY

DESIGNED A.H.J. DETAILED E.W.E. TRACED E.W.E.
CHECKED J.R.R. ISSUED DATE 12-20-78

WORKING NUMBER B12 of 14

SHEET NUMBER 490

10996-1

12-15-77

BRUNING 44-811—

STATE	PROJECT NO.
MISS.	F-014-3(11)

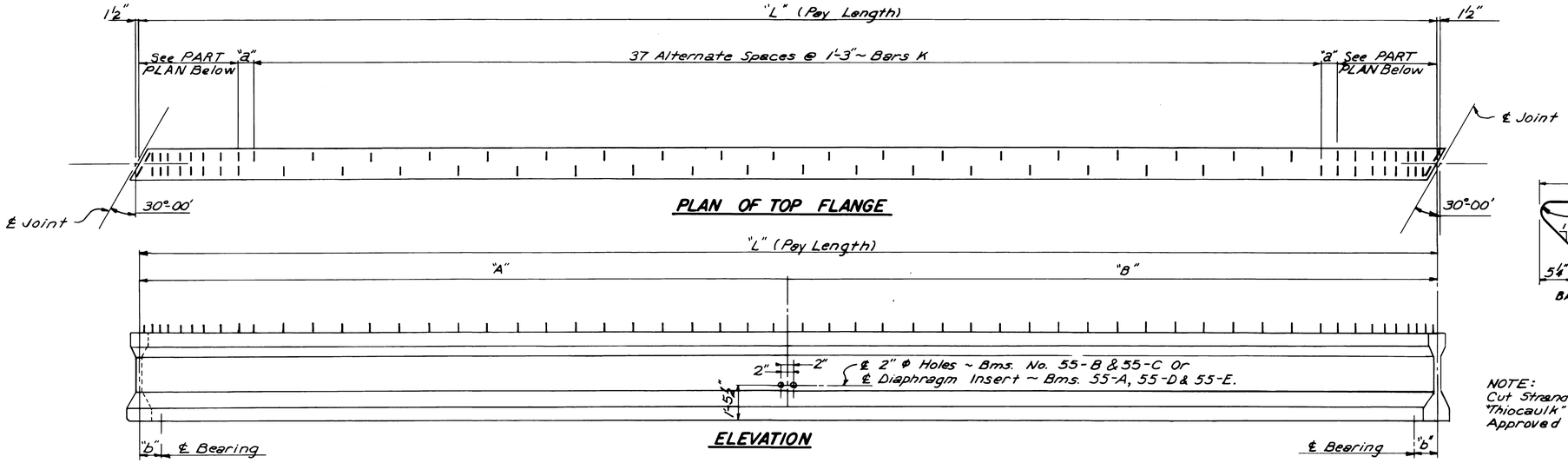

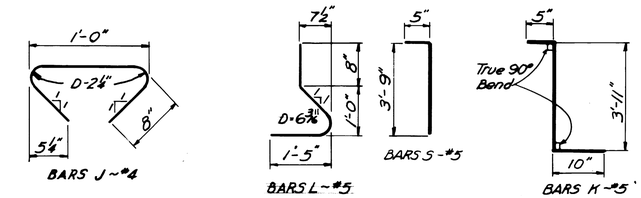

BAR BENDING DETAILS

Dimensions Are Out To Out.

NOTE:
Cut Strands Flush And Weatherproof With Limestone Colored "Thiocaulk" (Steelcote Mfg. Co.); "Horn Flex" (W.R. Grace Co.); Or An Approved Equal, Applied According To Manufacturer's Directions.

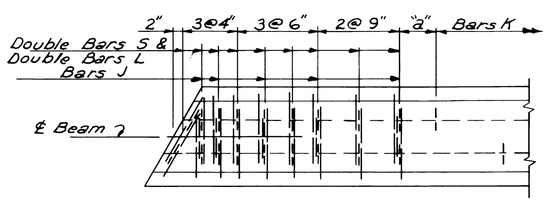

PART PLAN

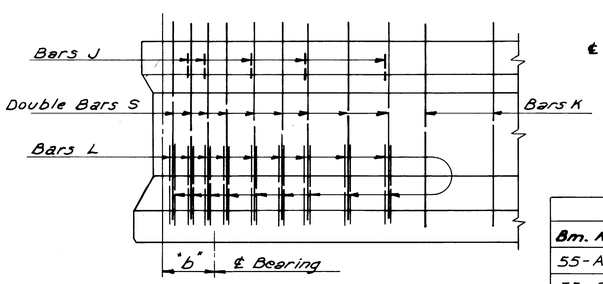

PART ELEVATION

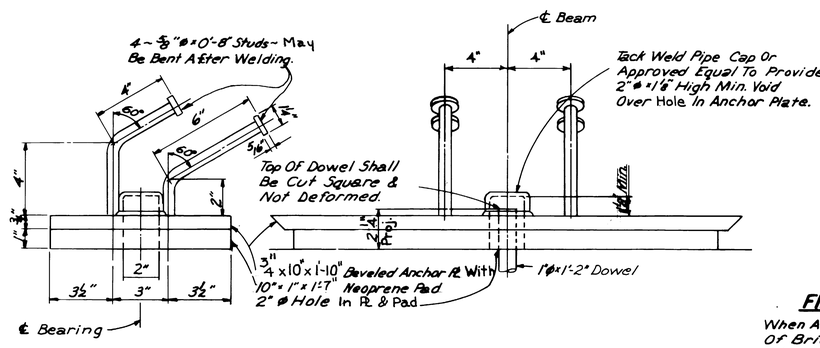

NOTE: In No Case Shall Pads Be Field Cut. Bearing Area On Top Of Cap Shall Be Cast Smooth And True To Grade.

BEARING DETAILS

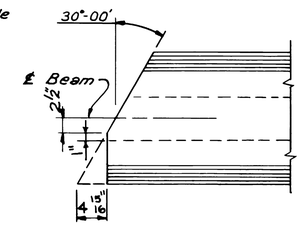

FINISH FOR EXT. BEAM ENDS

When Acute Corner Of Beam Falls On Exterior Face Of Bridge, Beam End Shall Be Fabricated As Shown. All Other Beam Ends May Be Fabricated In Like Manner At The Contractor's Option.

GENERAL NOTES:

Beams Shall Be Manufactured In Accordance With Mississippi State Highway Department Specifications, 1976.
At Transfer Of Tensioning Load The Cylinder Strength Of Concrete Shall Be As Shown In Table.
Tops Of Beams Shall Be Rough Floated. At Approximately The Time Of Initial Set, Entire Tops Of Beams Shall Be Scrubbed Transversely With A Coarse Wire Brush To Remove All Laitance And Produce A Roughened Surface For Bonding Slab. Other Surfaces Shall Be Finished Per Specifications.
The Bridge Engineer Shall Be Notified If The Camber Of This Beam Is Not Within The Limits Shown In Table.
Steel Surfaces Of The Bearing Assembly Shall Be Given One Shop Coat Of Red Lead Paint Per Code RL. After Erection Of Spans, Exposed Steel Surfaces Shall Be Given Three Field Coats Of Paint As Follows: First Coat Red Lead Per Code RL; Second And Third Coats Aluminum Per Code B.A.
Strand Pattern Detailed Hereon Is For ½"ϕ 270 K Strands. Alternate Strand Patterns As Indicated In The Table May Be Used At The Contractor's Option. Shop Drawings Of Prestressed Beams Shall Indicate The Type And Location Of All Strands.
For Beam End Bevels & Neoprene Pad Bevel See Sheet No. B14

DESIGN DATA:

Unit Stresses Are In Accordance With A.A.S.H.T.O., 1977.

DIMENSION TABLE

Bm. No.	"L"	"A"	"B"	"a"	"b"
55-A	55'-8"	21'-9¼"	33'-10¾"	6'-2"	1'-2"
55-B	55'-8"	25'-9¾"	29'-10¼"	6'-2"	1'-2"
55-C	55'-8"	29'-10¼"	25'-9¾"	6'-2"	1'-2"
55-D	56'-4"	34'-3 1/16"	22'-0 5/16"	10'-2"	1'-5⅝"
55-E	56'-4"	32'-9⅞"	23'-6⅛"	10'-2"	1'-5⅝"

ALTERNATE PRESTRESS REQUIREMENTS

* For DEFLECTION DIAGRAM See Misc. Span Details Sheet No. B12.

LR Indicates Low Relaxation Strands

Strand Type	Minimum Breaking Strength	Initial Tension	Required Number And Location Of Strands						Maximum And Minimum Centroids For Total Number Of Strands				Distance From ℄ Span To Hold-Down Point	Camber Limits	* Deflection Diagram			Minimum Concrete Strength At Time Of Strand Release
			Total	Straight Strands		Draped Strands			At ℄ Span		At Beam End							
			Number Strands	Number Strands	Centroid	Number Strands	Centroid L Span	Centroid Beam End	Max.	Min.	Max.	Min.			A	B	C	
	Lbs/Strand	Lbs/Strand																
½"ϕ270K	41,300	28,910	16	16	10.00"	—	—	—	11.00"	9.00"	11.00"	9.00"	—	0" To 1"	⅜"	3/16"	3/16"	4,200 psi.
7/16"ϕ250K	27,000	18,900	24	24	10.42"	—	—	—	11.21"	9.42"	11.42"	9.42"	—	0" To 1"	⅜"	3/16"	3/16"	4,200 psi.
½"ϕ270KLR	41,300	30,980	16	16	10.00"	—	—	—	11.00"	9.00"	11.00"	9.14"	—	0" To 1"	5/16"	3/16"	⅛"	4,200 psi.

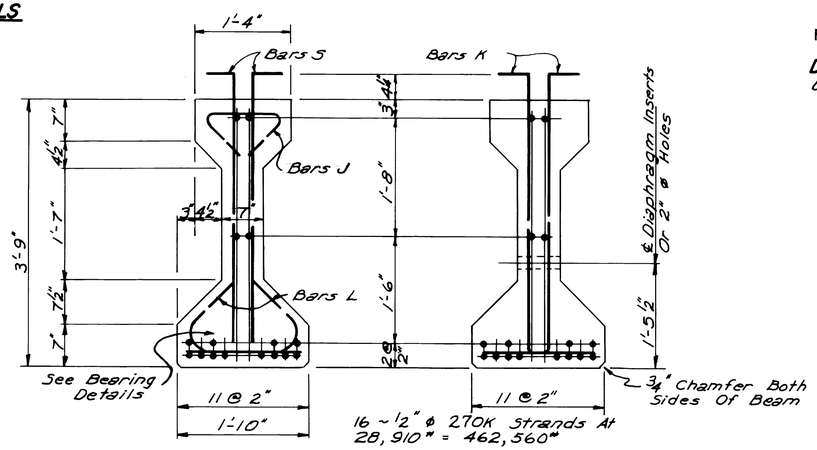

END ELEVATION

SECTION NEAR ℄ SPAN

REVISIONS	BY

MISSISSIPPI STATE HIGHWAY DEPARTMENT
OVEPASS AT STA. 1070+61.39
55' BEAM DETAILS
PROJECT F-014-3(11)
11-0014-03-011-10
FORREST COUNTY

DATE | DESIGNED WFM | DETAILED WFM | TRACED D.N.M.
CHECKED JRR | ISSUED | DATE 12-20-78

WORKING NUMBER B13 of 14
SHEET NUMBER 491

10996-1

STATE	PROJECT NO.
MISS.	F-014-3(11)

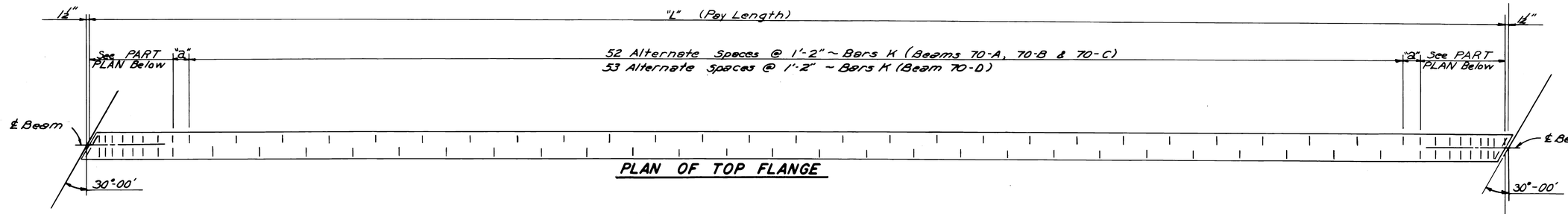

PLAN OF TOP FLANGE

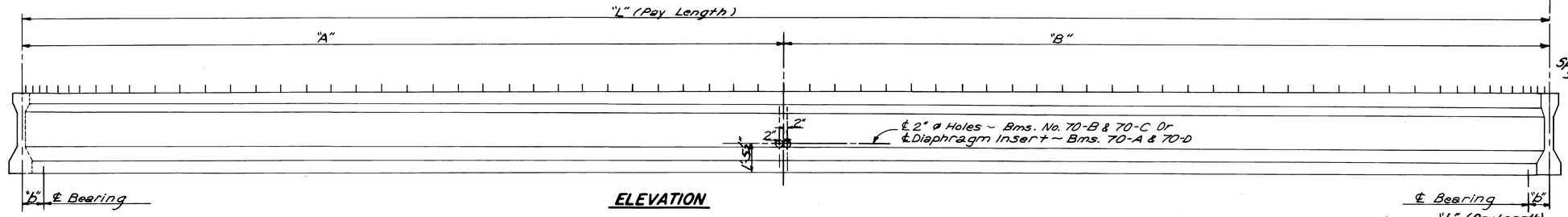

ELEVATION

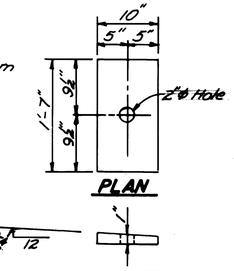

PLAN

END ELEVATION
NEOPRENE PAD DETAILS

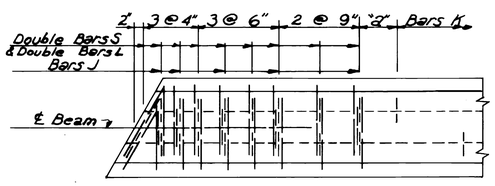

PART PLAN

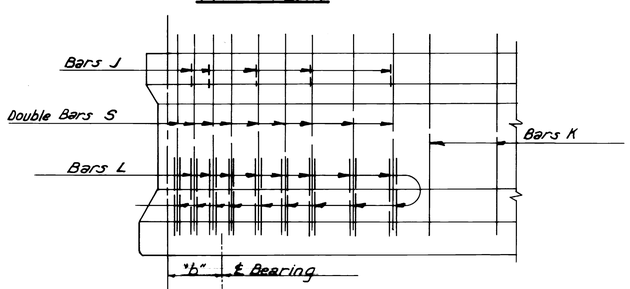

PART ELEVATION

DIMENSION TABLE					
Bm. No.	"L"	"A"	"B"	"a"	"b"
70-A	70'-8"	29'-3¼"	41'-4¾"	10"	11½"
70-B	70'-8"	33'-3¾"	37'-4¼"	10"	11½"
70-C	70'-8"	37'-4¼"	33'-3¾"	10"	11½"
70-D	71'-6⅛"	41'-1⅞"	30'-4⅝"	8⅙"	11⅝"

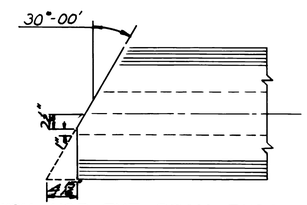

FINISH FOR EXT. BEAM ENDS

When Acute Corner Of Beam Falls On Exterior Face Of Bridge, Beam End Shall Be Fabricated As Shown. All Other Beam May Be Fabricated In Like Manner At The Contractor's Option.

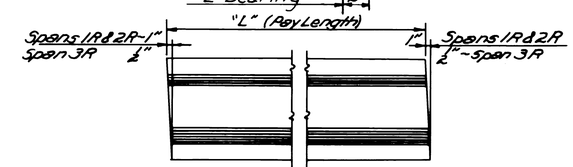

BEAM END BEVEL DETAILS

NOTE:
Cut Strands Flush And Weatherproof With Limestone Colored "Thiocaulk" (Steelcote Mfg. Co.); "Hornflex" (W.R. Grace Co.), Or An Approved Equal, Applied According To Manufacturers Directions.

NOTE:
For GENERAL NOTES, Bar Bending Details, And Bearing Details, See Sheet No. B13.

DESIGN DATA:
Unit Stresses Are In Accordance With A.A.S.H.T.O., 1977.

ALTERNATE PRESTRESS REQUIREMENTS

LR Indicates Low Relaxation Strands

*For DEFLECTION DIAGRAM, See Misc. Span Details Sheet No. B12

Strand Type	Minimum Breaking Strength	Initial Tension	Required Number And Location Of Strands						Maximum And Minimum Centroids For Total Number Of Strands				Distance From C Span To Hold Down Point	Camber Limits	*Deflection Diagram			Minimum Concrete Strength At Time Of Strand Release
			Total Number Strands	Straight Strands Number Strands	Straight Strands Centroid	Draped Strands Number Strands	Draped Strands Centroid L Span	Draped Strands Centroid Beam End	At C Span Max.	At C Span Min.	At Beam End Max.	At Beam End Min.			A	B	C	
	Lbs/Strand	Lbs/Strand																
½"ø 270K	41,300	28,910	26	26	10.46"	—	—	—	10.89	9.46	11.46	9.79	—	0" to 1¼"	⅞"	½"	⅜"	4,200 psi.
7/16"ø 250K	27,000	18,900	40	40	10.25"	—	—	—	10.79	9.25	11.25	9.79	—	0" to 1¼"	⅞"	½"	⅜"	4,200 psi.
½"ø 270KLR	41,300	30,980	22	22	10.27"	—	—	—	10.89	9.27	11.27	9.68	—	0" to 1¼"	⅞"	½"	⅜"	4,200 psi.

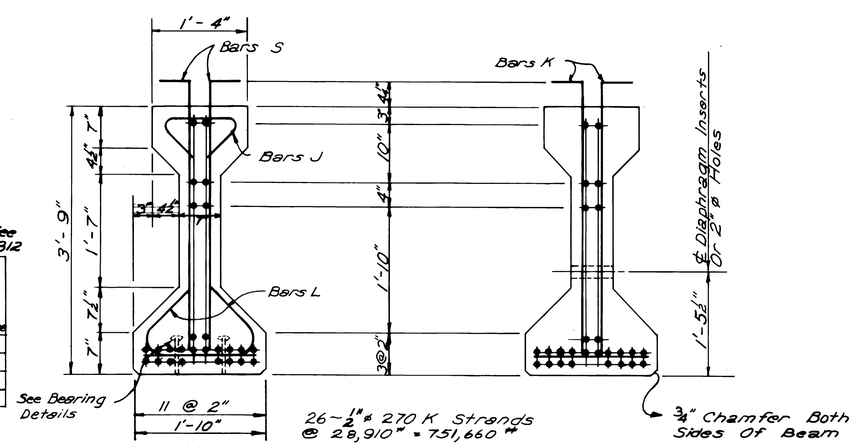

END ELEVATION

SECTION NEAR ℄ SPAN

REVISIONS	BY	DATE

MISSISSIPPI STATE HIGHWAY DEPARTMENT

OVERPASS AT STA. 1070+61.39

70' BEAM DETAILS

PROJECT F-014-3(11)
11-0014-03-011-10

FORREST COUNTY

DESIGNED WFM DETAILED D.N.M. TRACED D.N.M.
CHECKED J.R.R. ISSUED DATE 12-20-78

WORKING NUMBER B14 of 14

SHEET NUMBER 492

10996-1