Exhibit 4
Erosion Control Plans

STATE	PROJECT NO.
MISS.	

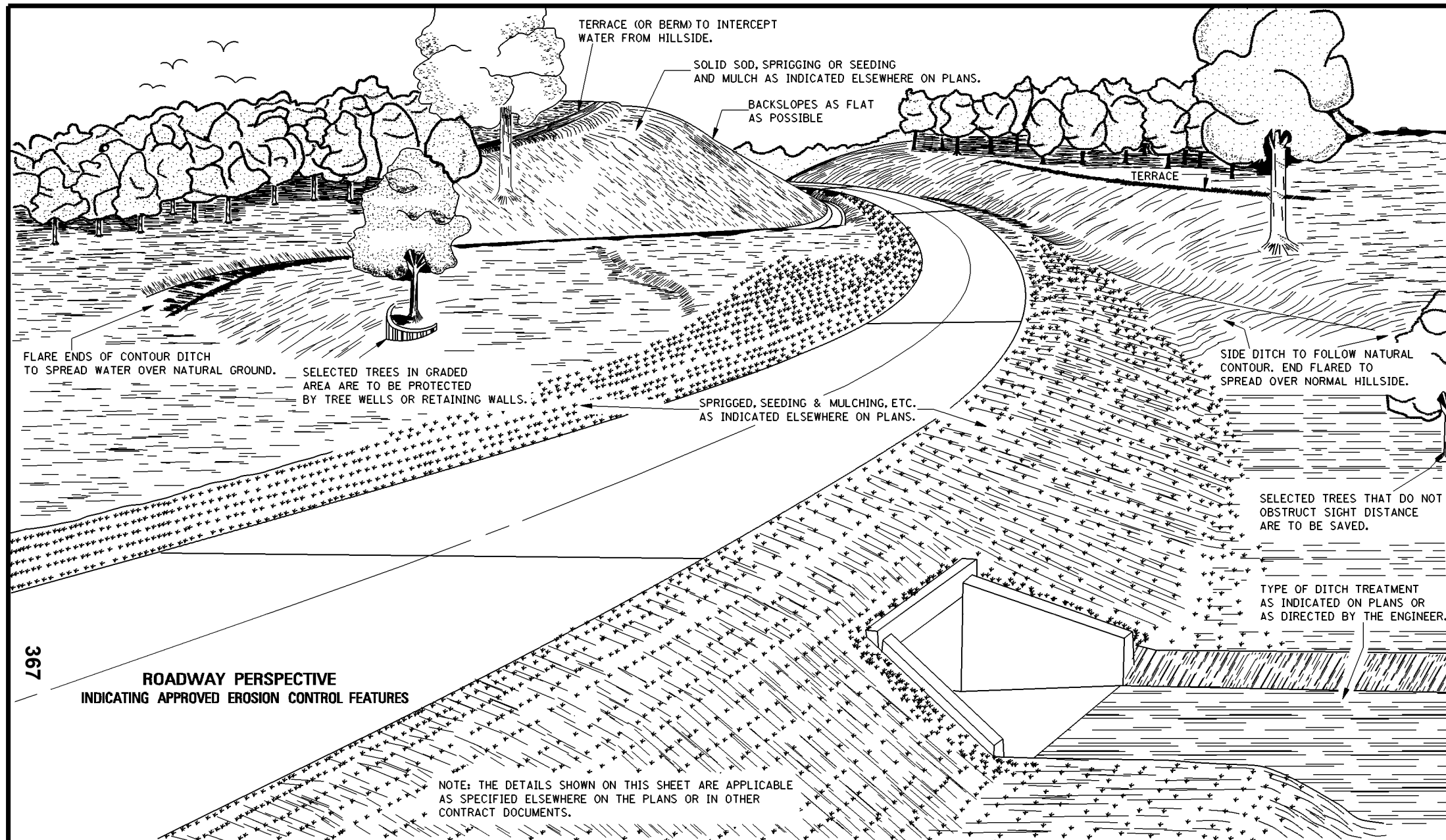

ROADWAY PERSPECTIVE
INDICATING APPROVED EROSION CONTROL FEATURES

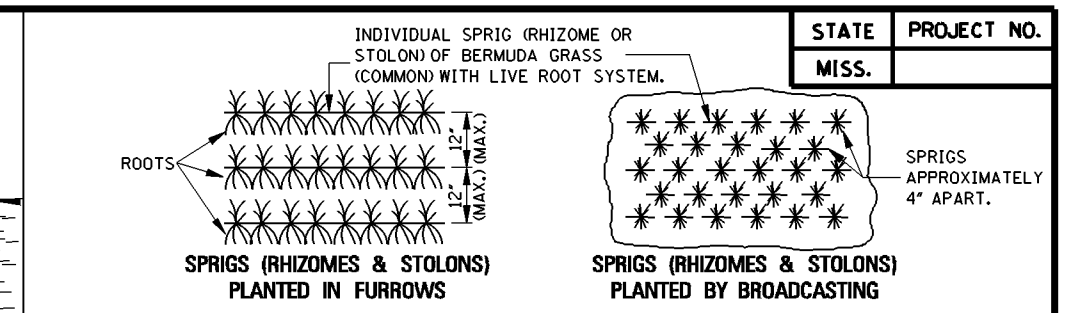

SPRIGS (RHIZOMES & STOLONS) PLANTED IN FURROWS

SPRIGS (RHIZOMES & STOLONS) PLANTED BY BROADCASTING

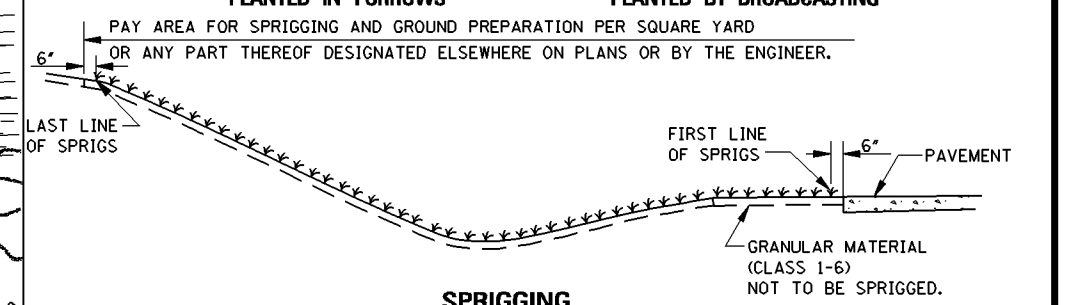

SPRIGGING

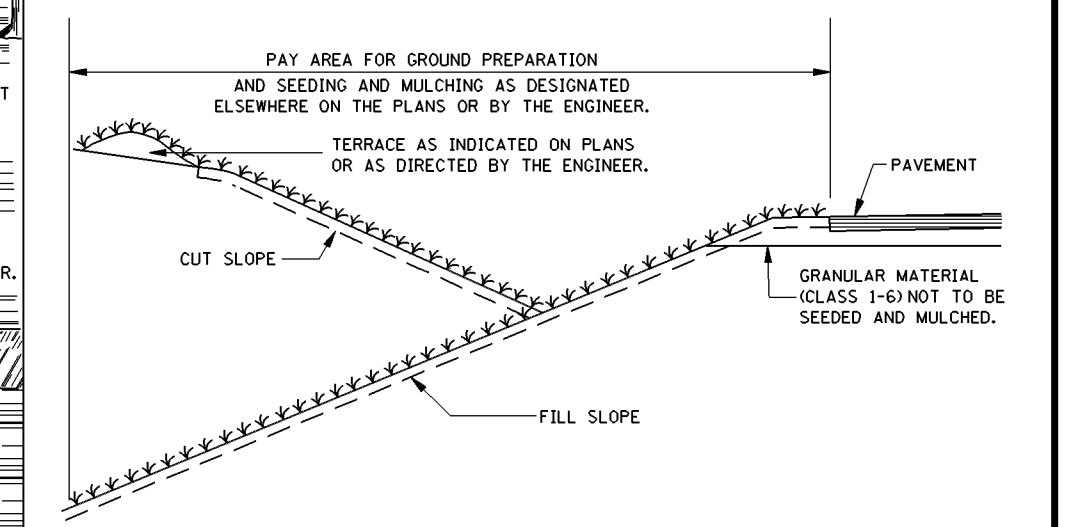

SEEDING AND MULCHING

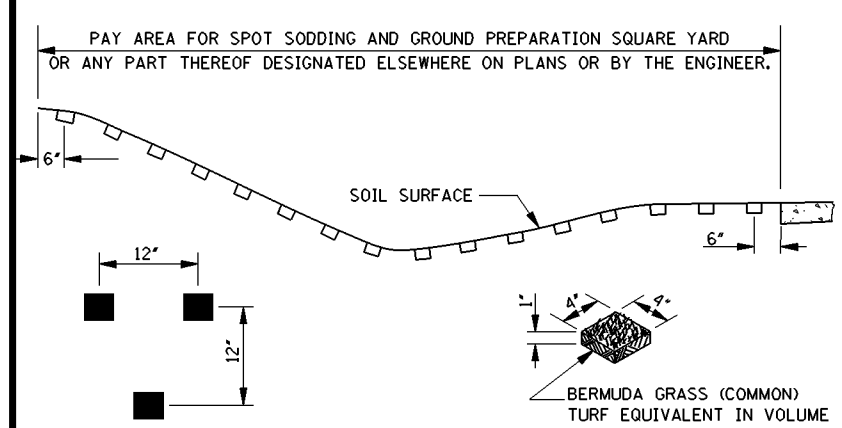

ARRANGEMENT OF SOD TURFS

SPOT SODDING

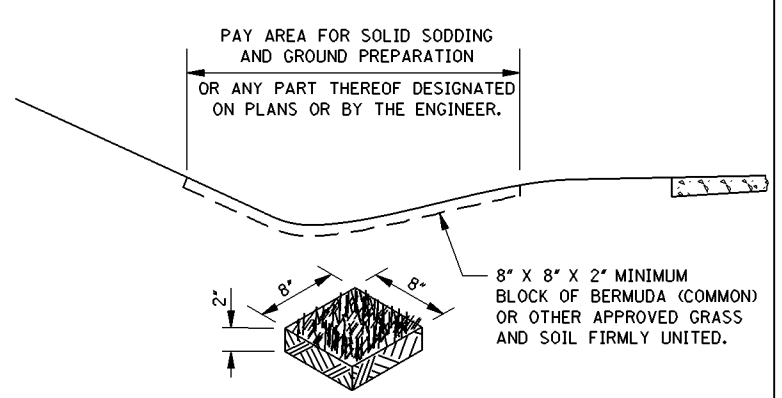

SOLID SODDING

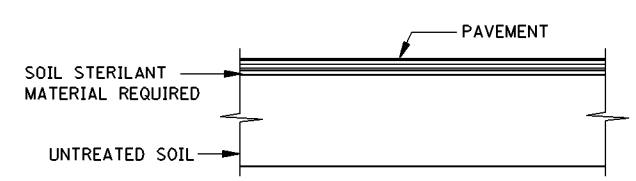

SOIL STERILIZATION UNDER PAVED AREAS
(ISLANDS, MEDIANS OR SLOPE PAVEMENT)

GENERAL NOTE:

1. LONGITUDINAL AND TRANSVERSE MEASUREMENTS FOR THE PAY AREA SHALL BE TAKEN ALONG THE SLOPES.

DATE	REVISION	BY

MISSISSIPPI DEPARTMENT OF TRANSPORTATION
ROADWAY DESIGN DIVISION
STANDARD PLAN

EROSION CONTROL

ENGLISH

WORKING NUMBER EC-1

ISSUE DATE: OCTOBER 1, 1998

SHEET NUMBER 140

STATE	PROJECT NO.
MISS.	

NOTES:

1. "J-HOOK" CONFIGURATION SILT FENCE APPLICATIONS ARE TO BE USED IN CONJUNCTION WITH PERIMETER SILT FENCE WHEN STORMWATER RUNOFF IS IN TWO DIRECTIONS (DOWN A FILL SLOPE AND DOWN GRADIENT ALONG THE RIGHT-OF-WAY).
2. "SMILE CONFIGURATION" APPLICATIONS ARE TO BE USED AS PERIMETER SILT FENCE WHEN THERE IS ONE-DIRECTIONAL FLOW DOWN A SLOPE.
3. SAND BAGS CAN BE USED AS DIVERSION BERMS TO PREVENT SEDIMENT FROM BEING WASHED ONTO OR ACROSS HARD SURFACES, OR TO HELP SLOW SHEET FLOW VELOCITY WHEN DRAINING AWAY FROM HARD SURFACES.
4. FOR SHORTER SLOPES AND/OR SLOPES THAT ARE LESS STEEP, DIVERSION BERMS CAN BE USED TO SAFELY CONVEY STORMWATER AWAY FROM OR AROUND A DENUDED AREA. THEY CAN BE CONSTRUCTED USING A MANUFACTURED SILT DIKE OR BY CONSTRUCTING A TEMPORARY EARTH BERM AND TRENCH WITH GEOTEXTILE OR POLYETHYLENE SHEETING PROTECTION.
5. TEMPORARY DEWATERING STRUCTURES CAN BE USED DURING CULVERT CONSTRUCTION, STREAM DIVERSIONS, OR OTHER CONSTRUCTION ACTIVITIES WHERE TURBID WATERS NEED TO BE CLARIFIED BEFORE RELEASE.
6. THE ABUTMENT SLOPE TOE BERM SHALL BE 3 FEET TALL. THE BERM MAY BE CONSTRUCTED WITH ROCK IN ACCORDANCE WITH REQUIREMENTS FOR ROCK DITCH CHECKS ON ECD-8 OR WITH SOIL IN ACCORDANCE WITH TEC-2 IF BERM IS USED. IT MUST BE GRASSED

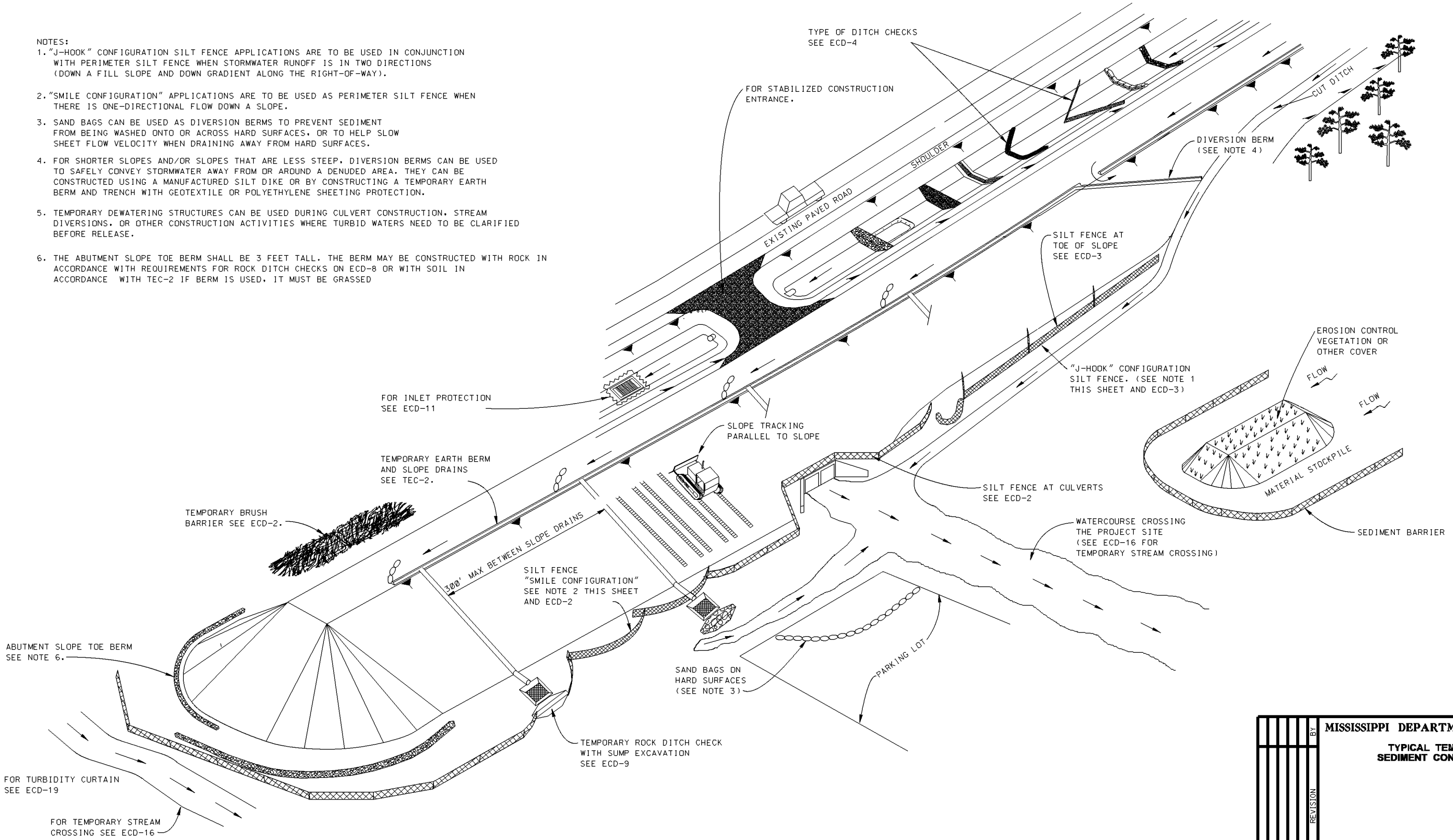

DATE	REVISION	BY

MISSISSIPPI DEPARTMENT OF TRANSPORTATION

TYPICAL TEMPORARY EROSION/ SEDIMENT CONTROL APPLICATIONS

WORKING NUMBER
ECD-1
SHEET NUMBER

FILENAME: EROSION CONTROL\ECD-1.DGN
DESIGN TEAM_____ CHECKED_____ DATE_____

PLAN
ROADWAY DESIGN DIVISION
MISSISSIPPI DEPARTMENT OF TRANSPORTATION

368

1/19/2010 12:18PM ECD-1.DGN

STATE	PROJECT NO.
MISS.	

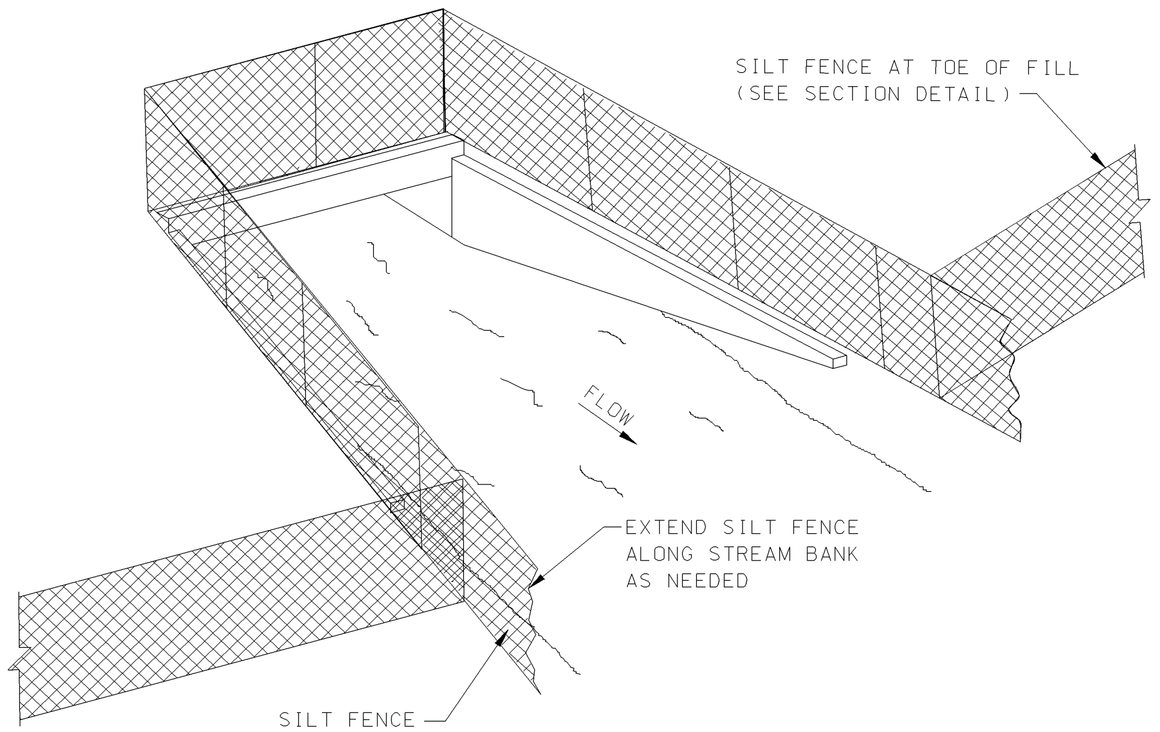

SEDIMENT BARRIER AT CROSS DRAIN

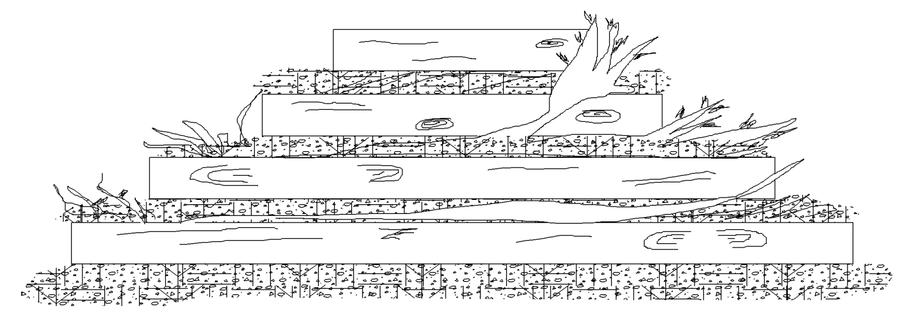

FRONT ELEVATION

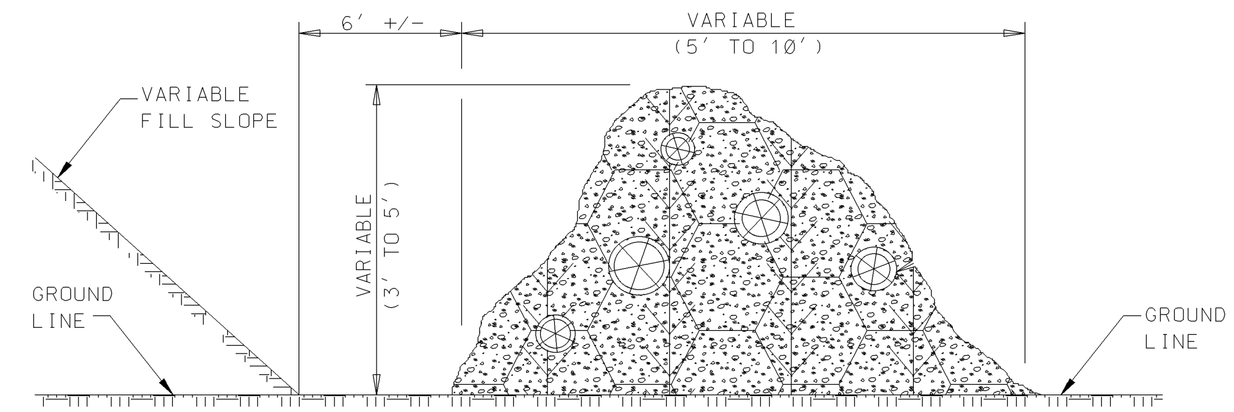

SIDE ELEVATION

TEMPORARY BRUSH BARRIER

NOTES:
1. BRUSH BARRIER MAY BE USED WHERE NATURAL GROUND IS LEVEL OR SLOPING AWAY FROM PROJECT.
2. PLACE BRUSH, LOG AND TREE LAPS APPROXIMATELY PARALLEL TO TOE OF FILL SLOPE WITH SOME OF THE HEAVIER MATERIALS BEING PLACED ON TOP TO PROPERLY SECURE THE BARRIER AS DETAILED AT LOCATIONS SHOWN ON PLANS OR AS DIRECTED OR PERMITTED BY THE ENGINEER.
3. TO ALLOW WATER TO SEEP THROUGH BRUSH BARRIER, INTERMINGLE THE BRUSH, LOG AND TREE LAPS SO AS NOT TO FORM A SOLID DAM.
4. THE BRUSH BARRIER MAY BE CHOKED WITH FILTER FABRIC.
5. TEMPORARY BRUSH BARRIER WILL NOT BE MEASURED FOR SEPERATE PAYMENT

NOTE:
1. ANCHOR AND INSTALL SILT FENCE PER DETAILS SHOWN ON ECD-3

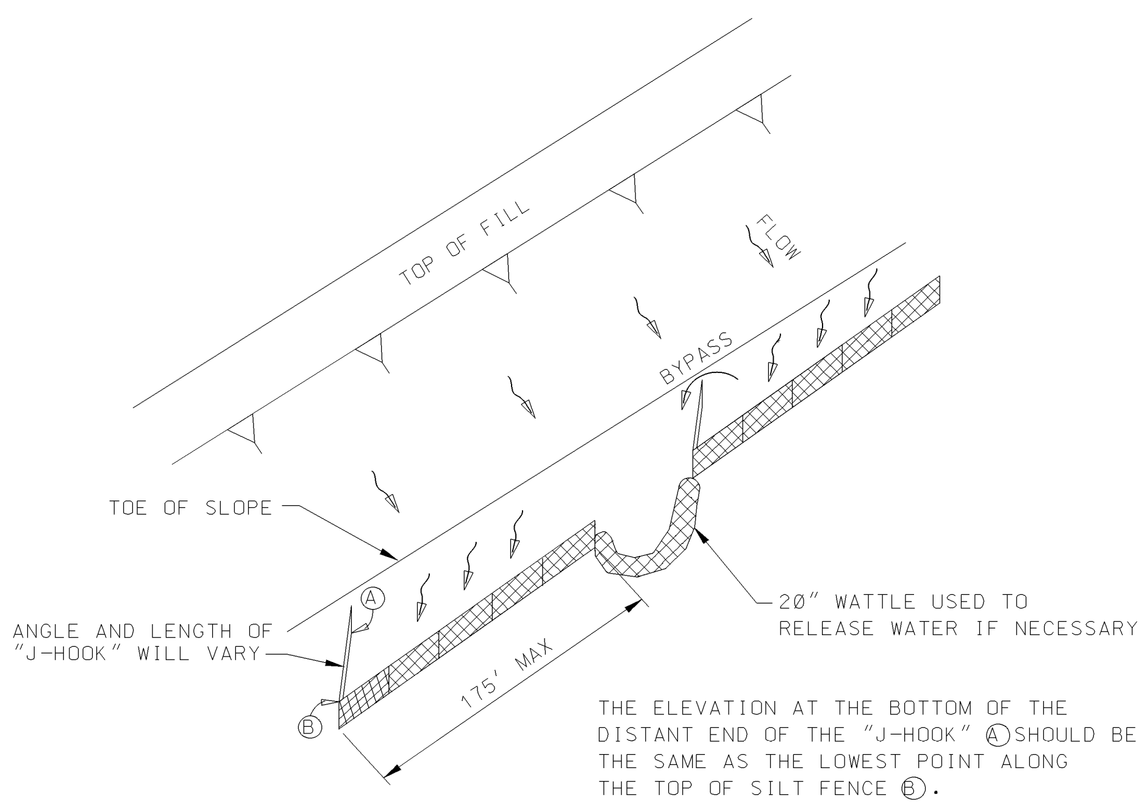

"J-HOOK" SILT FENCE APPLICATION

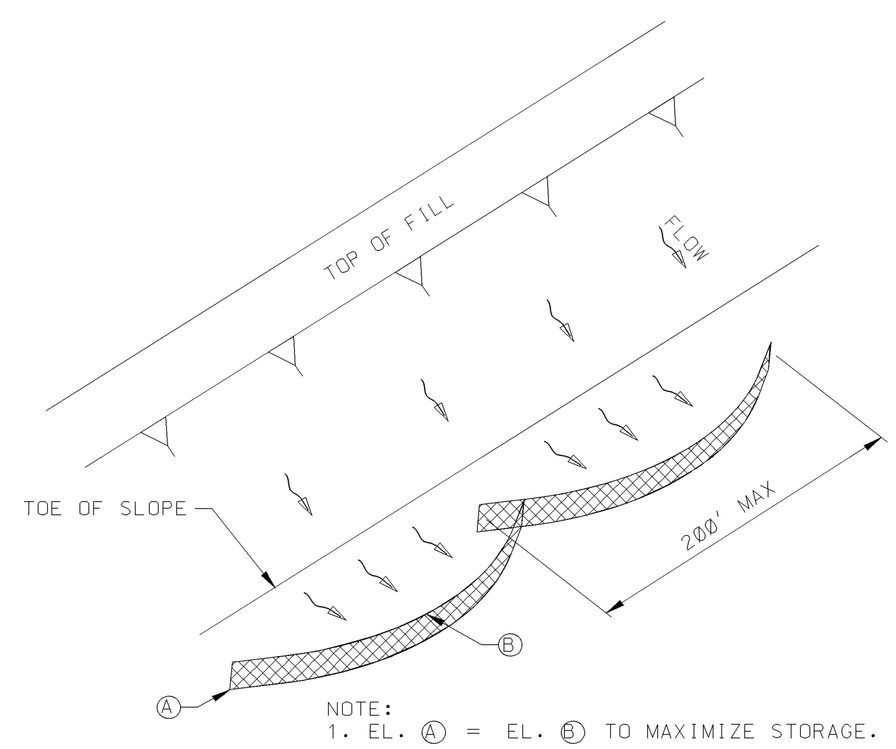

NOTE:
1. EL. (A) = EL. (B) TO MAXIMIZE STORAGE.

"SMILE-CONFIGURATION" SILT FENCE APPLICATION

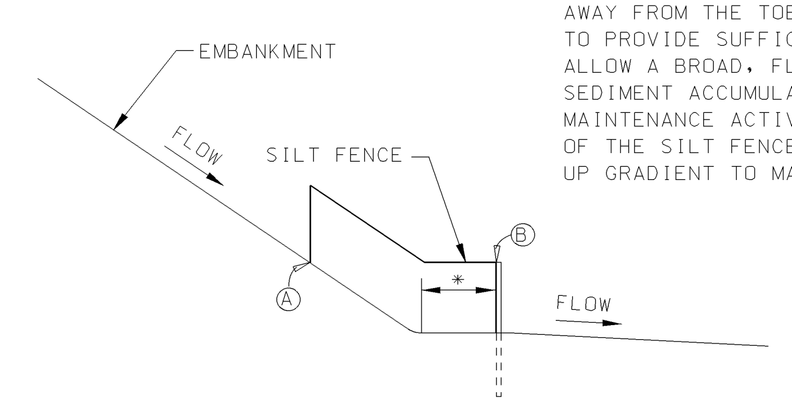

* SILT FENCE SHOULD BE LOCATED AWAY FROM THE TOE OF THE SLOPE TO PROVIDE SUFFICIENT SPACE TO ALLOW A BROAD, FLAT AREA FOR SEDIMENT ACCUMULATION AND MAINTENANCE ACTIVITIES. THE ENDS OF THE SILT FENCE SHOULD BE TURNED UP GRADIENT TO MAXIMIZE STORAGE.

SILT FENCE SECTION AT TOE OF FILL

REVISION	BY	DATE

MISSISSIPPI DEPARTMENT OF TRANSPORTATION

DETAILS OF SEDIMENT BARRIER APPLICATIONS

WORKING NUMBER
ECD-2
SHEET NUMBER

FILENAME: EROSION CONTROL\ECD-2.DGN
DESIGN TEAM ____ CHECKED ____ DATE ____

ROADWAY DESIGN DIVISION
MISSISSIPPI DEPARTMENT OF TRANSPORTATION
1/28/2010 8:54 AM ECD-2.DGN

STATE	PROJECT NO.
MISS.	

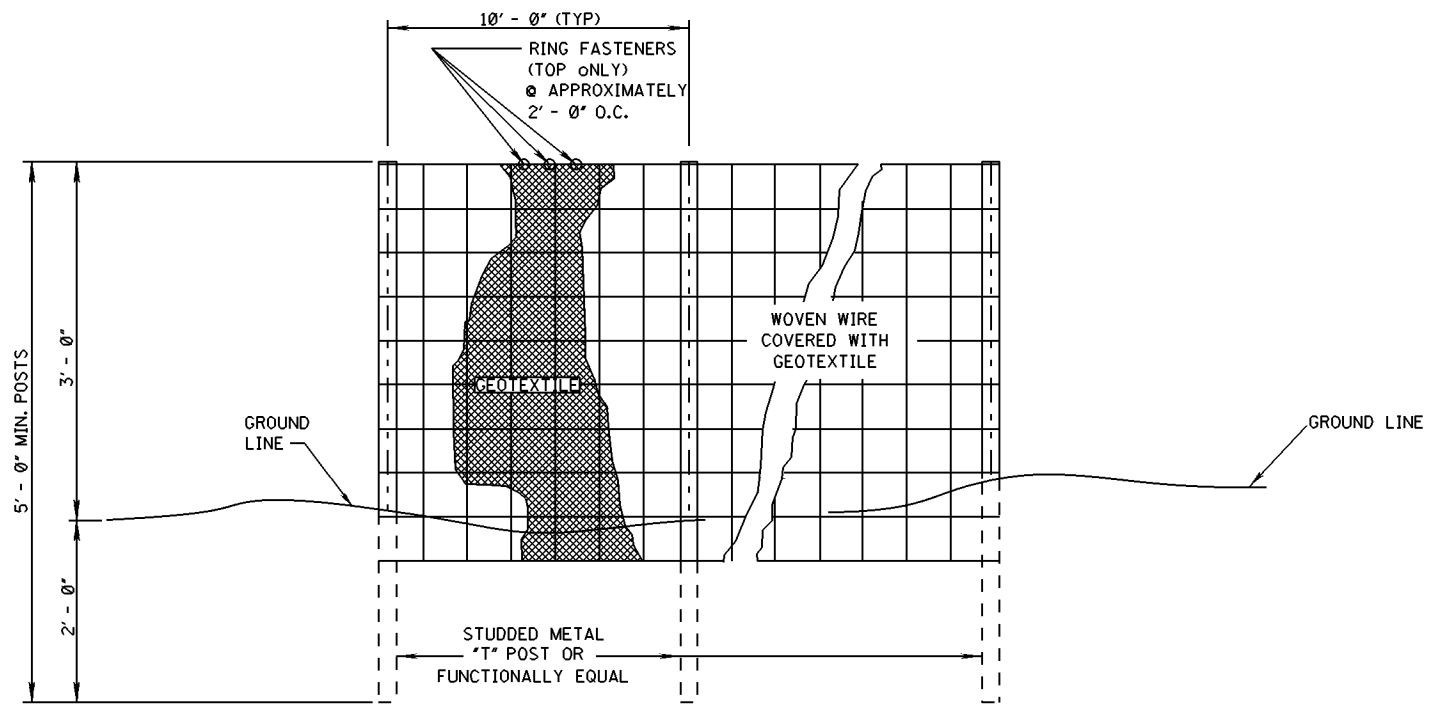

ELEVATION VIEW

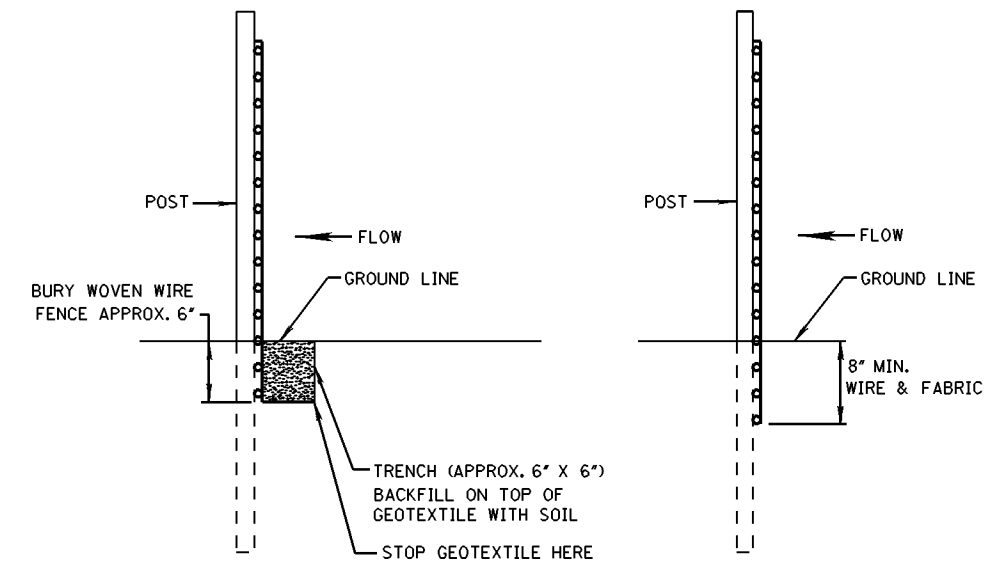

METHOD I

METHOD II
MECHANICAL INSTALLATION

SIDE VIEW

NOTES:
1. SILT FENCES SHALL BE USED IN AREAS WHERE FLOW IS NOT SEVERE.
2. SILT FENCES ARE TEMPORARY SEDIMENT CONTROL ITEMS THAT SHALL BE ERECTED OPPOSITE ERODIBLE AREAS SUCH AS NEWLY GRADED FILL SLOPES AND ADJACENT TO STREAMS AND CHANNELS.
3. SILT FENCE SHOULD BE PLACED WELL INSIDE RIGHT-OF-WAY AND ALONG EDGE OF CLEARING LIMITS. THIS WILL ALLOW ROOM FOR A BACK-UP FENCE IF FIRST FENCE BECOMES FULL.
4. WHEREVER POSSIBLE SILT FENCE SHALL BE CONSTRUCTED ACROSS A LEVEL AREA IN THE SHAPE OF A SMILE. THIS AIDS IN PONDING OF RUNOFF AND FACILITATES SEDIMENTATION.
5. THE CONTRACTOR MAY ELECT TO USE EITHER METHOD I OR METHOD II. COST TO BE LINEAR FEET OF SILT FENCE.
6. METHOD II INSTALLATION SHALL BE ACCOMPLISHED USING AN IMPLEMENT THAT IS MANUFACTUREED FOR THE APPLICATION AND PROVIDES A CONFIGURATION MEETING THE REQUIREMENTS OF THE DETAIL.
7. WIRE SHALL BE MINIMUM OF 32" IN WIDTH AND SHALL HAVE A MINIMUM OF 6 LINE WIRES WITH 12" STAY SPACING.
8. GEOTEXTILE FABRIC MEETING THE TYPE II MATERIAL REQUIREMENTS AND INSTALLED ACCORDING TO SPECIFICATION MAY BE USED WITHOUT WIRE FENCE,

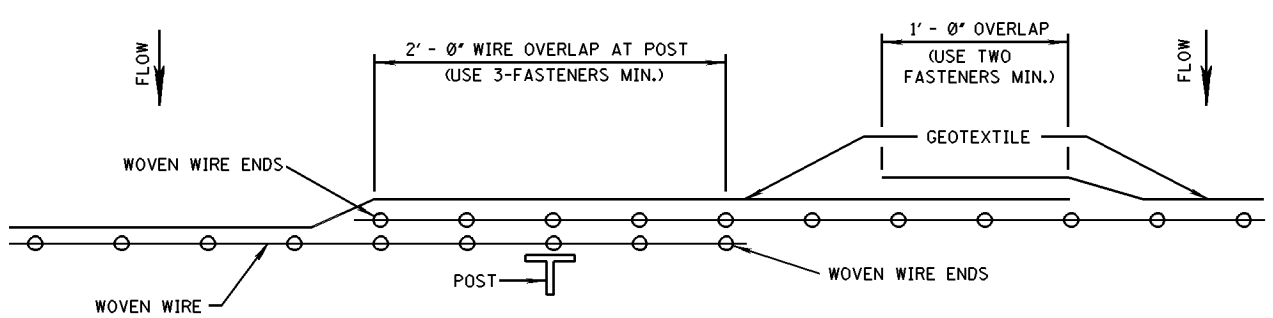

PLAN VIEW

REQUIRED LAPPING

MISSISSIPPI DEPARTMENT OF TRANSPORTATION

DETAILS OF SILT FENCE INSTALLATION

DATE	REVISION	BY

FILENAME: EROSION CONTROL\ECD-3.DGN
DESIGN TEAM _____ CHECKED _____ DATE _____

WORKING NUMBER ECD-3
SHEET NUMBER

PLAN
ROADWAY DESIGN DIVISION
MISSISSIPPI DEPARTMENT OF TRANSPORTATION
1/20/2010 8:09 AM ECD-3.DGN

STATE	PROJECT NO.
MISS.	

REFERENCE PROJECT NO	FISCAL YEAR	SHEET NO

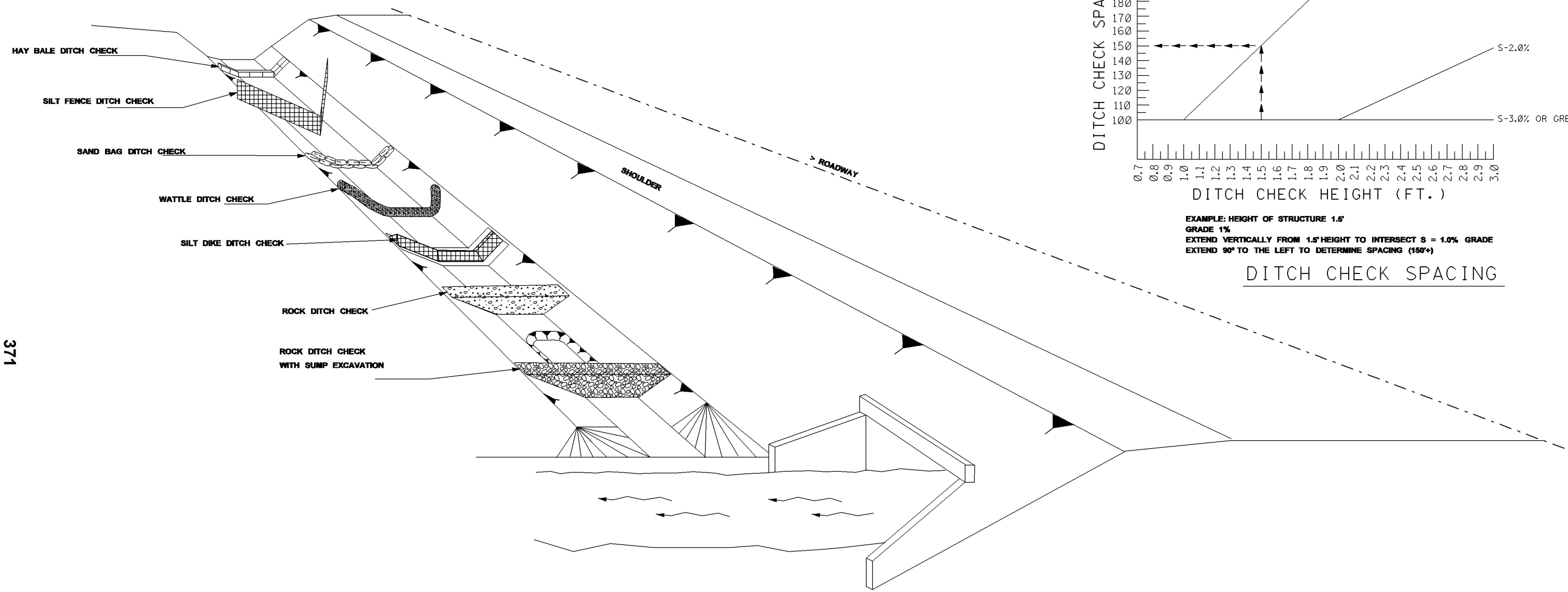

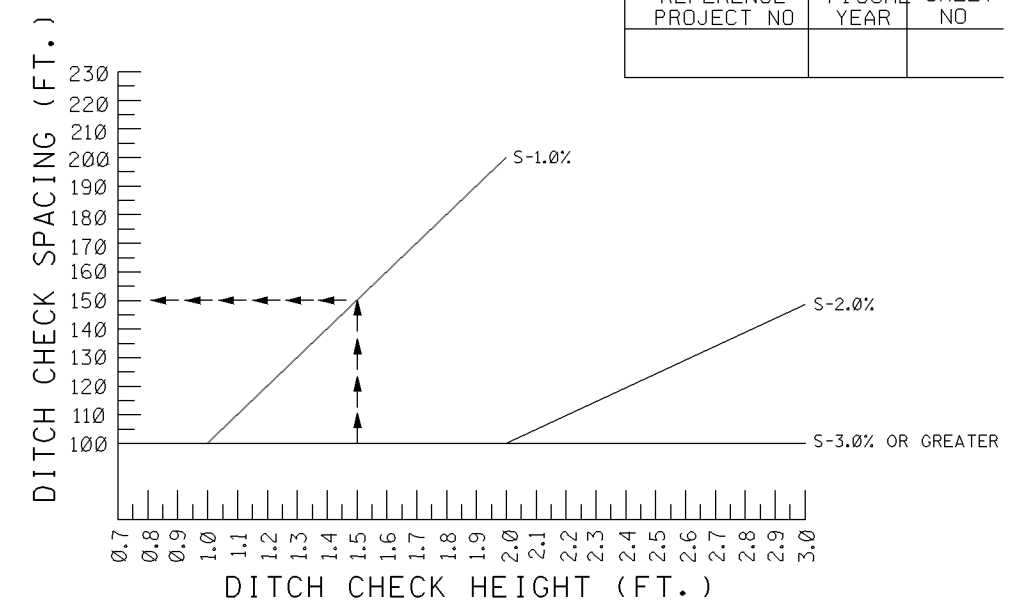

EXAMPLE: HEIGHT OF STRUCTURE 1.5'
GRADE 1%
EXTEND VERTICALLY FROM 1.5' HEIGHT TO INTERSECT S = 1.0% GRADE
EXTEND 90° TO THE LEFT TO DETERMINE SPACING (150'+)

DITCH CHECK SPACING

NOTES:

1. THE DITCH CHECK PERSPECTIVE ILLUSTRATES A TOOL BOX OF TEMPORARY PRACTICES THAT MAY BE USED. DITCH CHECKS ARE INSTALLED TO CONTROL RUNOFF VELOCITY AND THUS REDUCE EROSION AND PROVIDE FOR TRAPPING OF SEDIMENTS.
2. SELECTION OF THE APPROPRIATE DITCH CHECK SHOULD BE A FUNCTION OF CONSTRUCTION PHASE, DRAINAGE AREA, DITCH GRADIENT, SOIL TYPE ECONOMY AND SAFETY.
3. DITCH CHECKS CAN BE REMOVED FOR MAINTENANCE AND/OR REPLACEMENT BUT MUST REMAIN IN PLACE UNTIL UPSLOPE AREAS HAVE BEEN PERMANENTLY STABILIZED. MAINTENANCE INCLUDES REMOVAL OF SEDIMENT BEGINNING WHEN SEDIMENT ACCUMULATION REACHES 1/3 THE CAPACITY OR HEIGHT OF THE STRUCTURE AND NEVER ALLOWING FOR SEDIMENT TO ACCUMULATE MORE THAN 1/2 THE VOLUME OR HEIGHT OF THE DITCH CHECK STRUCTURE.
4. HAY BALES ARE USED TO INTERCEPT LOW VOLUME FLOWS IN LOW TO MODERATE GRADIENT DITCHES.
5. SILT FENCE DITCH CHECKS ARE USED WHERE IT HAS BEEN DETERMINED THAT HAY BALE CHECKS ARE INADEQUATE. SILT FENCE DITCH CHECKS ARE USED TO INTERCEPT LOW VOLUME FLOWS IN LOW TO MODERATE GRADIENT DITCHES.
6. SAND BAG DITCH CHECKS ARE USED FOR VELOCITY REDUCTION AND MINIMAL SEDIMENT TRAPPING IN CONCRETE PAVED DITCHES OR IN DITCHES THAT HAVE ROCKY BOTTOMS.
7. WATTLE DITCH CHECKS ARE APPROPRIATE FOR VELOCITY REDUCTION AND CONTROL OF SEDIMENT TRANSPORT UNDER LOW TO MEDIUM FLOW CONDITIONS.
8. SILT DIKES CAN BE USED IN DITCHES WITH CONCENTRATED FLOWS WITHIN THE CLEAR ZONE WHERE RIPRAP CAN NOT BE USED. AS CONSTRUCTION PROGRESSES.
9. ROCK DITCH CHECK WITH SUMP EXCAVATION CAN BE PLACED IN DITCHES TO ASSURE ON-SITE SEDIMENT TRAPPING REQUIREMENTS ARE MET. DITCH CHECK WITH SUMP EXCAVATION IS USED WHEN DITCHES RECEIVE DRAINAGE FROM CUT OR FILL SLOPES OR OTHER CRITICAL AREAS WHERE SOIL EROSION IS EXPECTED. DRAINAGE AREA FOR A TEMPORARY SEDIMENT TRAP SHALL NOT EXCEED 3 ACRES. THEY CAN BE USED IN SERIES TO INCREASE ON-SITE SEDIMENT TRAPPING EFFICIENCY.
10. IN GENERAL, DITCH CHECKS SHOULD NOT BE PLACED IN LIVE STREAMS.
11. CONFIGURATION AND SPACING MAY BE ADJUSTED IF APPROVED BY THE ENGINEER TO ACCOMODATE TRAVELWAY SAFETY, WATER FLOW, OR SOIL AND INSTALLATION CHALLENGES.

REVISION	BY	DATE

MISSISSIPPI DEPARTMENT OF TRANSPORTATION

DITCH CHECK STRUCTURES, TYPICAL APPLICATIONS AND DETAILS

WORKING NUMBER
ECD-4
SHEET NUMBER

FILENAME: EROSION CONTROL\ECD-4.DGN
DESIGN TEAM_____ CHECKED_____ DATE_____

PLAN
ROADWAY DESIGN DIVISION
MISSISSIPPI DEPARTMENT OF TRANSPORTATION

371

1/20/2010 8:10 AM ECD-4.DGN

STATE	PROJECT NO.
MISS.	

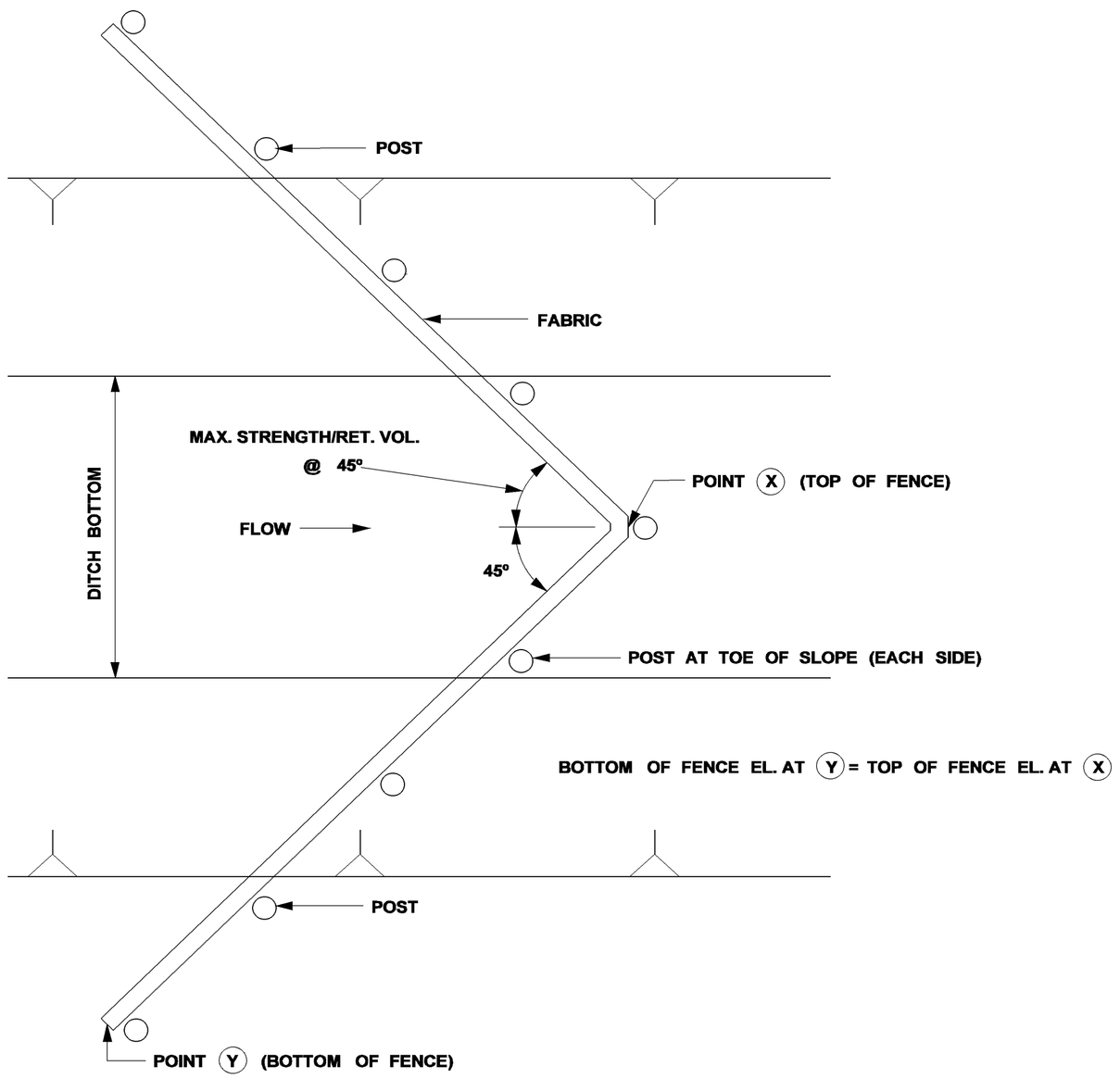

PLAN VIEW

NOTES:

1. ANCHOR AND INSTALL PER DETAILS FOR SILT FENCE SPACING GUIDELINES ON ECD-4
2. A "W" SHAPE MAY BE USED FOR WIDER DITCHES.

SILT FENCE DITCH CHECK SELECTION GUIDELINES

SILT FENCE DITCH CHECKS ARE USED WHERE IT HAS BEEN DETERMINED THAT HAY BALE CHECKS ARE INADEQUATE. SILT FENCE DITCH CHECKS ARE USED TO INTERCEPT LOW VOLUME FLOWS IN LOW TO MODERATE GRADIENT DITCHES.

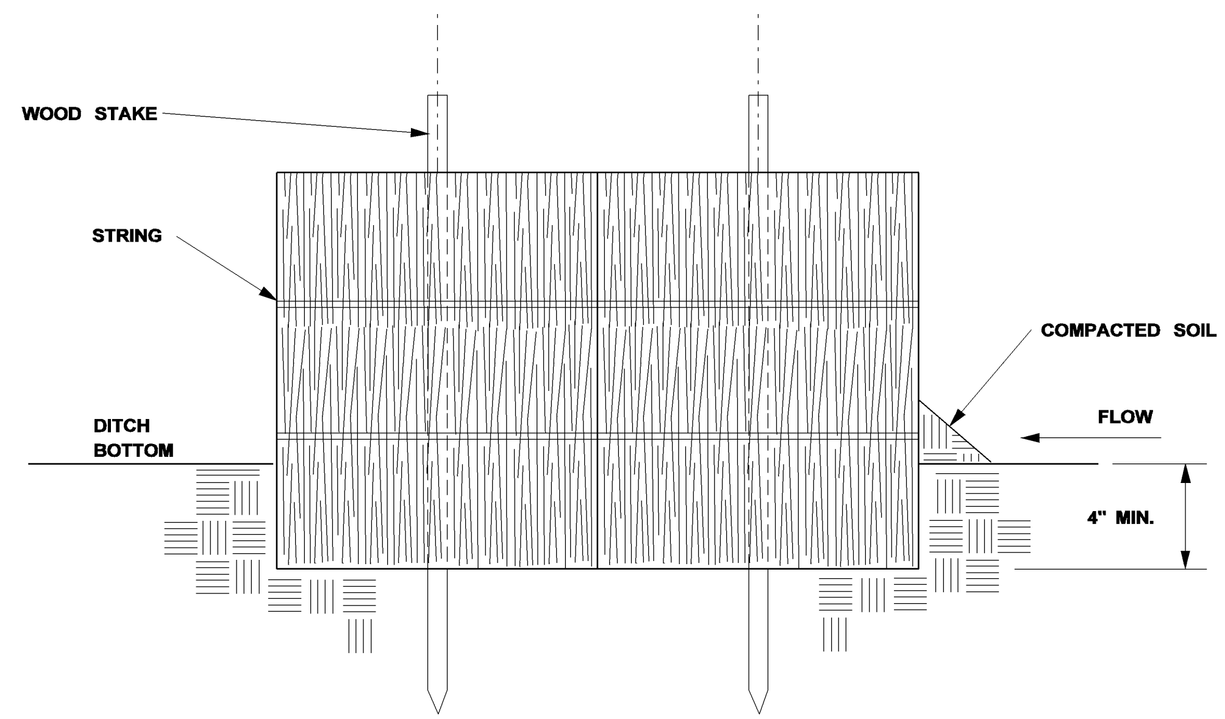

SECTION A-A

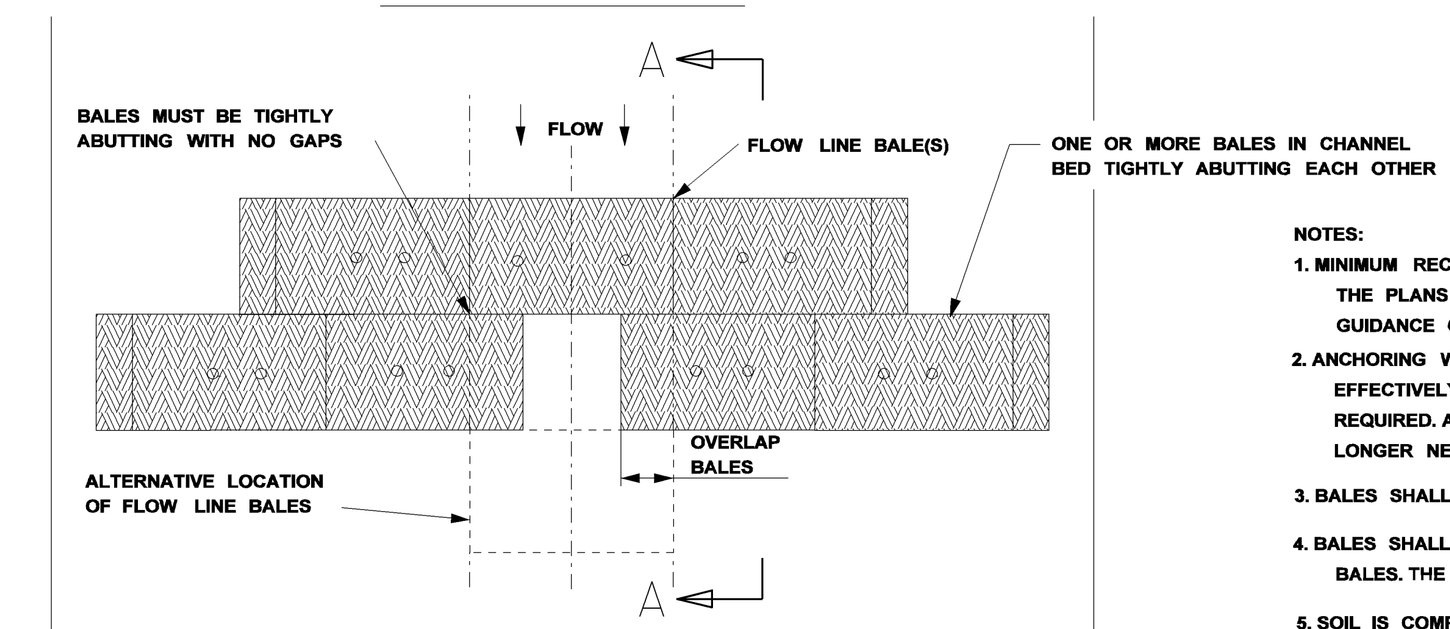

PLAN VIEW
TRAPEZOIDAL DITCH

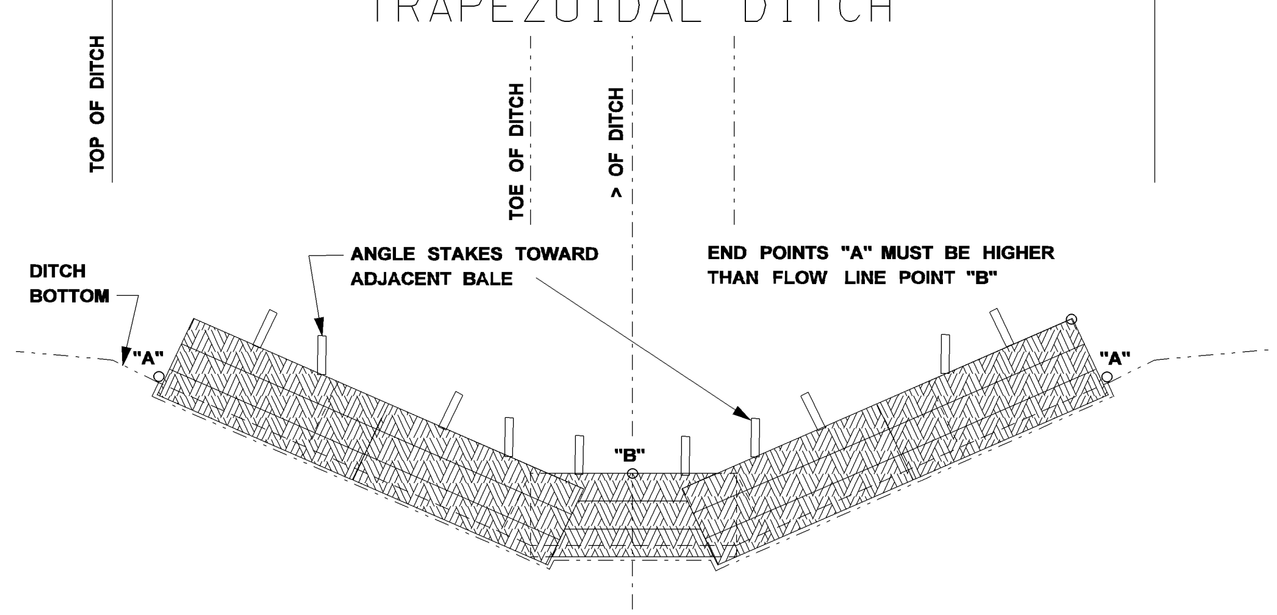

PROFILE VIEW
TRAPEZOIDAL DITCH

NOTES:

1. MINIMUM RECOMMENDED CHECK SPACING IS 100 FEET UNLESS SHOWN OTHERWISE ON THE PLANS OR EROSION CONTROL PLAN APPROVED BY THE ENGINEER, SEE SPACING GUIDANCE ON ECD-4.
2. ANCHORING WOOD STAKES SHALL BE SIZED, SPACED, AND BE OF A MATERIAL THAT EFFECTIVELY SECURES THE CHECK. A MINIMUM OF TWO STAKES PER BALE IS REQUIRED. ALL NON-DEGRADABLE MATERIALS SHALL BE REMOVED WHEN NO LONGER NEEDED.
3. BALES SHALL BE EMBEDDED IN THE SOIL A MIN. OF 4".
4. BALES SHALL BE PLACED IN A ROW WITH ENDS TIGHTLY ABUTTING THE ADJACENT BALES. THE BALES SHALL BE PLACED WITH BINDINGS PARALLEL TO THE GROUND.
5. SOIL IS COMPACTED ALONG THE BASE OF THE UPSTREAM FACE TO PREVENT PIPING.
6. MULTIPLE ADJACENT ROWS OF BALES ARE REQUIRED AS SHOWN.

HAY BALE DITCH CHECK SELECTION GUIDELINES

HAY BALES ARE USED TO INTERCEPT LOW VOLUME FLOWS IN LOW TO MODERATE GRADIENT DITCHES.

DATE	REVISION	BY

MISSISSIPPI DEPARTMENT OF TRANSPORTATION

TEMPORARY EROSION, SEDIMENT AND WATER POLLUTION CONTROL MEASURES, SILT FENCE AND HAY BALE DITCH CHECKS

FILENAME: EROSION CONTROL\ECD-5.DGN

DESIGN TEAM _____ CHECKED _____ DATE _____

WORKING NUMBER
ECD-5
SHEET NUMBER

MISSISSIPPI DEPARTMENT OF TRANSPORTATION ROADWAY DESIGN DIVISION
1/28/2010 8:58 AM ECD-5.DGN

STATE	PROJECT NO.
MISS.	

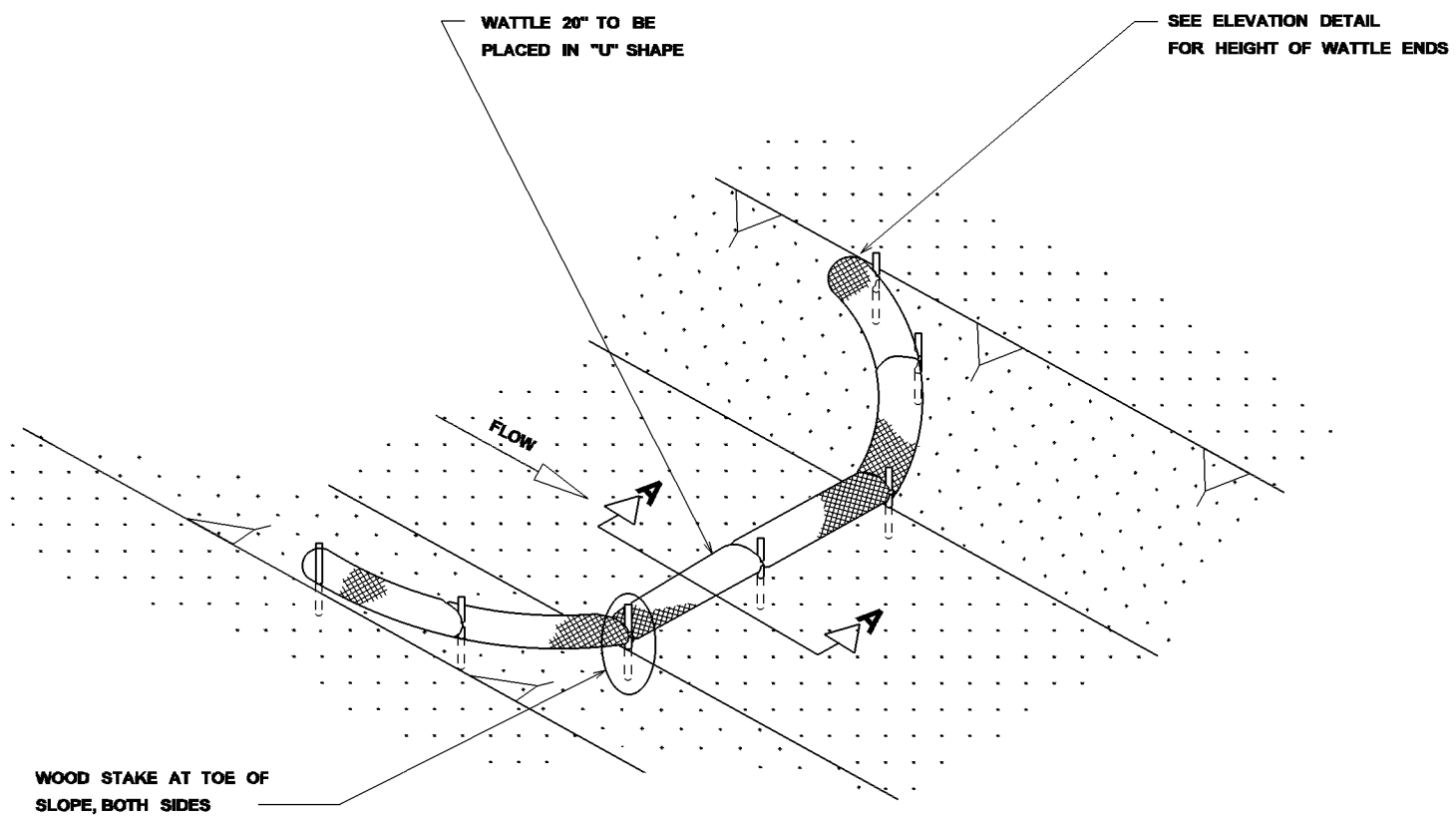

DETAIL (DITCH CHECK)

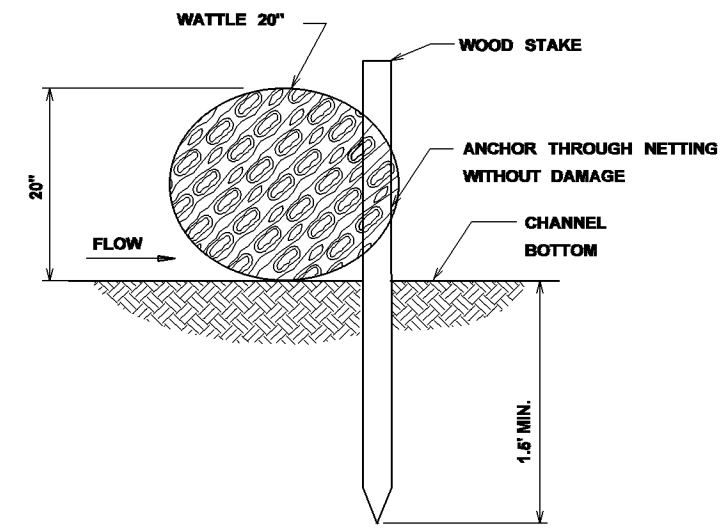

SECTION A-A

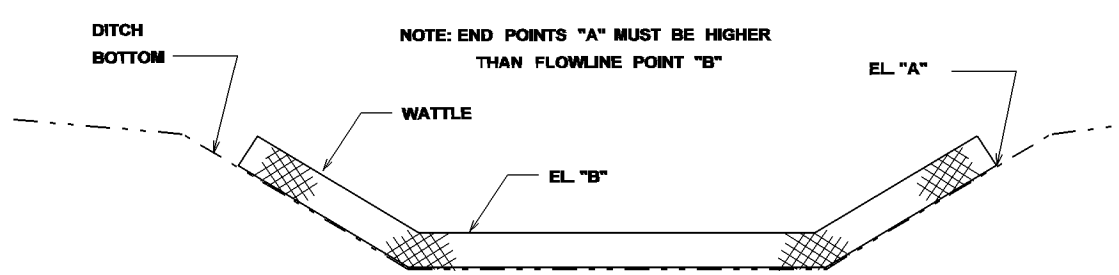

ELEVATION DETAIL

NOTES:

1. MINIMUM RECOMMENDED PLACEMENT INTERVAL BETWEEN WATTLE DITCH CHECK IS 100' UNLESS SHOWN OTHERWISE ON THE PLANS OR EROSION CONTROL PLAN APPROVED BY THE ENGINEER. SEE SPACING GUIDANCE ON ECD-4
2. ANCHORING WOOD STAKES SHALL BE SIZED, SPACED, DRIVEN, AND BE OF A MATERIAL THAT EFFECTIVELY SECURES THE CHECK. STAKE SPACING SHALL BE A MAXIMUM OF THREE FEET. ALL NON-DEGRADABLE MATERIALS SHALL BE REMOVED WHEN NO LONGER NEEDED.
3. TRENCHING OF WATTLES MAY BE NECESSARY IF PIPING BECOMES EVIDENT.
4. WATTLES SHOULD NOT BE USED IN HARD BOTTOM CHANNELS.

WATTLE DITCH CHECK SELECTION GUIDELINES

WATTLE DITCH CHECKS ARE APPROPRIATE FOR VELOCITY REDUCTION AND CONTROL OF SEDIMENT TRANSPORT UNDER LOW TO MEDIUM FLOW CONDITIONS.

REVISION	BY	DATE

MISSISSIPPI DEPARTMENT OF TRANSPORTATION

DETAILS OF EROSION CONTROL
WATTLE DITCH CHECK

WORKING NUMBER
ECD-6
SHEET NUMBER

FILENAME: EROSION CONTROL\ECD-6.DGN
DESIGN TEAM _____ CHECKED _____ DATE _____

PLAN
ROADWAY DESIGN DIVISION
MISSISSIPPI DEPARTMENT OF TRANSPORTATION

373

1/19/2010 12:21 PM ECD-6.DGN

STATE	PROJECT NO.
MISS.	

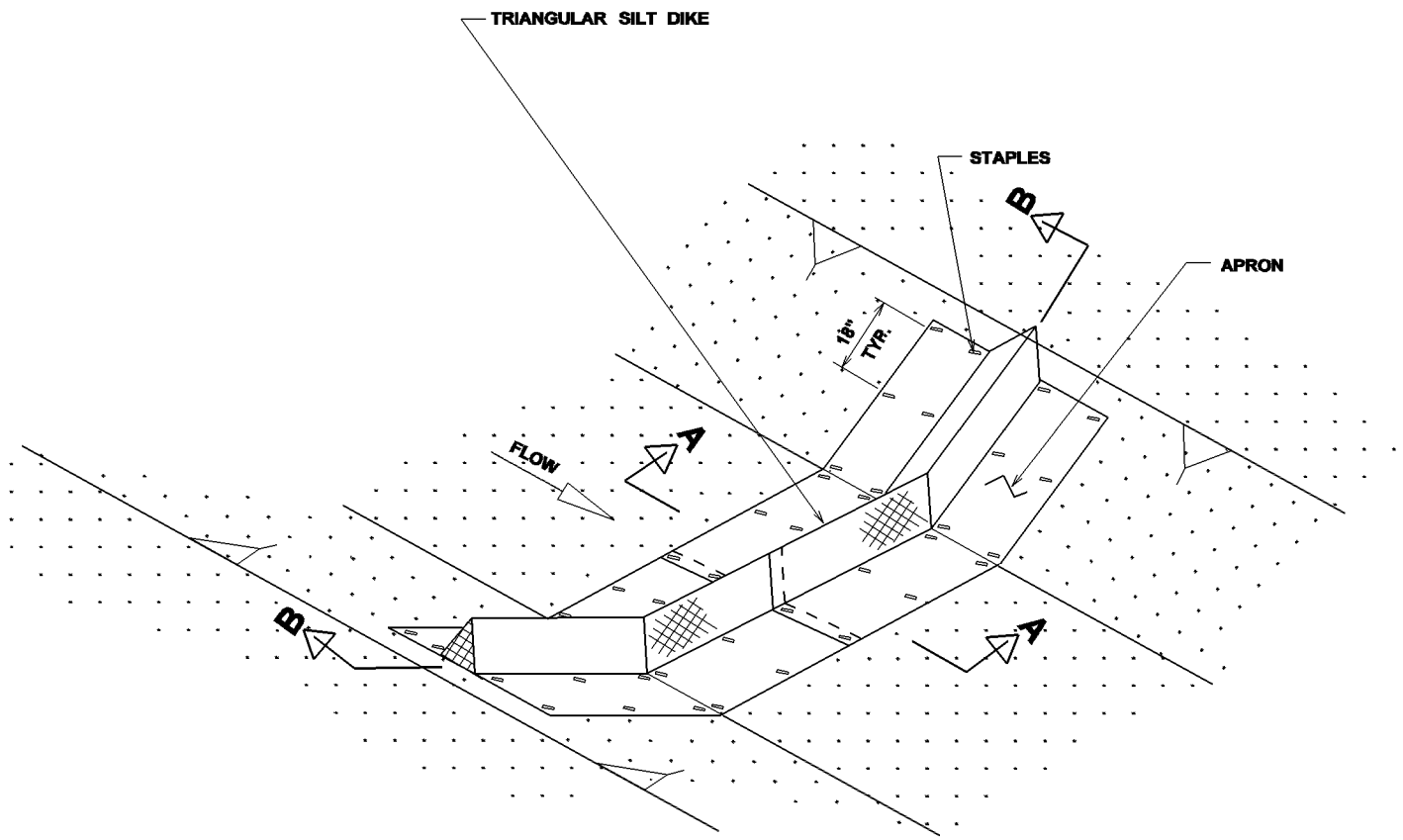

PLAN VIEW

SILT DIKE DITCH CHECK SELECTION GUIDELINES

SILT DIKES CAN BE USED IN DITCHES WITH CONCENTRATED FLOWS WITHIN THE CLEAR ZONE WHERE RIPRAP CAN NOT BE USED.

NOTE:

1. MINIMUM RECOMMENDED PLACEMENT INTERVAL BETWEEN SILT DIKE DITCH CHECK IS 100' UNLESS SHOWN OTHERWISE ON THE PLANS OR EROSION CONTROL PLAN APPROVED BY THE ENGINEER. SEE SPACING GUIDANCE ON ECD-4
2. INSTALLATION SHALL BE IN ACCORDANCE WITH MANUFACTURERS RECOMMENDATIONS.

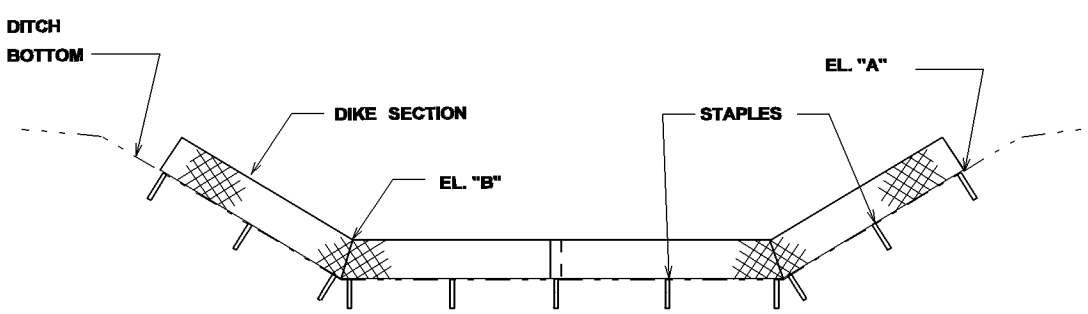

POINT "A" MUST BE HIGHER THAN POINT "B" TO ENSURE THAT WATER FLOWS OVER THE DIKE AND NOT AROUND THE ENDS

SECTION B-B

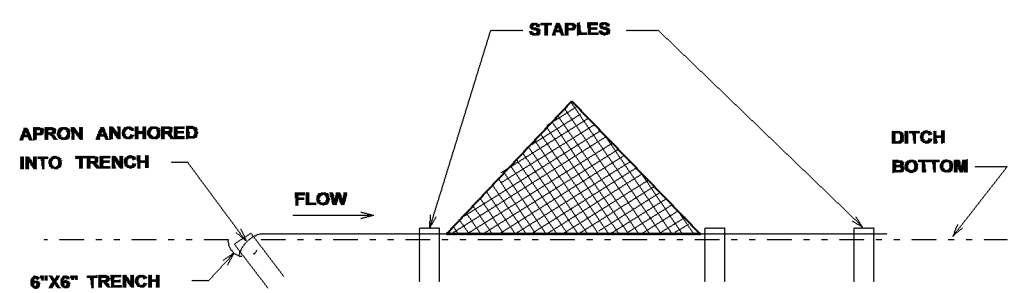

NOTE: STAPLES SHALL BE PLACED WHERE THE UNITS OVERLAP AND IN THE CENTER OF THE UNIT

SECTION A-A

SILT DIKE INSTALLATION FOR ROADWAY DITCHES

REVISION	BY	DATE

MISSISSIPPI DEPARTMENT OF TRANSPORTATION

DETAILS OF EROSION CONTROL
SILT DIKE DITCH CHECK

WORKING NUMBER
ECD-7
SHEET NUMBER

FILENAME: EROSION CONTROL\ECD-7.DGN
DESIGN TEAM _____ CHECKED _____ DATE _____

PLAN
ROADWAY DESIGN DIVISION
MISSISSIPPI DEPARTMENT OF TRANSPORTATION
1/20/2010 8:11 AM ECD-7.DGN

STATE	PROJECT NO.
MISS.	

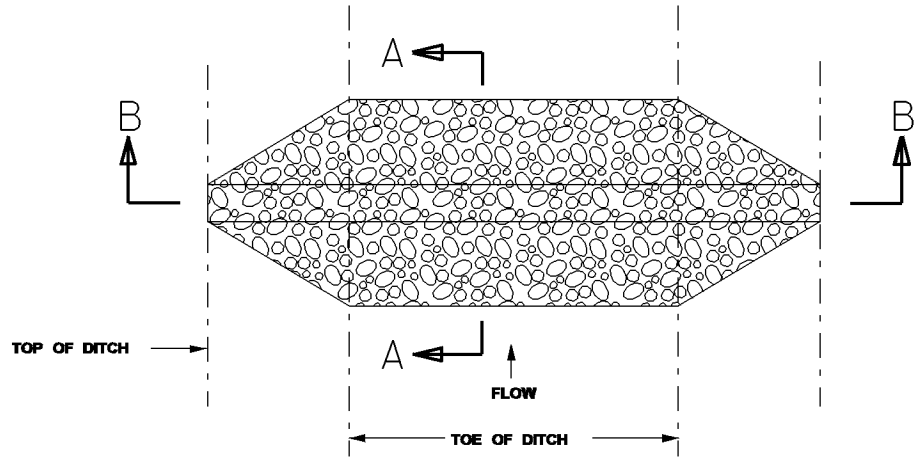

PLAN VIEW

DETAIL FOR TRAPEZOIDAL DITCH

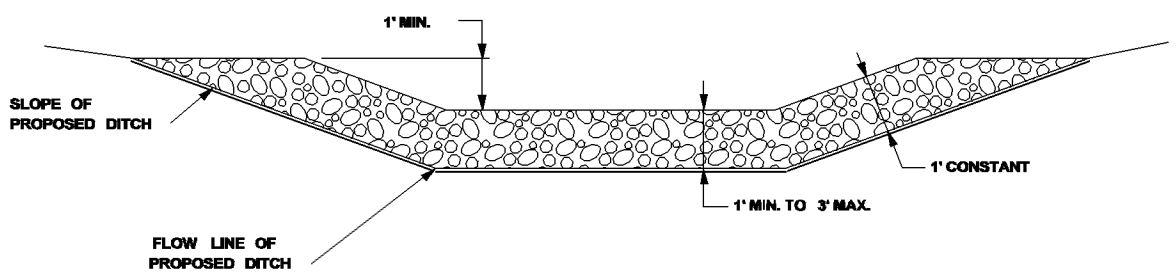

SECTION B-B

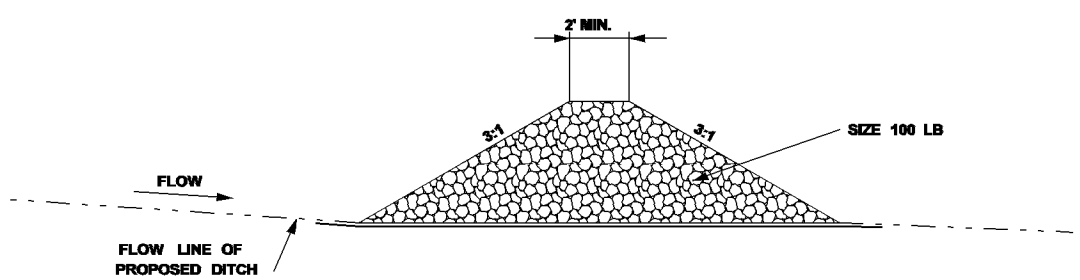

SECTION A-A

TEMPORARY ROCK DITCH CHECKS IN ROADSIDE DITCHES

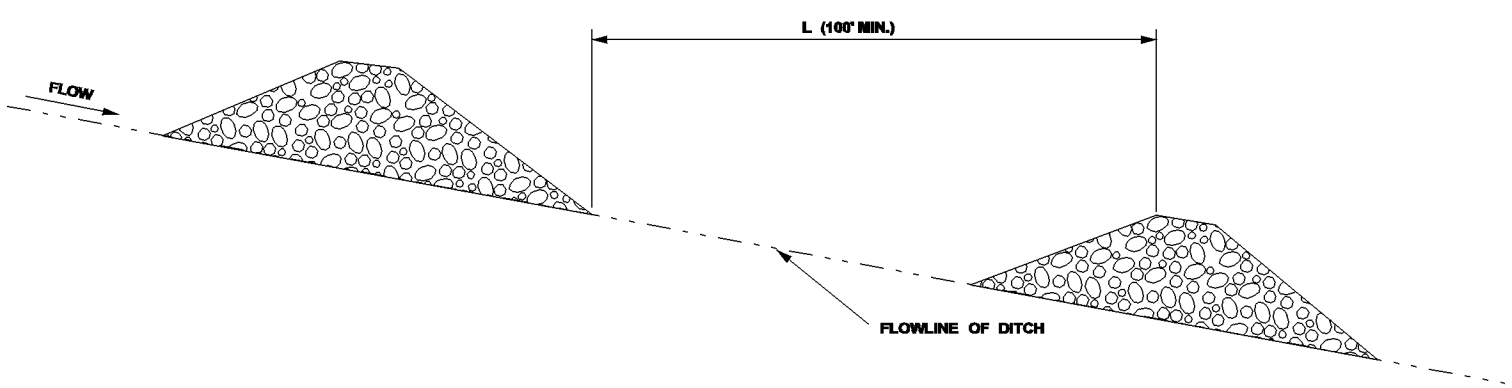

DETAIL FOR SPACING BETWEEN DITCH CHECKS

NOTES:

1. MINIMUM SPACING FOR ROCK DITCH CHECKS SHALL BE 100 FEET OR EROSION CONTROL PLAN APPROVED BY THE ENGINEER. SEE SPACING GUIDANCE ON ECD-4
2. ROCK DITCH CHECKS MAY ALSO BE CHOKED WITH FABRIC.
3. SIZE 300 LB RIP RAP MAY BE USED FOR SPECIFED APPLICATIONS AS SHOWN ON EROSION CONTROL PLAN

REVISION	BY	DATE

MISSISSIPPI DEPARTMENT OF TRANSPORTATION

ROCK DITCH CHECK

WORKING NUMBER ECD-8

SHEET NUMBER

FILENAME: EROSION CONTROL\ECD-8.DGN

DESIGN TEAM _____ CHECKED _____ DATE _____

PLAN
ROADWAY DESIGN DIVISION
MISSISSIPPI DEPARTMENT OF TRANSPORTATION

375

1/19/2010 12:22PM ECD-8.DGN

STATE	PROJECT NO.
MISS.	

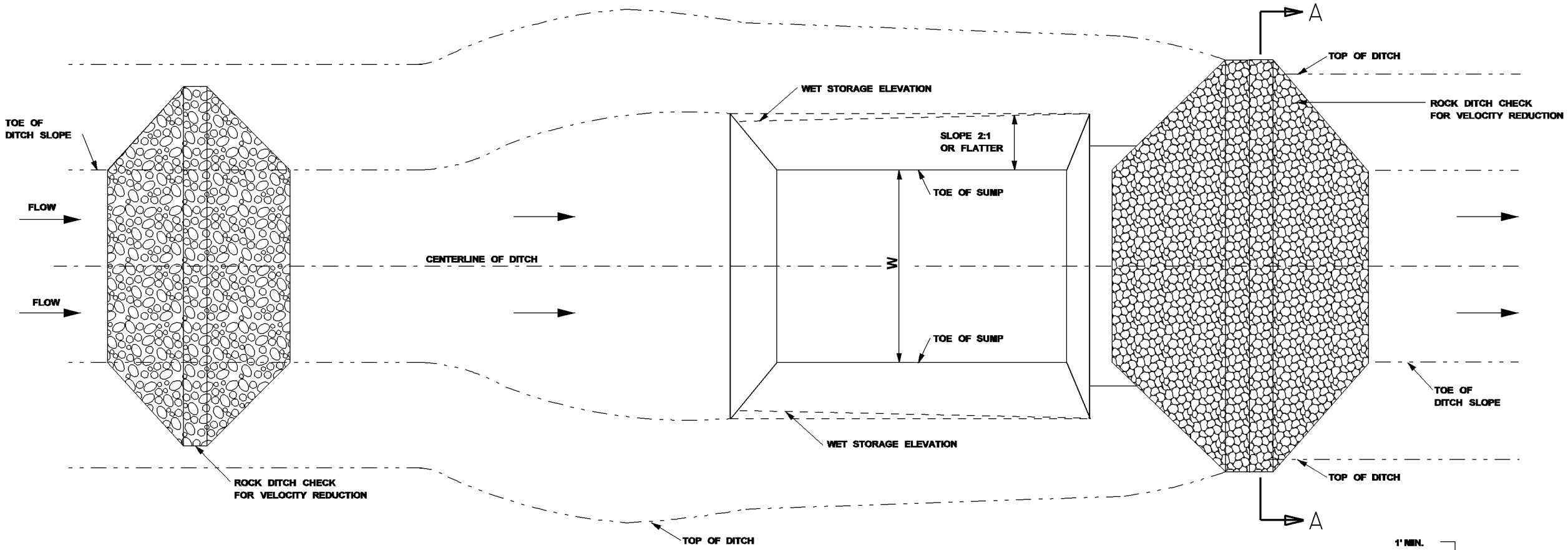

PLAN VIEW

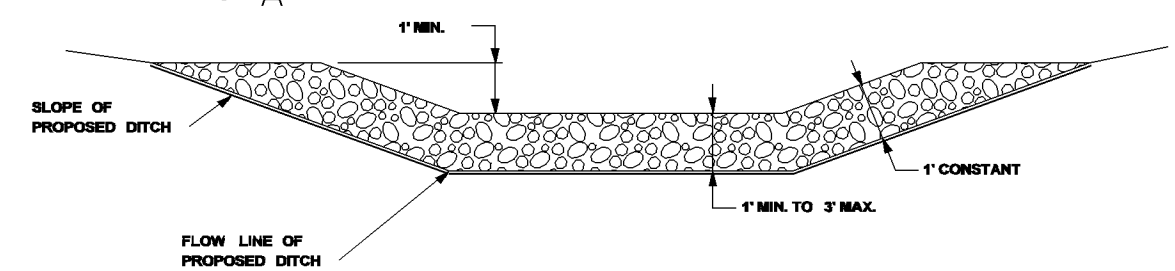

SECTION A-A

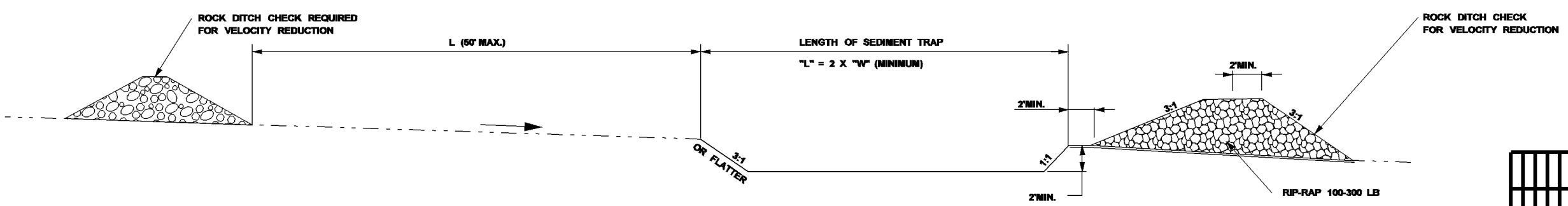

PROFILE VIEW

BY	MISSISSIPPI DEPARTMENT OF TRANSPORTATION
REVISION	ROCK DITCH CHECK WITH SUMP EXCAVATION
DATE	FILENAME: EROSION CONTROL\ECD-9.DGN DESIGN TEAM ____ CHECKED ____ DATE ____

WORKING NUMBER
ECD-9
SHEET NUMBER

PLAN
ROADWAY DESIGN DIVISION
MISSISSIPPI DEPARTMENT OF TRANSPORTATION
1/19/2010 12:23PM ECD-9.DGN

STATE	PROJECT NO.
MISS.	

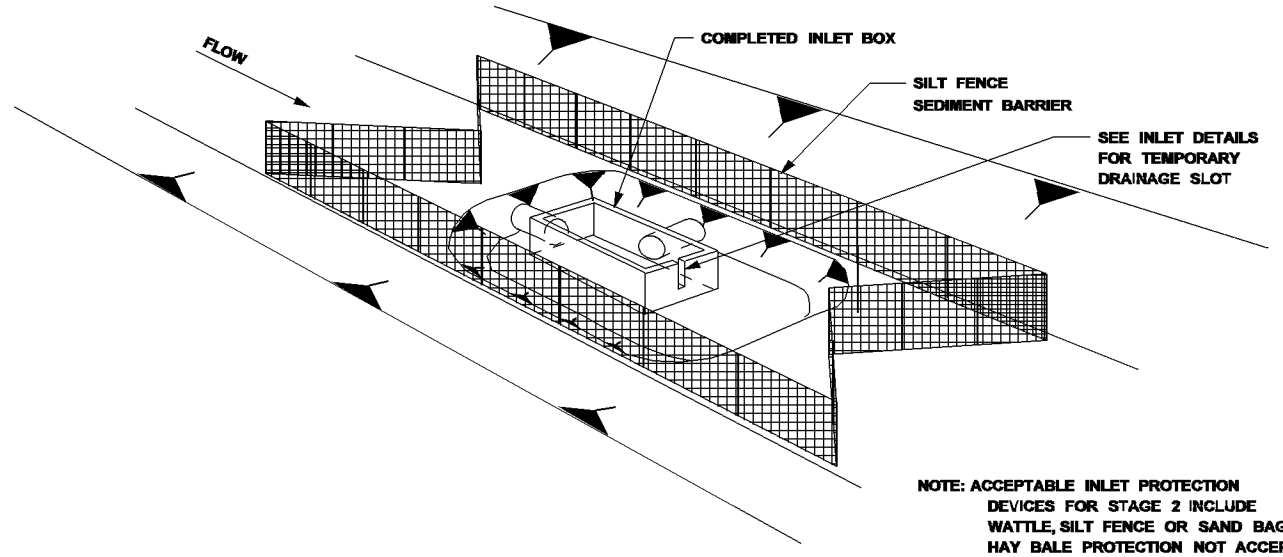

NOTE: ACCEPTABLE INLET PROTECTION DEVICES FOR STAGE 2 INCLUDE WATTLE, SILT FENCE OR SAND BAGS. HAY BALE PROTECTION NOT ACCEPTABLE DURING THIS PHASE.

STAGE 2

INLET/JUNCTION BOX CONSTRUCTED BUT NOT BACKFILLED

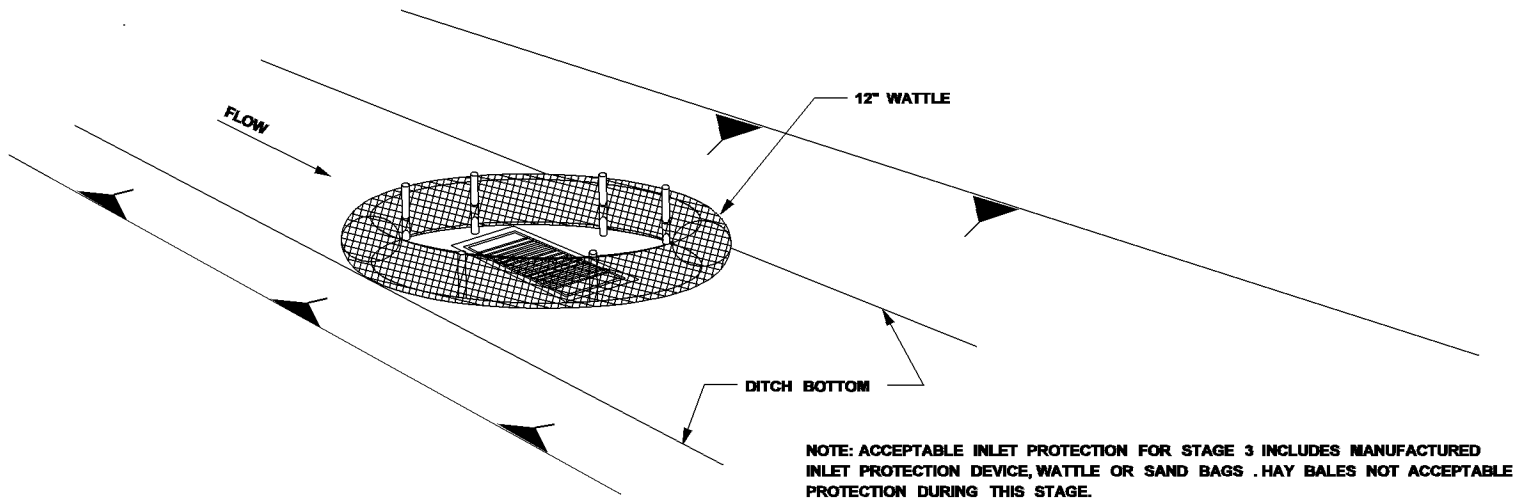

NOTE: ACCEPTABLE INLET PROTECTION FOR STAGE 3 INCLUDES MANUFACTURED INLET PROTECTION DEVICE, WATTLE OR SAND BAGS . HAY BALES NOT ACCEPTABLE PROTECTION DURING THIS STAGE.

STAGE 3

INLET CONSTRUCTED AND BACKFILLED

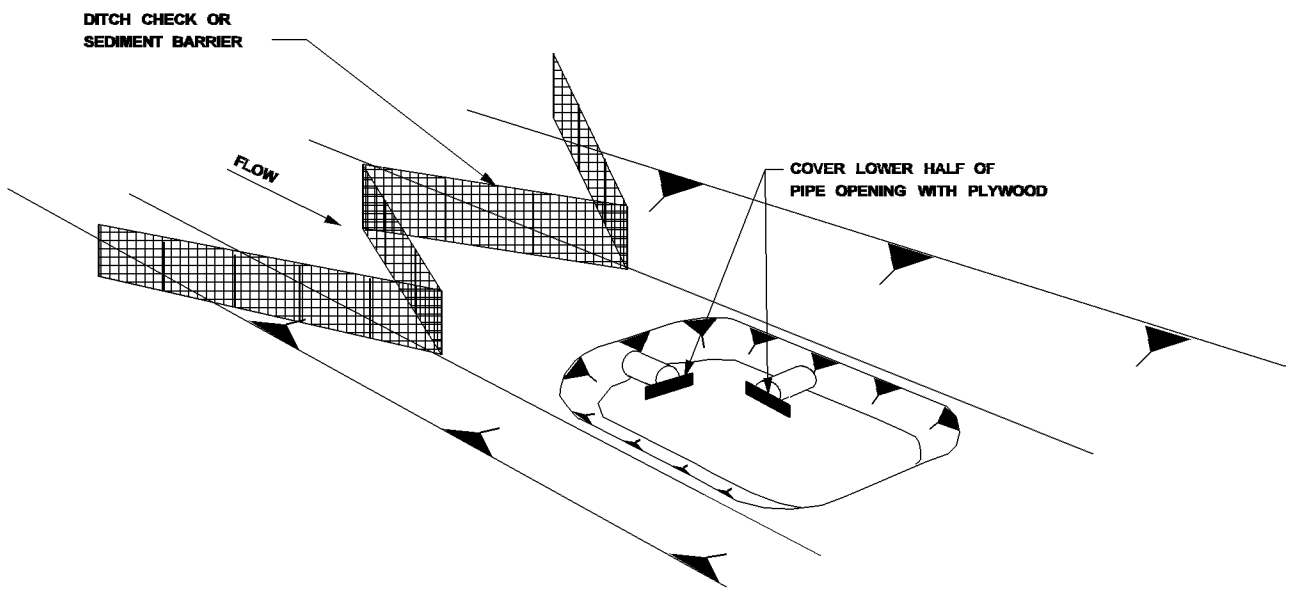

STAGE 1

INLET/JUNCTION BOX LOCATION EXCAVATED

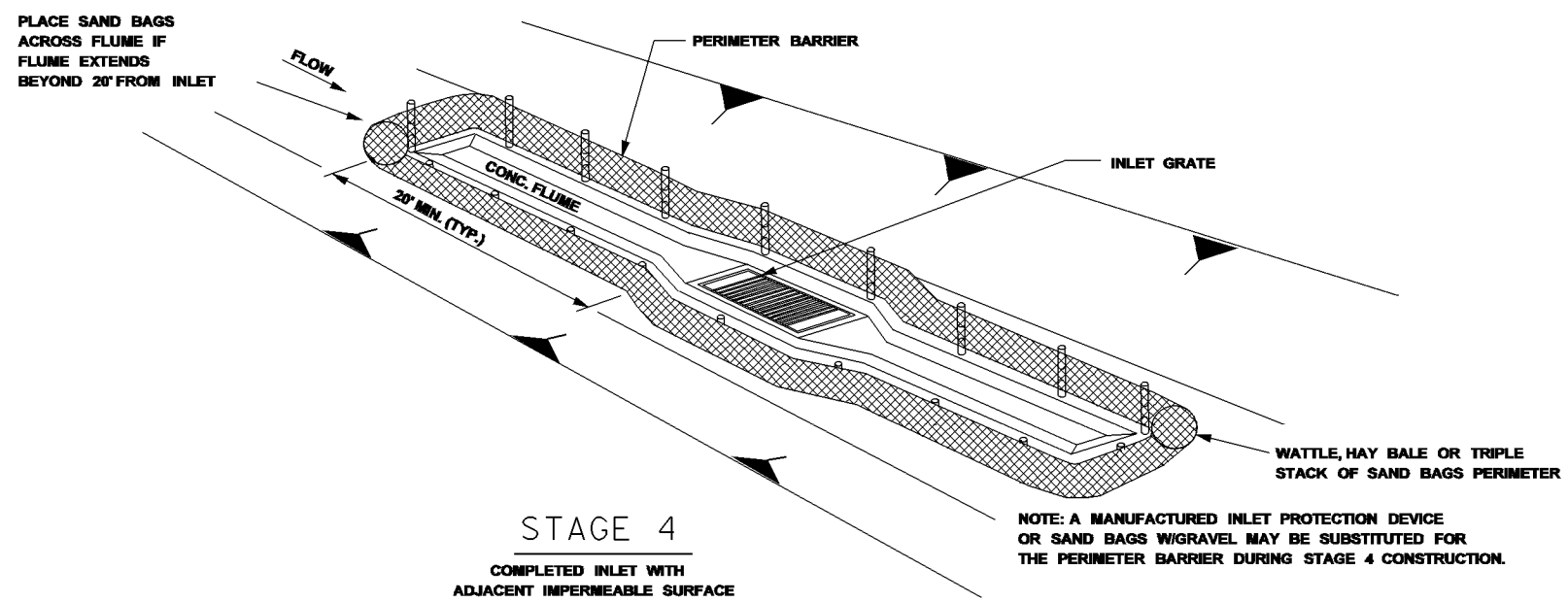

NOTE: A MANUFACTURED INLET PROTECTION DEVICE OR SAND BAGS W/GRAVEL MAY BE SUBSTITUTED FOR THE PERIMETER BARRIER DURING STAGE 4 CONSTRUCTION.

STAGE 4

COMPLETED INLET WITH ADJACENT IMPERMEABLE SURFACE

DITCH INLET CONSTRUCTION STAGES

NOTES:

1. FOUNDATION BACKFILL SHOULD BE PLACED IN STAGE 1 IMMEDIATELY AFTER PIPE INSTALLATION. INLET CONSTRUCTION SHOULD COMMENCE AS SOON AS POSSIBLE AND BE CONTINUOUS THROUGH COMPLETION.
2. CONFIGURATIONS MAY BE ADJUSTED WITH APPROVAL OF THE ENGINEER FOR TRAVELWAY SAFETY, WATER FLOW, SOIL OR INSTALLATION CHALLENGES.
3. DURING STAGE 1 AND STAGE 2, SILT FENCE MAY BE REQUIRED UPSLOPE OF THE INLET EXCAVATION AS DIRECTED BY THE ENGINEER.
4. IF SILT FENCING IS INSTALLED AROUND THE INLET EXCAVATION IT SHOULD BE PLACED IN A CONFIGURATION THAT WILL ALLOW INLET CONSTRUCTION.

DATE	REVISION	BY

MISSISSIPPI DEPARTMENT OF TRANSPORTATION

INLET PROTECTION
TYPICAL APPLICATIONS AND DETAILS

WORKING NUMBER
ECD-10
SHEET NUMBER

FILENAME: EROSION CONTROL\ECD-10.DGN

DESIGN TEAM _____ CHECKED _____ DATE _____

PLAN
ROADWAY DESIGN DIVISION
MISSISSIPPI DEPARTMENT OF TRANSPORTATION
1/19/2010 12:24PM ECD-10.DGN

STATE	PROJECT NO.
MISS.	

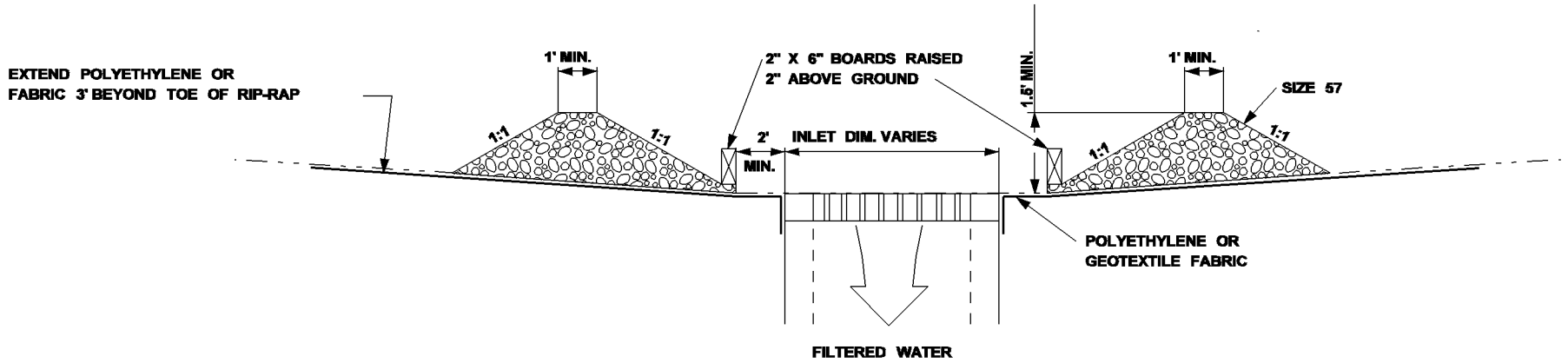

SECTION B-B

NOTES:

1. THE ELEVATION OF THE TOP OF THE REQUIRED STONE BERM SHALL BE A MINIMUM OF 1.5' ABOVE THE ELEVATION OF THE INLET WORKING POINT AND A MINIMUM OF 6" BELOW THE ELEVATION OF THE OUTSIDE EDGE OF THE INSIDE SHOULDER.

2. THIS COARSE AGGREGATE INLET PROTECTION SHALL NOT BE UTILIZED DURING STAGE 1 AND STAGE 2 INLET CONSTRUCTION. SEE INLET PROTECTION TYPICAL APPLICATIONS AND DETAILS)

3. 2" X 6" BOARDS MAY BE REPLACED WITH WIRE MESH W/OPENINGS LESS THAN 1" X 1". COST IS ABSORBED.

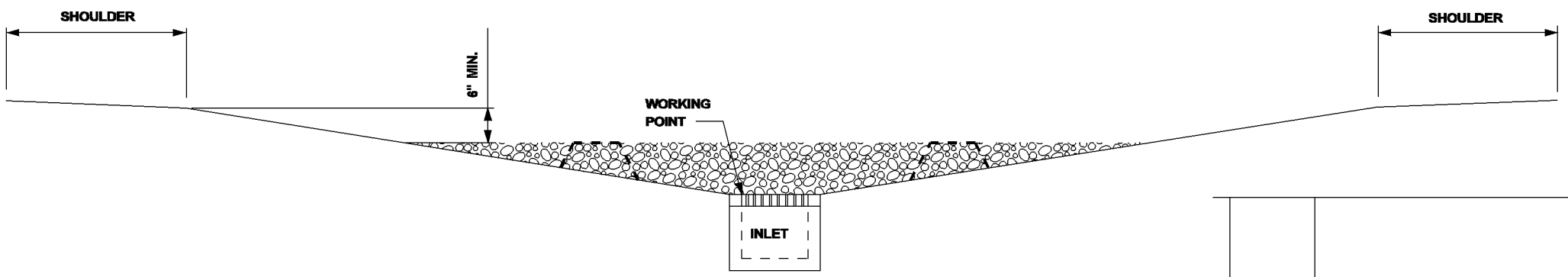

SECTION A-A

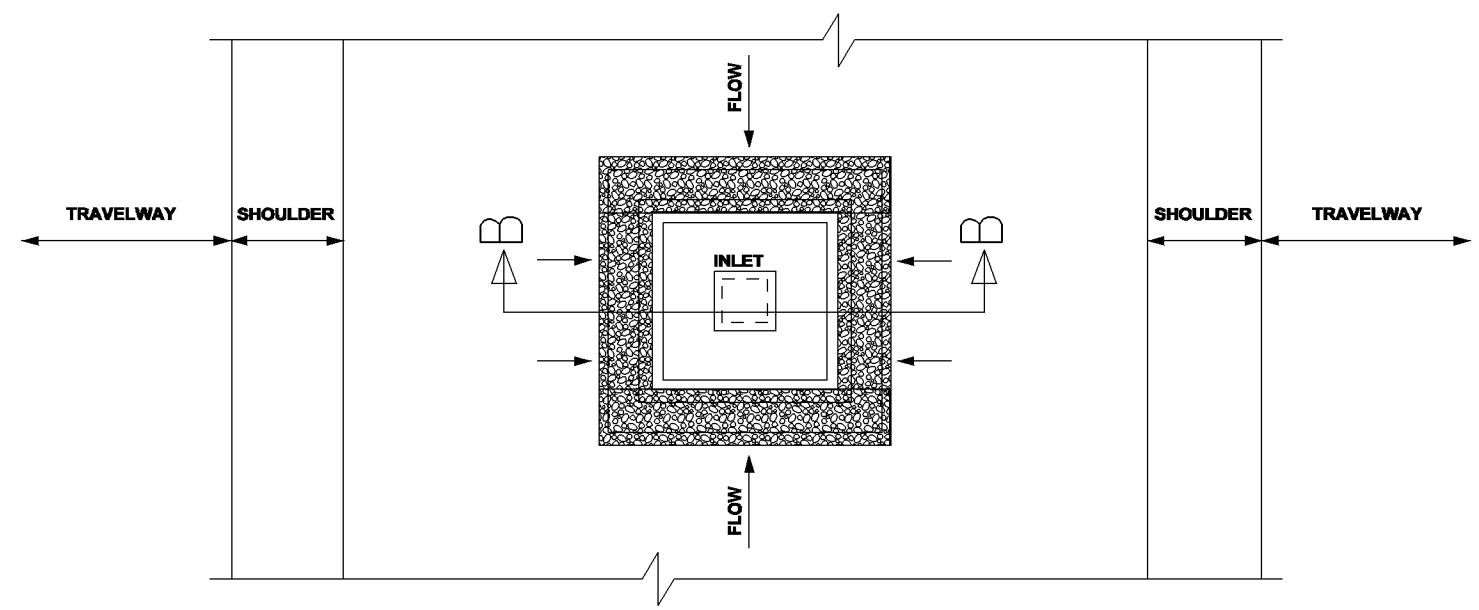

PLAN - IN SAG

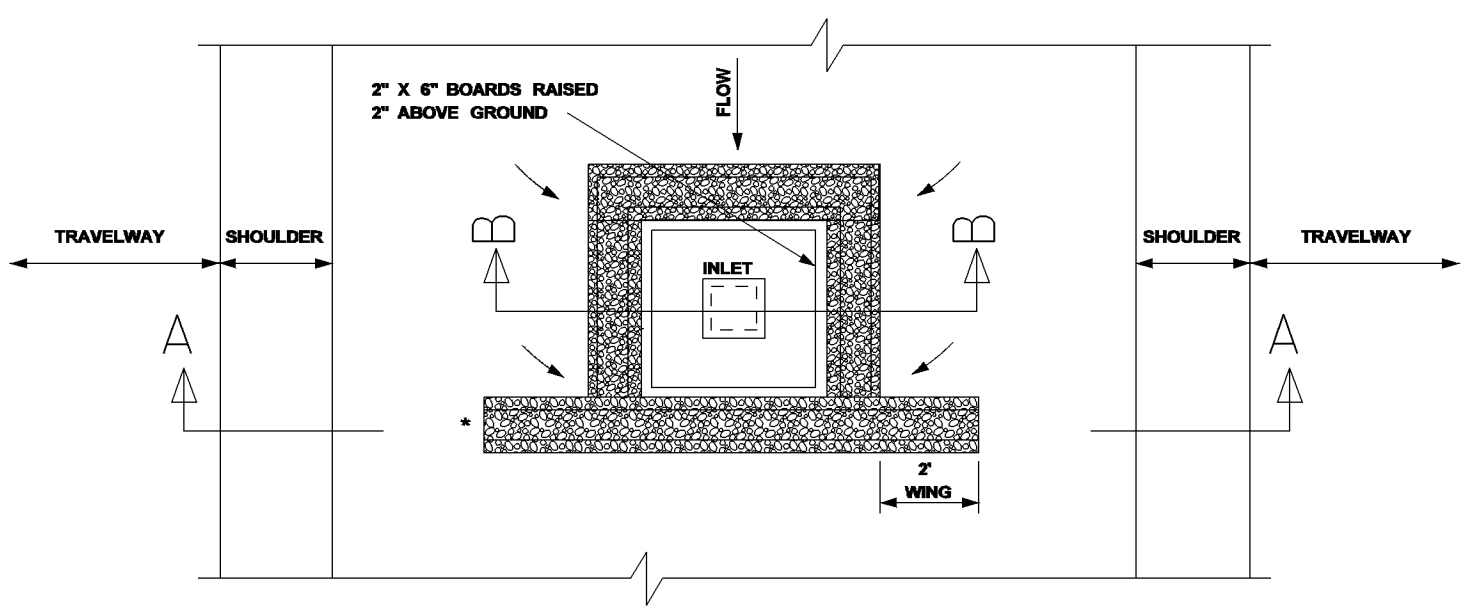

PLAN - ON GRADE

* CONSTRUCT WINGS TO PREVENT BYPASS

DATE	REVISION	BY

MISSISSIPPI DEPARTMENT OF TRANSPORTATION

INLET PROTECTION
DETAILS FOR COARSE AGGREGATE
ON GRADES & SAGS

WORKING NUMBER ECD-11

SHEET NUMBER

FILENAME: EROSION CONTRL\ECD-11.DGN

DESIGN TEAM _____ CHECKED _____ DATE _____

PLAN
ROADWAY DESIGN DIVISION
MISSISSIPPI DEPARTMENT OF TRANSPORTATION

378

1/19/2010 12:25PM ECD-11.DGN

STATE	PROJECT NO.
MISS.	

NOTE:
SILT FENCE OR SAND BAGS MAY ALSO BE USED FOR THIS APPLICATION.
HAY BALES NOT ACCEPTABLE DURING THIS STAGE.

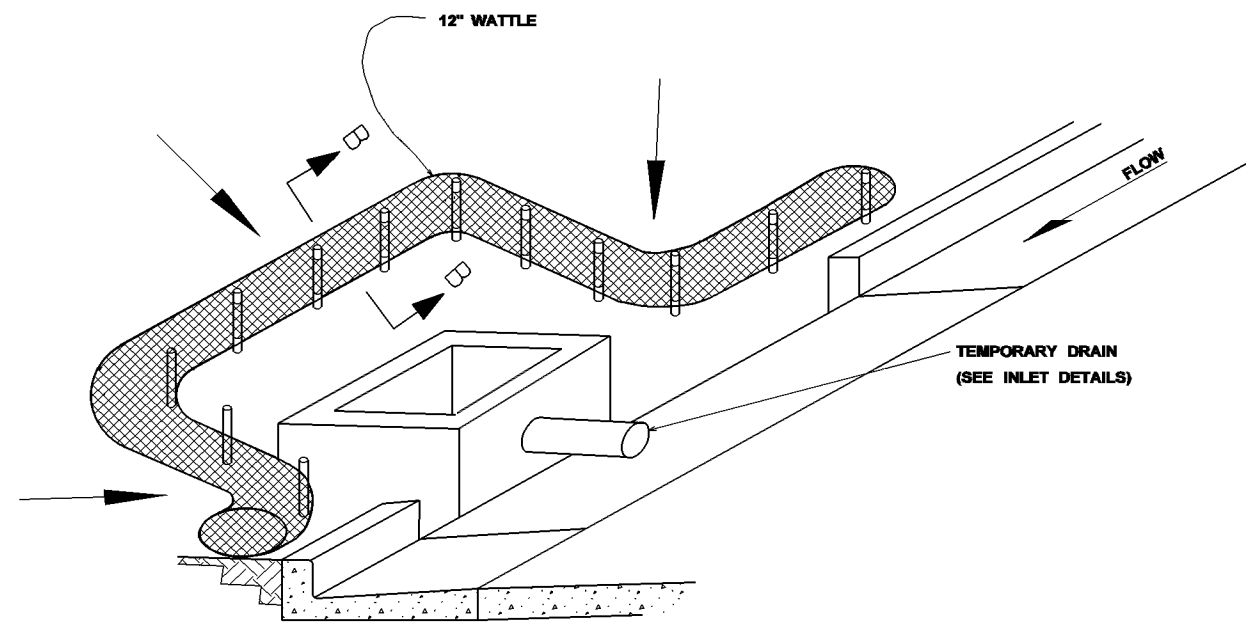

CURB INLET PROTECTION (STAGE 2)

SINGLE OR DOUBLE WING INLET

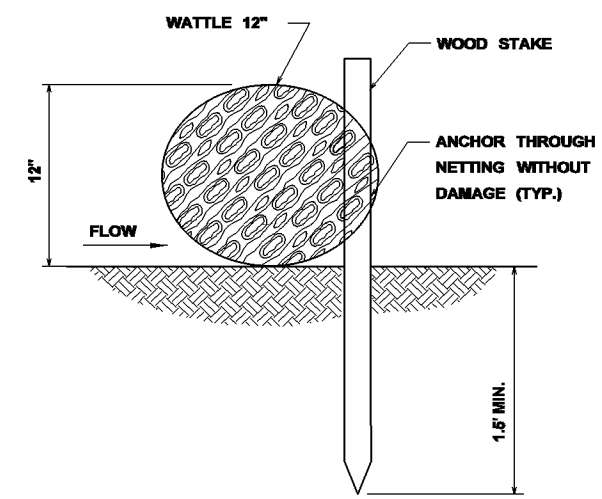

SECTION B-B

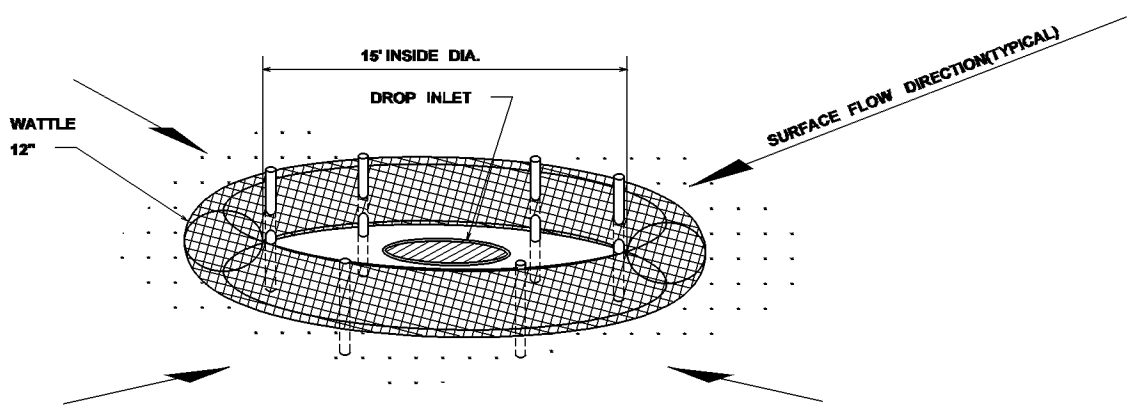

DROP INLET PROTECTION

NOTES:

1. ANCHORING STAKES SHALL BE SIZED, SPACED, AND BE OF A MATERIAL THAT EFFECTIVELY SECURES THE WATTLE. STAKE SPACING SHALL BE A MAXIMUM OF THREE FEET.
2. OVERLAP ENDS OF WATTLES PER MANUFACTURERS RECOMMENDATIONS (1'MIN.,3'MAX.).
3. TRENCHING OF WATTLES MAY BE NECESSARY IF PIPING BECOMES EVIDENT.

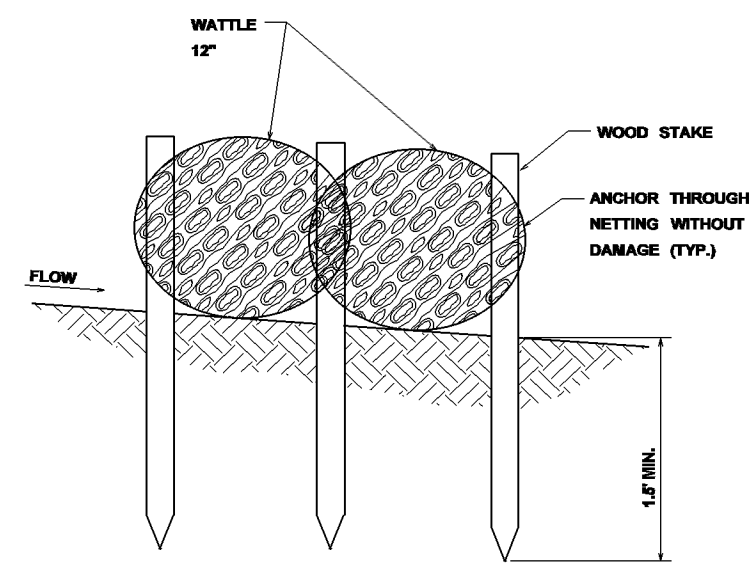

SECTION A-A

DATE	REVISION	BY

MISSISSIPPI DEPARTMENT OF TRANSPORTATION

INLET PROTECTION DETAILS
OF WATTLES

FILENAME: EROSION CONTROL\ECD-12.DGN
DESIGN TEAM ____ CHECKED ____ DATE ____

WORKING NUMBER
ECD-12
SHEET NUMBER

PLAN
ROADWAY DESIGN DIVISION
MISSISSIPPI DEPARTMENT OF TRANSPORTATION
1/19/2010 12:26PM ECD-12.DGN

STATE	PROJECT NO.
MISS.	

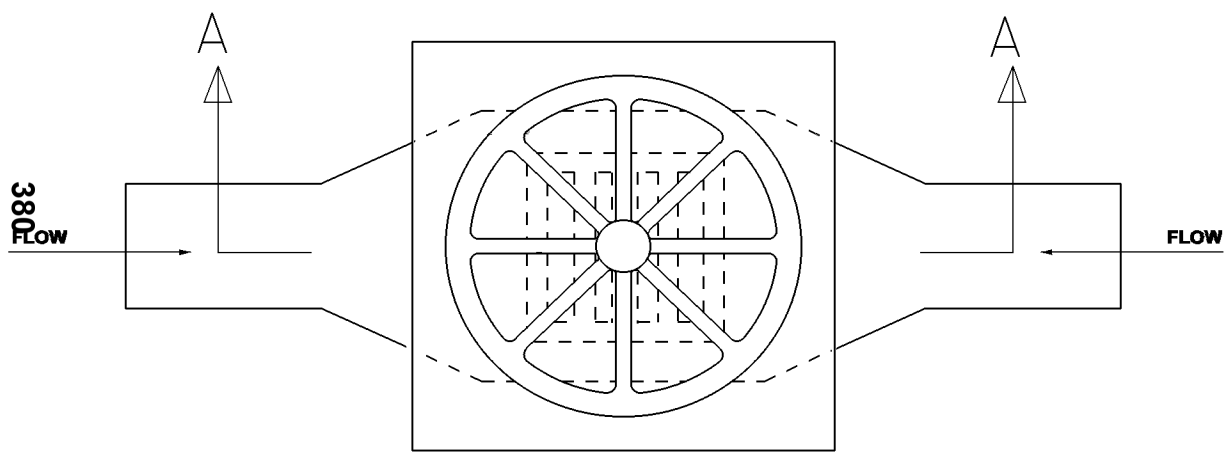

PLAN

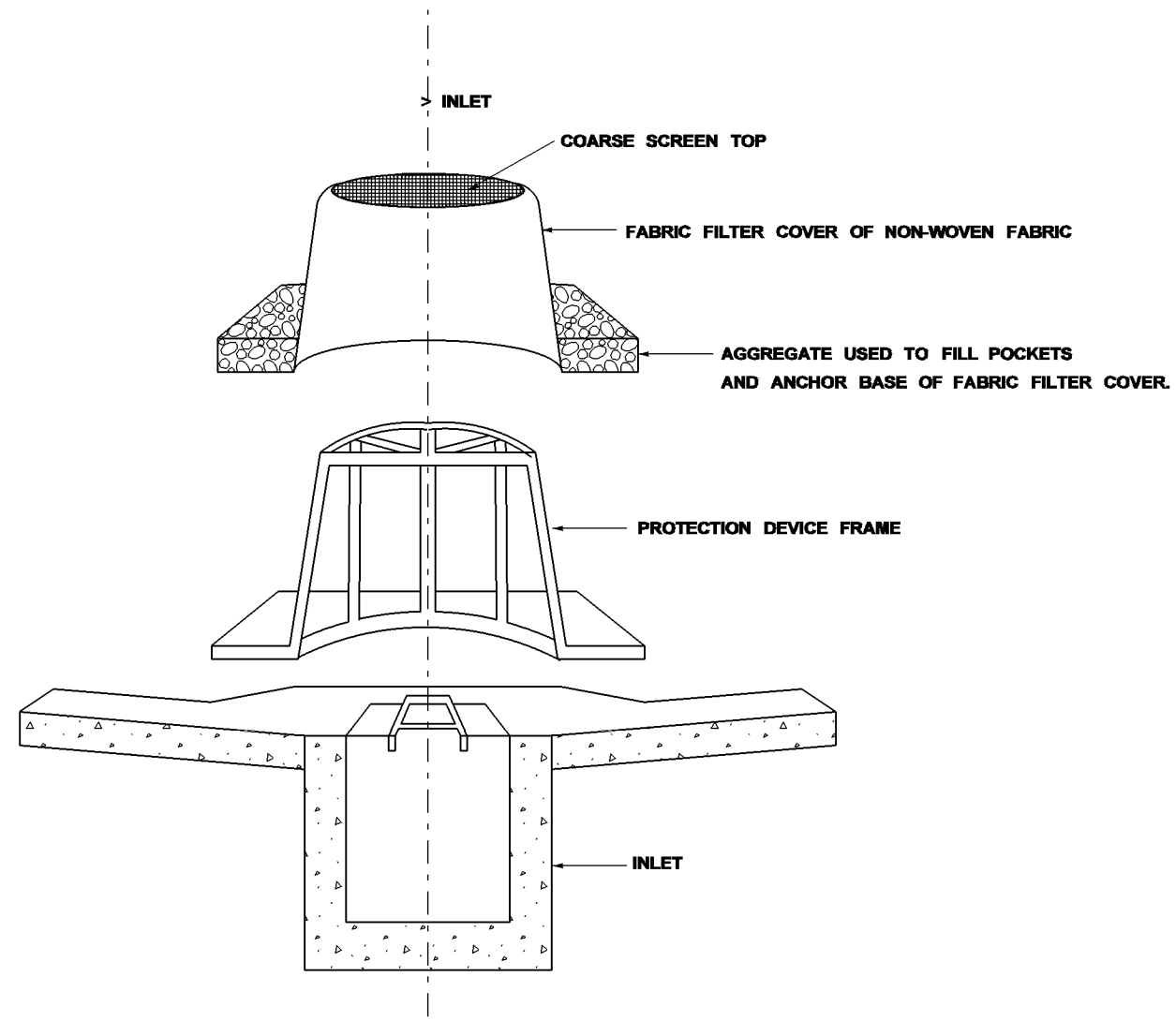

SECTION "A-A"

NOTES:

1. FRAMES WITH EITHER SQUARE OR CIRCULAR BASES MAY BE USED. SELECTED FRAME BASE SHOULD PROVIDE BEST SEAL AROUND INLET AS DIRECTED BY THE ENGINEER.
2. FILL POCKETS AROUND BASE OF FILTER COVER WITH #57 STONE OR SOIL. STONE IS REQUIRED WHEN ANCHORING THE MANUFACTURED INLET PROTECTION DEVICE OVER PAVED DITCH OR FLUME.
3. USE ONLY DURING STAGE 3 OR STAGE 4 INLET CONSTRUCTION.
4. FOR MEDIAN INLET PROTECTION, THE ELEVATION OF THE COARSE SCREEN TOP SHOULD BE A MINIMUM OF 6" BELOW THE ELEVATION OF THE OUTSIDE EDGE OF THE INSIDE SHOULDER.

DATE	REVISION	BY

MISSISSIPPI DEPARTMENT OF TRANSPORTATION

INLET PROTECTION
DETAILS OF MANUFACTURED
INLET PROTECTION DEVICE

WORKING NUMBER
ECD-13

SHEET NUMBER

FILENAME: EROSION CONTROL\ECD-13.DGN

DESIGN TEAM _____ CHECKED _____ DATE _____

PLAN
ROADWAY DESIGN DIVISION
MISSISSIPPI DEPARTMENT OF TRANSPORTATION

1/20/2010 9:32 AM ECD-13.DGN

STATE	PROJECT NO.
MISS.	

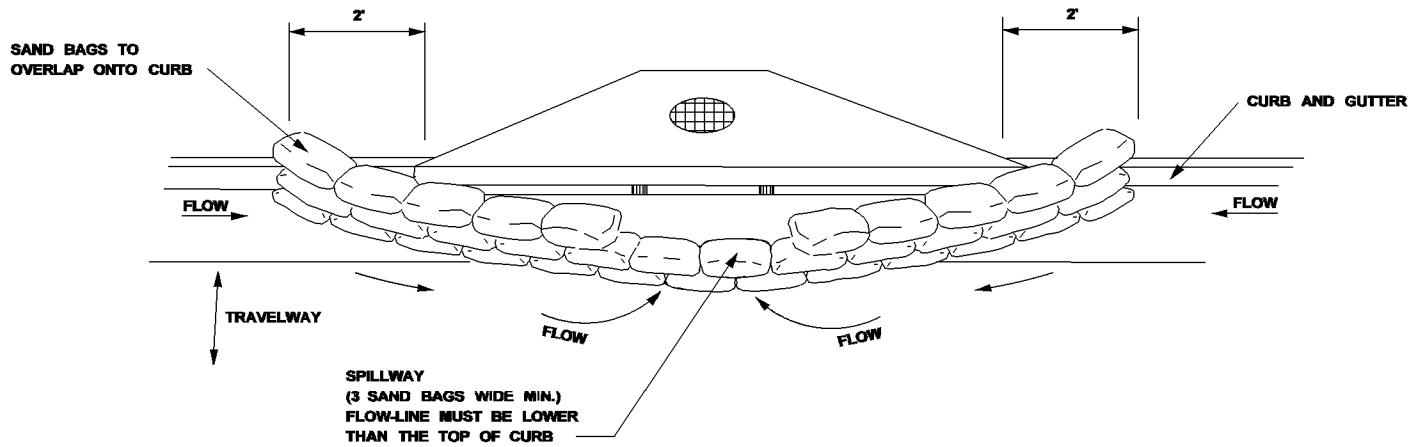

TYPICAL (SAND BAG) PROTECTION FOR INLET IN SAG

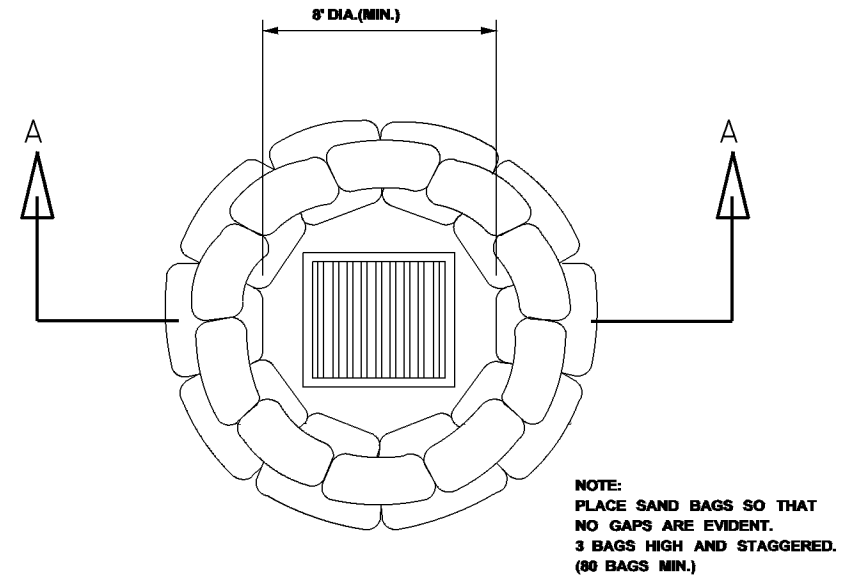

DROP INLET
PLAN VIEW

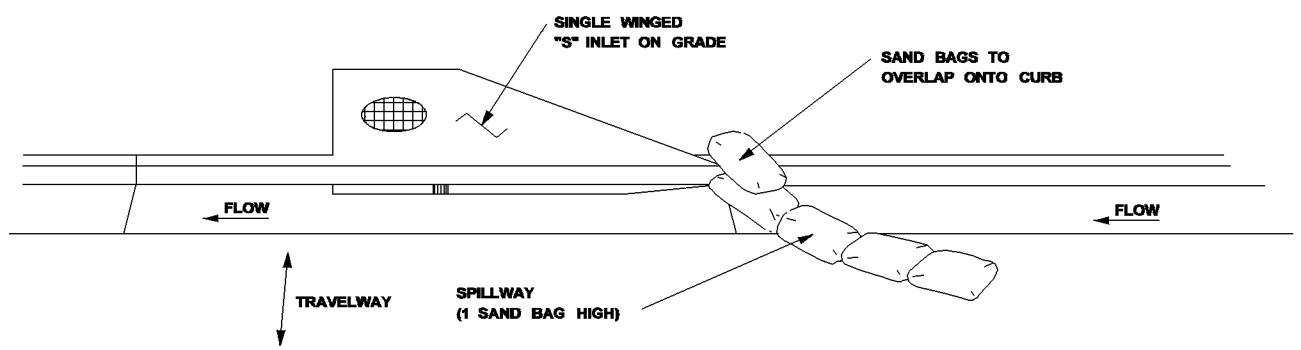

TYPICAL (SAND BAG) PROTECTION FOR INLET ON GRADE

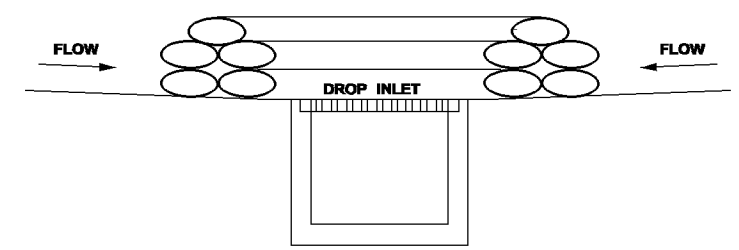

SECTION A-A
SAND BAG BARRIER

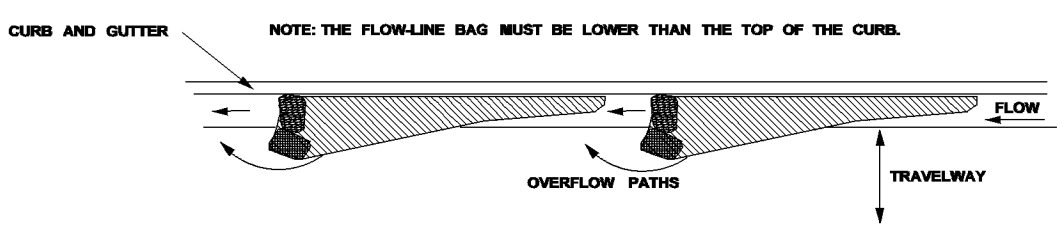

CURB AND GUTTER SEDIMENT
CONTAINMENT SYSTEM

CURB INLET PROTECTION NOTES:

1. THIS CURB INLET PROTECTION METHOD CAN BE USED DURING ANY STAGE OF BASE AND PAVEMENT CONSTRUCTION.
2. BAG HEIGHT AND NUMBER OF BAGS SHOULD BE BASED ON CURB HEIGHT AND USE OF TRAVELWAY.
3. SEDIMENT SHOULD BE CONTROLLED PRIOR TO ENTERING GUTTER. GUTTER CHECKS AND INLET PROTECTION ARE FOR SECONDARY CONTROL.
4. REMOVE ACCUMULATED SEDIMENT AFTER EVERY RAINFALL. SWEEP SEDIMENT FROM HARD SURFACES AND DISPOSE OF APPROPRIATELY AWAY FROM INLETS AND/OR WATER BODIES.
5. IF DENUDED AREAS EXIST BEHIND THE INLET, A SEDIMENT BARRIER SHOULD BE INSTALLED AROUND IT'S PERIMETER TO CONTROL SEDIMENT.

REVISION	BY	MISSISSIPPI DEPARTMENT OF TRANSPORTATION INLET PROTECTION DETAILS OF SAND BAG	WORKING NUMBER ECD-14
DATE		FILENAME: EROSION CONTROL\ECD-14.DGN DESIGN TEAM ____ CHECKED ____ DATE ____	SHEET NUMBER

PLAN
ROADWAY DESIGN DIVISION
MISSISSIPPI DEPARTMENT OF TRANSPORTATION
1/20/2010 9:33 AM ECD-14.DGN

STATE	PROJECT NO.
MISS.	

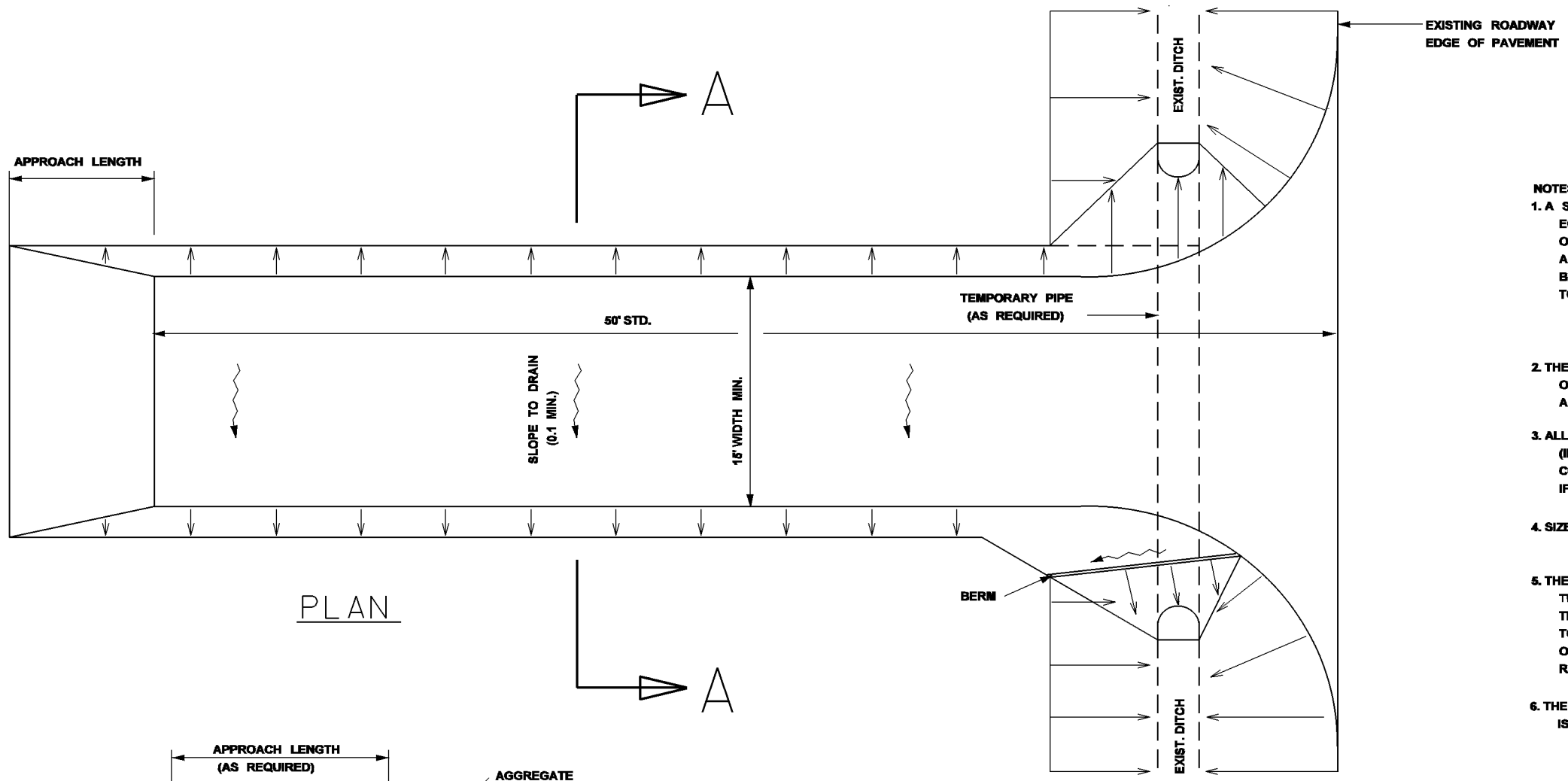

PLAN

NOTES:

1. A STABILIZED CONSTRUCTION ENTRANCE SHALL BE CONSTRUCTED AT POINTS OF EGRESS FROM UNSTABILIZED AREAS OF THE PROJECT TO PUBLIC ROADS WHERE OFFSITE TRACKING OF MUD COULD OCCUR. TRAFFIC FROM UNSTABILIZED AREAS OF THE PROJECT SHALL BE DIRECTED THRU THE STABILIZED ENTRANCE. BARRIERS, FLAGGING, OR OTHER POSITIVE MEANS SHALL BE USED AS REQUIRED TO LIMIT AND DIRECT VEHICULAR EGRESS ACROSS THE STABILIZED ENTRANCE.

2. THE CONTRACTOR MAY PROPOSE AN ALTERNATIVE TECHNIQUE TO MINIMIZE OFFSITE TRACKING OF SEDIMENT. THE ALTERNATIVE MUST BE REVIEWED AND APPROVED BY THE ENGINEER PRIOR TO IT'S USE.

3. ALL MATERIALS SPILLED, DROPPED, OR TRACKED ONTO PUBLIC ROADS (INCLUDING THE STABILIZED CONSTRUCTION ENTRANCE AGGREGATE AND CONSTRUCTION MUD) SHALL BE REMOVED DAILY, OR MORE FREQUENTLY IF SO DIRECTED BY THE ENGINEER.

4. SIZE 1 STABILIZER AGGREGATE SHALL BE USED

5. THE STABILIZED CONSTRUCTION ENTRANCE SHALL BE MAINTAINED IN A CONDITION THAT WILL ALLOW IT TO PERFORM IT'S FUNCTION TO PREVENT OFFSITE TRACKING, THE STABILIZED CONSTRUCTION ENTRANCE SHALL BE RINSED WHEN NECESSARY TO MOVE ACCUMULATED MUD DOWNWARD THRU THE STONE. ADDITIONAL STABILIZATION OF THE VEHICULAR ROUTE LEADING TO THE STABILIZED ENTRANCE MAY BE REQUIRED TO LIMIT THE MUD TRACKED.

6. THE NOMINAL SIZE OF A STANDARD STABILIZED CONSTRUCTION ENTRANCE IS 15' X 50' UNLESS OTHERWISE SHOWN IN THE EROSION CONTROL PLAN

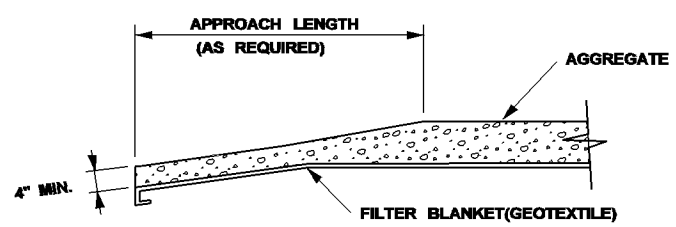

TRANSITION DETAIL

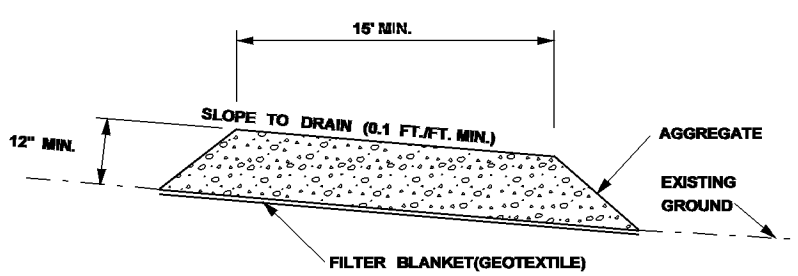

SECTION A-A

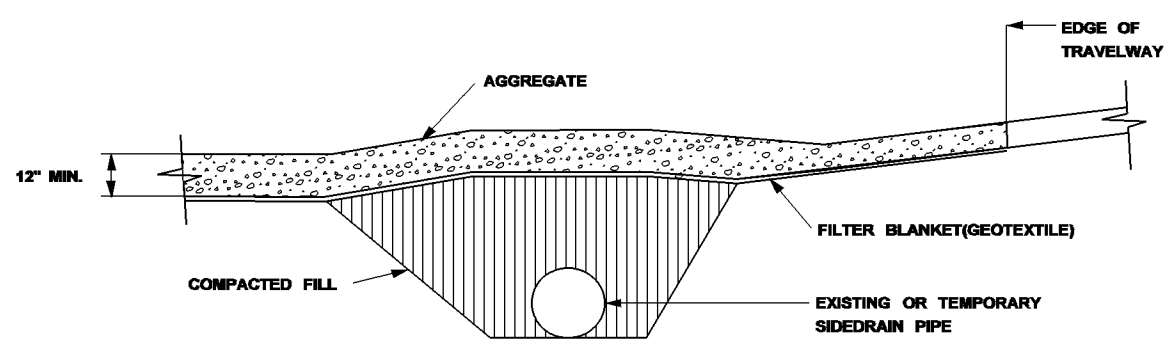

RURAL CONNECTION DETAIL

REVISION	BY	MISSISSIPPI DEPARTMENT OF TRANSPORTATION STABILIZED CONSTRUCTION ENTRANCE	WORKING NUMBER ECD-15
DATE		FILENAME: EROSION CONTROL\ECD-15.DGN DESIGN TEAM_____ CHECKED_____ DATE_____	SHEET NUMBER

STATE	PROJECT NO.
MISS.	

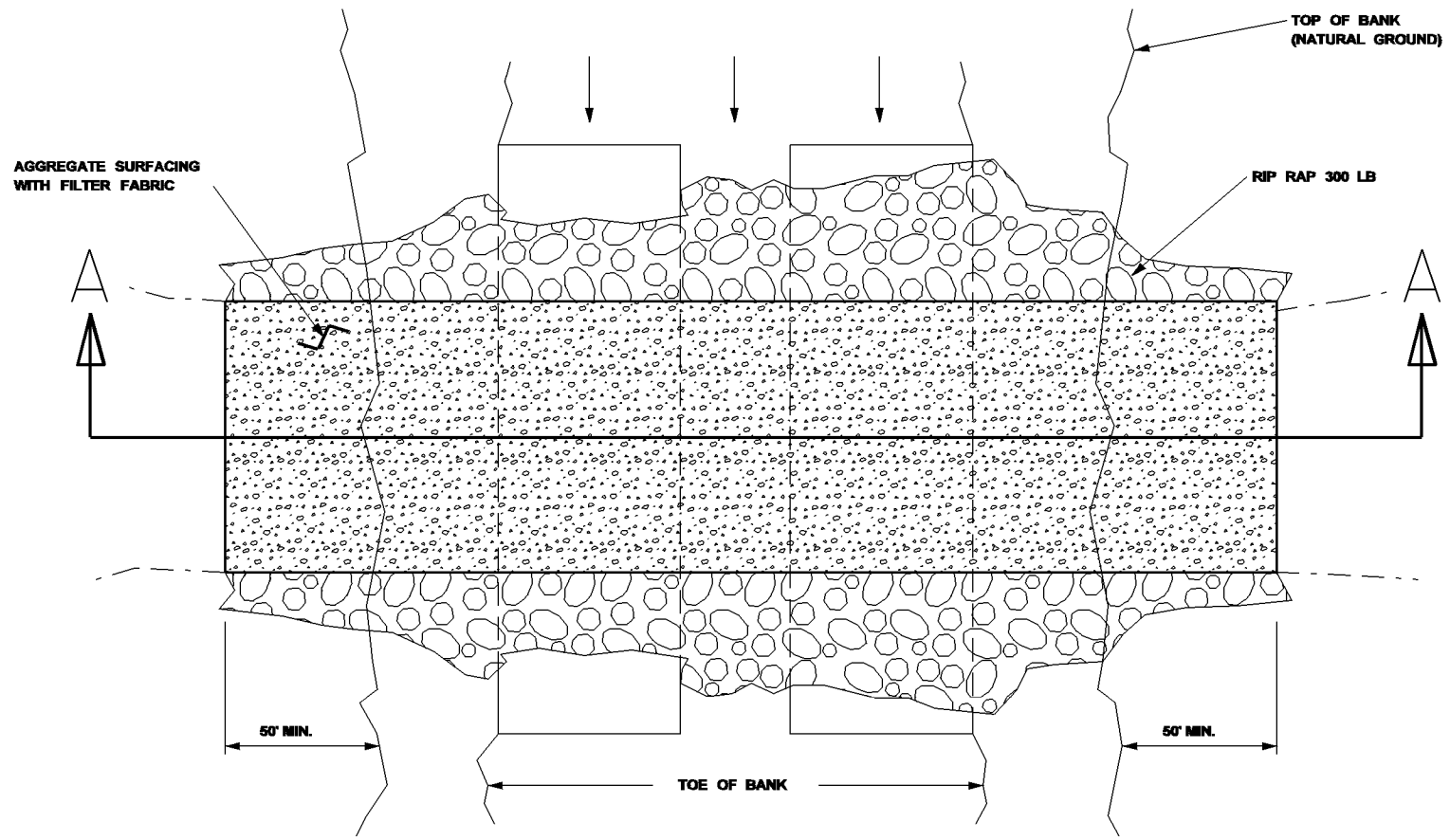

PLAN VIEW

TEMPORARY CULVERT STREAM CROSSING

NOTES:

1. TEMPORARY CULVERT STREAM CROSSINGS PROVIDE A MEANS FOR VEHICLES AND EQUIPMENT TO SAFELY CROSS A WATERCOURSE WHILE MINIMIZING DAMAGE TO THE CHANNEL AND/OR BANKS.

2. TEMPORARY CULVERT STREAM CROSSINGS, WHEN PERMITTED BY THE ENGINEER, SHALL BE CONSTRUCTED TO SAFELY PASS EXPECTED MEAN WATER FLOW OF THE STREAM FOR THE TIME OF YEAR AND LENGTH OF TIME THAT THEY ARE INSTALLED.

3. TEMPORARY STREAM CROSSINGS SHALL BE DESIGNED TO ENSURE STRUCTURAL INTEGRITY AND STABILITY, AND MAINTAIN NORMAL DOWNSTREAM FLOWS. THE USE OF INSTREAM CROSSINGS AND INSTREAM AGGREGATE FILL SHALL BE MINIMIZED TO THE EXTENT PRACTICABLE.

4. A CONTINUOUS PROGRAM OF EFFECTIVE EROSION AND SEDIMENT CONTROL MEASURES SHALL BE IMPLEMENTED PRIOR TO AND CONCURRENT WITH ANY TYPE OF CONSTRUCTION ACTIVITY WITHIN THE BANKS OF A STREAM. WHEN A CROSSING IS NO LONGER NEEDED, THE STREAMBED AND STREAM BANKS SHALL BE RESTORED TO PRE-DISTURBANCE CONDITIONS, OR SUCH A CONDITION THAT PROVIDES SUBSTANTIALLY EQUIVALENT PROTECTION OF WATER QUALITY.

5. LOCATIONS OR TYPES OF TEMPORARY CULVERT STREAM CROSSINGS WILL NOT BE SHOWN ON THE PLANS AS REQUIRED ITEMS .

6. THE CONTRACTOR MAY PROPOSE OTHER OPTIONS FOR TEMPORARY STREAM CROSSINGS SUCH AS STEEL/TIMBER BRIDGE OR MATS.

7. THE DETAILS PROVIDED DEPICT A TYPICAL TEMPORARY CULVERT STREAM CROSSING.

8. TEMPORARY STREAM CROSSINGS WILL NOT BE MEASURED FOR SEPERATE PAYMENT. ALL COSTS FOR MATERIALS, LABOR, EQUIPMENT, CONSTRUCTION, REMOVAL AND MAINTENANCE SHALL BE ABSORBED IN OTHER ITEMS OF WORK

TEMPORARY CULVERT STREAM CROSSING

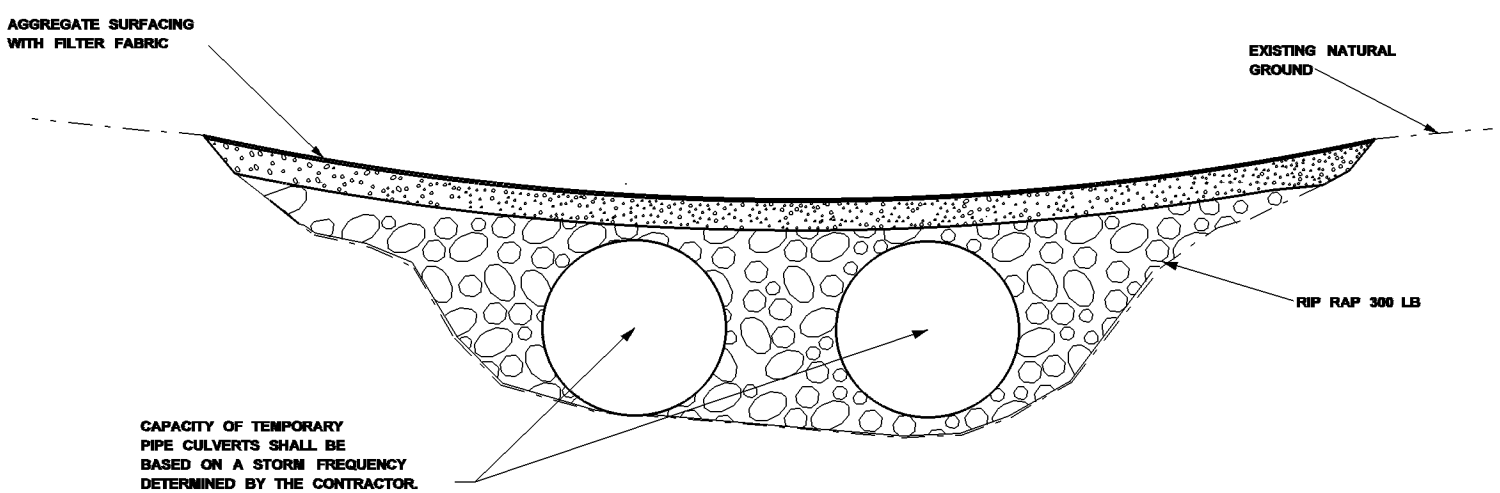

SECTION A-A

REVISION	BY	MISSISSIPPI DEPARTMENT OF TRANSPORTATION TEMPORARY CULVERT STREAM CROSSING	WORKING NUMBER ECD-16
DATE		FILENAME: EROSION CONTROL\ECD-16.DGN DESIGN TEAM ____ CHECKED ____ DATE ____	SHEET NUMBER

PLAN
ROADWAY DESIGN DIVISION
MISSISSIPPI DEPARTMENT OF TRANSPORTATION
1/20/2010 9:34 AM ECD-16.DGN

STATE	PROJECT NO.
MISS.	

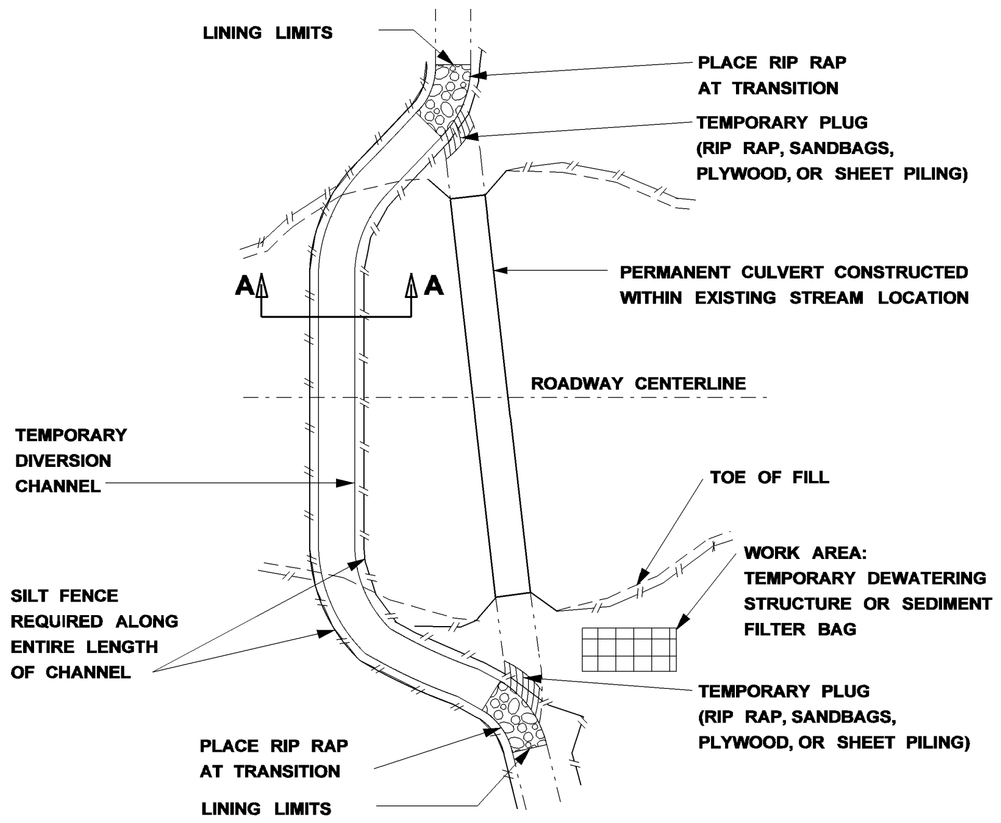

CULVERT CONSTRUCTED WITHIN EXISTING STREAM

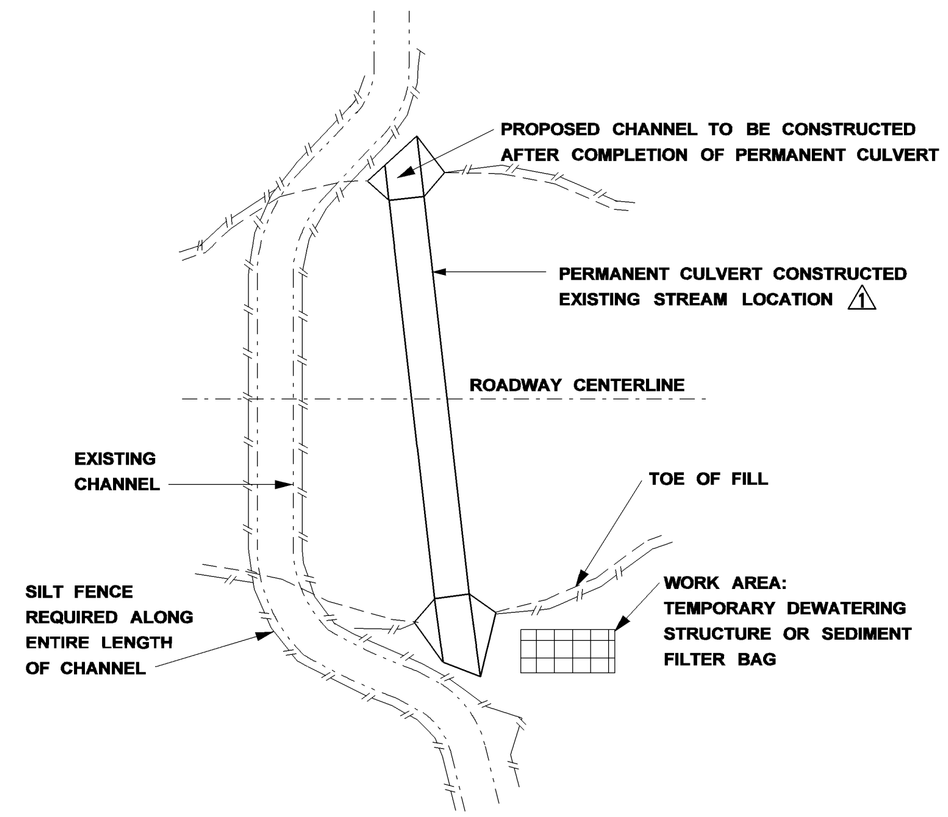

CULVERT CONSTRUCTED OUTSIDE EXISTING STREAM

NOTES:

1. TEMPORARY DIVERSION CHANNELS MAY BE USED TO DIVERT NORMAL STREAM PATH FLOW FROM AN ERODIBLE AREA UNTIL SUCH AREAS CAN BE STABILIZED.
2. TYPE III FILTER FABRIC OR PRE-FAB DITCH LINER MAY BE USED FOR CHANNEL LINING.
3. RIP-RAP WITH FILTER FABRIC MAY BE USED FOR CHANNEL FLOW VELOCITIES OF 3.0 FPS TO 9.0 FPS. THE RIP-RAP SHALL BE SIZED 300 LB
4. LOCATIONS OR TYPES OF TEMPORARY DIVERSION WILL NOT BE SHOWN ON THE PLANS
5. DIVERSION CHANNEL SHALL BE STABILIZED AND INSPECTED BY THE ENGINEER BEFORE FLOW IS DIVERTED.
6. DURING CONSTRUCTION OF DIVERSION CHANNEL, DAMAGE TO THE EXISTING STREAM, CANOPY REMOVAL, AND DEPTH OF THE CHANNEL CONSTRUCTION SHALL BE MINIMIZED.
7. CONSTRUCTION OF THE CHANNEL RELOCATIONS AND CULVERTS SHALL PROCEED AS FOLLOWS: 7.1. CONSTRUCT A MEANDERING TEMPORARY CHANNEL CHANGE ADJACENT TO THE PROPOSED CULVERT TO DIVERT WATER TEMPORARILY DURING THE CULVERT CONSTRUCTION. TEMPORARY EROSION CONTROL MEASURES SHALL BE INSTALLED IN ACCORDANCE WITH THE STANDARD SPECIFICATIONS.
   - 7.2. RELOCATE CHANNEL AND CONSTRUCT CULVERT SIMULTANEOUSLY.
   - 7.3. SOD AND/OR RIP-RAP RECONSTRUCTED BANKS AT TRANSITIONS. THE UPPER CHANNEL PLUG IS TO REMAIN IN PLACE UNTIL SUBNOTE (7.1) THROUGH (7.4) UNDER THIS HEADING ARE COMPLETED TO INSURE THAT ALL CONSTRUCTION IS IN THE DRY.
   - 7.4. IF AN EARTH PLUG IS NECESSARY AT THE DOWNSTREAM END OF THE CHANNEL IT SHOULD BE REMOVED FIRST, THEN REMOVE THE UPPER PLUG TO RELEASE WATER INTO THE RECONSTRUCTED CHANNEL.
   - 7.5 PLUGS SHOULD REMAIN IN PLACE UNTIL PERMANENT STABILIZATION OF THE NEW WATER COURSE IS COMPLETED. REMOVAL OF PLUGS SHOULD ONLY BE PERFORMED FOLLOWING ACCEPTANCE OF ALL STABILIZATION WORK BY THE ENGINEER.
8. THE DETAILS PROVIDED DEPICT TYPICAL TEMPORARY DIVERSION CHANNELS.
9. THE CONTRACTOR MAY PROPOSE THE USE OF OTHER DIVERSION OPTIONS SUCH AS PIPING, PUMPING OR STAGED CONSTRUCTION.
10. THE EFFECTIVE AREA OF FLOW IN THE TEMPORARY CHANNEL OR CULVERT SHALL BE AT LEAST ONE-HALF THAT OF THE EXISTING STRUCTURE.

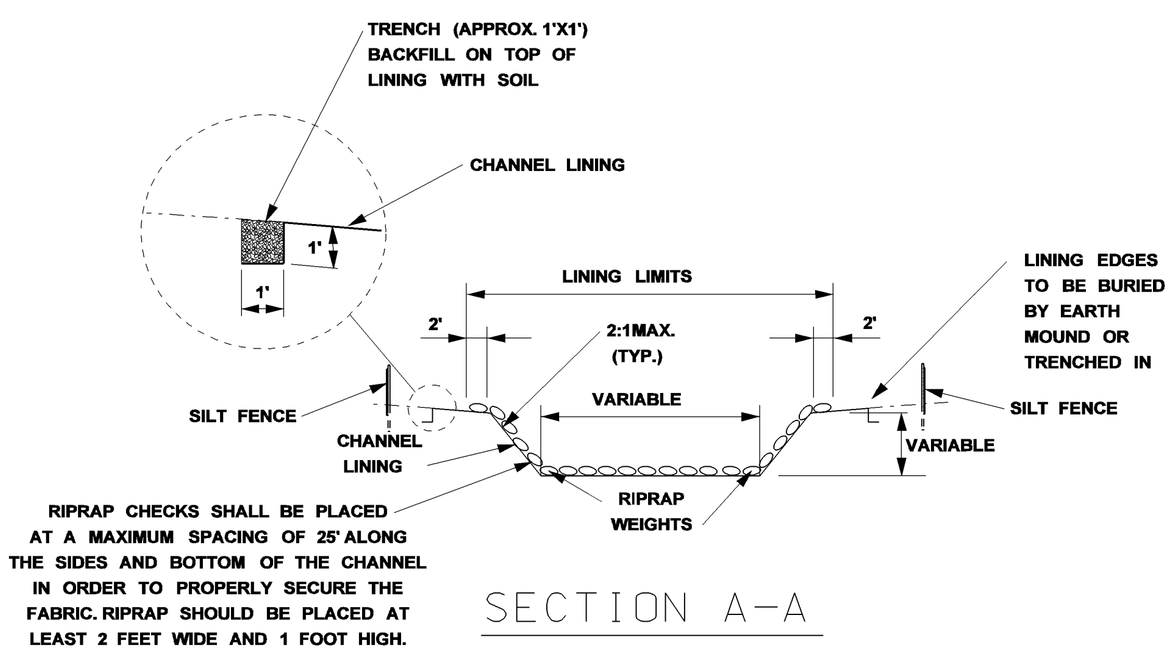

SECTION A-A

TEMPORARY DIVERSION CHANNEL WITH GEOTEXTILE FABRIC

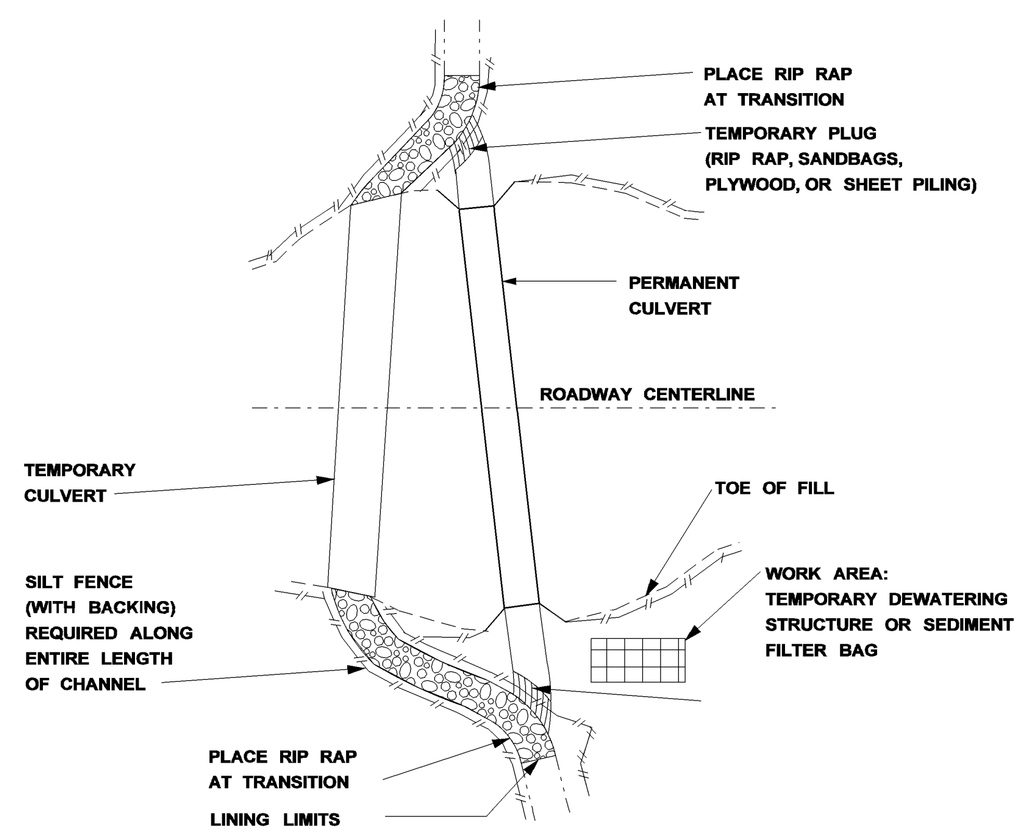

TEMPORARY CULVERT USED DURING CONSTRUCTION

DATE	REVISION	BY
08/16/10	revised text	JSS

MISSISSIPPI DEPARTMENT OF TRANSPORTATION

TEMPORARY STREAM DIVERSION

WORKING NUMBER ECD-17

SHEET NUMBER

FILENAME: EROSION CONTROL\ECD-17.DGN

DESIGN TEAM ____ CHECKED ____ DATE ____

MISSISSIPPI DEPARTMENT OF TRANSPORTATION ROADWAY DESIGN DIVISION

8/16/2010 9:19 AM ECD-17.DGN

STATE	PROJECT NO.
MISS.	

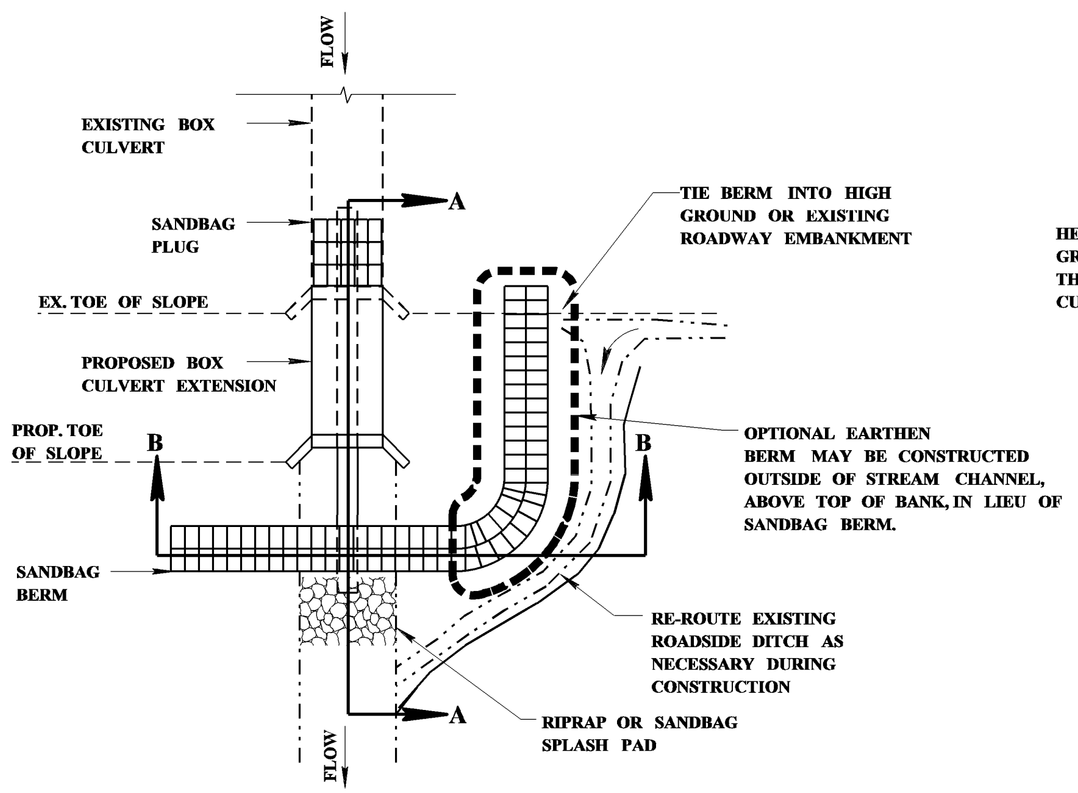

PLAN VIEW

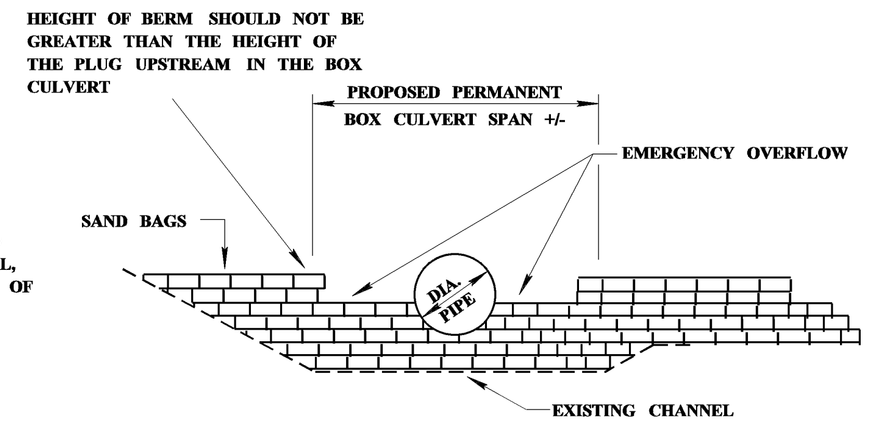

SECTION B-B

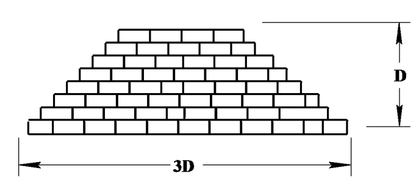

SAND BAG PLUG & BERM CROSS SECTION

(SEE NOTE 4)

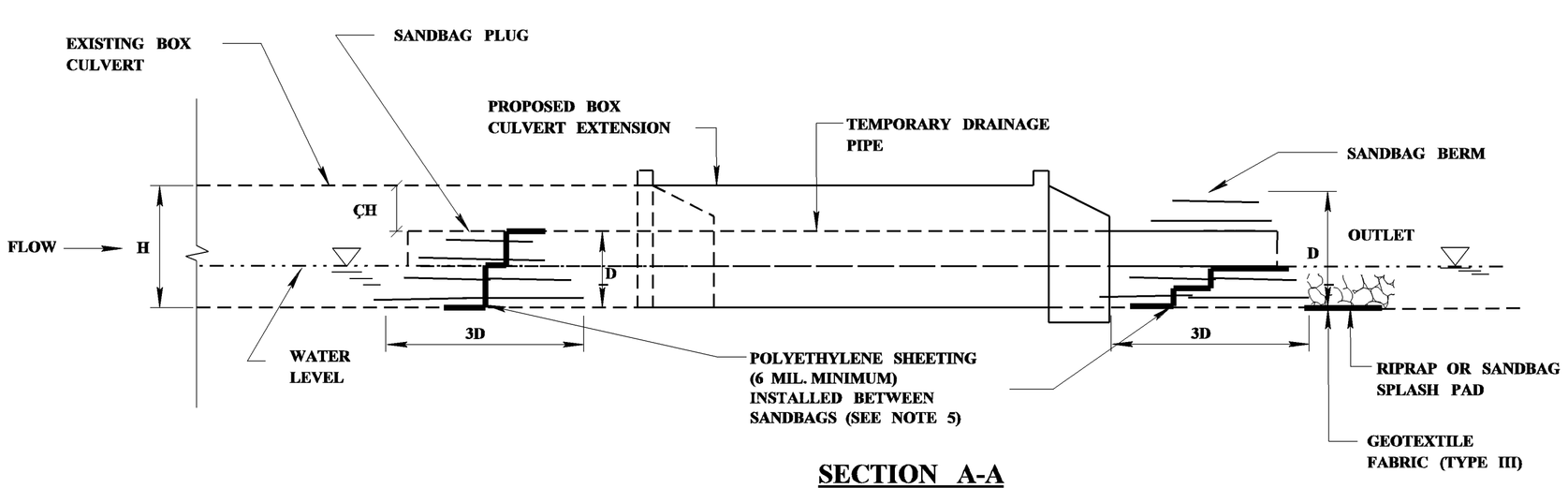

SECTION A-A

MAXIMUM SPAN FOR PIPE SUPPORTS, FEET

DIAMETER OF PIPE (IN.)	STEEL THICKNESS (IN.)				
	0.064	0.079	0.109	0.138	0.168
	2" x 1/2" CORRUGATION				
24	13	15	20		
36	12	15	20	25	
48	11	14	19	25	30
60		14	19	24	29
72			18	24	29
	5" X 1" OR 3" X 1" CORRUGATION				
36	9	11			
48	9	11	15		
60	8	10	14	18	
72	8	10	14	18	22

FOR PIPE SIZES NOT SHOWN REFER TO NEXT LARGER SIZE

GENERAL NOTES

1 SUSPENDED PIPE DIVERSIONS MAY BE USED TO ALLOW BOX CULVERT EXTENSIONS TO BE CONSTRUCTED, WHILE SEPARATED FROM FLOWING WATER, THUS REDUCING SEDIMENTATION. OPTIONAL FLEXIBLE PIPE DIVERSION MAY BE UTILIZED ON STREAMS WITH INTERMITTENT FLOW WHERE THE DURATION OF CONSTRUCTION IS EXPECTED TO BE BRIEF.

2 EXCAVATION SLOPES FOR BOX CULVERT EXTENSIONS SHALL BE PROTECTED WITH TYPE III FILTER FABRIC PRIOR TO CONSTRUCTION OF THE BOX.

3 SUSPENDED PIPE DIVERSIONS MAY BE USED WHERE ADVERSE IMPACTS WILL NOT BE CAUSED BY WATER PONDED UPSTREAM OF THE PIPE.

4 THE SANDBAG PLUG AT THE UPSTREAM END OF THE SUSPENDED PIPE DIVERSION SHOULD BE CONSTRUCTED TO A HEIGHT EQUAL TO THREE QUARTERS OF THE RISE OF THE BOX CULVERT.

5 POLYETHYLENE SHEETING (6 MIL. MINIMUM) SHALL BE PLACED INSIDE THE SANDBAG PLUG IN THE BOX CULVERT AND IN THE SAND BAG BERM WITHIN THE CHANNEL IN ORDER TO PROVIDE THE BEST POSSIBLE SEAL. SANDBAGS ON THE DOWNSTREAM SIDE OF THE SHEETING SHOULD BE PLACED FIRST, AND THEN SHEETING PLACED ON THESE BAGS. AS MUCH AS POSSIBLE, THE SHEETING SHOULD BE FITTED AROUND THE PIPE. THE REMAINING SANDBAGS WOULD THEN BE PLACED ON THE SHEETING. WHERE MULTIPLE SHEETS ARE USED, THEY SHOULD OVERLAP A MINIMUM OF 18 INCHES.

6 THE PROPOSED CULVERT CONSTRUCTION SHALL BE SEALED FROM THE EXISTING STREAM BY MEANS OF A SANDBAG BERM WHICH SHOULD BE AT THE SAME HEIGHT AS THE PLUG INSIDE THE BOX CULVERT. THIS BERM SHALL BE TIED INTO EITHER HIGH GROUND ADJACENT TO THE CHANNEL OR THE EXISTING ROADWAY EMBANKMENT. IT SHALL BE PROVIDED WITH A SPILLWAY EQUAL IN WIDTH TO THE BOX CULVERT AND AT A HEIGHT LOWER THAN THE REST OF THE BERM.

7 THE TEMPORARY DRAINAGE PIPE SHALL BE SUPPORTED AT ALL JOINTS AND AT INTERVALS NOT TO EXCEED MAXIMUM VALUES SPECIFIED IN THE TABLE "MINIMUM SPAN FOR SUPPORTS." SUPPORTS MAY CONSIST OF SANDBAGS, CONCRETE BLOCKS, WOODEN FRAMES, OR ANY OTHER MATERIAL SUFFICIENT TO SUPPORT THE WEIGHT OF THE PIPE WHEN IT IS FLOWING FULL. SUPPORTS AT JOINTS SHALL BE A MINIMUM OF 18 INCHES IN LENGTH, ALONG THE TEMPORARY DRAINAGE PIPE AND CENTERED ON THE JOINT. SUPPORTS SHOULD "CRADLE" THE TEMPORARY DRAINAGE PIPE TO ENSURE THAT IT WILL NOT ROLL DURING CONSTRUCTION OF THE BOX CULVERT.

8 ALL PIPE JOINTS SHALL BE PROPERLY BANDED OR OTHERWISE PROVIDED WITH A REASONABLE SEAL AGAINST LEAKAGE.

9 THE OPTIONAL FLEXIBLE PIPE DIVERSION USING PUMPS MAY BE USED AS AN ALTERNATE FOR SUSPENDED PIPE DIVERSIONS (UPSTREAM AND DOWNSTREAM).

10 CONSTRUCTION SHALL PROCEED AS FOLLOWS:
- 10A. INSTALL TEMPORARY DRAINAGE PIPE ON ITS SUPPORTS INSIDE THE CULVERT TO BE EXTENDED.
- 10B. CONSTRUCT THE SANDBAG PLUG AT THE UPSTREAM END OF THE SUSPENDED PIPE DIVERSION.
- 10C. CONSTRUCT THE SANDBAG BERM AT THE DOWNSTREAM END OF THE SUSPENDED PIPE DIVERSION.
- 10D. ONCE THE BOX CULVERT EXTENSION HAS BEEN COMPLETED, REMOVE THE DOWNSTREAM SANDBAG STRUCTURE, EXCEPT FOR THOSE BAGS NEEDED TO SUPPORT THE END OF THE PIPE. THE UPSTREAM SANDBAG STRUCTURE SHOULD THEN BE REMOVED GRADUALLY, IN ORDER TO ALLOW THE UPSTREAM WATER LEVEL TO DRAW DOWN AT A SAFE RATE.
- 10E. REMOVE THE TEMPORARY DRAINAGE PIPE, SUPPORTS AND ANY REMAINING SANDBAGS.

11 TEMPORARY DRAINAGE PIPE, SANDBAG PLUGS, BERMS, AND SUPPORTS SHALL BE INSPECTED WEEKLY OR AFTER EVERY RAIN EVENT. ANY NEEDED REPAIRS SHALL BE DONE IMMEDIATELY. ANY DEBRIS WHICH HAS ACCUMULATED AT THE INLET OF THE SUSPENDED PIPE DIVERSION SHALL BE IMMEDIATELY REMOVED.

12 RIP RAP MAY BE SUBSTITUTED FOR SAND BAGS

REVISION	BY	DATE

MISSISSIPPI DEPARTMENT OF TRANSPORTATION

TEMPORARY STREAM DIVERSION (BOX EXTENSIONS)

WORKING NUMBER ECD-18

SHEET NUMBER

FILENAME: EROSION CONTROL\ECD-18.DGN

DESIGN TEAM _____ CHECKED _____ DATE _____

ROADWAY DESIGN DIVISION
MISSISSIPPI DEPARTMENT OF TRANSPORTATION
386
1/28/2010 9:14 AM ECD-18.DGN

STATE	PROJECT NO.
MISS.	

FLOATING TURBIDITY CURTAIN

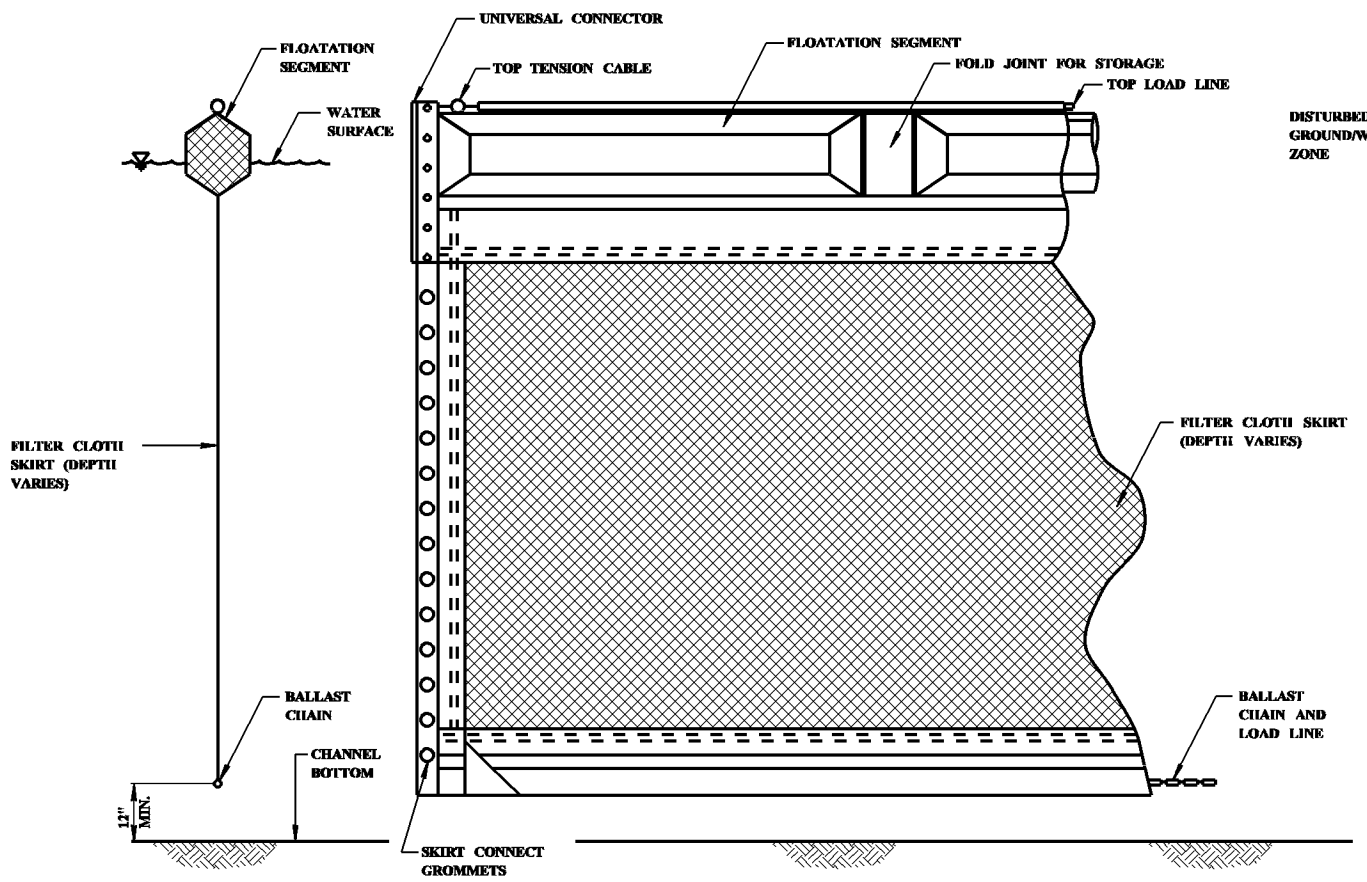

TYPICAL ANCHORING PLAN FOR SHORELINE/RIVER EDGE WORK

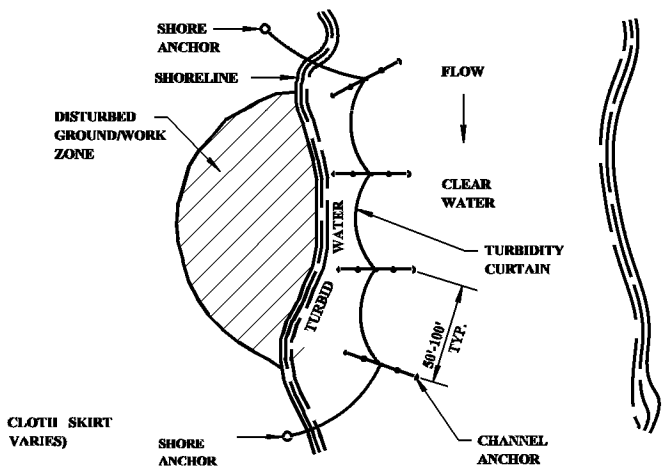

PLAN VIEW

TYPICAL ANCHORING PLAN FOR MID CHANNEL WORK (BRIDGE PIER, CAISSON, ETC.)

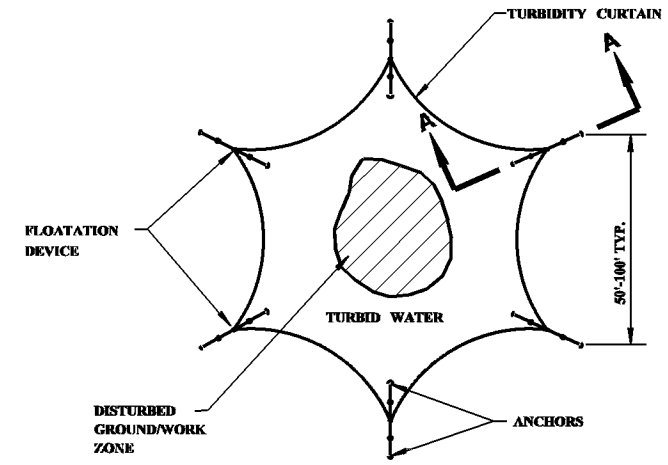

PLAN VIEW

TYPICAL ANCHORING SECTION

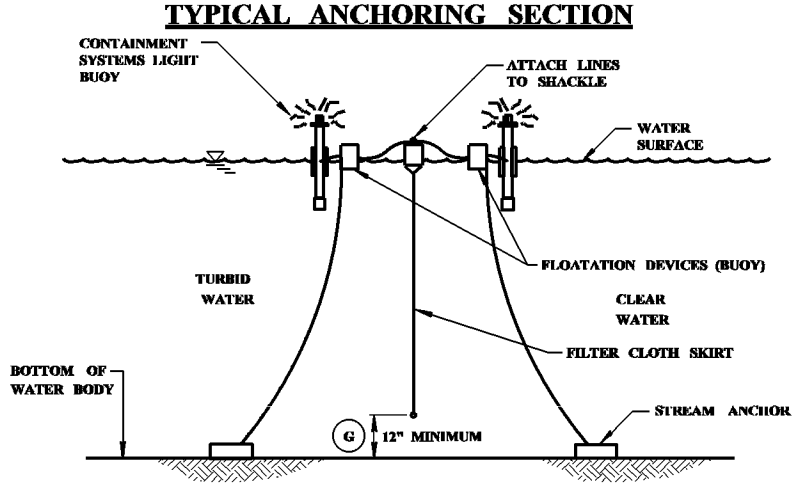

SECTION A-A

AUTOMATIC FLASHING LIGHT BUOY (ON AT DUSK-OFF AT DAWN) 100' ON CENTER SHALL BE USED IN NAVIGABLE CHANNELS ONLY

EROSION CONTROL PLAN LEGEND: FLOATING TURBIDITY CURTAIN

FLOATING TURBIDITY CURTAIN GENERAL NOTES

(A) FLOATING TURBIDITY CURTAINS (ALSO KNOWN AS TURBIDITY BARRIERS OR SILT CURTAINS) CREATE A BARRIER TO PREVENT TURBID WATER FROM ENTERING CLEAR WATER. FLOATING TURBIDITY CURTAINS SHOULD BE USED TO ISOLATE ACTIVE CONSTRUCTION AREAS WITHIN OR ADJACENT TO A BODY OF WATER TO MINIMIZE THE MIGRATION OF SILT LADEN WATER OUT OF THE CONSTRUCTION ZONE.

(B) TURBIDITY CURTAINS SHALL NOT BE INSTALLED PERPENDICULAR ACROSS THE MAIN FLOW OF A SIGNIFICANT BODY OF MOVING WATER.

(C) FLOATING TURBIDITY CURTAINS SHALL NO BE USED WHERE THE ANTICIPATED FLOW VELOCITIES WILL EXCEED 5 FT/SEC.

(D) TURBIDITY CURTAINS SHALL BE ANCHORED TO PREVENT DRIFT SHOREWARD OR DOWNSTREAM. ANCHORAGE SHALL BE INSTALLED ON BOTH SHORE AND STREAM SIDE. CURTAINS SHALL BE INSTALLED AS CLOSE TO PROJECT SITE AS POSSIBLE. BARRIERS SHOULD BE A BRIGHT COLOR (YELLOW OR "INTERNATIONAL" ORANGE ARE RECOMMENDED) THAT WILL ATTRACT THE ATTENTION OF NEARBY BOATERS.

(E) SHORE ANCHORS SHALL CONSIST OF A POST WITH DEADMAN OR APPROVED EQUAL. STREAM ANCHORS SHALL BE OF SUFFICIENT SIZE TO STABILIZE THE BARRIER WITH NUMBER AND SPACING DEPENDENT ON WATERWAY VELOCITIES AND MANUFACTURER'S RECOMMENDATIONS.

(F) IN SHALLOW WATER (2 FEET OF DEPTH OR LESS) A TURBIDITY CURTAIN MAY BE INSTALLED ON STAKES DRIVEN INTO THE BED OF THE WATER BODY.

(G) FABRIC SECTIONS SHALL BE CONNECTED END TO END WITH MINIMUM Ü" DIAMETER POLYPROPYLENE ROPE. FABRIC SHALL BE SEAMED TOGETHER IN A MANNER THAT RETAINS THE OVERALL TENSILE STRENGTH.

(H) DESIGN OF CURTAIN AND ANCHORAGE SHALL BE IN ACCORDANCE WITH MANUFACTURER'S RECOMMENDATIONS. FILTER CLOTH SKIRT SHOULD BE ABLE TO WITHSTAND THE FORCES IMPARTED ON IT DUE TO THE EXPECTED WIND VELOCITY OR STREAM VELOCITY. FABRIC SHALL BE MADE OF A NON-DETERIORATING MATERIAL, SUCH AS PLASTIC OR NYLON, WHICH WILL ALLOW WATER TO PASS THROUGH WHILE STILL RETAINING SEDIMENT.

(I) THE TURBIDITY CURTAIN AND ADJACENT WORK AREAS SHALL NOT BE DISTURBED 12 HOURS PRIOR TO REMOVAL FROM WATER BODY. MAINTENANCE SHALL BE PERFORMED AS NEEDED. CONTRACTOR SHALL REMOVE THE CURTAIN AT COMPLETION OF WORK IN A MANNER THAT WILL PREVENT SILTATION OF THE WATERWAY. DURING REMOVAL, EXTREME CARE SHOULD BE TAKEN NOT TO DISTURB ANY SEDIMENT DEPOSITS.

(J) MAINTAIN 12" MINIMUM GAP BETWEEN SKIRT BOTTOM AND CHANNEL BOTTOM TO PREVENT ACCUMULATED SEDIMENT FROM PULLING TOP OF CURTAIN BELOW WATER SURFACE.

(K) IN WIND OR WAVE ACTION SITUATIONS, THE MAXIMUM DEPTH OF THE CURTAIN SHALL BE 12 FEET.

(L) CONCENTRATED FLOWS SHALL NOT DISCHARGE BEYOND FLOATING TURBIDITY CURTAIN. CURTAINS ARE NOT TO BE INSTALLED ACROSS FLOWING BODY OF WATER.

(M) WHEN INSTALLED IN A NAVIGABLE WATERWAY, BUOYS SHOULD BE LIT ACCORDING TO REGULATORY AGENCY STANDARDS.

(N) WHEN ESTIMATING THE LENGTH OF TURBIDITY CURTAIN, ALLOW 10 TO 20 PERCENT VARIANCE IN STRAIGHT LINE MEASUREMENT.

(O) PAYMENT FOR FLOATING TURBIDITY CURTAIN SHALL INCLUDE ALL MATERIAL AND LABOR NECESSARY FOR CONSTRUCTION, MAINTENANCE, AND REMOVAL OF TURBIDITY CURTAINS

(P) ONLY FLOATING TURBIDITY CURTAINS LISTED ON THE APPROVED PRODUCTS LIST MAY BE USED.

DATE	REVISION	BY

MISSISSIPPI DEPARTMENT OF TRANSPORTATION

FLOATING TURBIDITY CURTAIN

WORKING NUMBER ECD-19

SHEET NUMBER

FILENAME: EROSION CONTROL\ECD-19.DGN

DESIGN TEAM _____ CHECKED _____ DATE _____

PLAN
ROADWAY DESIGN DIVISION
MISSISSIPPI DEPARTMENT OF TRANSPORTATION
1/20/2010 9:49 AM ECD-19.DGN

STATE	PROJECT NO.
MISS.	

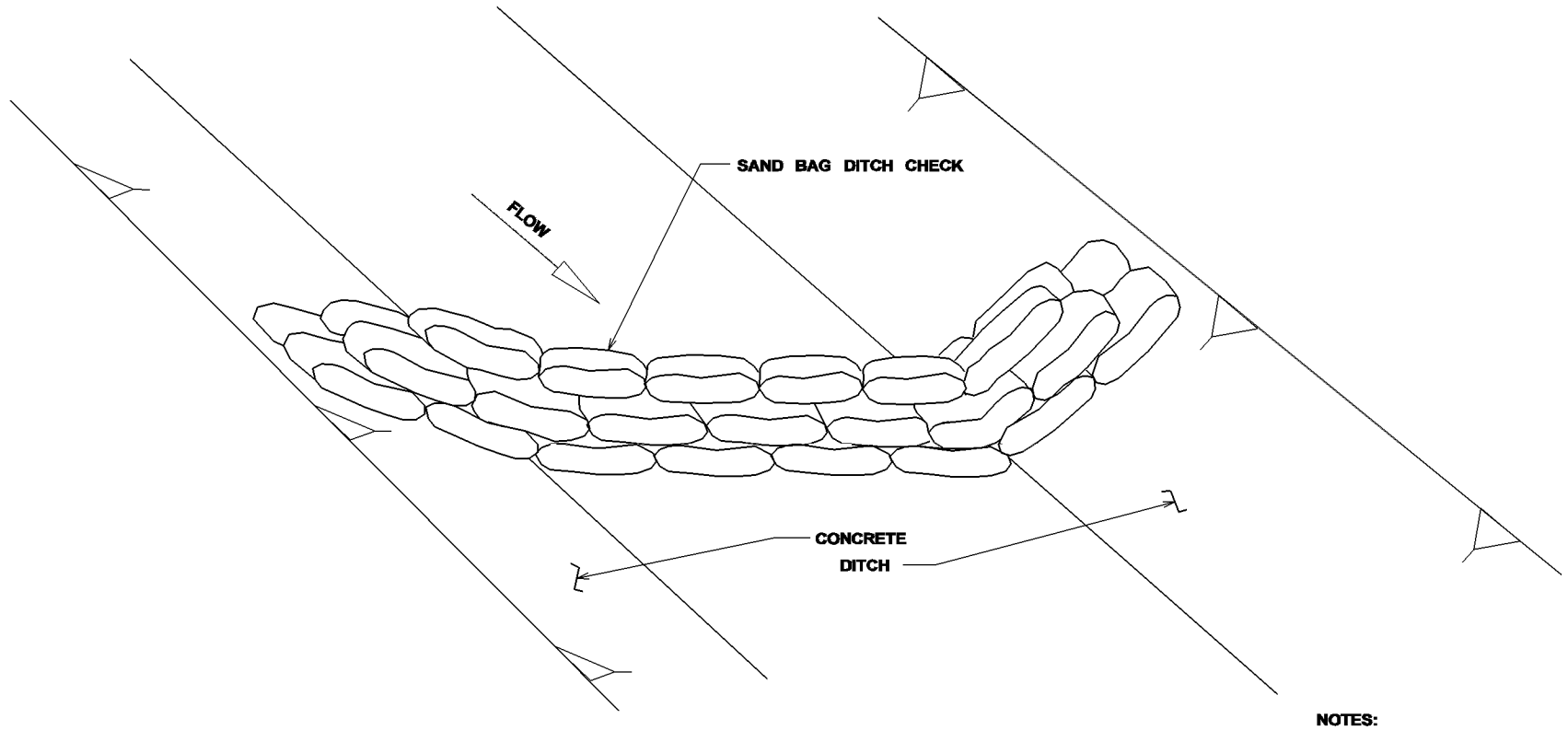

DETAIL (DITCH CHECK)

NOTES:

1. MINIMUM RECOMMENDED PLACEMENT INTERVAL BETWEEN SAND BAG DITCH CHECK IS 100' UNLESS SHOWN OTHERWISE ON THE PLANS OR APPROVED BY THE ENGINEER. SEE SPACING GUIDANCE ON ECD-4.

2. PREVENTING SEDIMENT FROM ENTERING A PAVED DITCH IS PREFERABLE TO CAPTURING SEDIMENT WITHIN PAVED DITCH.

SAND BAG DITCH CHECK SELECTION GUIDELINES

SAND BAG DITCH CHECKS ARE USED FOR VELOCITY REDUCTION AND MINIMAL SEDIMENT TRAPPING IN CONCRETE PAVED DITCHES OR IN DITCHES THAT HAVE ROCKY BOTTOMS.

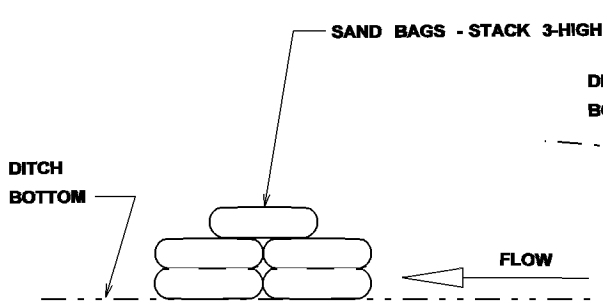

SECTION A-A

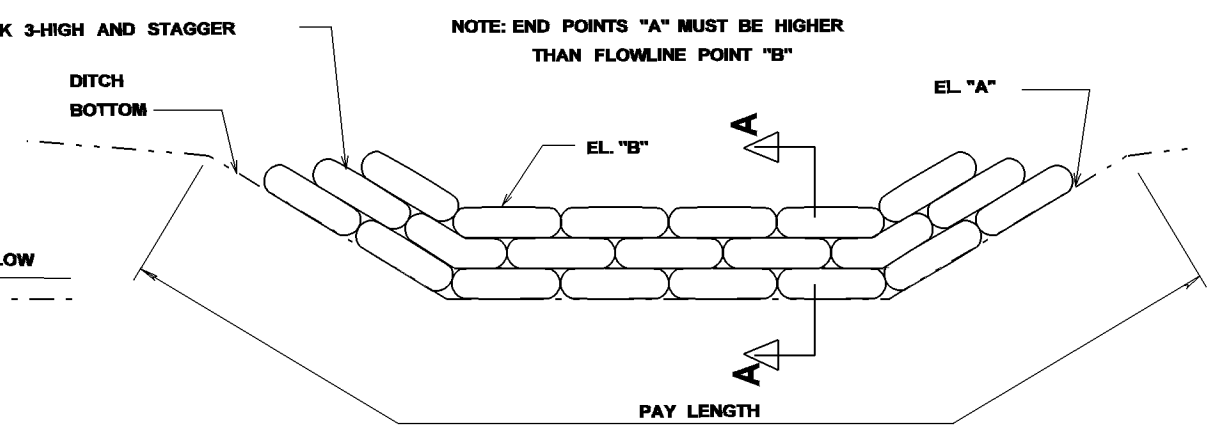

ELEVATION DETAIL

REVISION	BY	DATE

MISSISSIPPI DEPARTMENT OF TRANSPORTATION

DETAILS OF EROSION CONTROL
SANDBAG DITCH CHECK

WORKING NUMBER
ECD-20

SHEET NUMBER

FILENAME: EROSION CONTROL\ECD-20.DGN

DESIGN TEAM _____ CHECKED _____ DATE _____

PLAN
ROADWAY DESIGN DIVISION
MISSISSIPPI DEPARTMENT OF TRANSPORTATION

1/20/2010 9:50 AM ECD-20.DGN

STATE	PROJECT NO.
MISS.	

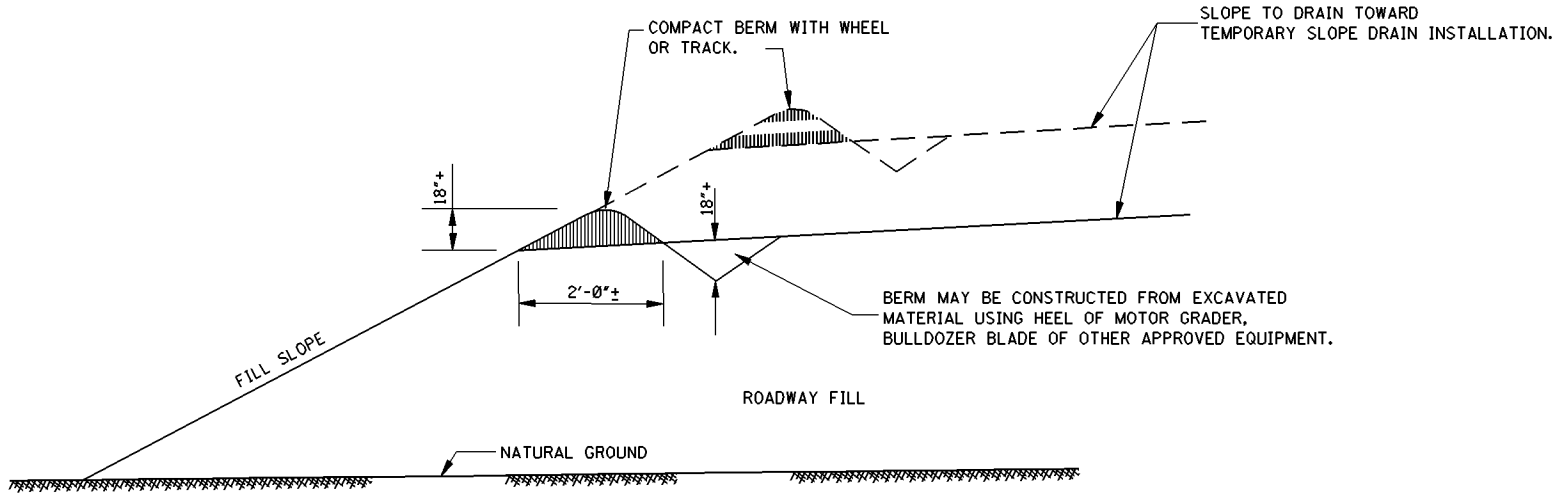

TEMPORARY SHOULDER BERM

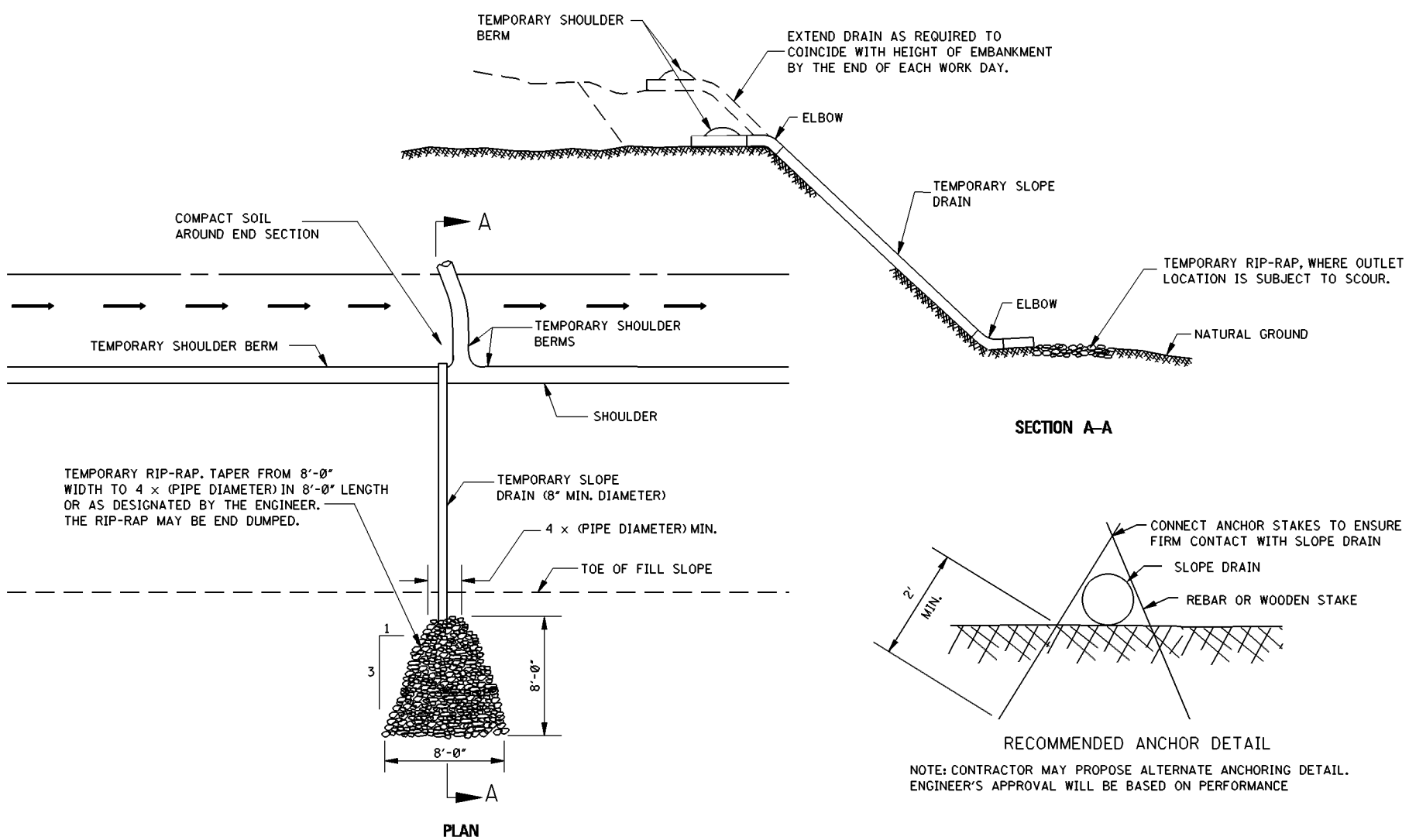

SECTION A–A

PLAN

RECOMMENDED ANCHOR DETAIL

NOTE: CONTRACTOR MAY PROPOSE ALTERNATE ANCHORING DETAIL. ENGINEER'S APPROVAL WILL BE BASED ON PERFORMANCE

TEMPORARY SLOPE DRAIN

NOTE: TEMPORARY SLOPE DRAINS TO BE PLACED AT LOW POINT OF ALL SAG VERTICAL CURVES. INTERMEDIATE LOCATIONS TO BE PLACED AS DESIGNATED OR DEEMED APPROPRIATE BY THE CONTRACTOR AND APPROVED BY THE ENGINEER.

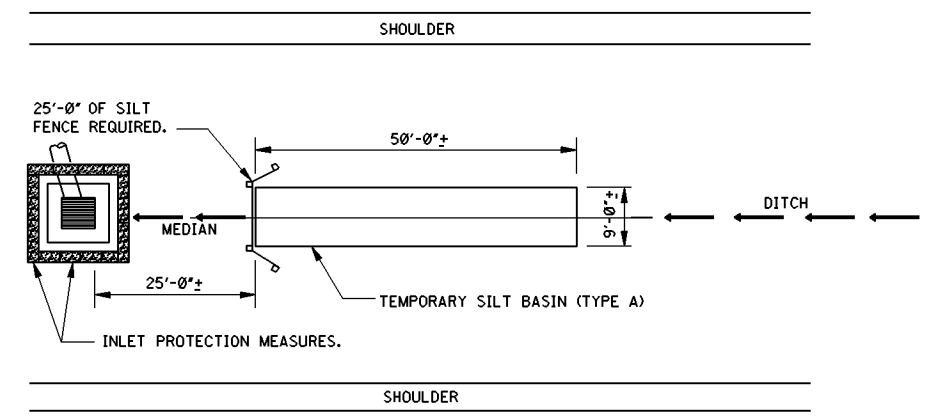

TEMPORARY MEDIAN SILT BASIN (TYPE A)

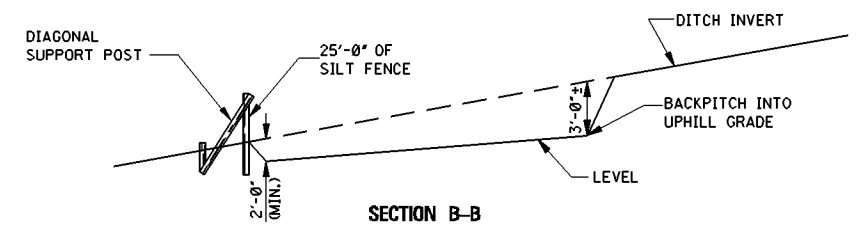

SECTION B–B

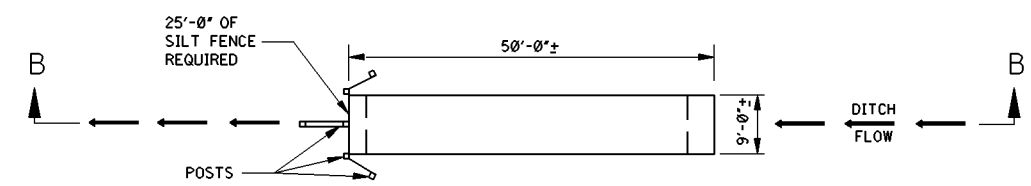

PLAN

TEMPORARY SILT BASIN (TYPE A)

NOTE: TEMPORARY SILT BASIN (TYPE A) TO BE PLACED IN SURFACE DRAIN DITCHES AND SIDE DITCHES AT THE END OF CUT SECTIONS, IMMEDIATELY PRECEEDING DITCH INLETS AND JUST BEFORE THE WATER (RUNOFF) LEAVES THE RIGHT-OF-WAY OR ENTERS A WATER COURSE. LOCATION AND SIZE (OTHER THAN AS SHOWN) MAY BE REQUIRED AS DIRECTED BY THE ENGINEER.

GENERAL NOTES:

1. THE CONTRACTOR SHALL BE REQUIRED TO FURNISH ALL MATERIALS AND PERFORM ALL WORK FOR THE PROPER INSTALLATION, MAINTENANCE AND REMOVAL OF TEMPORARY EROSION CONTROL MEASURES NECESSARY TO CONTROL SILTATION.

MISSISSIPPI DEPARTMENT OF TRANSPORTATION

TYPICAL TEMPORARY EROSION CONTROL MEASURES

(SLOPE DRAIN AND TYPE A SILT BASIN)

DATE	REVISION	BY

WORKING NUMBER TEC-2

SHEET NUMBER

FILENAME: ERSOSION CONTROL\TEC-2.DGN

DESIGN TEAM _____ CHECKED _____ DATE _____

PLAN ROADWAY DESIGN DIVISION MISSISSIPPI DEPARTMENT OF TRANSPORTATION
1/20/2010 9:52 AM TEC-2.DGN

STATE	PROJECT NO.
MISS.	

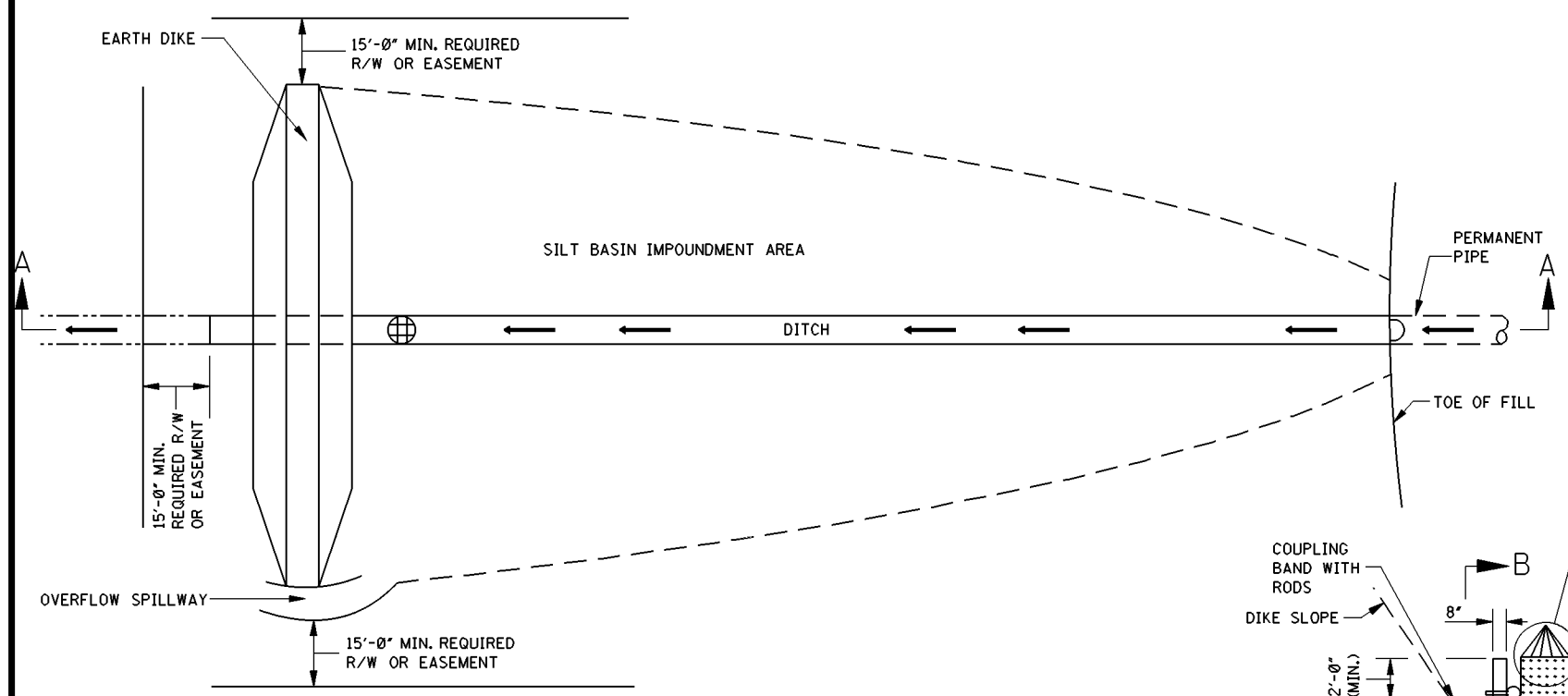

PLAN

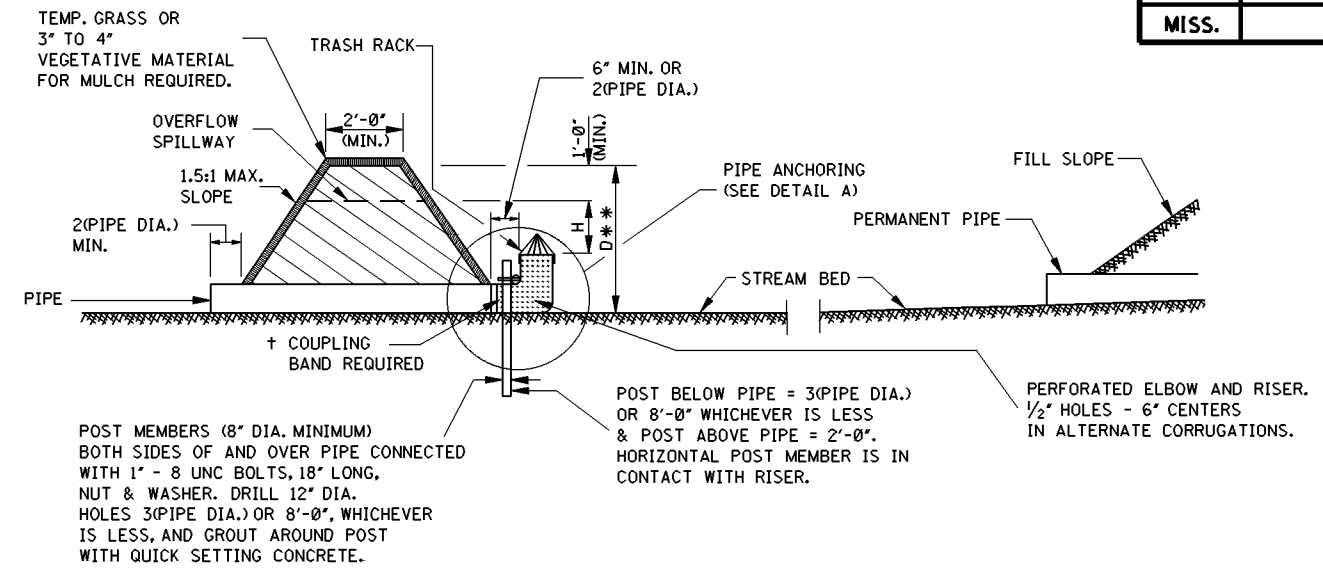

SECTION A–A

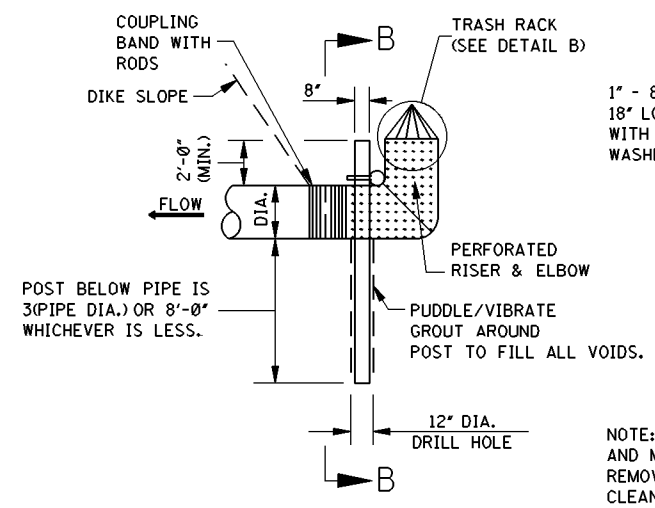

DETAIL A

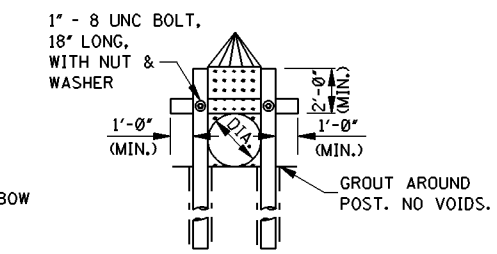

SECTION B–B

NOTE: POST MEMBERS MAY BE GREEN TIMBER AND MAY BE CUT OFF AT NATURAL GROUND REMOVAL. POST MUST BE 8" MINIMUM CLEAN DIAMETER.

PIPE ANCHORAGE

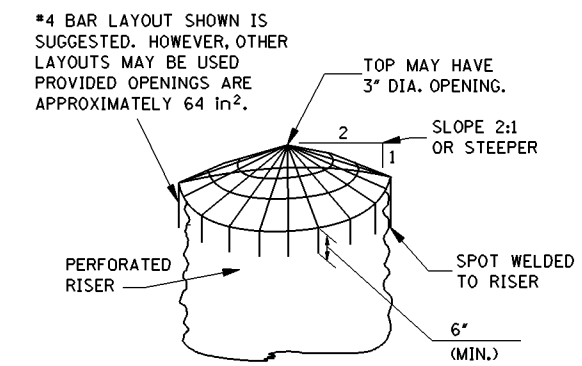

DETAIL B
TRASH RACK INSTALLATION

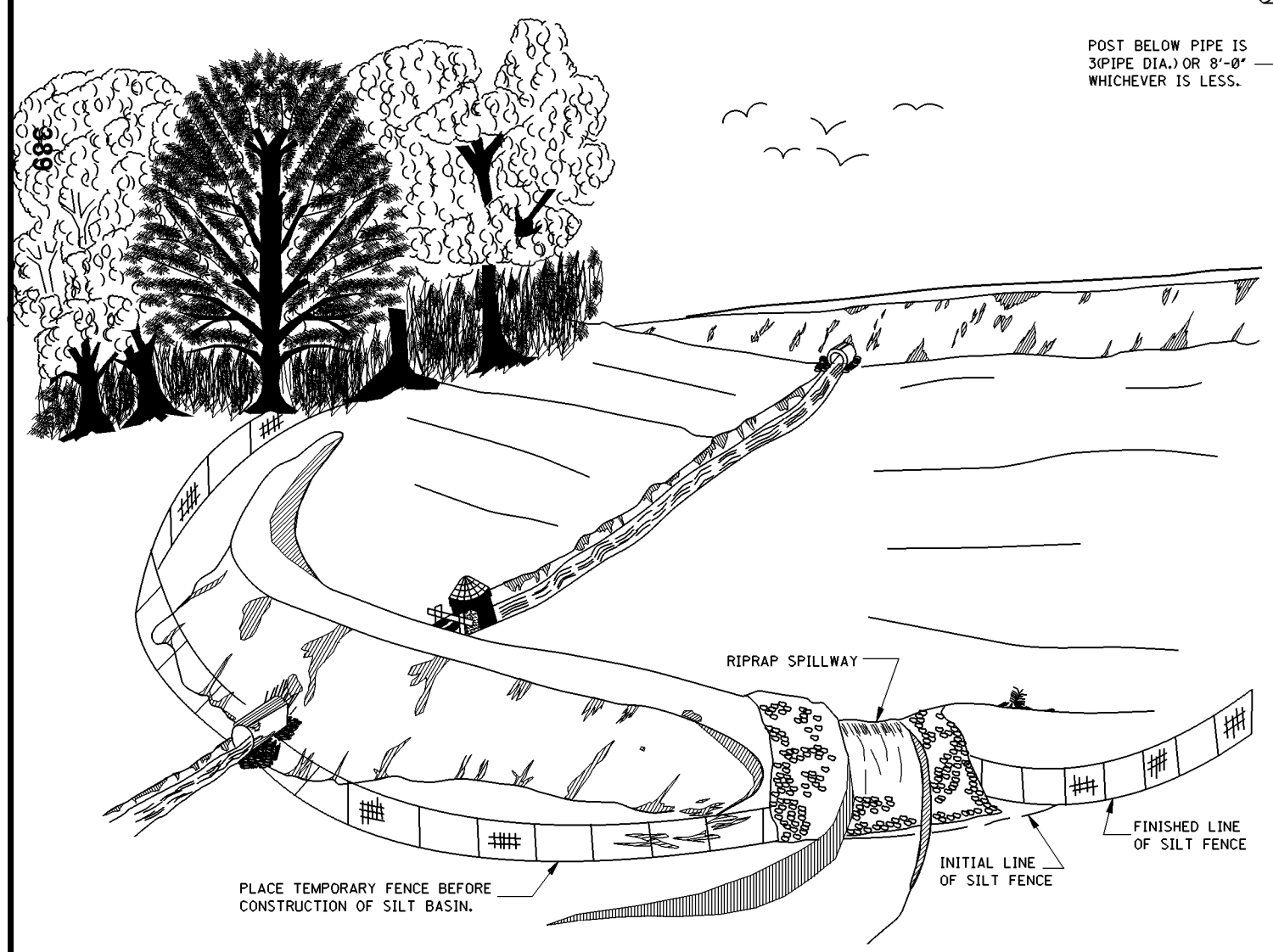

TEMPORARY SILT BASIN (TYPE B)

GENERAL NOTES:

1. PROVIDE OVERFLOW SPILLWAY IN NATURAL GROUND AT A MINIMUM OF 1'-0" BELOW TOP OF DIKE. CROSS-SECTIONAL AREA OF SPILLWAY IS EQUAL TO 1.5 TIMES THE AREA OF THE OUTLET PIPE MINIMUM. RIPRAP SHALL BE REQUIRED AT THE SPILLWAY. AFTER THE PURPOSE OF THE SILT BASIN HAS BEEN SERVED, THE DIKE AND RIPRAP MAY REMAIN IN PLACE AT THE DISCRETION OF THE ENGINEER, BUT THE DRAIN PIPE WITH RISER SHALL BE REMOVED AND THE NEWLY DISTURBED AREA REVEGETATED.
2. BASIN AND DIKE DIMENSIONS DO NOT REQUIRE CONSTRUCTION TO NEAT LINES.
3. THE SILT BASIN MAY BE CONSTRUCTED IN ANY SHAPE WITH THE DIKE EXTENDING ALONG ONE OR MORE SIDES AS LONG AS THE LENGTH MEASURED IN THE DIRECTION OF FLOW IS APPROXIMATELY TWICE THE WIDTH AND THE IMPOUNDMENT AREA AND DEPTH AT LEAST AS LARGE AS INDICATED.
4. MINIMUM DIMENSIONS FOR SILT BASIN (TYPE B) ARE AS FOLLOWS:

MIN. DIMENSIONS OF SILT BASIN (TYPE B)				† COUPLING BAND	
PIPE	** D (ft-in)	H (ft-in)	* AREA (ft²)	LENGTH (in)	COUPLING RODS/SIDE
15"	4'-0"	1'-0"	310	12"	2 & 2
18"	5'-0"	1'-0"	550	12"	2 & 2
24"	5'-0"	1'-0"	1100	12"	2 & 2
30"	6'-0"	1'-6"	1850	24"	3 & 3
36"	6'-0"	1'-6"	2800	24"	3 & 3
42"	7'-0"	2'-0"	4200	24"	3 & 3
48"	8'-0"	2'-0"	6200	24"	3 & 3

NOTES:
* 1. IMPOUNDMENT SURFACE AREAS ARE MEASURED AT ELEVATION OF TOP OF ELBOW RISER.
** 2. RISER REQUIRED WHERE MINIMUM "D" DIMENSION IS EXCEEDED. LENGTH OF RISER IS EQUAL TO THE AMOUNT THAT MINIMUM "D" DIMENSION IS EXCEEDED.
† 3. COUPLING RODS TO BE 1/2" DIAMETER MINIMUM WITH LUGS.

5. IN SELECTING BASIN SIZE, CONSIDERATION MUST BE GIVEN TO THE AREA DISCHARGING INTO THE BASIN OTHER THAN THAT WHICH COMES THROUGH THE PIPE UNDER THE ROADWAY. THIS WILL AT TIMES NECESSITATE A LARGER BASIN AND OUTLET PIPE SECTION.
6. THE DIKE SHALL BE CONSTRUCTED OF A MATERIAL SUITABLE FOR ROADWAY EMBANKMENT.
7. SILT BASIN (TYPE B) REQUIRED AT LOCATION(S) INDICATED ON PLANS.
8. THE CONTRACTOR SHALL BE REQUIRED TO FURNISH ALL MATERIALS AND PERFORM ALL WORK FOR THE PROPER INSTALLATION, MAINTENANCE AND REMOVAL OF TEMPORARY EROSION CONTROL MEASURES NECESSARY TO CONTROL SILTATION.
9. THE USE OF THE TEMPORARY EROSION CONTROL MEASURE SHOWN ON THIS SHEET WILL ONLY BE REQUIRED AND MEASURED FOR SEPARATE PAYMENT WHEN AN APPROPRIATE PAY ITEM IS INCLUDED IN THE BID SCHEDULE OF THE PROPOSAL.
10. RIPRAP AND TEMPORARY SILT FENCE, USED IN CONJUNCTION WITH TYPE B SILT BASINS AS SHOWN BY THE DETAILS ON THIS SHEET, WILL NOT BE MEASURED FOR SEPARATE PAYMENT. THEIR COST SHALL BE INCLUDED IN THE PRICE BID FOR TYPE B SILT BASIN.

DATE	REVISION	BY

MISSISSIPPI DEPARTMENT OF TRANSPORTATION
ROADWAY DESIGN DIVISION
STANDARD PLAN

TYPICAL TEMPORARY EROSION CONTROL MEASURES
(TYPE B SILT BASIN)

ENGLISH

WORKING NUMBER TEC-3

ISSUE DATE: OCTOBER 1, 1998

SHEET NUMBER 144

STATE	PROJECT NO.
MISS.	

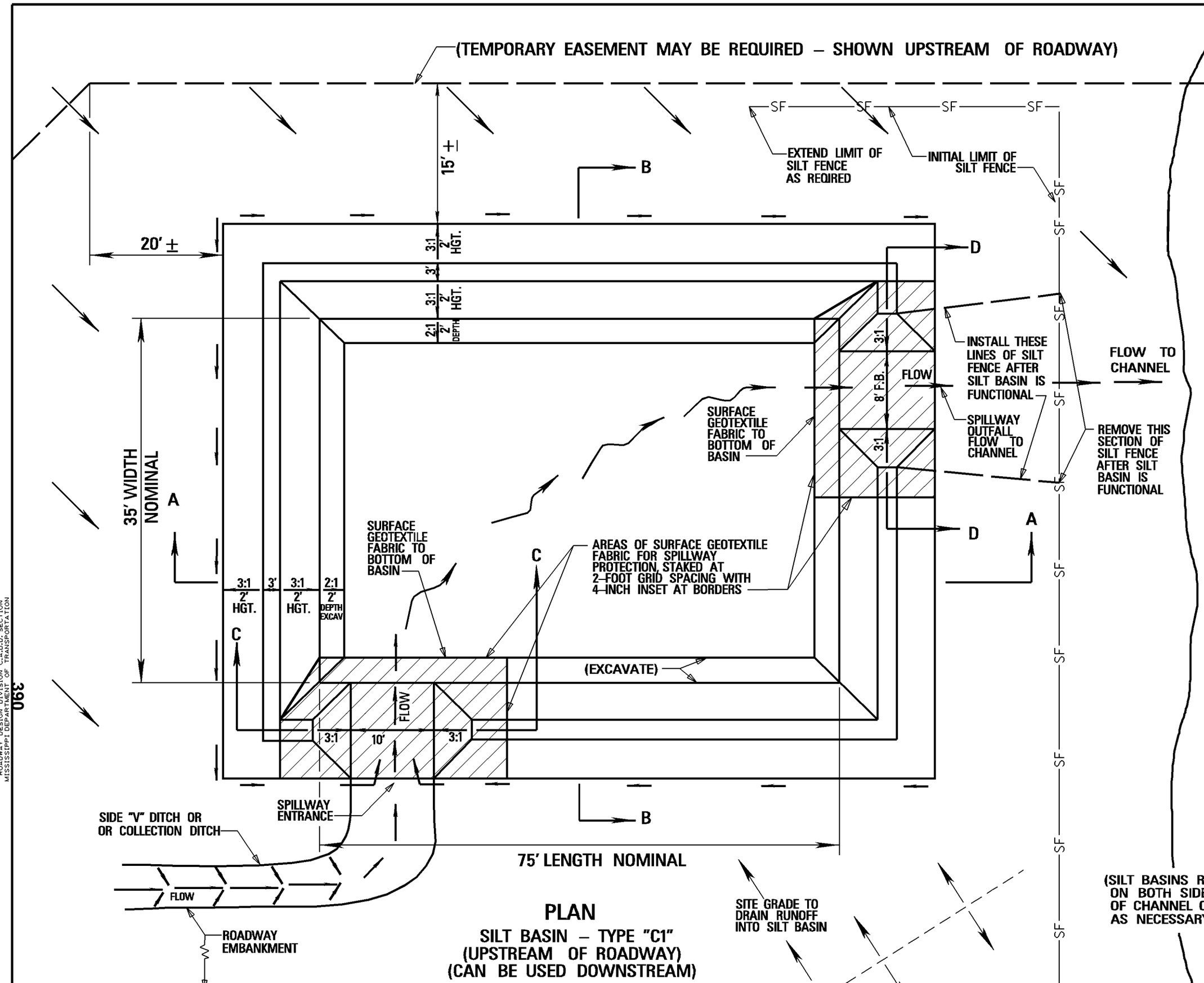

PLAN
SILT BASIN – TYPE "C1"
(UPSTREAM OF ROADWAY)
(CAN BE USED DOWNSTREAM)

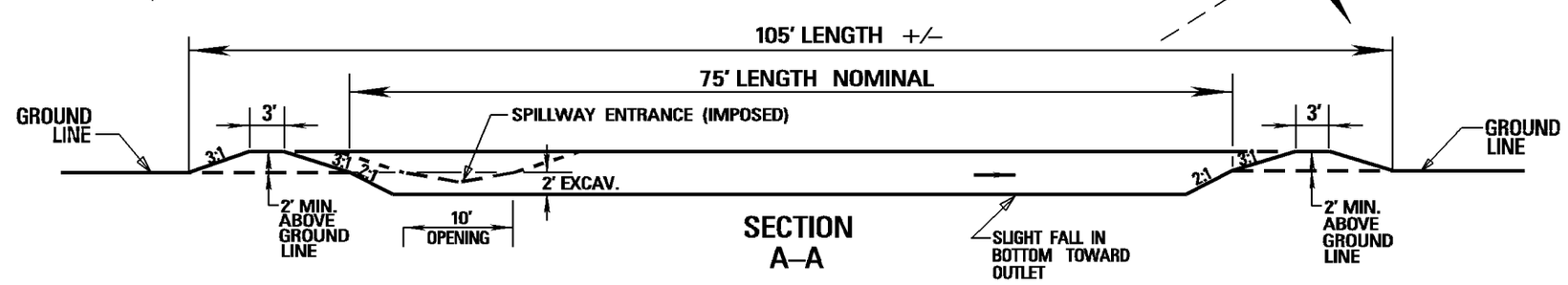

SECTION A–A

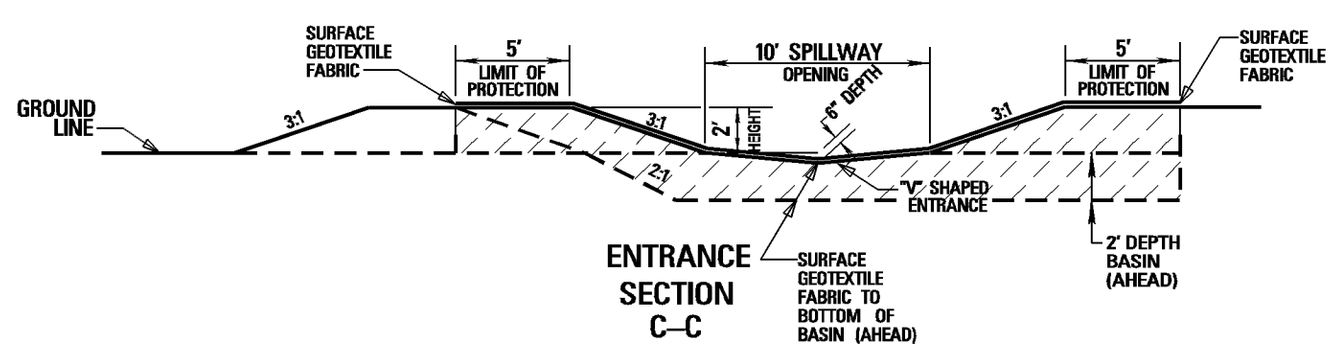

ENTRANCE SECTION C–C

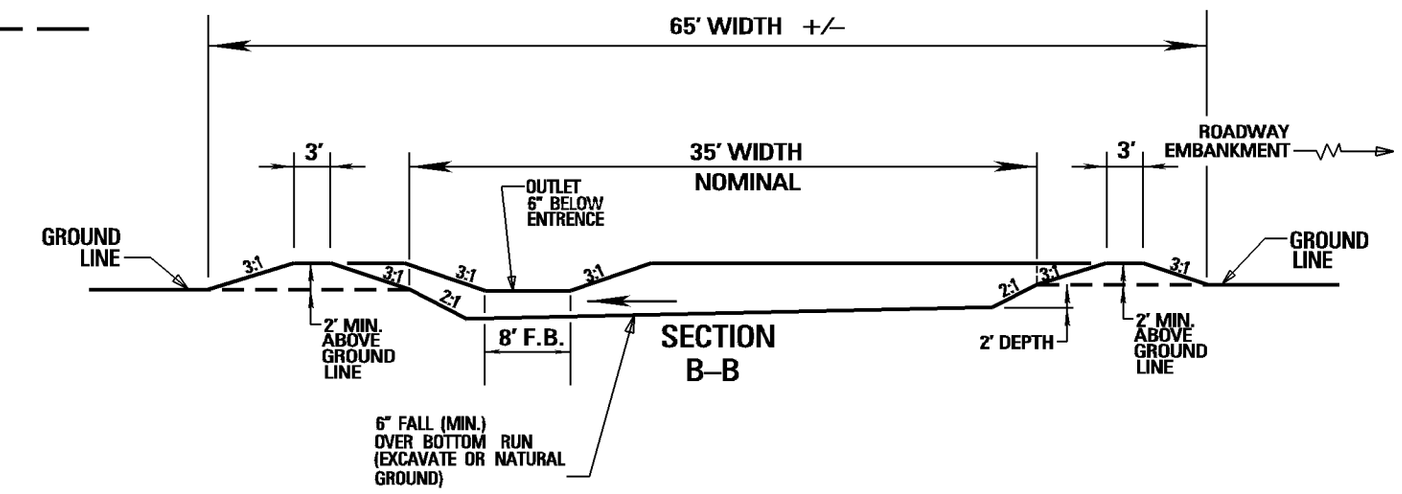

SECTION B–B

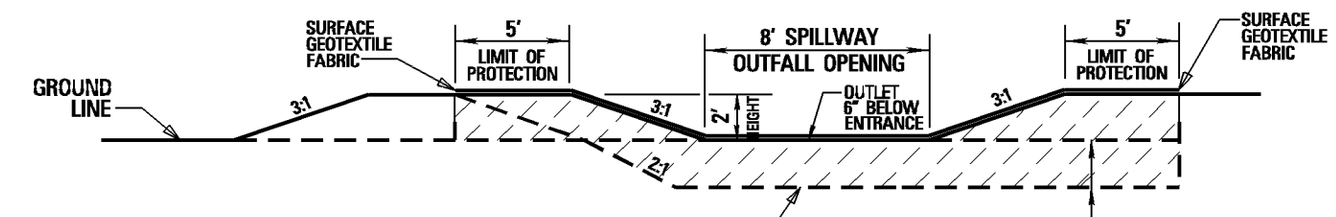

OUTLET SECTION D–D

NOTES:

1. FOR UPSTREAM SIDE OF BRIDGE, BOX CULVERT, AND LARGER PIPE CULVERT CONSTRUCTION SITES OR AS REQUIRED (MAY BE DOWNSTREAM).
2. TYPE "C1" SILT BASIN SUBSTITUTED FOR TYPE "C2" SILT BASIN AS DIRECTED BY ENGINEER OR AS PER PLANS.
3. SEE TYPE "C2" SILT BASIN FOR DOWNSTREAM APPLICATION PRIMARILY (TEC–C2).
4. SURFACE GEOTEXTILE FABRIC FOR SPILLWAY PROTECTION SHALL BE THE SAME TYPE AS SILT FENCE.
5. THE SILT BASIN CAPACITY IS TO PROVIDE 67 CU. YD. PER ACRE OF DRAINAGE AREA RECEIVED, AND THIS VOLUME IS TO BE MAINTAINED BELOW THE ENTRANCE ELEVATION INTO THE SILT BASIN.
6. THE TEMPORARY EROSION CONTROL MEASURES SHOWN ON THIS SHEET WILL ONLY BE MEASURED FOR SEPERATE PAYMENT WHEN APPROPRIATE PAY ITEMS ARE INCLUDED IN THE BID SCHEDULE OF THE PROPOSAL.
7. THE ACCUMULATED SILT SHALL BE REMOVED WHEN IT REACHES 1/3 TO 1/2 THE CAPACITY OF THE SILT BASIN. SILT SHALL BE DISPOSED OF PROPERLY AND SHALL NOT BE DISPOSED OF IN THE VICINITY OF THE EROSION CONTROL DEVICES.

DATE	REVISION	BY

MISSISSIPPI DEPARTMENT OF TRANSPORTATION

TYPICAL TEMPORARY EROSION CONTROL MEASURES (TYPE "C1" SILT BASIN) (UPSTREAM OF ROADWAY PRIMARILY CAN BE USED DOWNSTREAM)

PROJ. NO.:
COUNTY:

WORKING NUMBER: TEC-C1
SHEET NUMBER

FILENAME: dgns/tec-c1.dgn
DESIGN TEAM ____ CHECKED ____ DATE ____

STATE	PROJECT NO.
MISS.	

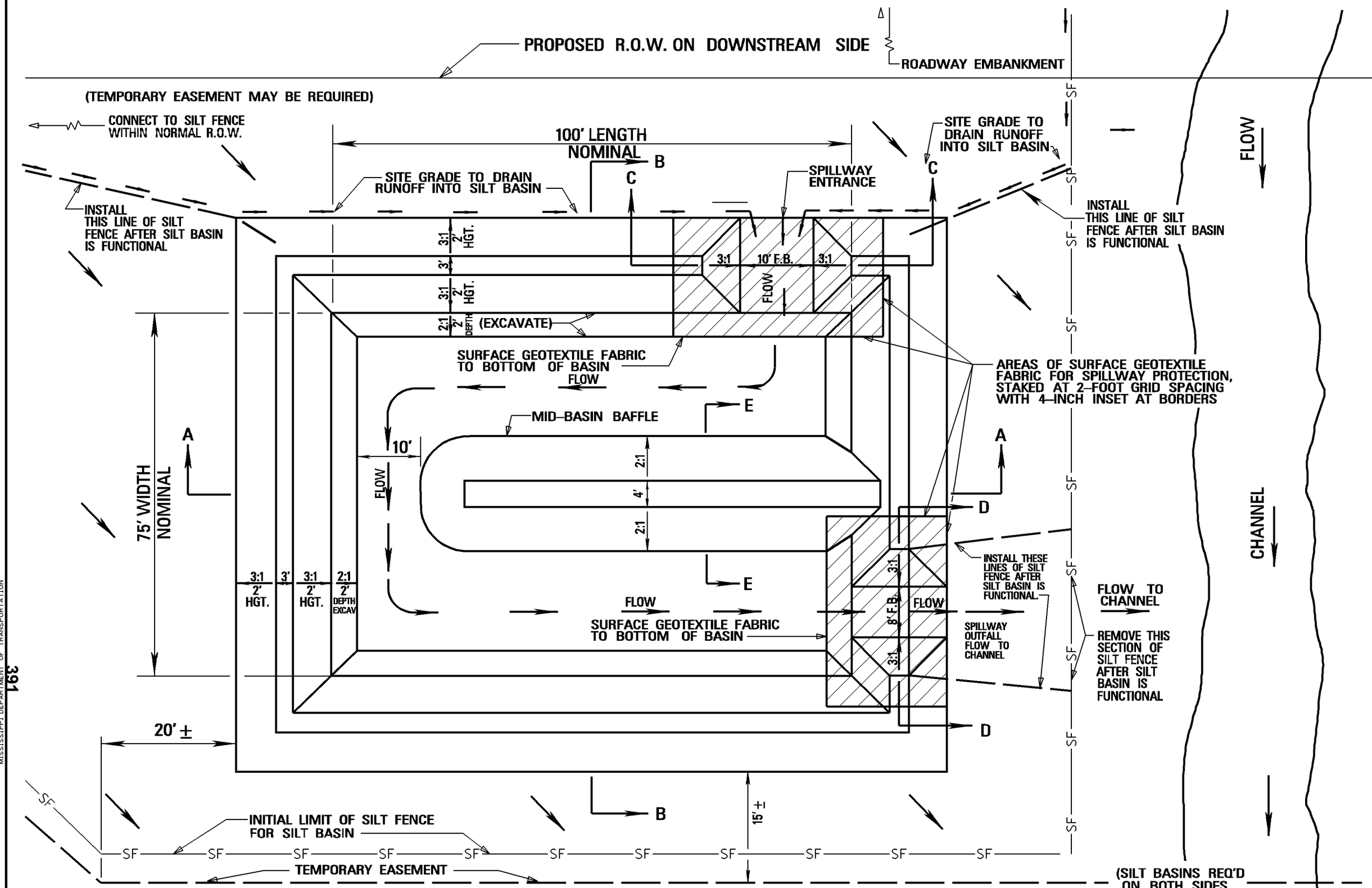

PLAN
SILT BASIN – TYPE "C2" (DOWNSTREAM OF ROADWAY)

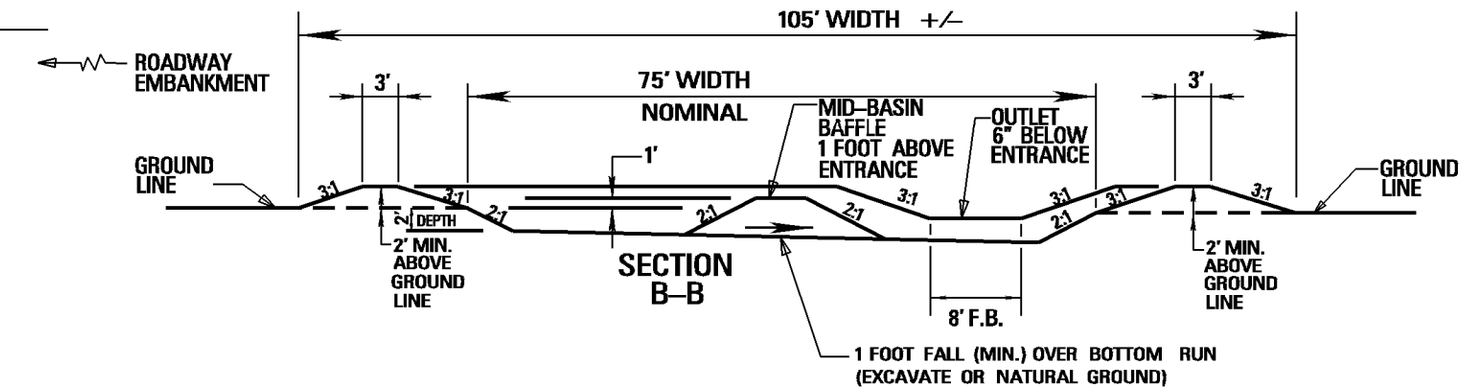

SECTION B–B

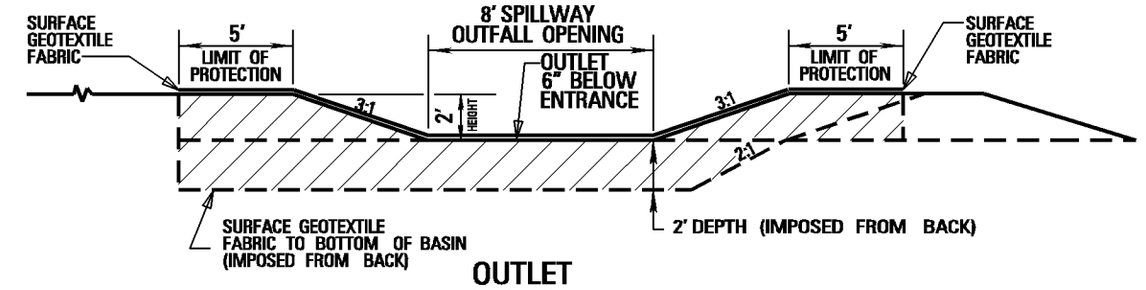

OUTLET SECTION D–D

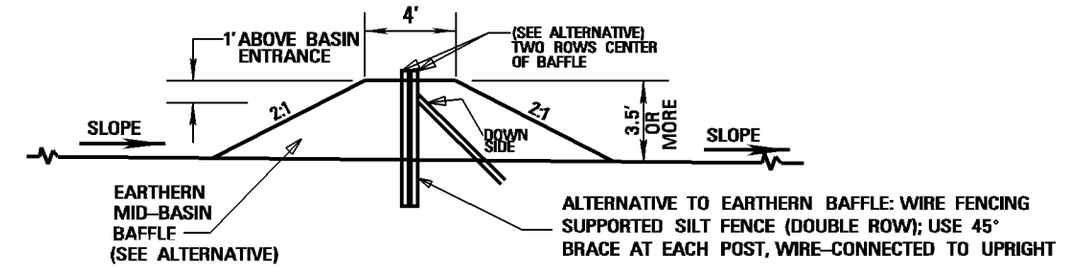

MID–BASIN BAFFLE SECTION E–E

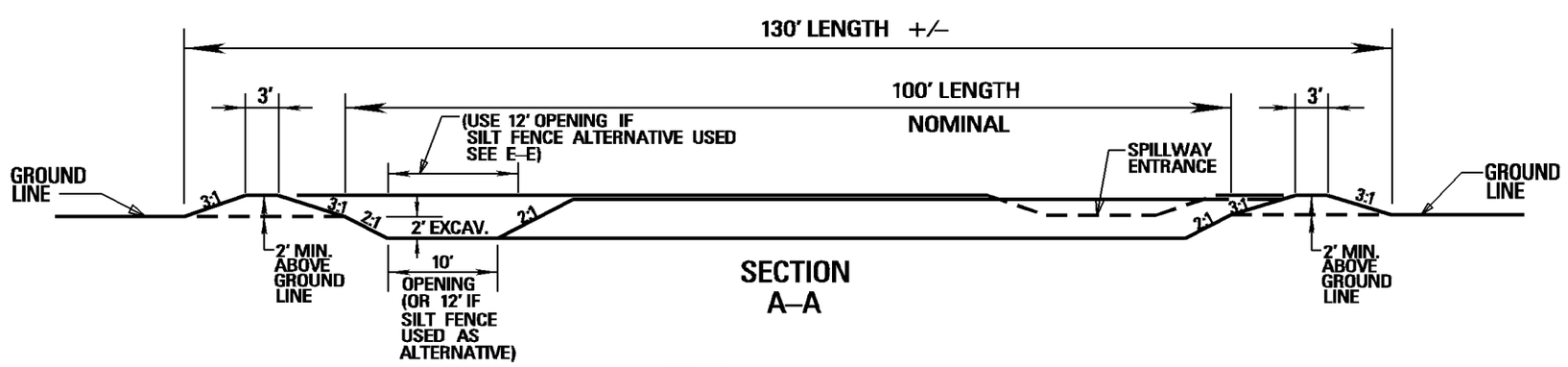

SECTION A–A

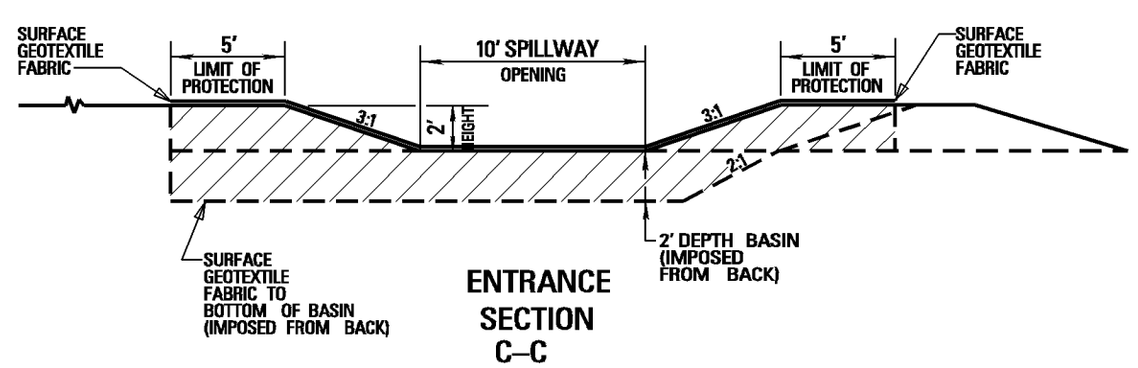

ENTRANCE SECTION C–C

NOTES:

FOR DOWNSTREAM SIDE OF BRIDGE, BOX CULVERT, AND LARGER PIPE CULVERT, CONSTRUCTION SITES OR AS REQUIRED.

TYPE "C1" SILT BASIN SUBSITUTED FOR TYPE "C2" SILT BASIN AS DIRECTED BY ENGINEER OR AS PER PLANS.

SEE TYPE "C1" SILT BASIN FOR UPSTREAM APPLICATION (TEC–C1) OR AS REQUIRED.

SURFACE GEOTEXTILE FABRIC FOR SPILLWAY PROTECTION SHALL BE THE SAME TYPE AS SILT FENCE.

THE SILT BASIN CAPACITY IS TO PROVIDE 67 CU. YD. PER ACRE OF DRAINAGE AREA RECEIVED, AND THIS VOLUME IS TO BE MAINTAINED BELOW THE ENTRANCE ELEVATION INTO THE SILT BASIN.

THE ACCUMULATED SILT SHALL BE REMOVED WHEN IT REACHES 1/3 TO 1/2 THE CAPACITY OF THE SILT BASIN. SILT SHALL BE DISPOSED OF PROPERLY AND SHALL NOT BE DISPOSED OF IN THE VICINITY OF THE EROSION CONTROL DEVICES.

THE TEMPORARY EROSION CONTROL MEASURES SHOWN ON THIS SHEET WILL ONLY BE MEASURED FOR SEPERATE PAYMENT WHEN APPROPRIATE PAY ITEMS ARE INCLUDED IN THE BID SCHEDULE OF THE PROPOSAL.

MISSISSIPPI DEPARTMENT OF TRANSPORTATION

TYPICAL TEMPORARY EROSION CONTROL MEASURES

(TYPE "C2" SILT BASIN DOWNSTREAM OF ROADWAY WITH BAFFLE)

PROJ. NO.:
COUNTY:

WORKING NUMBER: TEC-C2
SHEET NUMBER

FILENAME: dgns/tec-c2.dgn
DESIGN TEAM ____ CHECKED ____ DATE ____

REVISION | BY | DATE

PLAN
ROADWAY DESIGN DIVISION C.A.D.D. SECTION
MISSISSIPPI DEPARTMENT OF TRANSPORTATION

STATE	PROJECT NO.
MISS.	

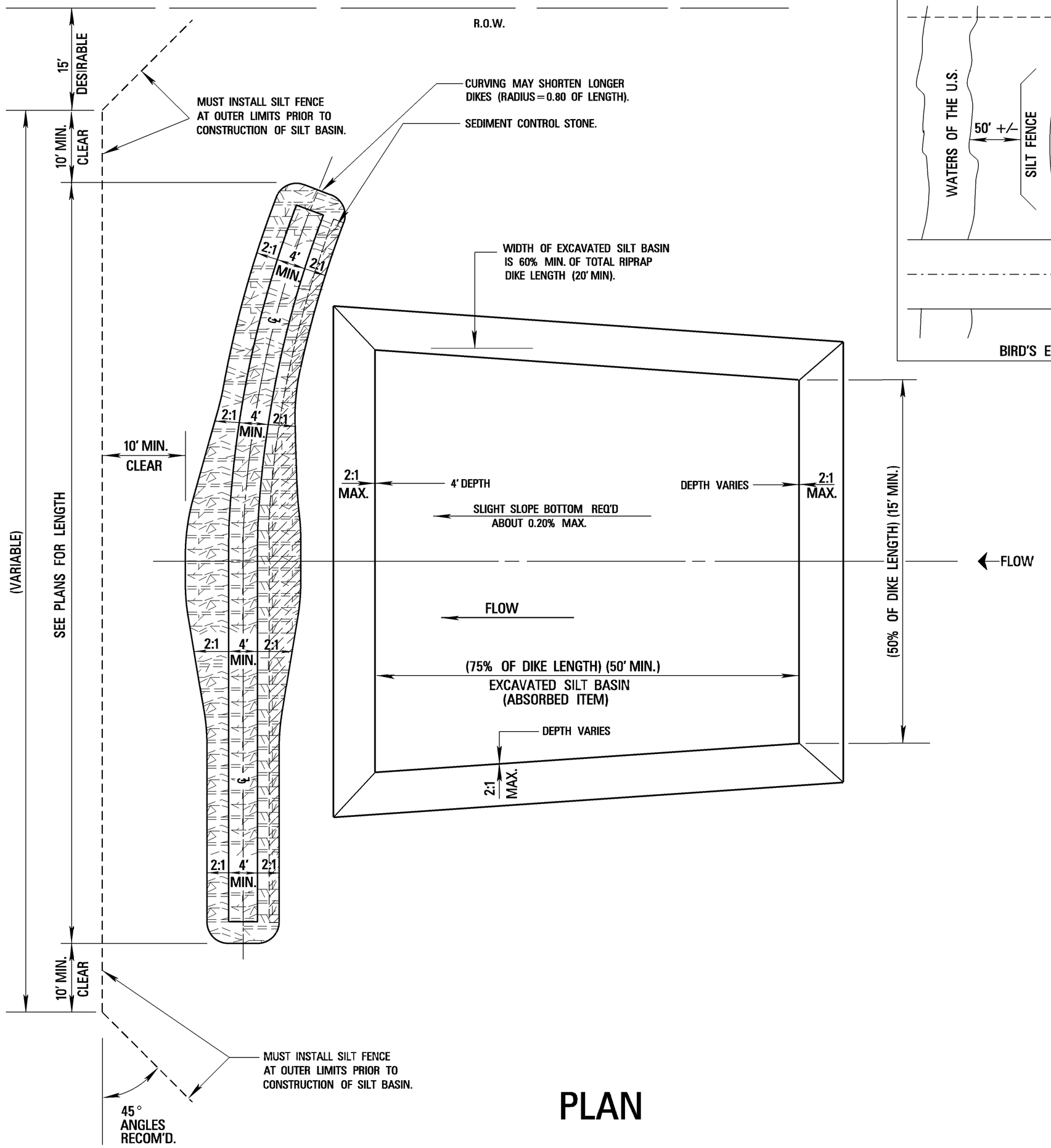

PLAN

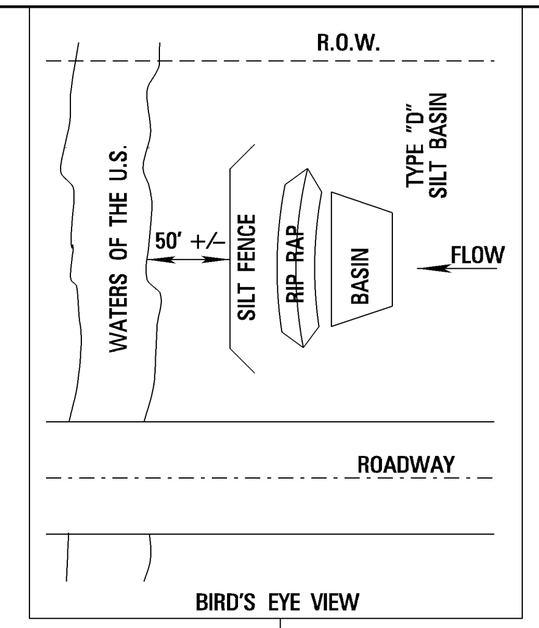

BIRD'S EYE VIEW

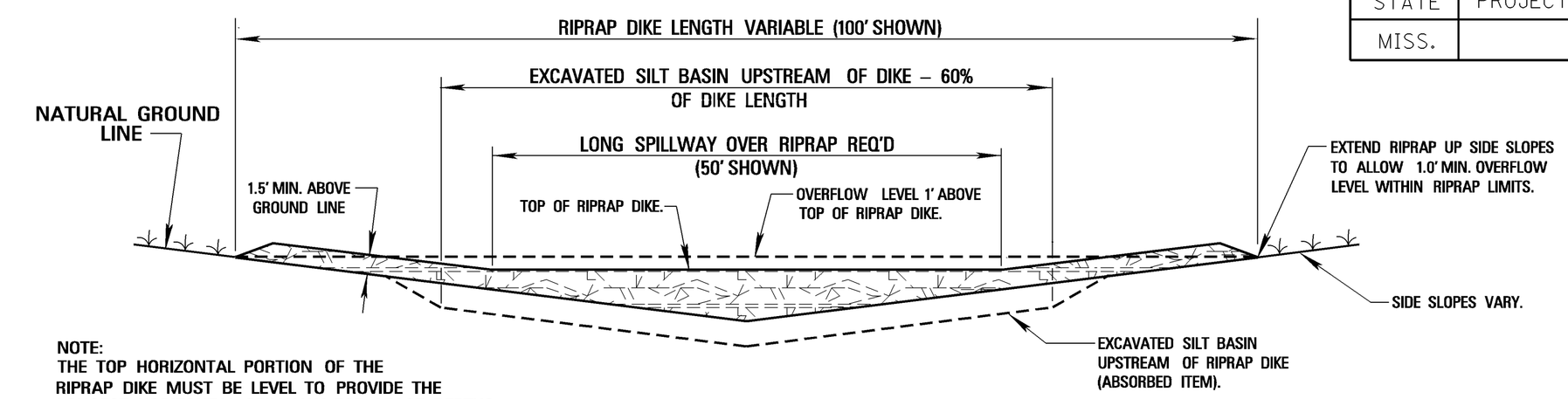

NOTE:
THE TOP HORIZONTAL PORTION OF THE RIPRAP DIKE MUST BE LEVEL TO PROVIDE THE LONGEST HORIZONTAL SPILLWAY FOR LEAST DEPTHS OF OVERFLOW (DO NOT MAKE A SPILLWAY NOTCH).

SECTION OF RIPRAP DIKE

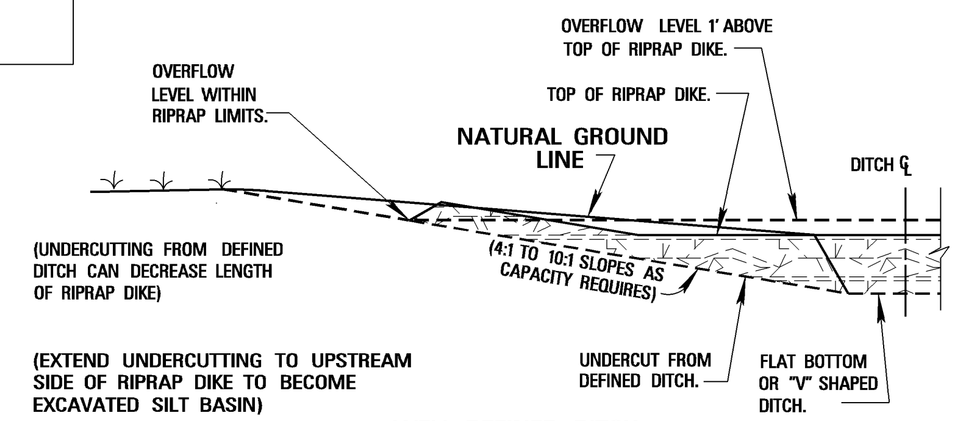

WELL DEFINED DITCH
(1/2 SECTION)

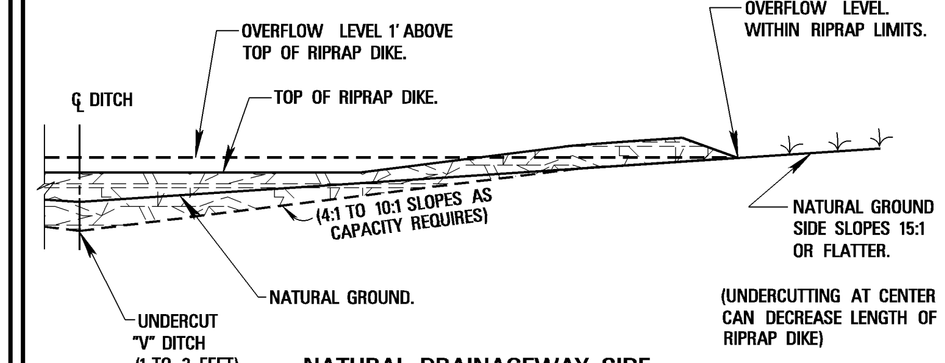

NATURAL DRAINAGEWAY SIDE SLOPES 15:1 AND FLATTER
(1/2 SECTION)

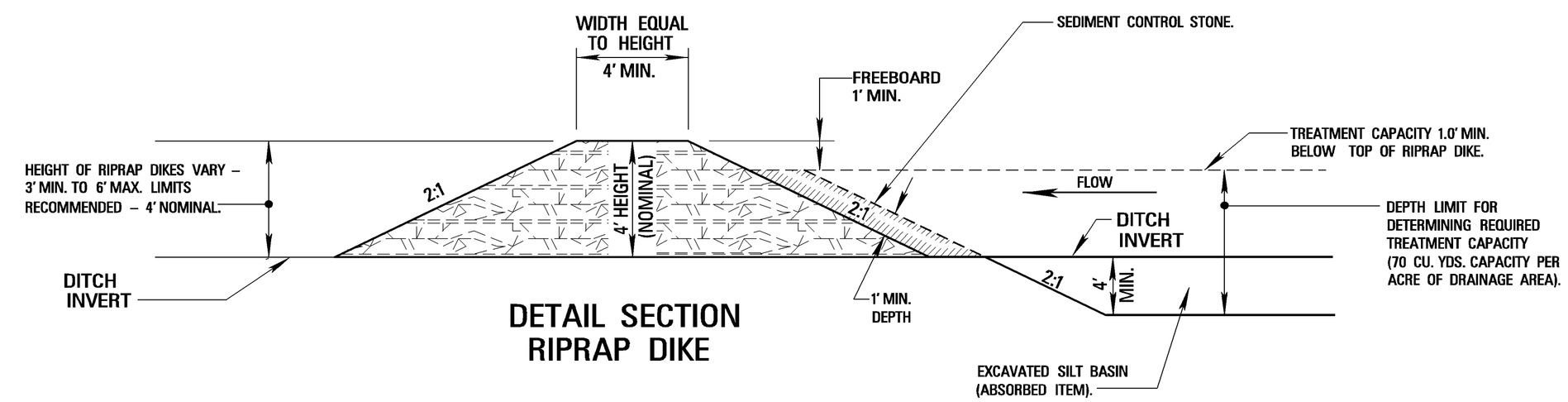

DETAIL SECTION RIPRAP DIKE

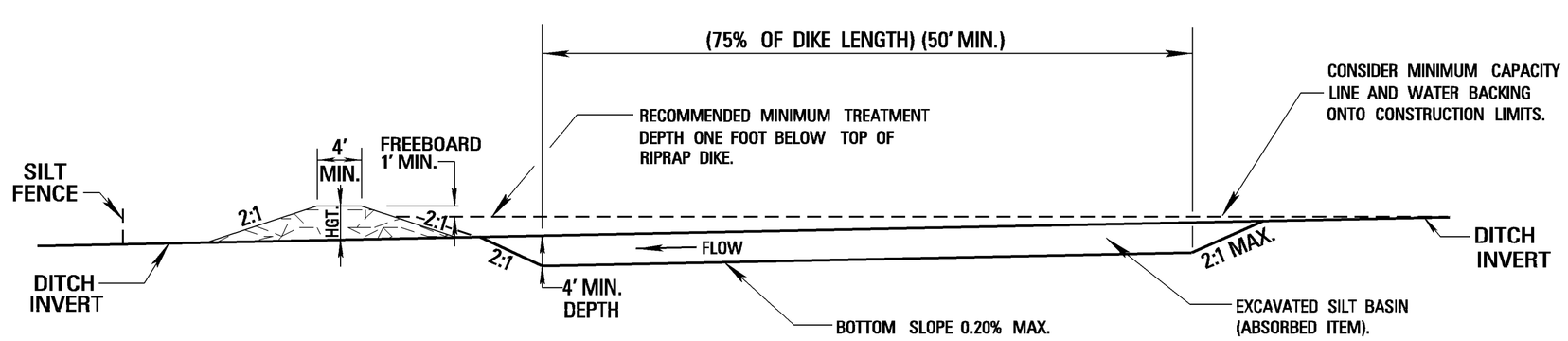

PROFILE

NOTES

1. THE REQUIRED SIZE / CAPACITY OF THE RIPRAP DIKE SILT BASIN IS TO PROVIDE AT LEAST 70 CUBIC YARDS OF VOLUME / CAPACITY PER ACRE OF DRAINAGE AREA RECEIVED. THE RIPRAP DIKE SILT BASIN MUST BE MAINTAINED AT ALL TIMES TO ASSURE THE INTENDED FUNCTION, REMOVING THE ACCUMULATED SILT ROUTINELY AND / OR WHEN APPROACHING A 50% MAXIMUM DECREASE FROM THE EFFECTIVE DESIGN CAPACITY, AND RESTORING THE BASIN TO ITS ORIGINAL EFFECTIVE DESIGN CAPACITY.

2. THE CONTRACTOR SHALL BE REQUIRED TO FURNISH ALL MATERIALS, PERFORM ALL WORK FOR THE PROPER INSTALLATION, MAINTENANCE, AND REMOVAL OF TEMPORARY EROSION CONTROL MEASURES NECESSARY TO CONTROL SILTATION.

3. AFTER THE PURPOSE FOR THE SILT BASIN HAS BEEN SERVED, THE POSTS AND SILT FENCE SHALL BE REMOVED. THE RIP RAP AND SEDIMENT STONE SHALL BE REMOVED AND PLACED AT A PIPE OUTLET. THE DISTURBED AREA SHALL BE SITE GRADED AND REVEGETATED AS DEEMED NECESSARY BY THE ENGINEER. ALL COSTS OF REMOVAL AND REPLACEMENT TO BE ABSORBED IN PAY ITEM FOR SILT BASIN.

4. RIPRAP FOR THE TYPE D SILT BASIN SHALL BE 300 LB RIPRAP AND SHALL BE PAID FOR – PER TON.

5. SEDIMENT CONTROL STONE SHALL BE SIZE NO. 57 STONE AND SHALL BE PAID FOR – PER TON.

6. THE TEMPORARY EROSION CONTROL MEASURES SHOWN ON THIS SHEET WILL ONLY BE MEASURED FOR SEPERATE PAYMENT WHEN APPROPRIATE PAY ITEMS ARE INCLUDED IN THE BID SCHEDULE OF THE PROPOSAL.

7. THE ACCUMULATED SILT SHALL BE REMOVED WHEN IT REACHES 1/3 TO 1/2 THE HEIGHT OF THE CONTROL FEATURE. SILT SHALL BE DISPOSED OF PROPERLY AND SHALL NOT BE DISPOSED OF IN THE VINCINITY OF THE EROSION CONTROL DEVICES.

DATE	REVISION	BY

MISSISSIPPI DEPARTMENT OF TRANSPORTATION

TYPICAL TEMPORARY EROSION CONTROL MEASURES (TYPE "D" SILT BASIN)

(RIPRAP DIKE SILT BASIN)
70 CU. YDS. CAPACITY PER ACRE OF DRAINAGE

PROJ. NO:
COUNTY:

WORKING NUMBER: TEC-D

SHEET NUMBER

FILENAME: EEROSION CONTROL\TEC-D70.DGN

DESIGN TEAM _____ CHECKED _____ DATE _____

ROADWAY DESIGN DIVISION C.A.D.D. SECTION
MISSISSIPPI DEPARTMENT OF TRANSPORTATION
892

STATE	PROJECT NO.
MISS.	

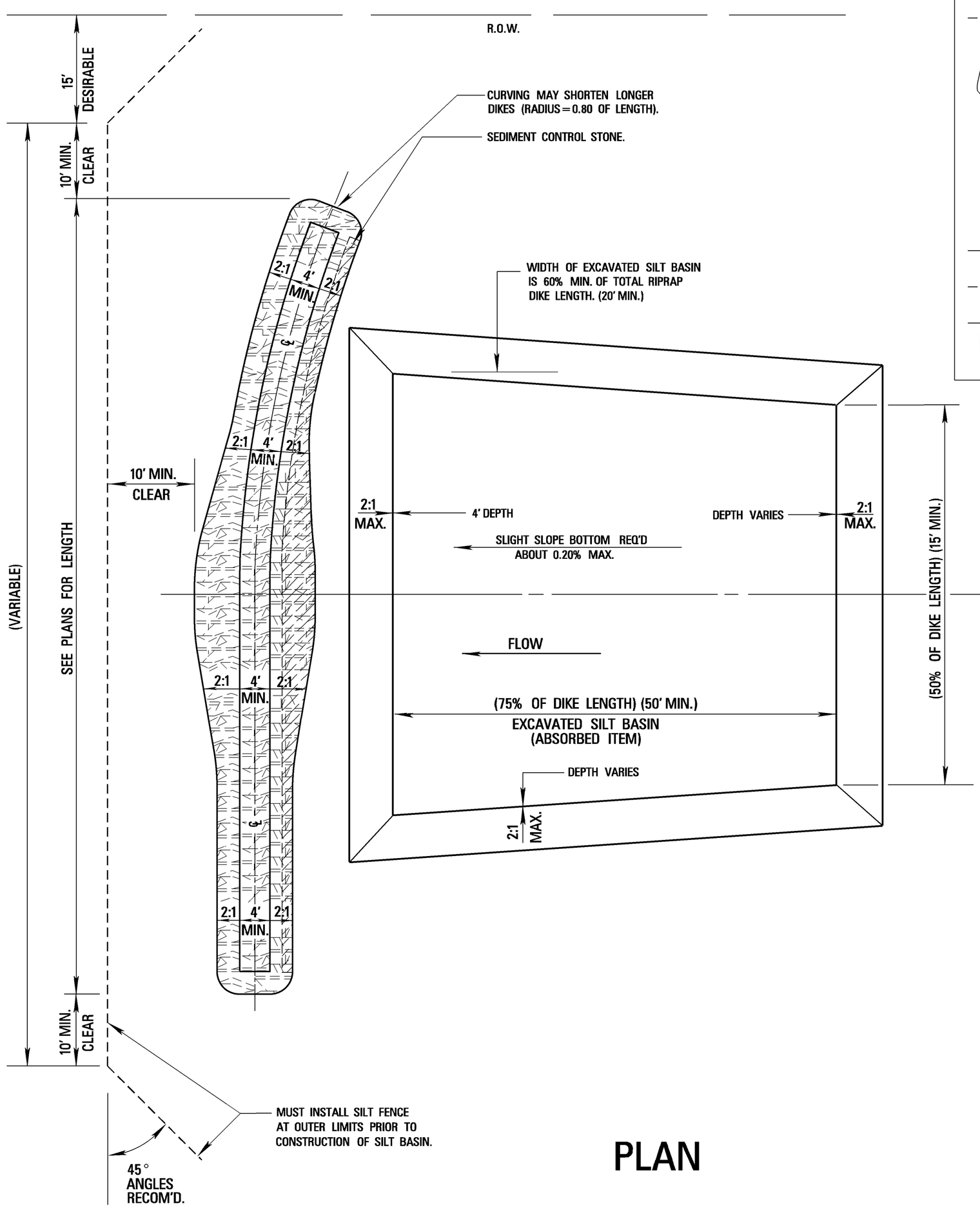

PLAN

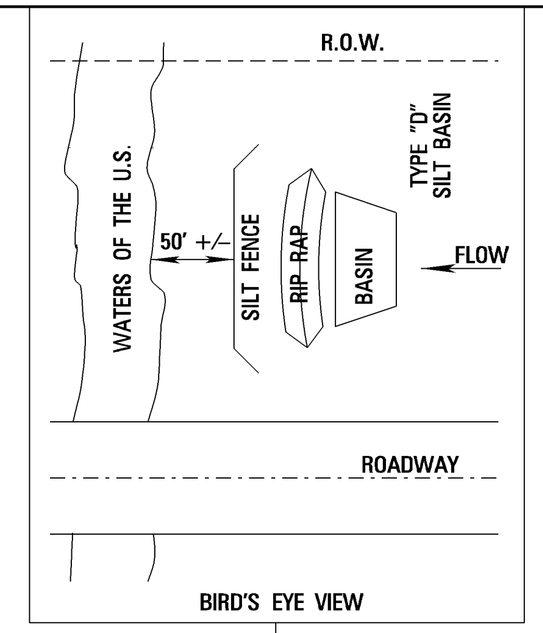

BIRD'S EYE VIEW

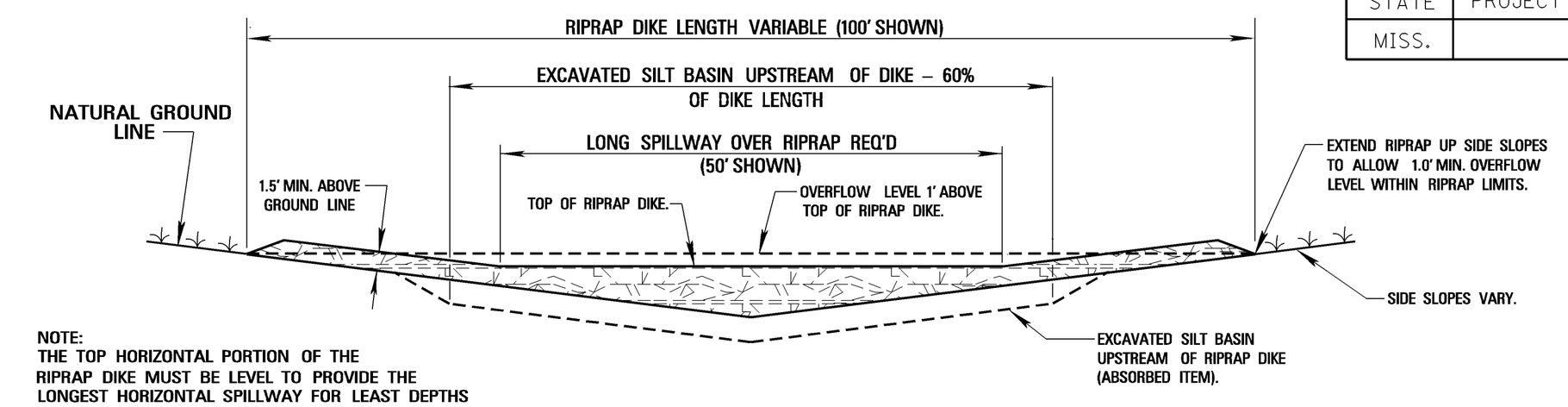

NOTE:
THE TOP HORIZONTAL PORTION OF THE RIPRAP DIKE MUST BE LEVEL TO PROVIDE THE LONGEST HORIZONTAL SPILLWAY FOR LEAST DEPTHS OF OVERFLOW (DO NOT MAKE A SPILLWAY NOTCH).

SECTION OF RIPRAP DIKE

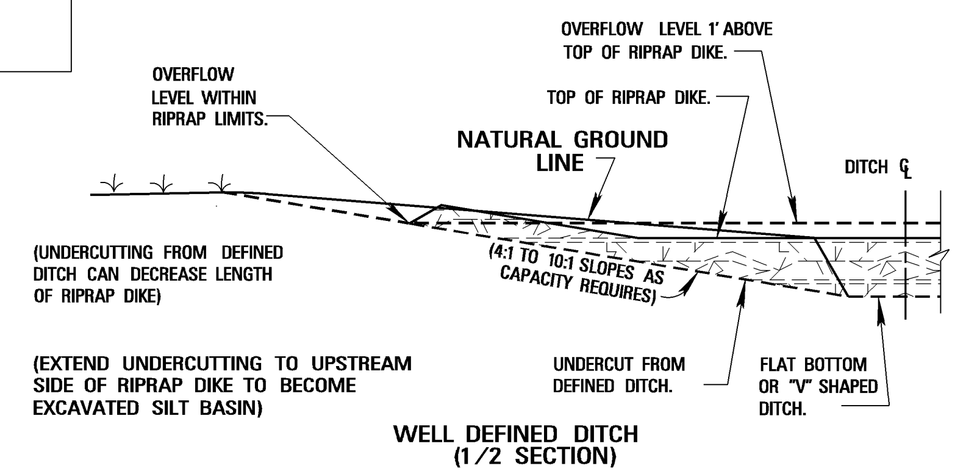

WELL DEFINED DITCH
(1/2 SECTION)

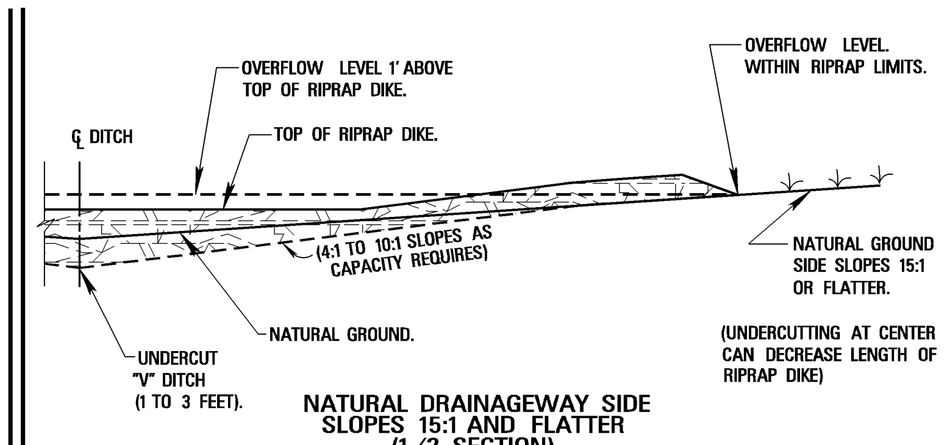

NATURAL DRAINAGEWAY SIDE SLOPES 15:1 AND FLATTER
(1/2 SECTION)

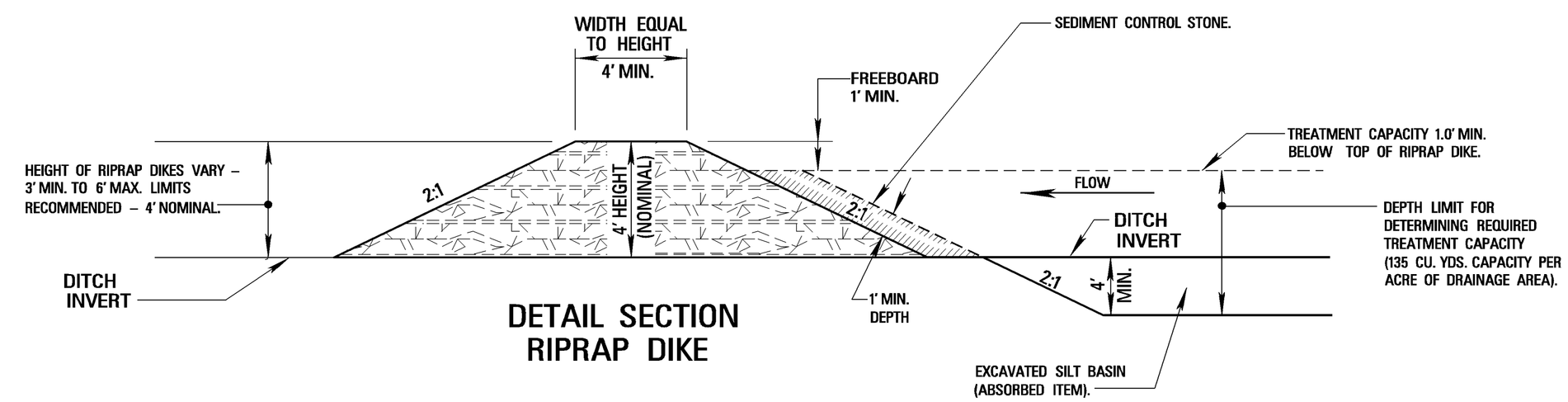

DETAIL SECTION
RIPRAP DIKE

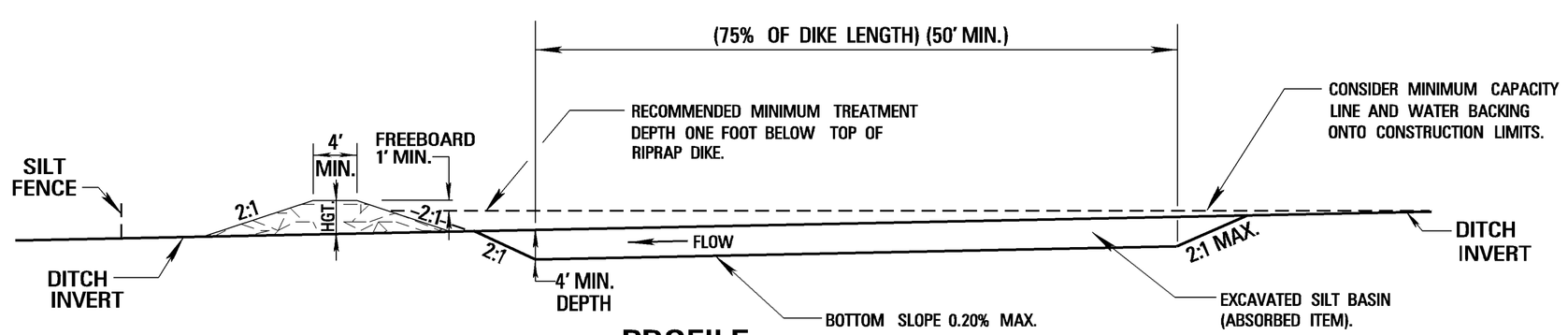

PROFILE

NOTES

1. THE REQUIRED SIZE / CAPACITY OF THE RIPRAP DIKE SILT BASIN IS TO PROVIDE AT LEAST 135 CUBIC YARDS OF VOLUME / CAPACITY PER ACRE OF DRAINAGE AREA RECEIVED. THE RIPRAP DIKE SILT BASIN MUST BE MAINTAINED AT ALL TIMES TO ASSURE THE INTENDED FUNCTION, REMOVING THE ACCUMULATED SILT ROUTINELY AND / OR WHEN APPROACHING A 50% MAXIMUM DECREASE FROM THE EFFECTIVE DESIGN CAPACITY, AND RESTORING THE BASIN TO ITS ORIGINAL EFFECTIVE DESIGN CAPACITY.

2. THE CONTRACTOR SHALL BE REQUIRED TO FURNISH ALL MATERIALS, PERFORM ALL WORK FOR THE PROPER INSTALLATION, MAINTENANCE, AND REMOVAL OF TEMPORARY EROSION CONTROL MEASURES NECESSARY TO CONTROL SILTATION.

3. AFTER THE PURPOSE FOR THE SILT BASIN HAS BEEN SERVED, THE POSTS AND SILT FENCE SHALL BE REMOVED. THE RIP RAP AND SEDIMENT STONE SHALL BE REMOVED AND PLACED AT A PIPE OUTLET. THE DISTURBED AREA SHALL BE SITE GRADED AND REVEGETATED AS DEEMED NECESSARY BY THE ENGINEER. ALL COSTS OF REMOVAL AND REPLACEMENT TO BE ABSORBED IN PAY ITEM FOR SILT BASIN.

4. RIPRAP FOR THE TYPE D SILT BASIN SHALL BE 300 LB RIPRAP AND SHALL BE PAID FOR – PER TON.

5. SEDIMENT CONTROL STONE SHALL BE SIZE NO. 57 STONE AND SHALL BE PAID FOR – PER TON.

6. THE TEMPORARY EROSION CONTROL MEASURES SHOWN ON THIS SHEET WILL ONLY BE MEASURED FOR SEPERATE PAYMENT WHEN APPROPRIATE PAY ITEMS ARE INCLUDED IN THE BID SCHEDULE OF THE PROPOSAL.

7. THE ACCUMULATED SILT SHALL BE REMOVED WHEN IT REACHES 1/3 TO 1/2 THE HEIGHT OF THE CONTROL FEATURE. SILT SHALL BE DISPOSED OF PROPERLY AND SHALL NOT BE DISPOSED OF IN THE VINCINITY OF THE EROSION CONTROL DEVICES.

DATE	REVISION	BY

MISSISSIPPI DEPARTMENT OF TRANSPORTATION

TYPICAL TEMPORARY EROSION CONTROL MEASURES (TYPE "D" SILT BASIN)

(RIPRAP DIKE SILT BASIN)
135 CU. YDS. CAPACITY PER ACRE OF DRAINAGE

PROJ. NO:
COUNTY:

WORKING NUMBER TEC-D
SHEET NUMBER

FILENAME: EROSION CONTROL\TEC-D135.DGN
DESIGN TEAM _____ CHECKED _____ DATE _____

ROADWAY DESIGN DIVISION C.A.D.D. SECTION
MISSISSIPPI DEPARTMENT OF TRANSPORTATION
688

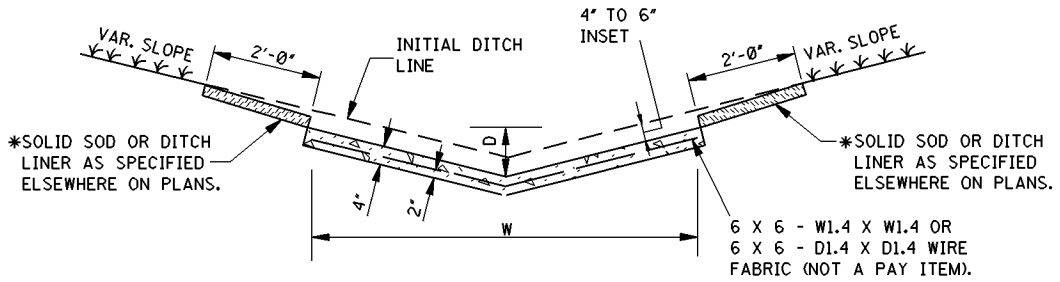

"V" TYPE SECTION

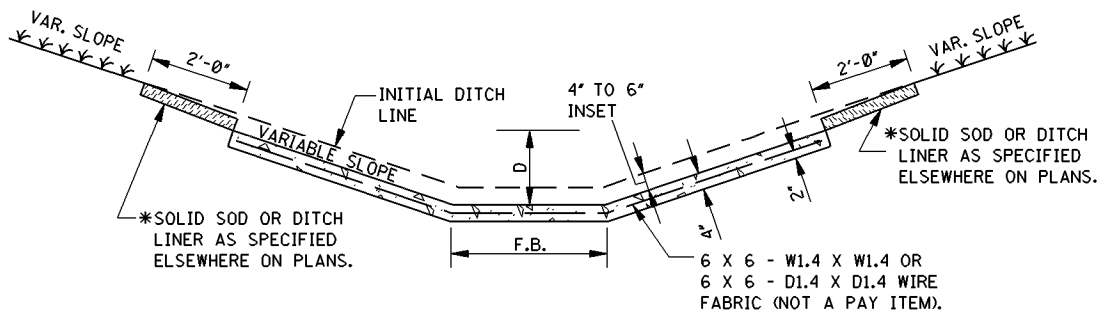

FLAT BOTTOM SECTION

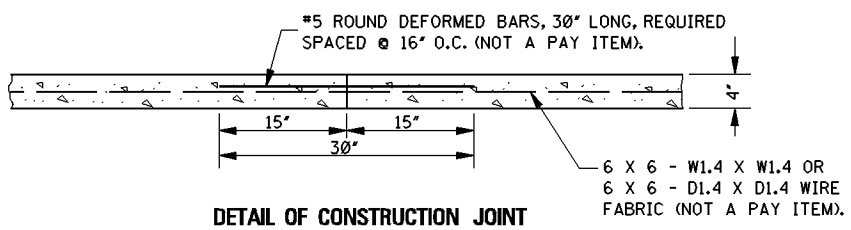

DETAIL OF CONSTRUCTION JOINT

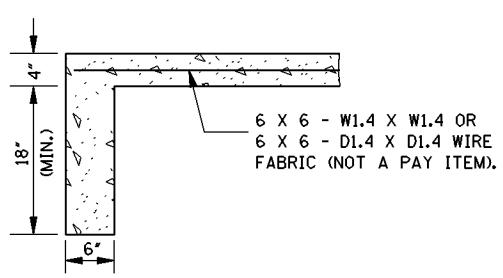

DETAIL OF TOE WALL

NOTE: TOE WALL REQUIRED UPSTREAM AND DOWNSTREAM.

CONCRETE PAVED DITCH

NOTES:

1. CONCRETE PAVED DITCHES SHALL BE GROOVED AT 20'-0" INTERVALS. THE GROOVES SHALL BE CUT TO A DEPTH OF NOT LESS THAN 1".
2. DIMENSIONS D & W ARE AS FOLLOWS:
   D(MINIMUM) = 6"
   D(NOMINAL) = 9"
   W(MINIMUM) = 24"
3. CHAIR SUPPORTS FOR THE WIRE MESH WILL NOT BE REQUIRED. HOWEVER, THE CONTRACTOR SHALL PLACE THE WIRE MESH IN A SATISFACTORY AND WORKMANLIKE MANNER TO ENSURE THAT THE FINAL POSITION IS REASONABLY NEAR THE POSITION INDICATED.

*4. CENTER ROW OF STAPLES MAY BE OMITTED ON DITCH LINER.

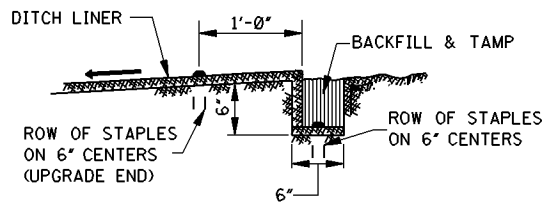

ANCHOR TRENCH DETAIL

NOTE: ANCHOR TRENCH REQUIRED AT THE BEGINNING AND ENDING OF EACH AREA TO BE COVERED, EXCEPT DOWNSTREAM END ADJOINING A STRUCTURE.

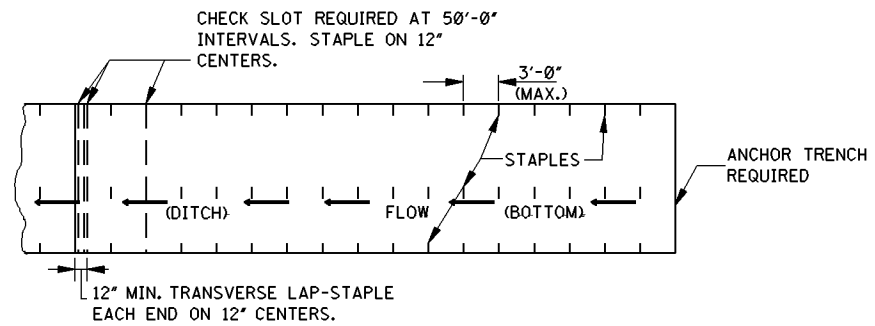

PLAN

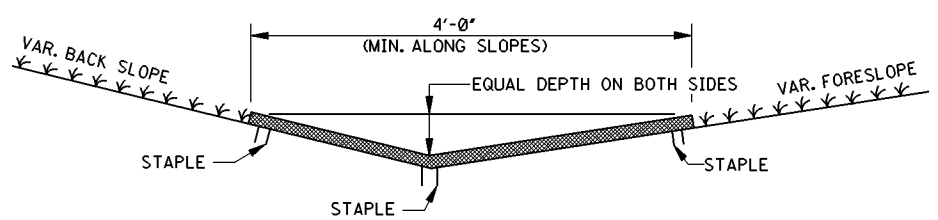

SECTION

DITCH LINER TREATMENT

(EXCELSIOR BLANKET, JUTE MESH OR EROSION CONTROL FABRIC)

NOTE: DITCHES TREATED WITH DITCH LINER WILL BE VEGETATED PRIOR TO TREATMENT, UNLESS OTHERWISE INDICATED.

STATE	PROJECT NO.
MISS.	

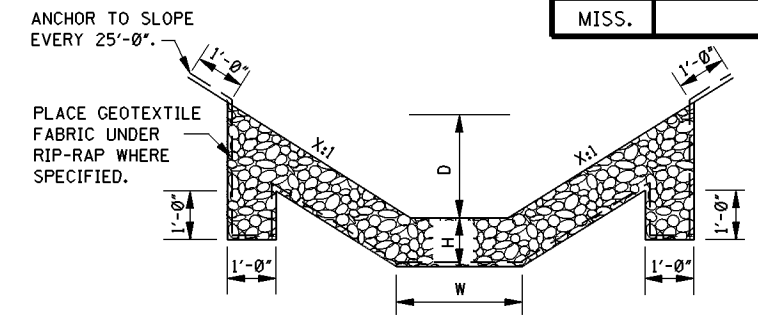

FLAT BOTTOM SECTION

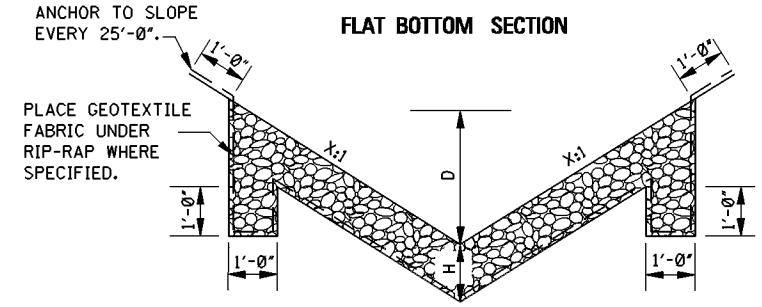

"V" TYPE SECTION

RIP-RAP TREATMENT

NOTES:

1. DIMENSIONS D, W AND X ARE VARIABLE AND ARE SHOWN ELSEWHERE ON THE PLANS.
2. THE RIP-RAP SIZE AND MINIMUM DEPTH "H" FOR RIP-RAP TREATMENT ARE AS FOLLOWS.

RIP-RAP SIZE & MINIMUM DEPTH "H"	
H (In)	RIP-RAP SIZE (lbs)
12"	100
18"	300

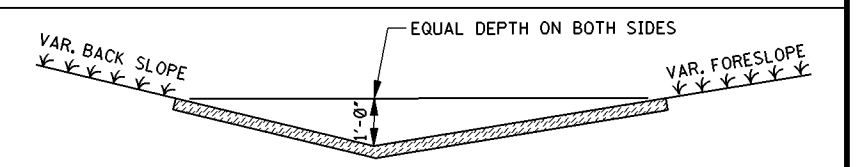

SOLID SOD TREATMENT

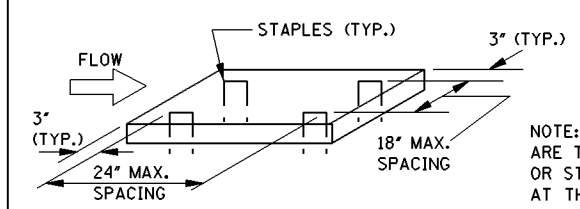

NOTE: SOLID SOD (STRIPS OR BLOCKS) ARE TO BE STAPLED, PINNED, PEGGED OR STAKED AT THE FOUR CORNERS OR AT THE MAXIMUM SPECIFIED SPACING.

GENERAL NOTE:

1. FOR LOCATION OF APPROPRIATE DITCH TREATMENTS, SEE PLAN SHEETS AS DENOTED BY THE FOLLOWING LEGEND OR AS DIRECTED BY THE ENGINEER:
   - DITCH LINER
   - SOLID SOD
   - CONCRETE PAVED DITCH
   - RIP-RAP

DATE	REVISION	BY

MISSISSIPPI DEPARTMENT OF TRANSPORTATION

DETAILS OF TYPICAL DITCH TREATMENTS

WORKING NUMBER: DT-1

SHEET NUMBER

FILENAME: EROSION CONTROL\DT-1.DGN

DESIGN TEAM ____ CHECKED ____ DATE ____

394

PLAN
ROADWAY DESIGN DIVISION
MISSISSIPPI DEPARTMENT OF TRANSPORTATION

1/20/2010 9:53 AM DT-1.DGN

STATE	PROJECT NO.
MISS.	

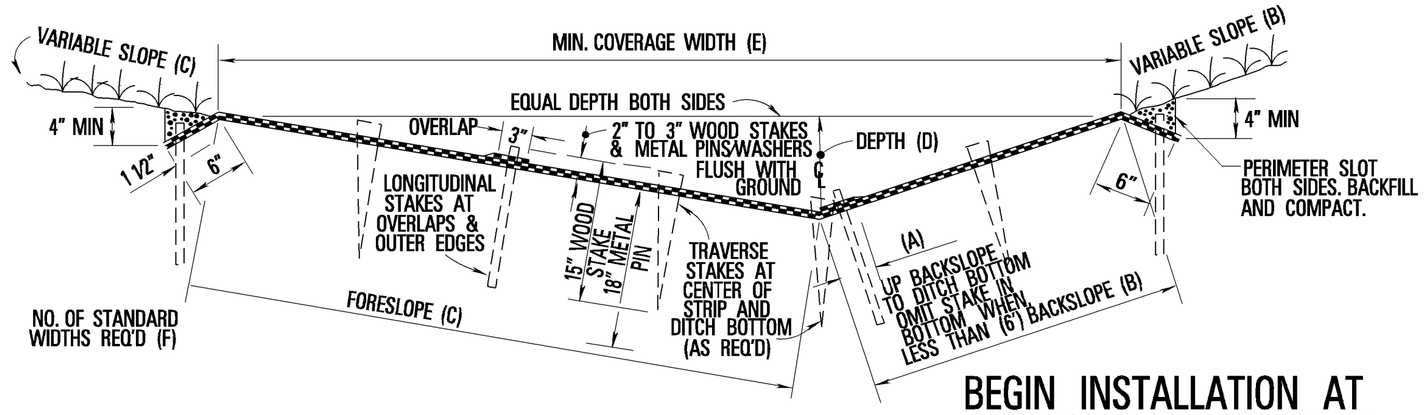

TYPICAL DITCH SECTION

MAT PLACEMENT TABLE

DIMENSIONS OF MAT PLACEMENT IN DITCH (INDIVIDUAL 38" WIDTH ROLLS)					
ELEMENTS OF MAT PLACEMENT	SIDE SLOPE COMBINATIONS FORESLOPE – BACKSLOPE				
	3:1 & 3:1	4:1 & 3:1	6:1 & 3:1	6:1 & 4:1	6:1 & 6:1
(A) UP BACKSLOPE TO DITCH BOTTOM	1′– 7″	1′– 1″	0′– 4″	0′– 10″	0′– 1 1/2″
(B) BACKSLOPE	4′– 0″	3′– 6″	2′– 9″	3′– 3″	3′– 5 1/2″
(C) FORESLOPE	4′– 0″	4′– 6″	5′– 3″	4′– 9″	5′– 5 1/2″
(D) DEPTH OF COVERAGE	1′– 3″	1′– 1″	0′– 10″	0′– 9″	0′– 11″
(E) WIDTH OF COVERAGE	7′– 7″	7′– 8″	7′– 9″	7′– 10″	10′– 9″
(F) MINIMUM NUMBER OF STAND. WIDTH STRIPES	3	3	3	3	4
(B) + (C) TOTAL COVERAGE ON SLOPES	8′– 0″	8′– 0″	8′– 0″	8′– 0″	10′– 11″
SQ. YDS./LIN. FT.	0.89	0.89	0.89	0.89	1.22
MULTI– WIDTH WELDED SEAM MAT (WELDED 38" WIDTH STRIPS)					
(B) + (C) TOTAL COVERAGE MULTI–WIDTH ROLLS	8′– 3″	8′– 3″	8′– 3″	8′– 3″	11′– 3 1/2″
SQ. YDS./LIN. FT.	0.92	0.92	0.92	0.92	1.25

GENERAL INSTRUCTIONS

1. BEGIN INSTALLATION AT DOWNSTREAM TERMINAL AND PROGRESS UPSTREAM.
2. FIRST ROLL IS ALIGNED FROM DITCH BOTTOM UP BACKSLOPE (SEE MAT PLACEMENT TABLE) AND UNDER MODERATE TENSION TEMPORARILY STAKED TO MAINTAIN PROPER DESIGN COVERAGE ALIGNMENT.
3. WORKING OUTWARD FROM DITCH BOTTOM TO EDGES, SUBSEQUENT ADJACENT ROLLS FOLLOW IN STAGGERED SEQUENCE UNDER MODERATE TENSION.
4. OVERLAP MAT SEAMS 3 INCHES AND STAKE AT 3 FOOT INTERVALS WITH STAKES ALIGNED LONGITUDINALLY TO DITCH AND DIAGONAL EDGE OF STAKE TO THE UPSTREAM. OUTER EDGES (PERIMETER) OF MAT ARE STAKED SIMILARLY.
5. STAKE THE CENTER OF EACH MAT STRIP AND WHEN REQUIRED ALONG THE DITCH BOTTOM AT 6 – FOOT INTERVALS STAGGERED BETWEEN THE 3 – FOOT SPACING OF OVERLAP AND OUTER EDGE STAKES WITH THE BROADSIDE TO THE FLOW DIRECTION AND DIAGONAL EDGE TOWARD THE UPSLOPE.
6. USE 3 – FOOT OVERLAP AT END OF MAT ROLL SPLICES WITH UPGRADE STRIP ON TOP, STAKED IN TWO ROWS 30 INCHES APART, AND STAKES 18 INCHES APART ACROSS FULL WIDTH.
7. TRANSERSE CHECK SLOTS 6 – INCH WIDTH BY 9 – INCH DEPTH ARE EXCAVATED AT 25 – FOOT INTERVALS WITH STAKES 12 INCHES APART FULL WIDTH OF TREATMENT, WELDED SEAM MULTI–WIDTH MAT WILL HAVE SIMILAR TRANSVERSE CHECKS OMITTING EXCAVATED SLOT ONLY.
8. END INSTALLATION AT UPSTREAM TERMINAL. TEMPORARILY STAKING MAY BE PLACED TO BECOME PART OF PERMANENT STAKING PATTERN.

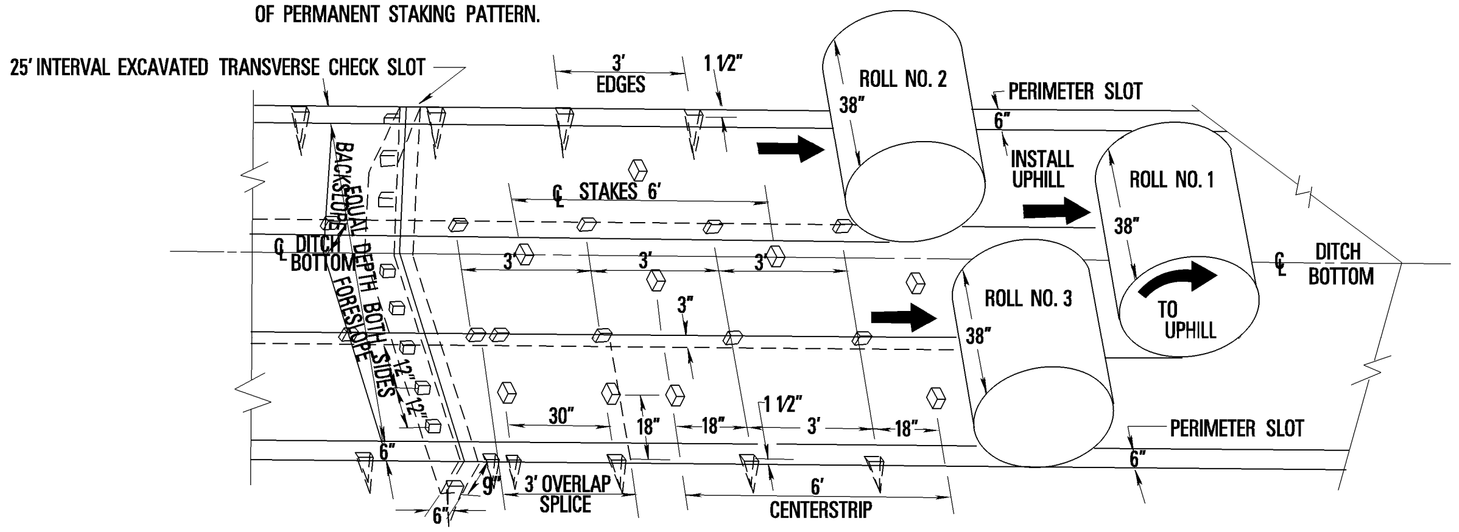

SEQUENTIAL ROLL RUN OUT IN DITCH WITH STAKING DETAIL

BEGIN INSTALLATION AT DOWNSTREAM TERMINAL

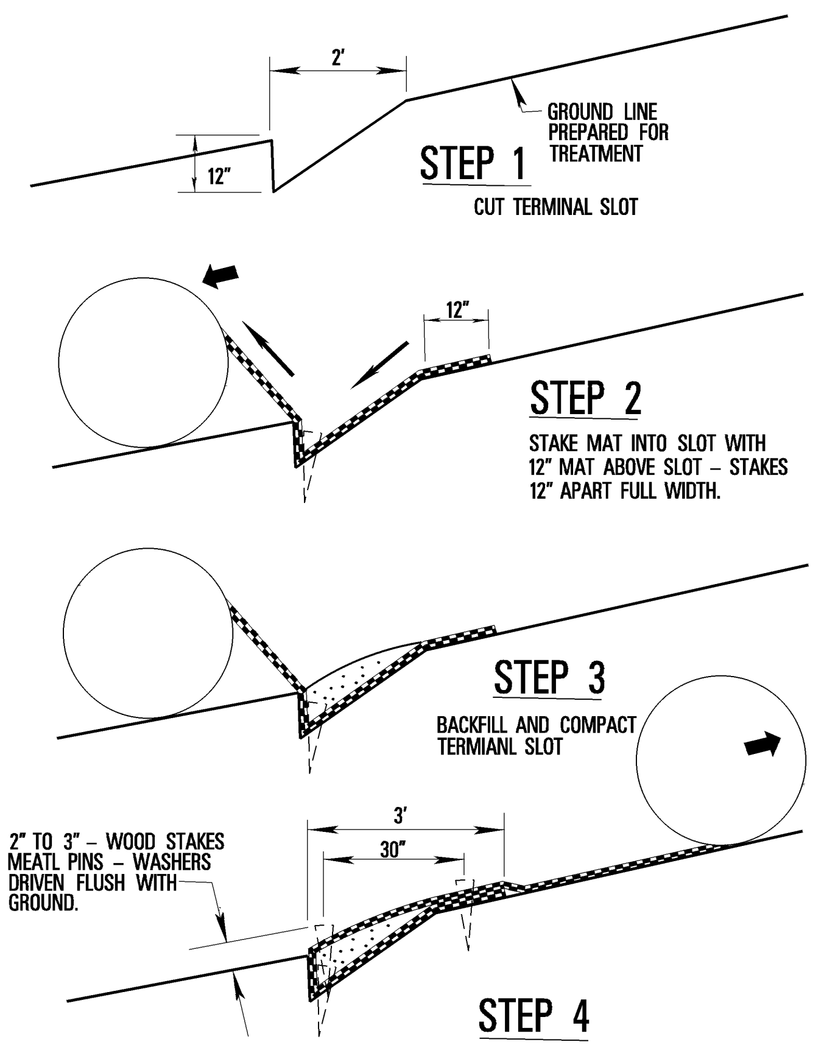

A. ROLL MAT UPSTREAM OVER BACKFILLED TERMINAL.
B. STAKE MAT DOWN TO ANCHOR TERMINAL, 18" APART ACROSS IN 2 ROWS.
C. PROGRESS UPSTREAM WITH ROLL.

25 – FOOT INTERVAL TRANSVERSE CHECK SLOT (FOR INDIVIDUAL ROLLS*)

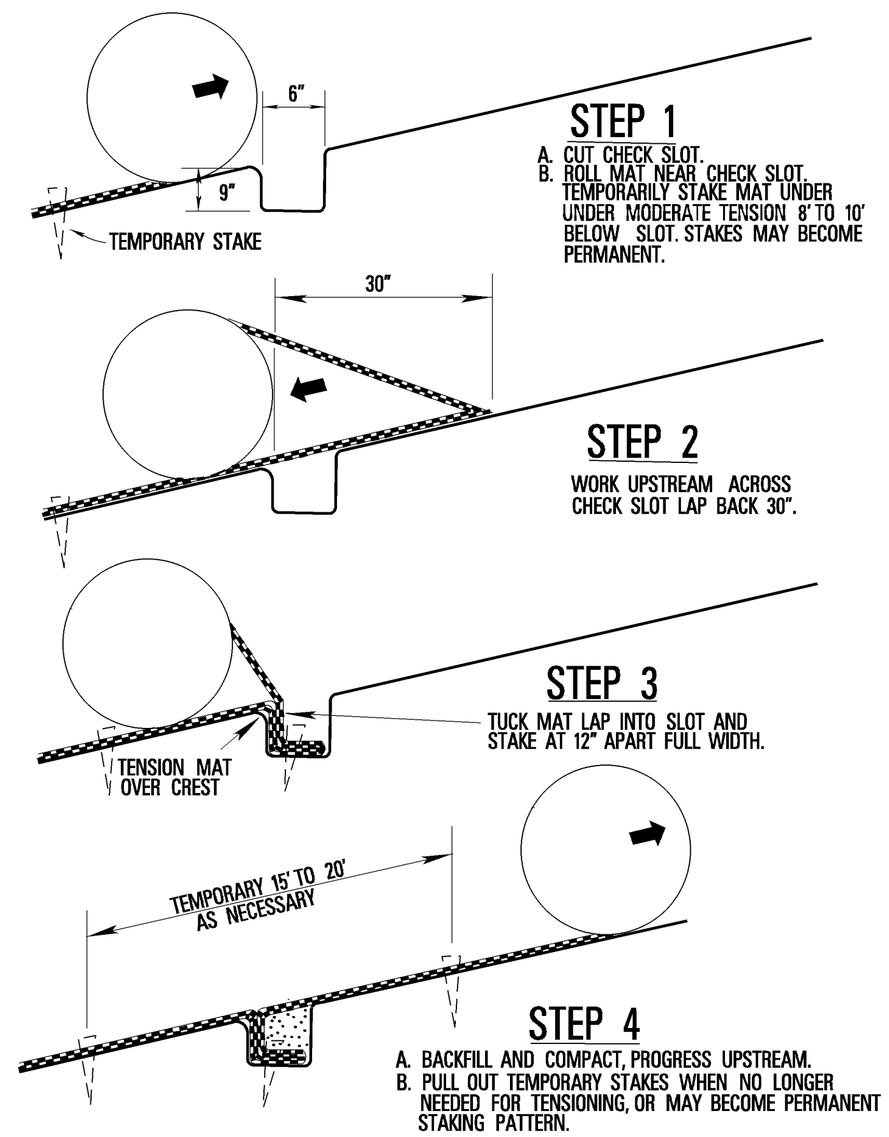

STEP 1
A. CUT CHECK SLOT.
B. ROLL MAT NEAR CHECK SLOT. TEMPORARILY STAKE MAT UNDER UNDER MODERATE TENSION 8' TO 10' BELOW SLOT. STAKES MAY BECOME PERMANENT.

STEP 4
A. BACKFILL AND COMPACT, PROGRESS UPSTREAM.
B. PULL OUT TEMPORARY STAKES WHEN NO LONGER NEEDED FOR TENSIONING, OR MAY BECOME PERMANENT STAKING PATTERN.

* WHEN MULTI–WIDTH (WELDED SEAM) ROLLS ARE USED, OMIT EXCAVATED CHECK SLOT AND REPLACE WITH A ROW OF STAKES ONE (1) FOOT APART AT 25 – FOOT INTERVALS (SEE DETAILS). TEMPORARY STAKES NOT REQUIRED.

END INSTALLATION AT UPSTREAM TERMINAL

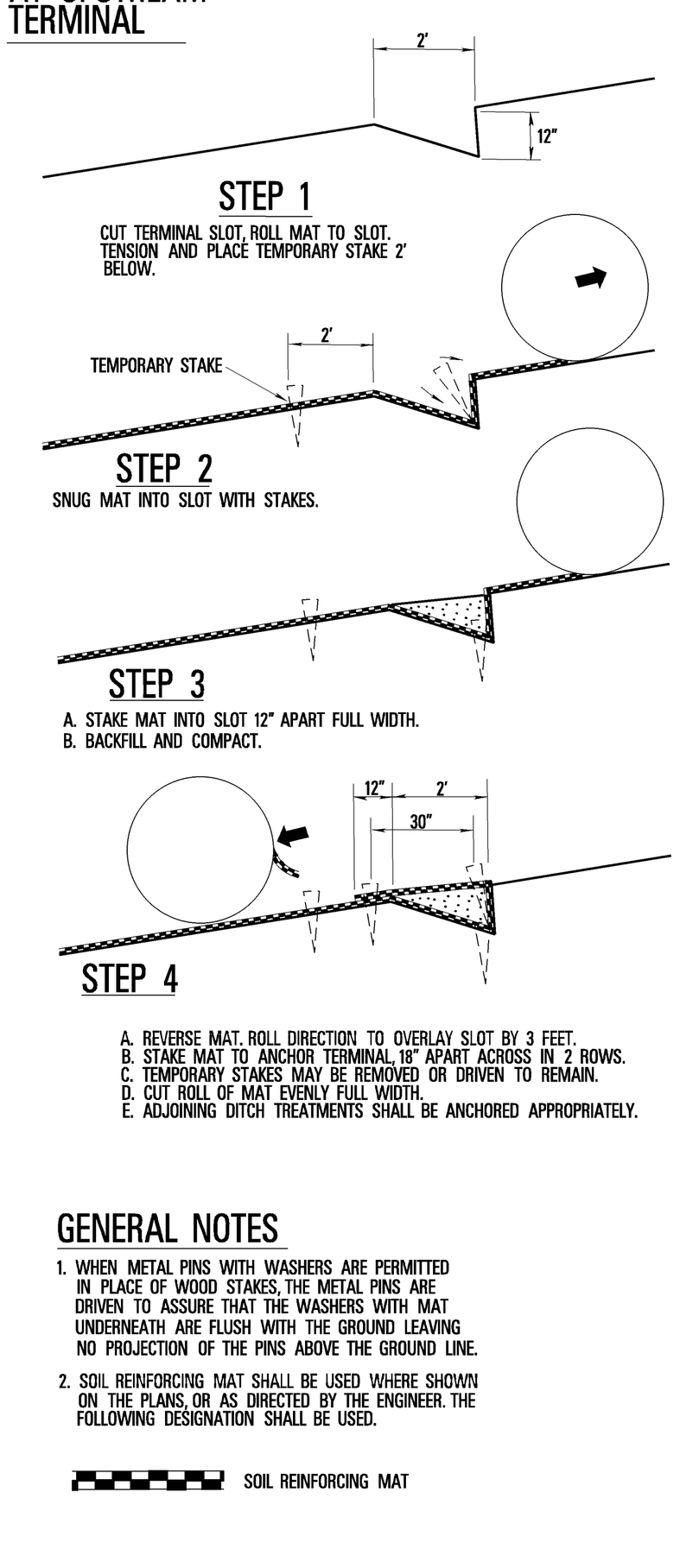

STEP 3
A. STAKE MAT INTO SLOT 12" APART FULL WIDTH.
B. BACKFILL AND COMPACT.

STEP 4
A. REVERSE MAT. ROLL DIRECTION TO OVERLAY SLOT BY 3 FEET.
B. STAKE MAT TO ANCHOR TERMINAL, 18" APART ACROSS IN 2 ROWS.
C. TEMPORARY STAKES MAY BE REMOVED OR DRIVEN TO REMAIN.
D. CUT ROLL OF MAT EVENLY FULL WIDTH.
E. ADJOINING DITCH TREATMENTS SHALL BE ANCHORED APPROPRIATELY.

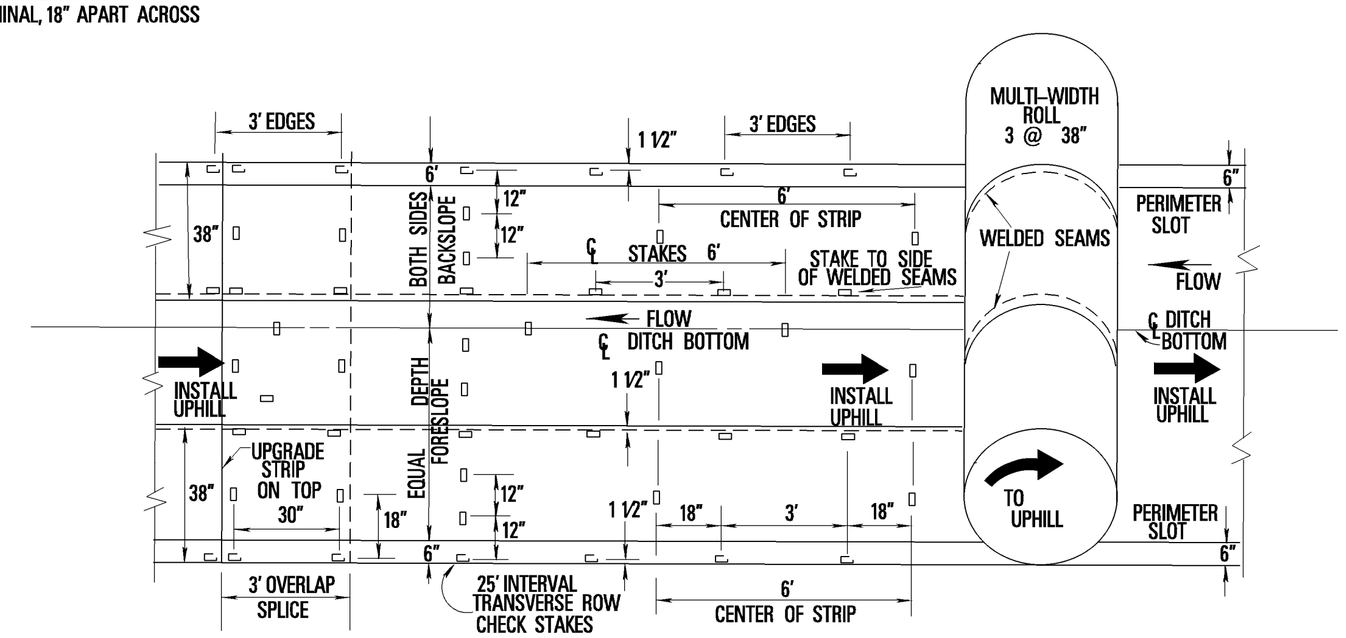

MULTI–WIDTH WELDED SEAM MAT RUN OUT IN DITCH WITH STAKING DETAIL

GENERAL NOTES

1. WHEN METAL PINS WITH WASHERS ARE PERMITTED IN PLACE OF WOOD STAKES, THE METAL PINS ARE DRIVEN TO ASSURE THAT THE WASHERS WITH MAT UNDERNEATH ARE FLUSH WITH THE GROUND LEAVING NO PROJECTION OF THE PINS ABOVE THE GROUND LINE.
2. SOIL REINFORCING MAT SHALL BE USED WHERE SHOWN ON THE PLANS, OR AS DIRECTED BY THE ENGINEER. THE FOLLOWING DESIGNATION SHALL BE USED.

SOIL REINFORCING MAT

DATE	REVISION	BY

MISSISSIPPI DEPARTMENT OF TRANSPORTATION

DITCH TREATMENT INSTALLATION DETAIL FOR SOIL REINFORCING MAT

WORKING NUMBER DT-1A

SHEET NUMBER

FILENAME: erosion control\dt-1a.dgn

DESIGN TEAM b.w. CHECKED _____ DATE _____

8/16/2010 9:37 AM DT-1A.DGN
MISSISSIPPI DEPARTMENT OF TRANSPORTATION ROADWAY DESIGN DIVISION
395

STATE	PROJECT NO.
MISS.	

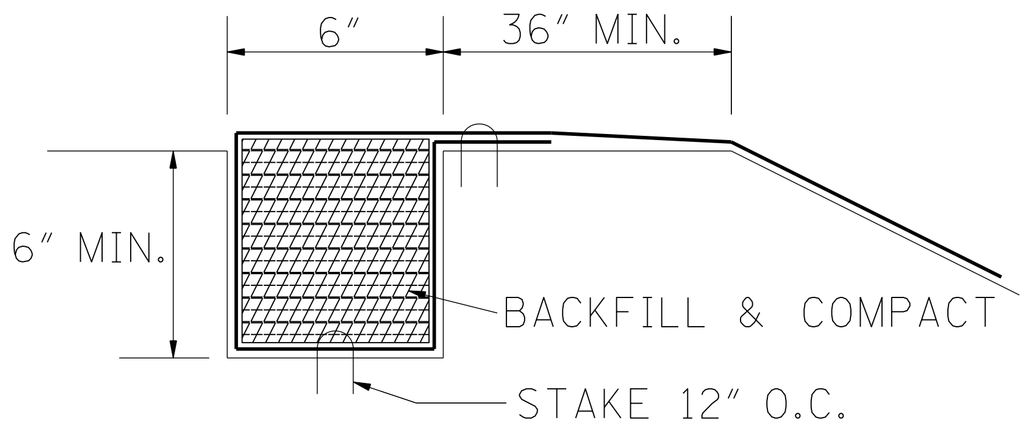

DETAIL OF TOP TRENCH

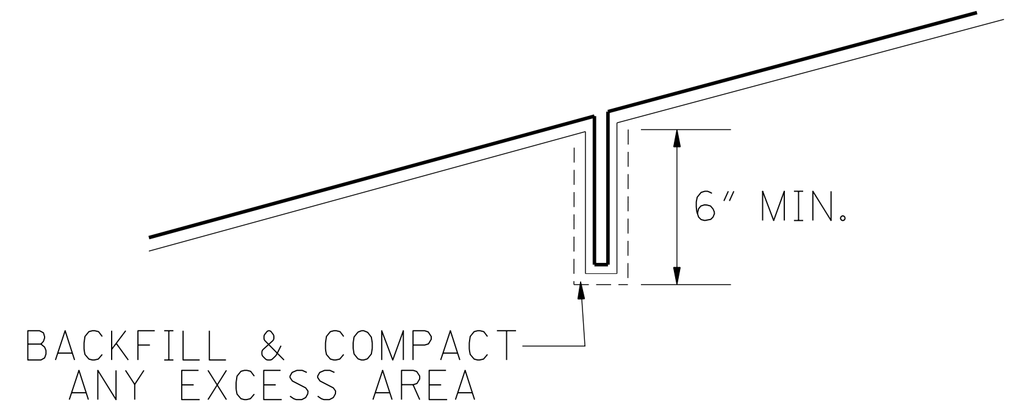

DETAIL OF INTERMEDIATE TRENCH

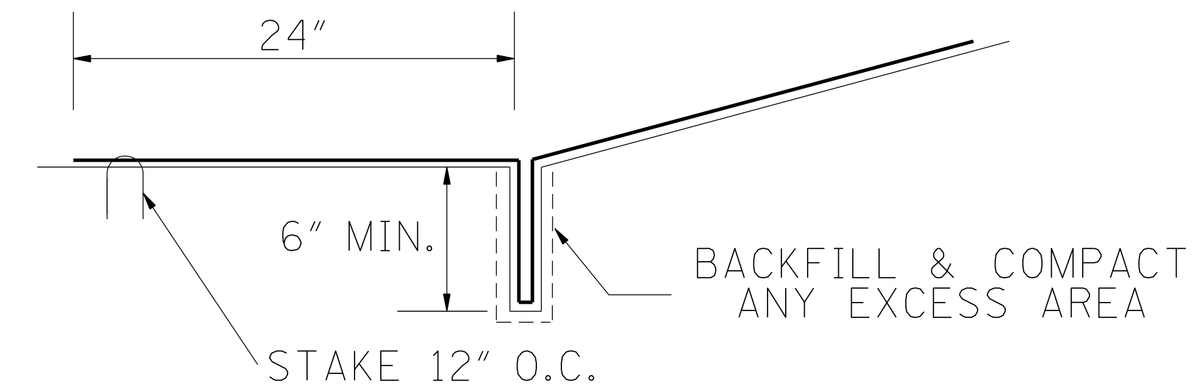

DETAIL OF BOTTOM TRENCH

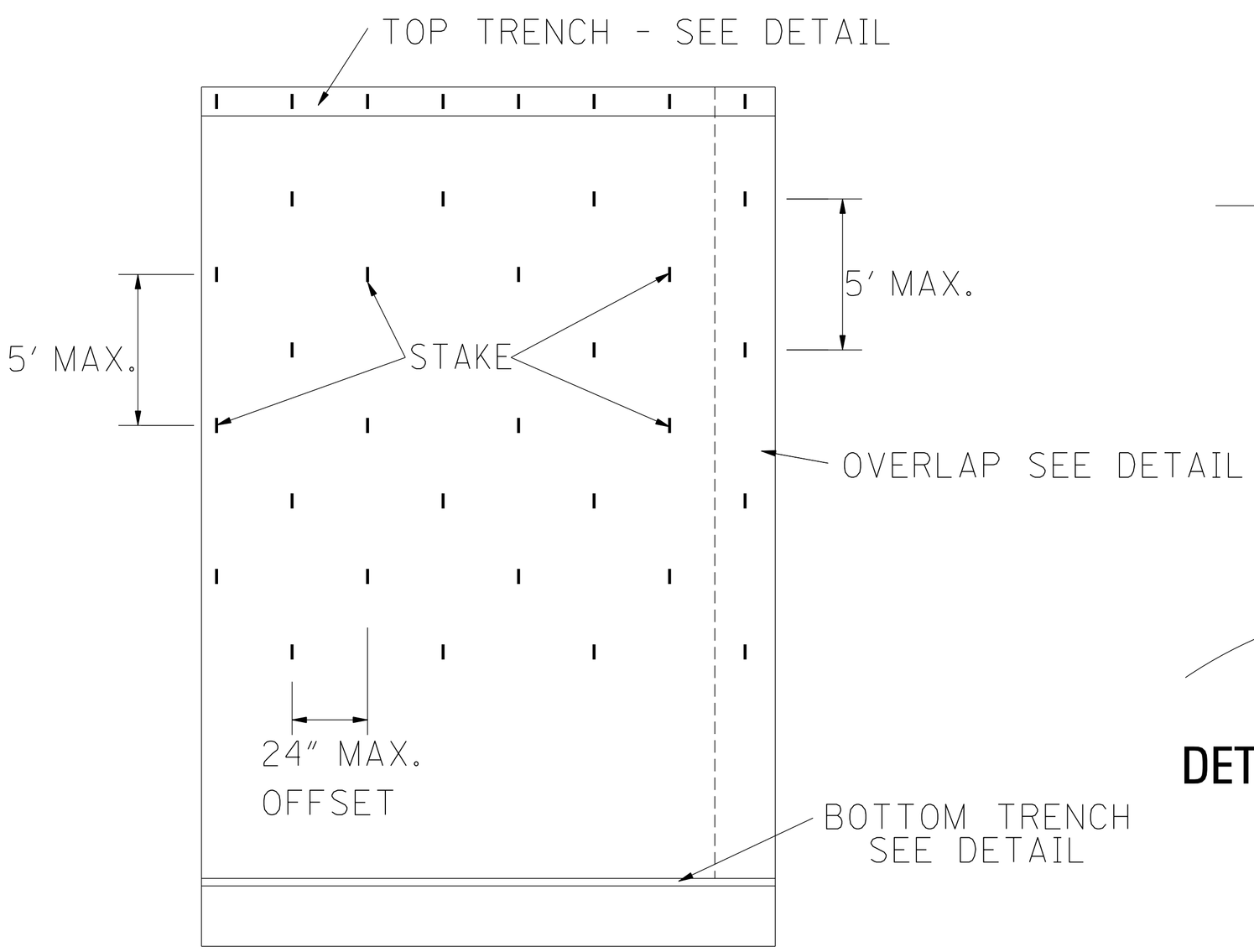

DETAIL OF EROSION CONTROL BLANKET

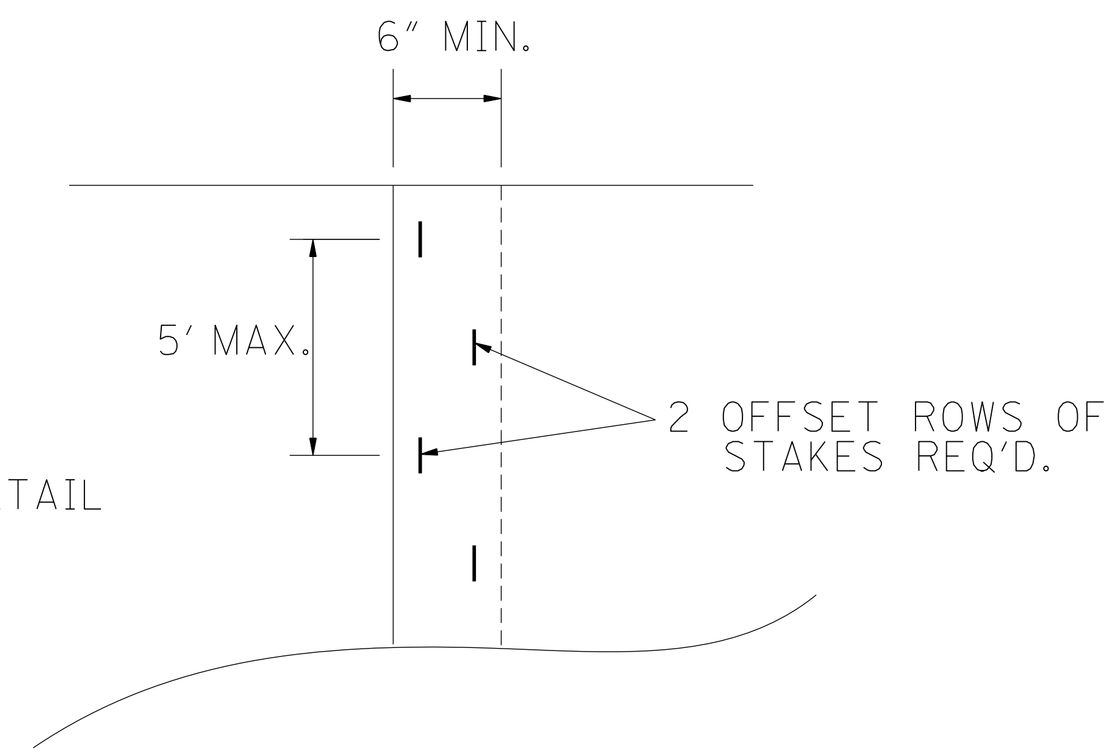

DETAIL OF LONGITUDINAL OVERLAP

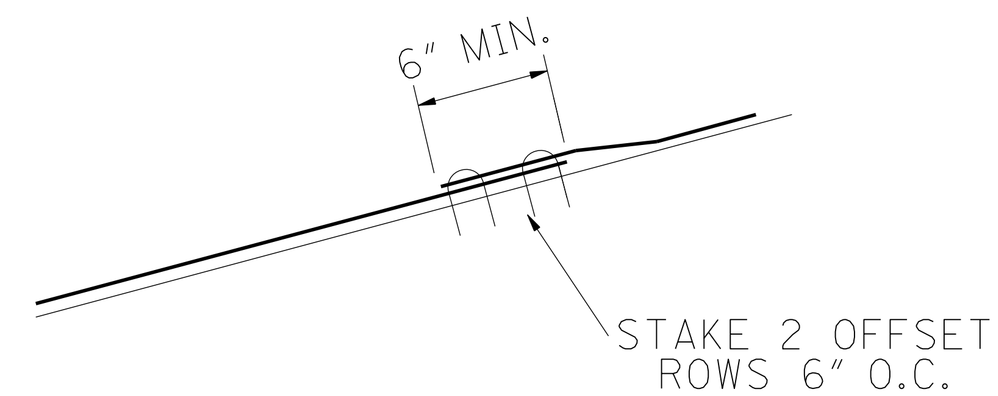

DETAIL OF TRANSVERSE OVERLAP

DATE	REVISION	BY	MISSISSIPPI DEPARTMENT OF TRANSPORTATION
			EROSION CONTROL BLANKET
			WORKING NUMBER
			SHEET NUMBER
			FILENAME: EROSION BLANKET.DGN
			DESIGN TEAM ____ CHECKED ____ DATE 04/07/11

10/4/2011 9:29 AM EROSION BLANKET.DGN
ROADWAY DESIGN DIVISION
MISSISSIPPI DEPARTMENT OF TRANSPORTATION