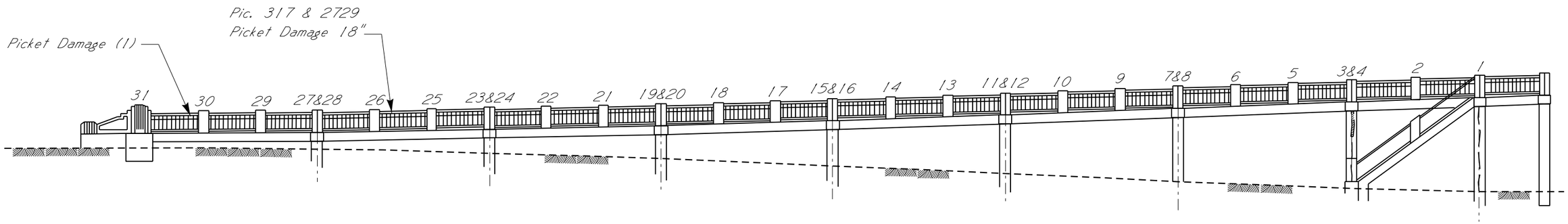

RETAINING WALL ELEVATION - NORTH SIDE

Looking South

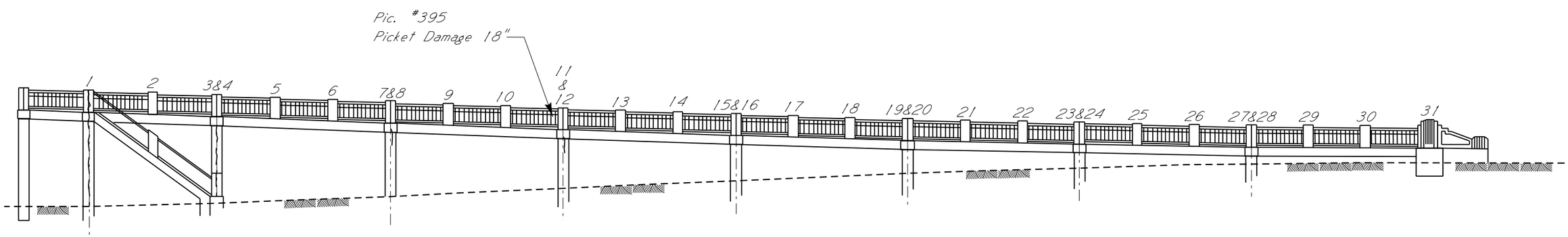

RETAINING WALL ELEVATION - SOUTH SIDE

Looking North

EAST APPROACH RETAINING WALLS

LOCATION: North Retaining Wall

Member	Comments	Photo No.	Looking
Post 1	No damage @ post - Cracking in outside stair retaining wall joint - 2"x4"x14'	313	S
Post 2	Minor cracking in top of post		
Post 3 & Post 4	No damage @ post - cracking and large spall area with exposed rebar near top of wall - 6"x7"x4'	314 315	S S
	No damage @ post - heavy cracking w/ large potential spall area near bottom of wall - 6"x7"x6'	316	S
	1½" horiz. wall misalignment for full wall height and posts; Post 4 and east wall have shifted 1½" north		
Post 5	No damage		
Post 6	No damage		
Post 7 & Post 8	No damage	2721	W
	Cracking in south and east sides near bottom rail connection		
Post 9	Old repair at top NW corner; cracking at west side top and bottom rail connections	2722 2723	E E
Post 10	Minor cracking in top of post		
Post 11 & Post 12	No damage		
	No damage		
Post 13	No damage		
Post 14	No damage		
Post 15 & Post 16	No damage		
	No damage		

LOCATION: North Retaining Wall

Member	Comments	Photo No.	Looking
Post 17	Minor cracking in top of post		
Post 18	Minor cracking in top of post		
Post 19 & Post 20	No damage	2724	W
	Post is leaning approx. 1" north at top with a gap between the post and sidewalk on the south side		
Post 21	Cracking in top and on west and south sides near top rail connection	2725	E
Post 22	Old spall with exposed rebar at east top rail connection	2726	W
Post 23 & Post 24	No damage	2727 319	W S
	Minor cracking on east side near top rail connection; heavy cracking with spalling on east side near bottom rail connection		
Post 25	Crack with minor spalling in top NW corner extending thru west top rail connection	2728 318	E S
Post 26	Minor cracking in top of post		
Post 27 & Post 28	No damage		
	Minor cracking in top of post		
Post 29	Minor cracking in top of post		
Post 30	Heavy previous damage at bottom with poor repair on south side; cracking at both bottom rail connections; minor cracking in top of post	2730 2731	NE NW
Post 31	No damage		
Steel Rail	Picket damage 18" (3 pickets)	317 2729	S N
Steel Rail	Picket damage (1 picket)		

LOCATION: South Retaining Wall

Member	Comments	Photo No.	Looking
Post 1	Widespread cracking on inside stair wall post; large spall on bottom NE corner with exposed rebar	242 394	SW S
	Widespread cracking on inside stair wall post; large spall on bottom SE corner with exposed rebar	243	NW
	Crack in outside stair retaining wall - 3"x4"x12'	309	N
	2½" horizontal wall misalignment at outside stair wall for full wall height and posts		
Post 2	Small crack in top of post		
Post 3 & Post 4	3" horiz. wall misalignment for full wall height and posts; Post 4 and east wall have shifted 3" south		
	Vertical crack/spall for full wall height - 3"x3"x10'	310	N
Post 5	Crack across top extends down north & south faces	2717	S
Post 6	No damage		
Post 7 & Post 8	No damage @ post - Cracking near top of wall - 2"x3"x2'	311	N
	No damage @ post - Spalling for most of wall height		
Post 9	No damage		
Post 10	No damage		
Post 11 & Post 12	No damage @ post - Cracking near top of wall - 2"x4"x2'	312	N
	No damage @ post - Spalling near top of wall - 2"x4"x2'		
Post 13	No damage		
Post 14	No damage		

LOCATION: South Retaining Wall

Member	Comments	Photo No.	Looking
Post 15 & Post 16	No damage @ post - Cracking near top of wall - 2"x4"x2'	2719	N
	No damage @ post - Spalling near top of wall - 2"x4"x2'		
Post 17	No damage		
Post 18	Large crack across top extends down north & south faces; crack at east side top rail connection	246 396 2718	S S W
Post 19 & Post 20	No damage		
	No damage		
Post 21	No damage		
Post 22	No damage		
Post 23 & Post 24	No damage		
	No damage		
Post 25	No damage		
Post 26	No damage		
Post 27 & Post 28	No damage		
	No damage		
Post 29 Post 30	No damage		
Post 31	No damage		
Steel Rail	Picket damage 18" (3 pickets)	395	S