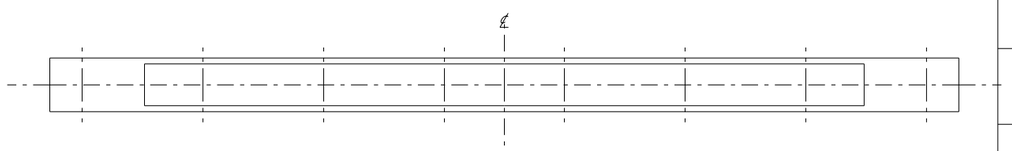

PLAN

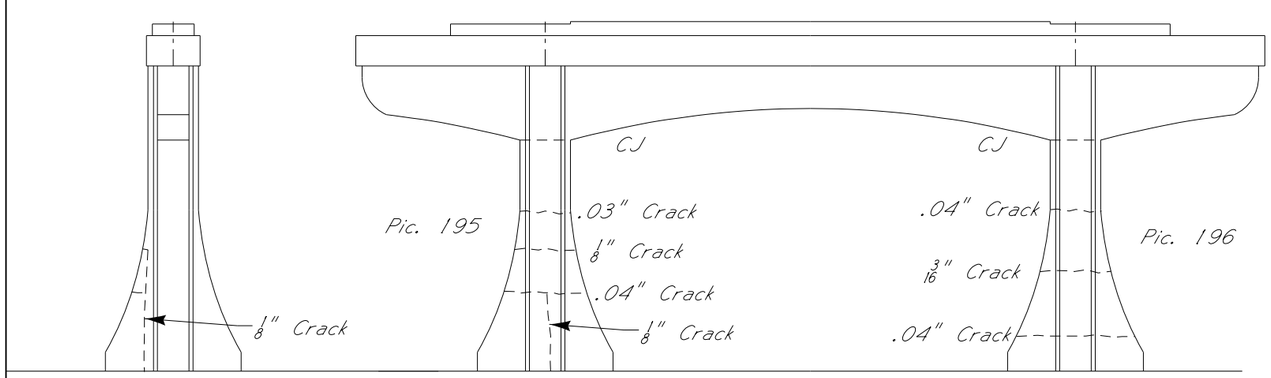

END ELEVATION

ELEVATION BENT 2

Looking East

Member	Comments	Photo No.	Looking
N. Col.	Cracks in N. Col. on West Face	195	E
S. Col.	Cracks in S. Col. on West Face	196	E
Bent 2	Overall Picture of Bent 2	2746	W

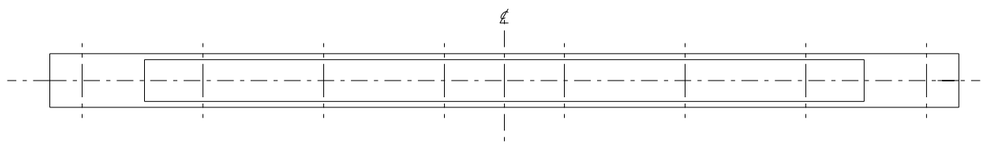

PLAN

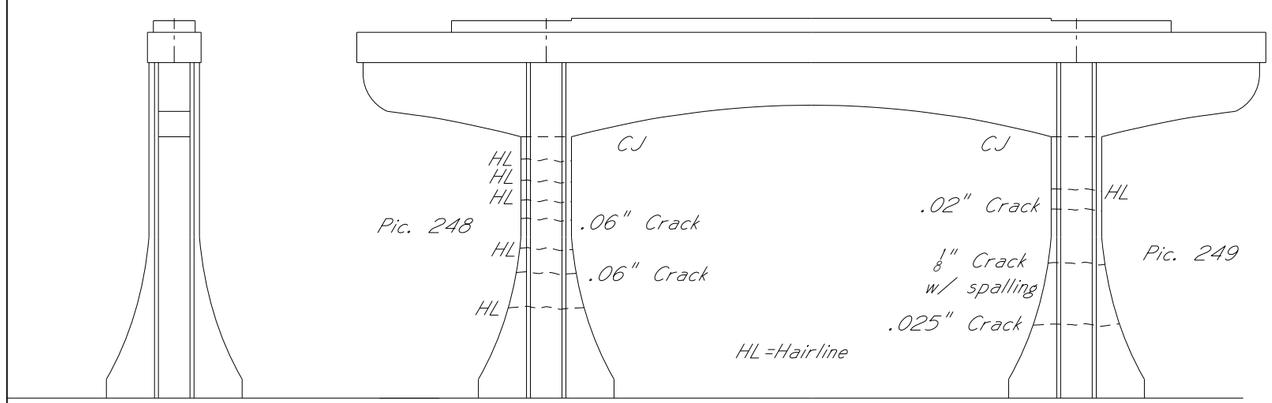

END ELEVATION

ELEVATION BENT 3

Looking East

Member	Comments	Photo No.	Looking
N. Col.	Cracks in N. Col. on West Face	248	E
S. Col.	Cracks in S. Col. on West Face	249	E
Bent 3	Overall Picture of Bent 3	2747	E

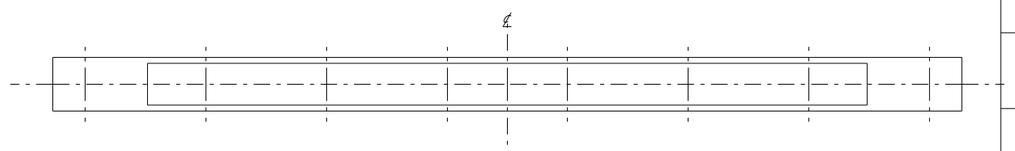

PLAN

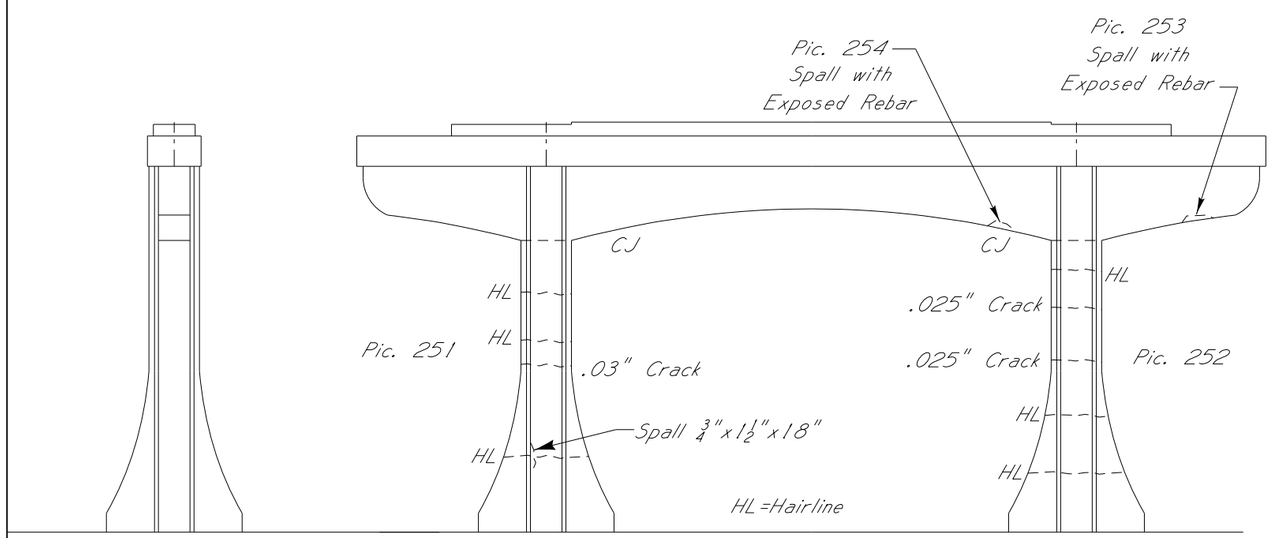

END ELEVATION

ELEVATION BENT 4

Looking East

Member	Comments	Photo No.	Looking
Bent 4	Overall Picture of Bent 4	250	E
N. Col.	Cracks/Spalls in N. Col. on West Face	251	E
S. Col.	Cracks in S. Col. on West Face	252	E
S. Overhang	Exposed Rebar on South Face of Overhang	253	E
Cap	Exposed Rebar on West Face of Arch	254	E

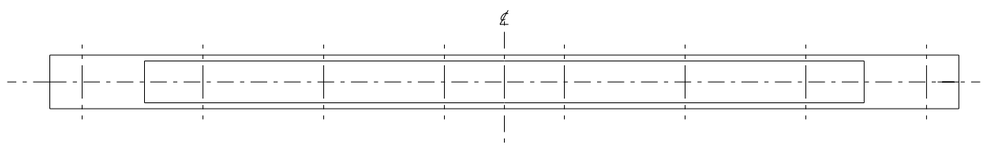

PLAN

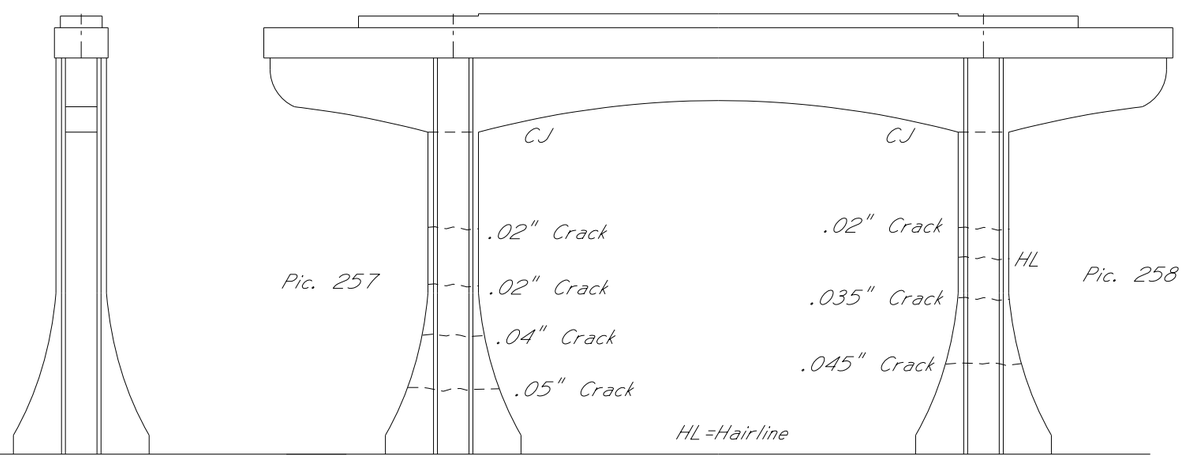

END ELEVATION

ELEVATION BENT 5
Looking East

Member	Comments	Photo No.	Looking
Bent 5	Overall Picture of Bent 5	256	E
N. Col.	Cracks in N. Col. on West Face	257	E
S. Col.	Cracks in S. Col. on West Face	258	E

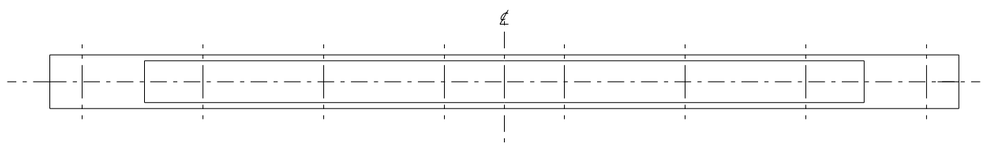

PLAN

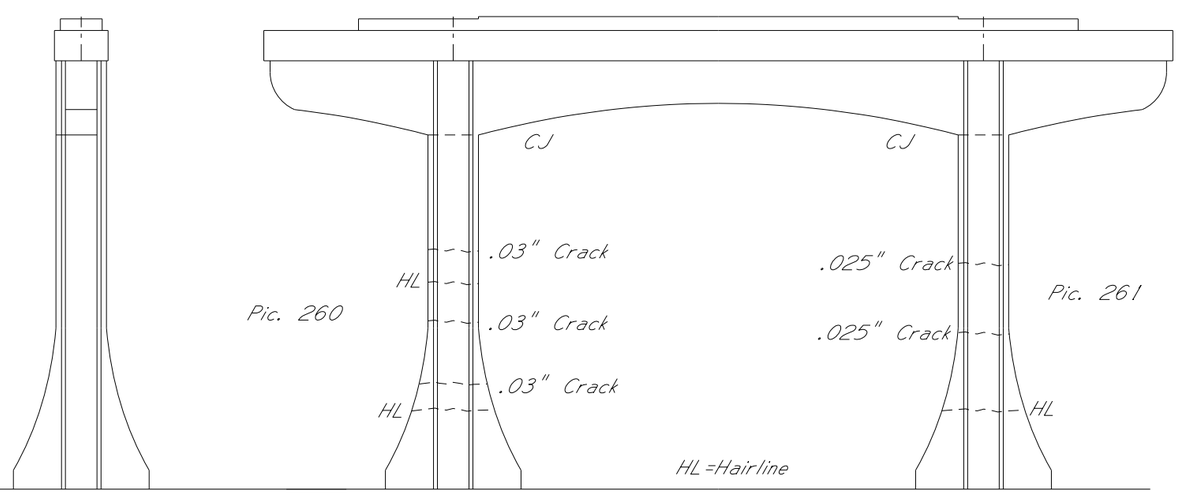

END ELEVATION

ELEVATION BENT 6

Looking East

Member	Comments	Photo No.	Looking
Bent 6	Overall Picture of Bent 6	259	W
N. Col.	Cracks in N. Col. on West Face	260	E
S. Col.	Cracks in S. Col. on West Face	261	E

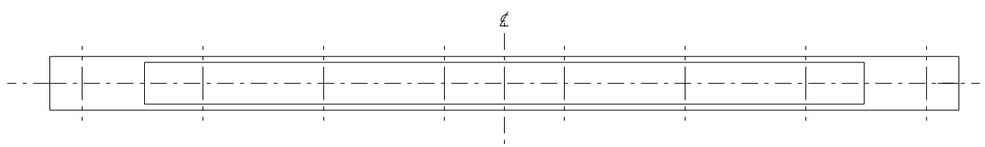

PLAN

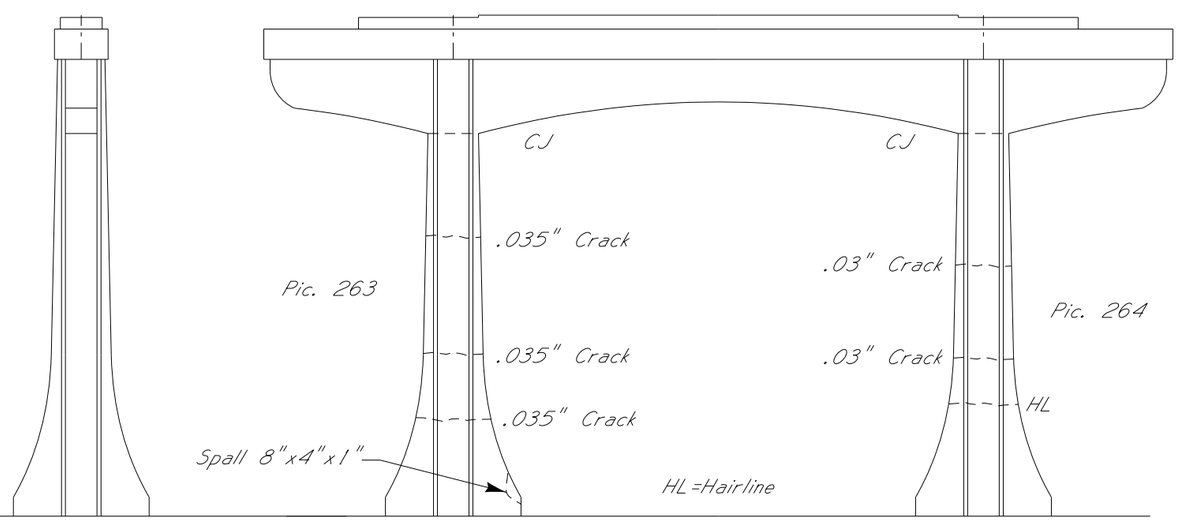

END ELEVATION

ELEVATION BENT 7

Looking East

Member	Comments	Photo No.	Looking
Bent 7	Overall Picture of Bent 7	262	SE
N. Col.	Cracks in N. Col. on West Face	263	E
S. Col.	Cracks in S. Col. on West Face	264	E

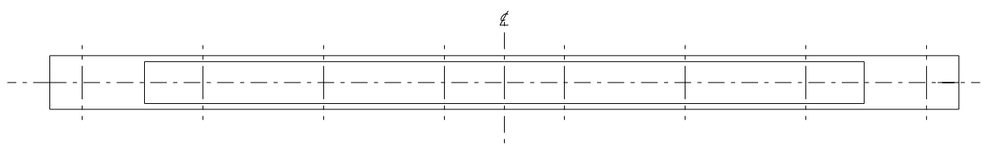

PLAN

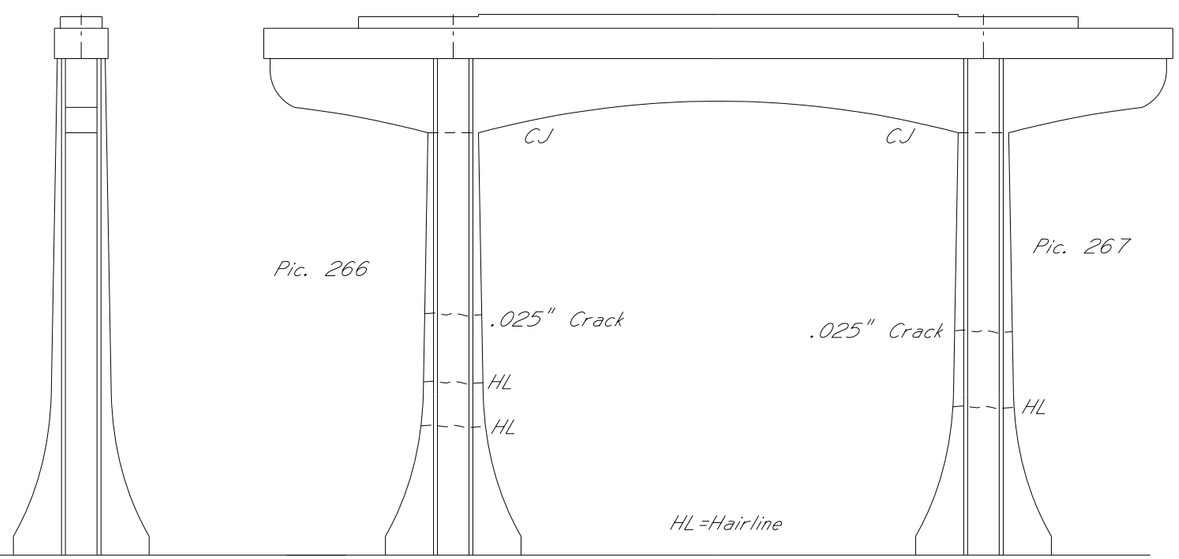

END ELEVATION

ELEVATION BENT 8

Looking East

Member	Comments	Photo No.	Looking
Bent 8	Overall Picture of Bent 8 Side View	265	N
N. Col.	Cracks in N. Col. on West Face	266	NE
S. Col.	Cracks in S. Col. on West Face	267	SE

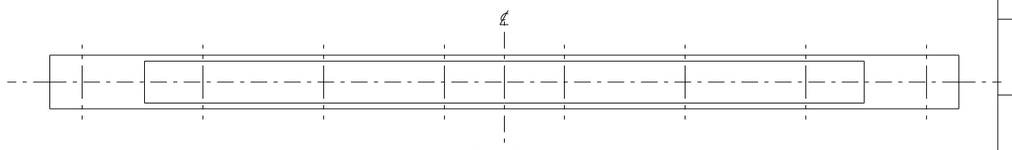

PLAN

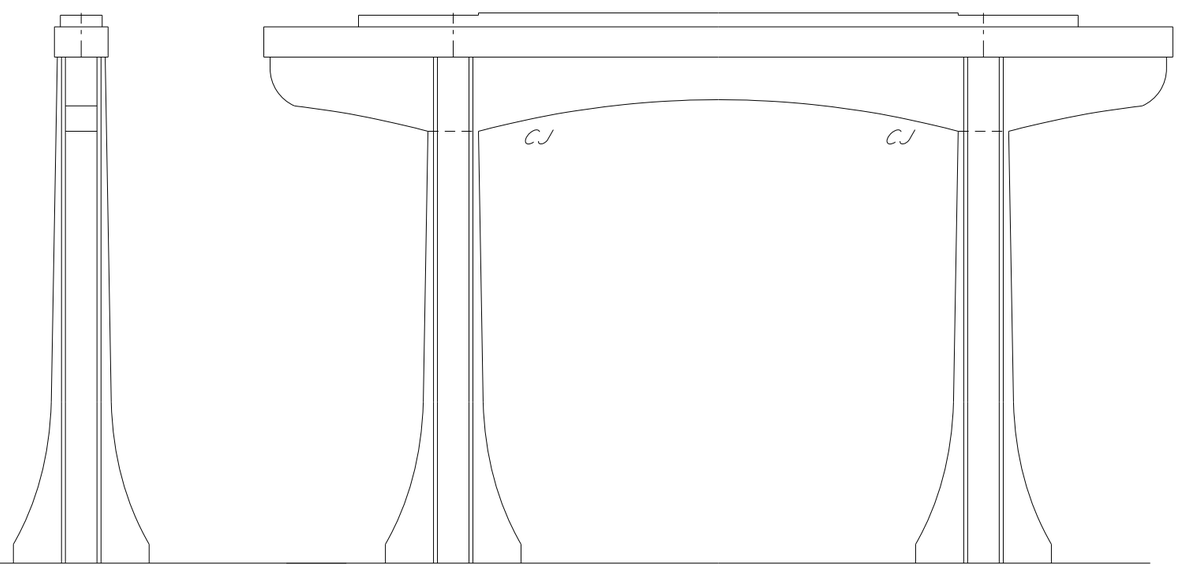

END ELEVATION

ELEVATION BENT 9

Looking East

Member	Comments	Photo No.	Looking
Bent 9	Overall Picture of Bent 9 - No Cracks	268	NE

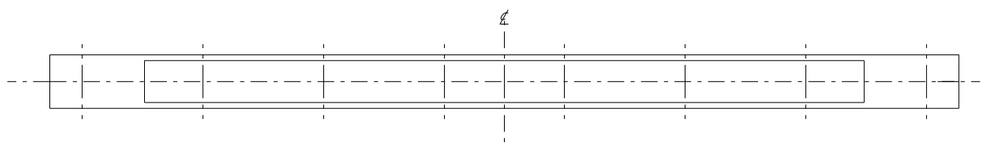

PLAN

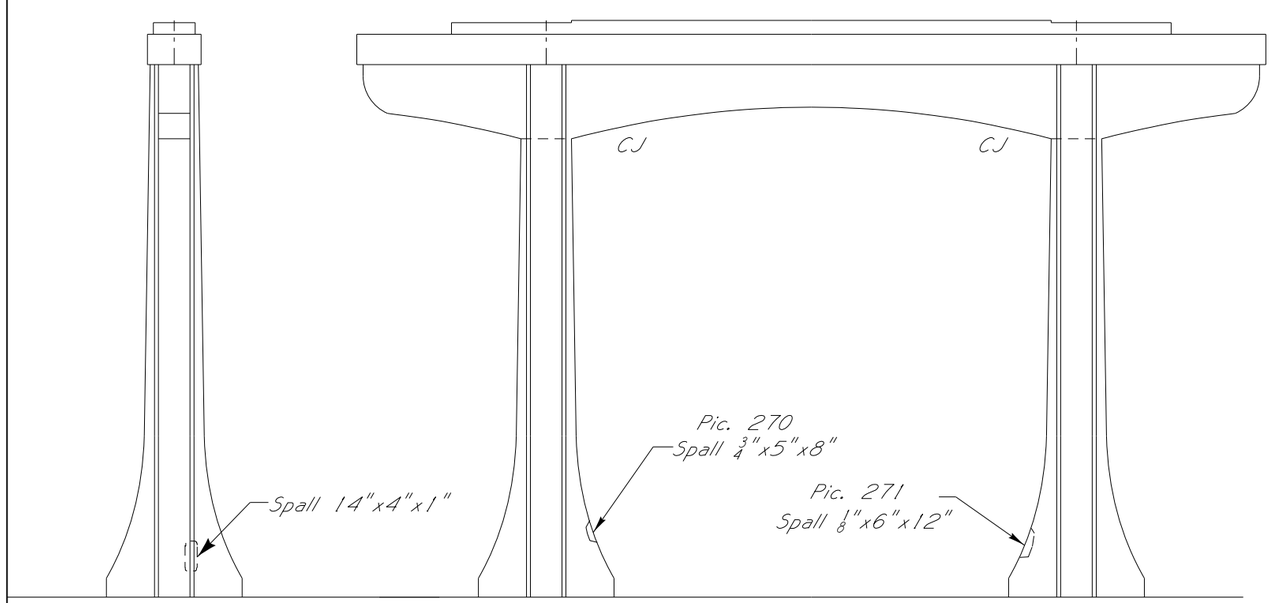

END ELEVATION

ELEVATION BENT 10

Looking East

Member	Comments	Photo No.	Looking
Bent 10	Overall Picture of Bent 10	269	E
N. Col.	Spall / Exposed Rebar South Face	270	N
S. Col.	Spall North Face	271	S

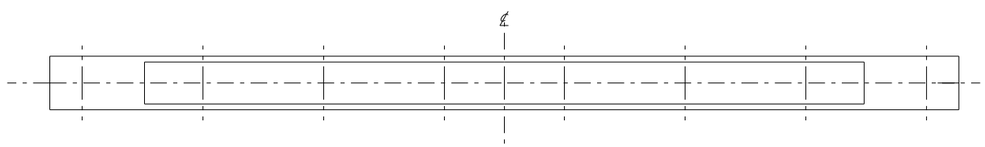

PLAN

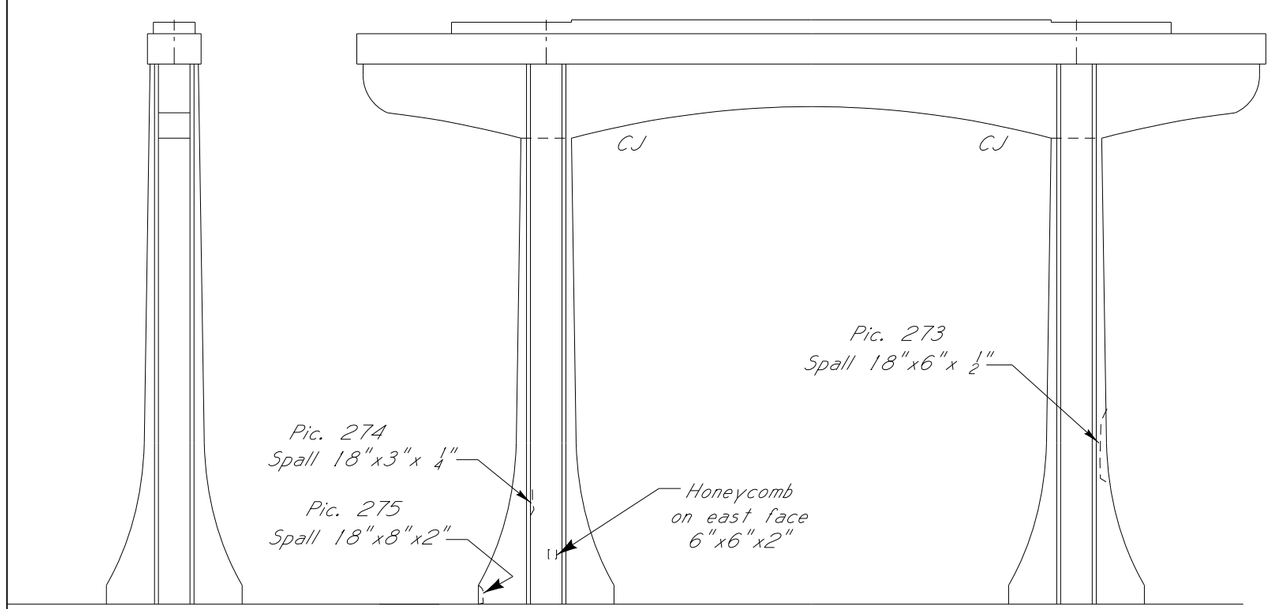

END ELEVATION

ELEVATION BENT 11

Looking East

Member	Comments	Photo No.	Looking
Bent 11	Overall Picture of Bent 11	272	E
S. Col.	Spall SW Face	273	NE
N. Col.	Spall NW Face	274	E
N. Col.	Spall East Face	275	SW

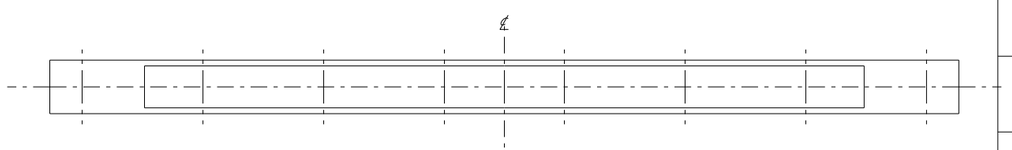

PLAN

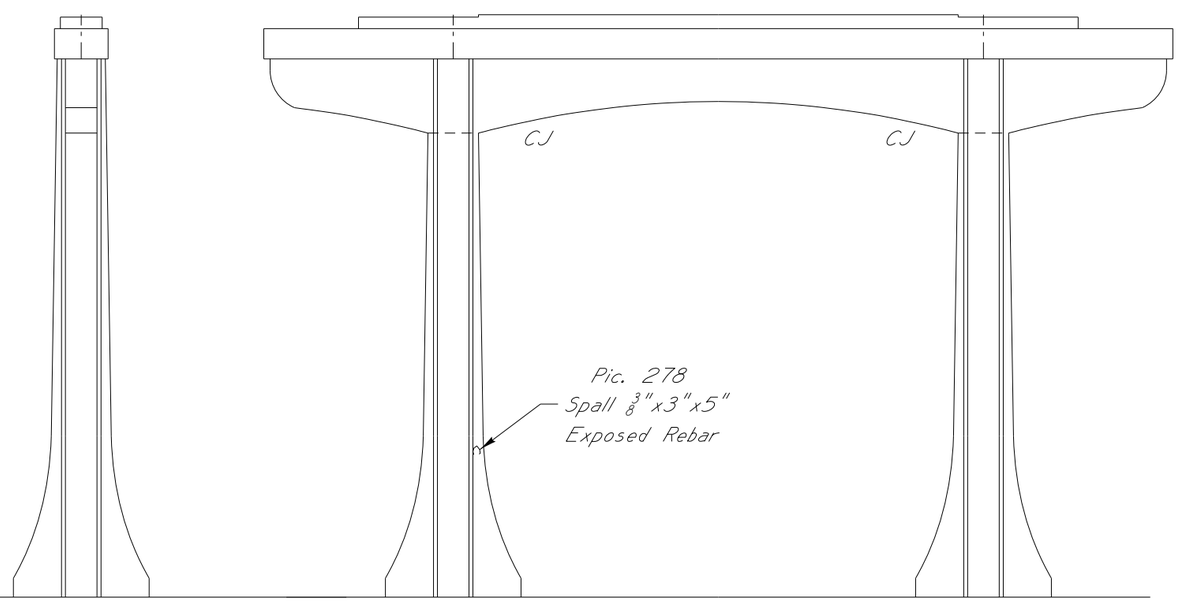

END ELEVATION

ELEVATION BENT 12

Looking East

Member	Comments	Photo No.	Looking
Bent 12	Overall Picture of Bent 12	276	E
N. Col.	Spall With Exposed Rebar East Face	278	W

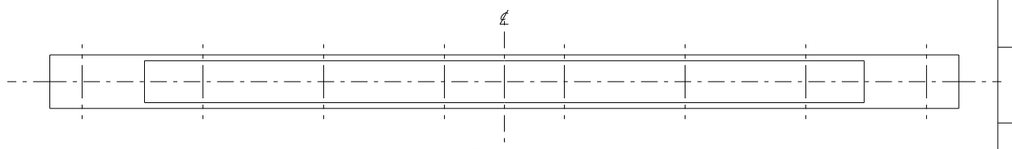

PLAN

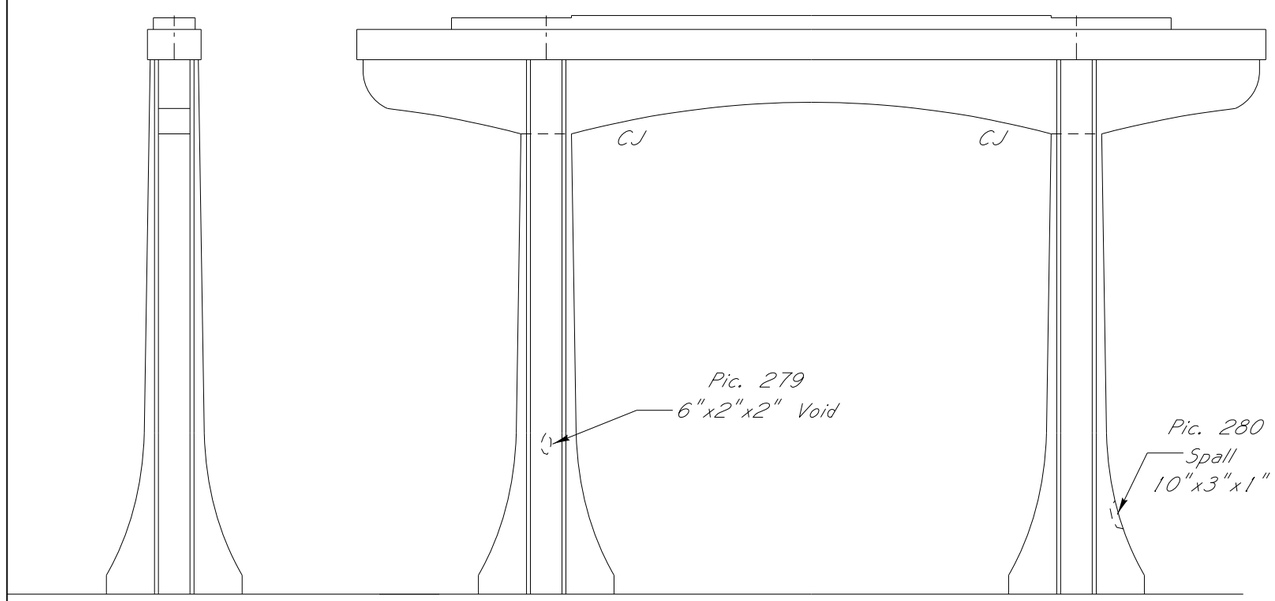

END ELEVATION

ELEVATION BENT 13

Looking East

Member	Comments	Photo No.	Looking
Bent 13	Overall Picture of Bent 13	277	E
N. Col.	Void In Column West Face	279	E
S. Col.	Spall SE Face	280	N

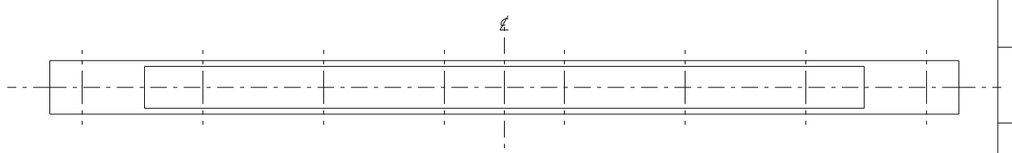

PLAN

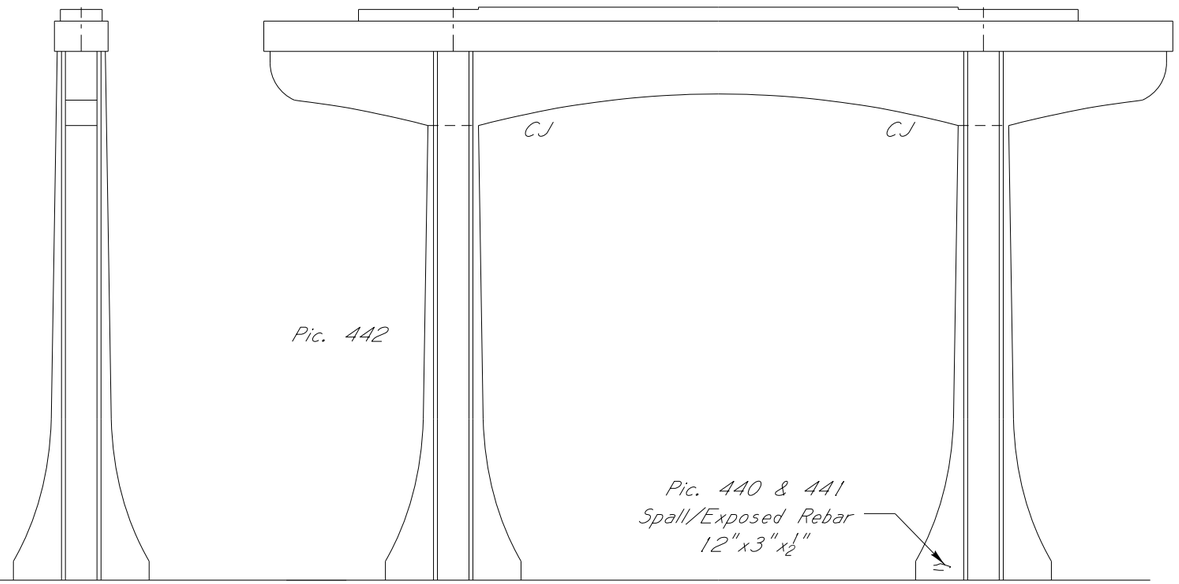

END ELEVATION

ELEVATION BENT 14

Looking East

Member	Comments	Photo No.	Looking
Bent 14	Overall Picture of Bent 14	439	W
N. Col.	North Column	442	W
S. Col.	Spall Exposed Rebar 12"x3"x ½" East Face	440 441	W W

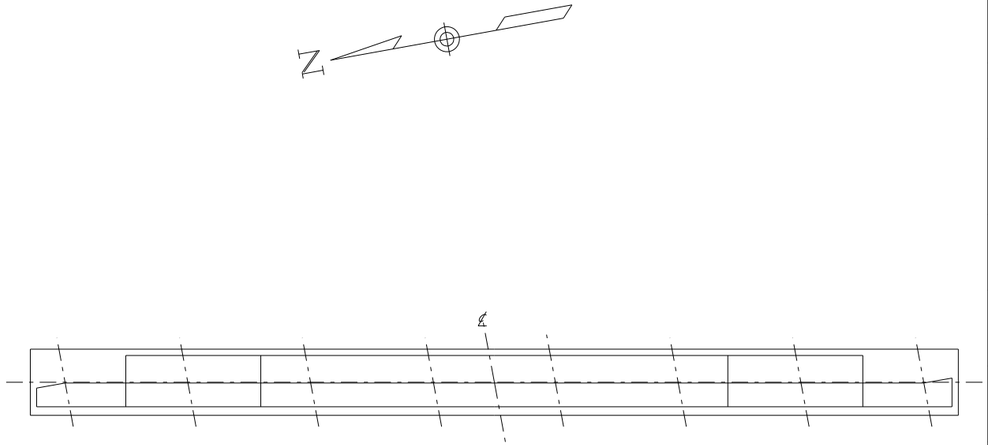

PLAN

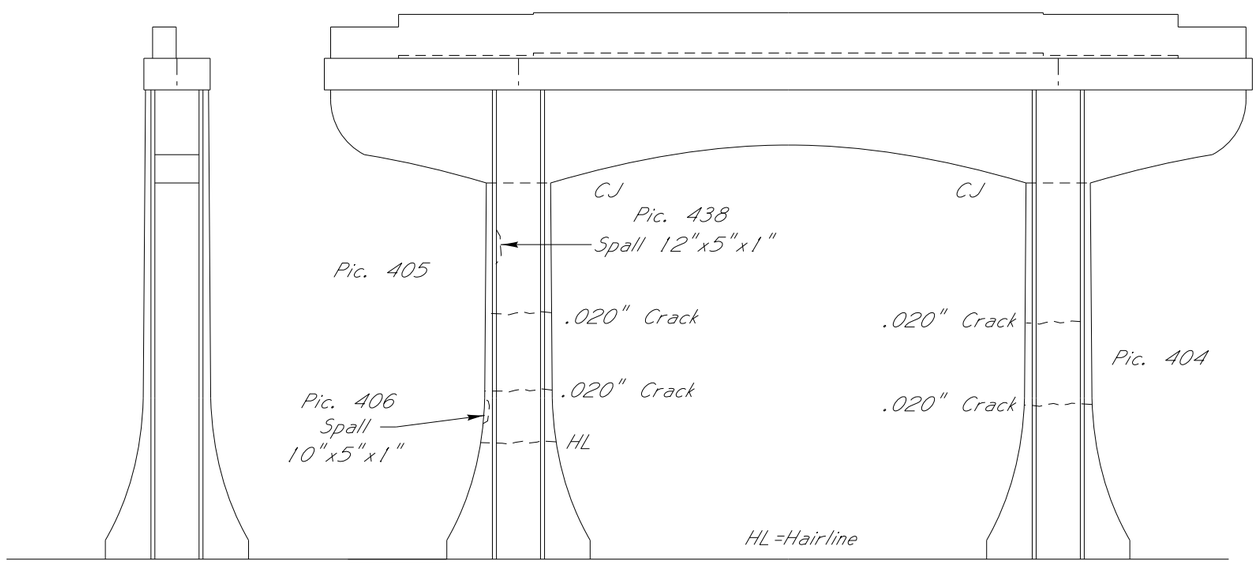

END ELEVATION

ELEVATION BENT 15

Looking East

Member	Comments	Photo No.	Looking
Bent 15	Overall Picture of Bent 15	403	W
S. Col.	South Column	404	W
N. Col.	North Column	405	W
N. Col.	Spall/ 10"x5"x1" NE Face	406	W
N. Col.	Spall/ 12"x5"x1" West Face	438	E

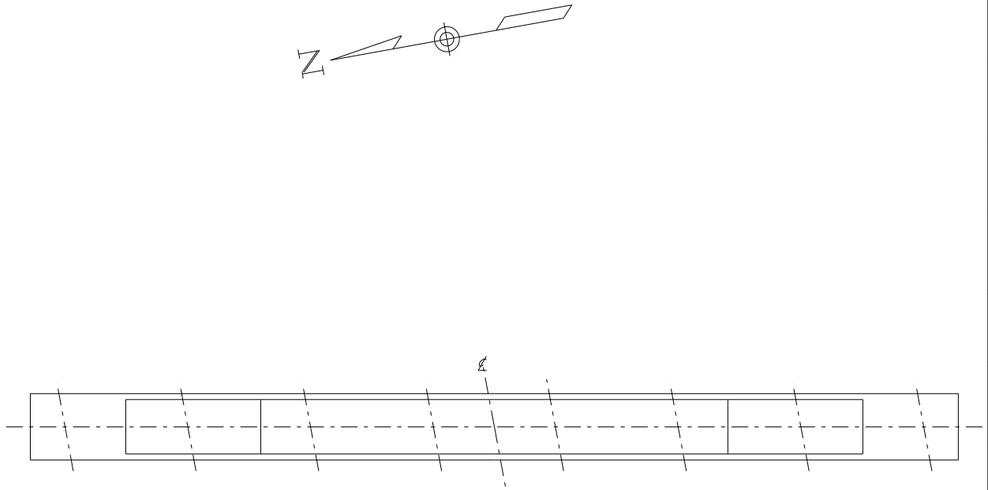

PLAN

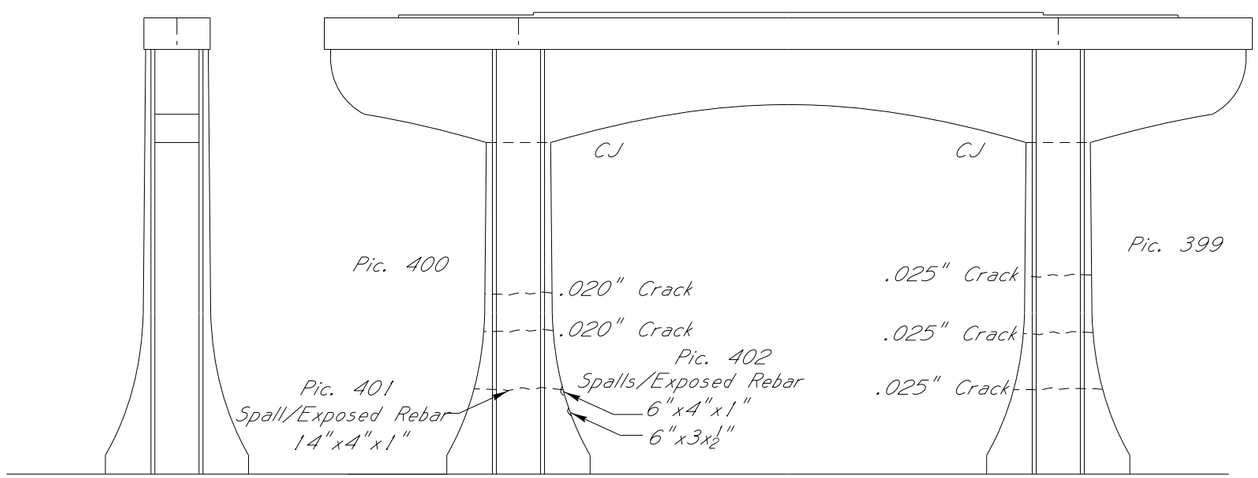

END ELEVATION

ELEVATION BENT 16

Looking East

Member	Comments	Photo No.	Looking
Bent 16	Overall Picture of Bent 16	398	W
S. Col.	0.025" Cracks	399	W
N. Col.	Spall/Cracks/Exposed Rebar East Face	400	W
N. Col.	Spall/Exposed Rebar 14"x4"x1" East Face	401	W
N. Col.	Spall/Exposed Rebar 6"x4"x1"/ 6"x3x½" South Face	402	N

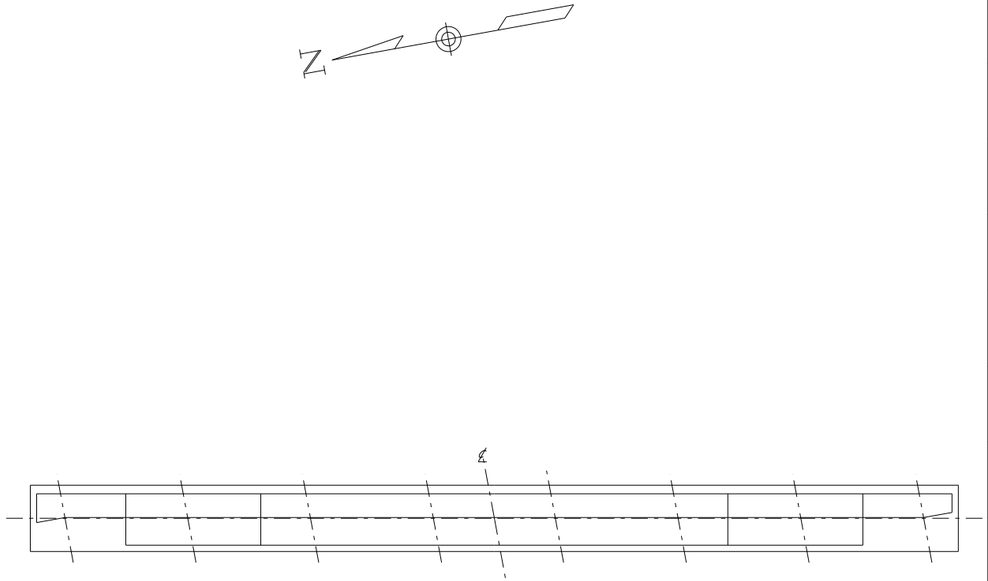

PLAN

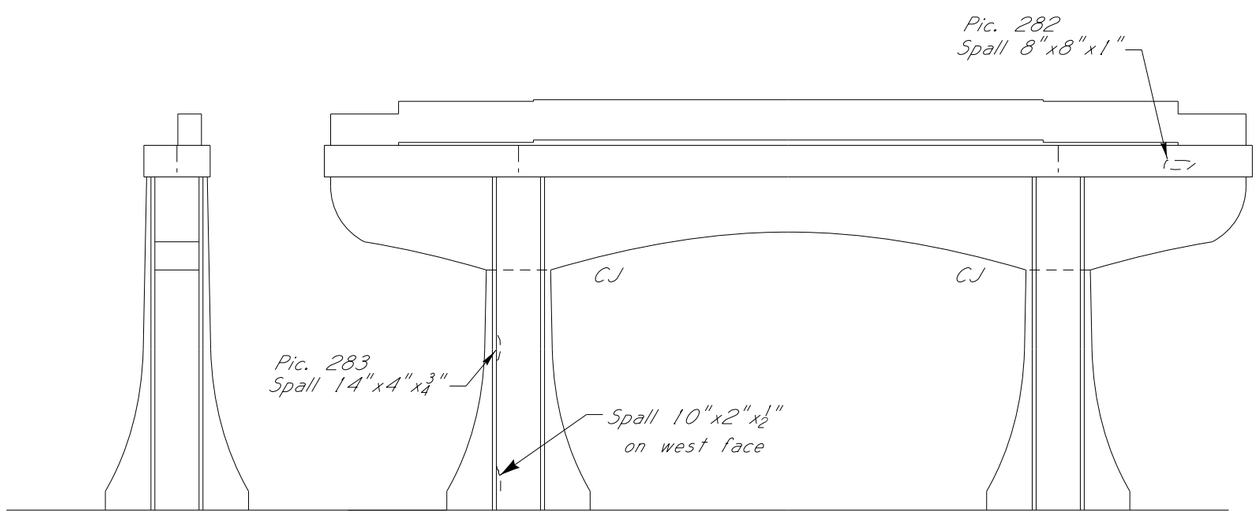

END ELEVATION

ELEVATION BENT 17

Looking East

Member	Comments	Photo No.	Looking
Bent 17	Overall Picture of Bent 17	281	W
Cap	Spall on East Face of Cap 8"x8"x1"	282	W
N. Col.	Spall NE Face/ 14"x4"x3/4"	283	W

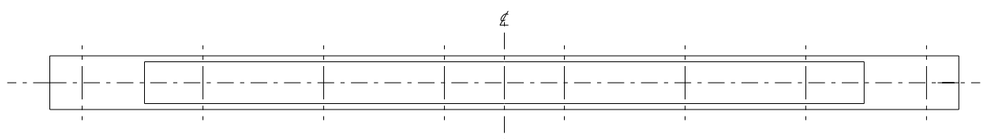

PLAN

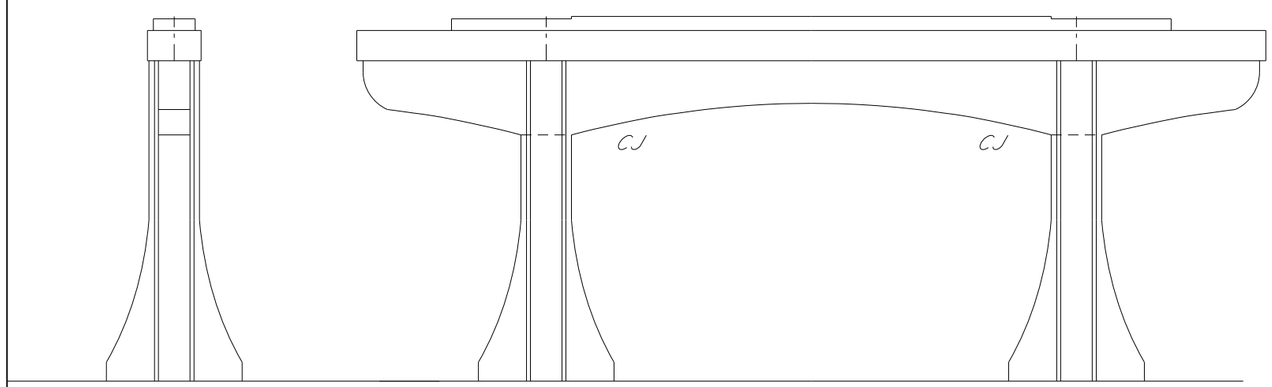

END ELEVATION

ELEVATION BENT 18

Looking East

Member	Comments	Photo No.	Looking
Bent 18	Overall Picture of Bent 18	284	W

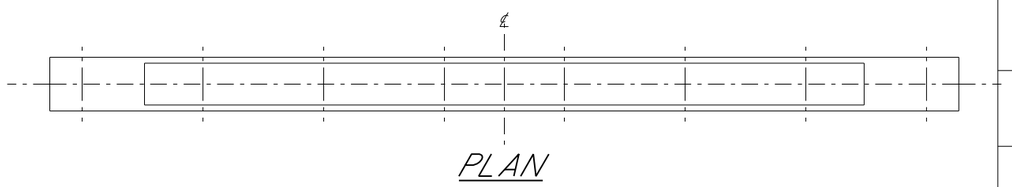

PLAN

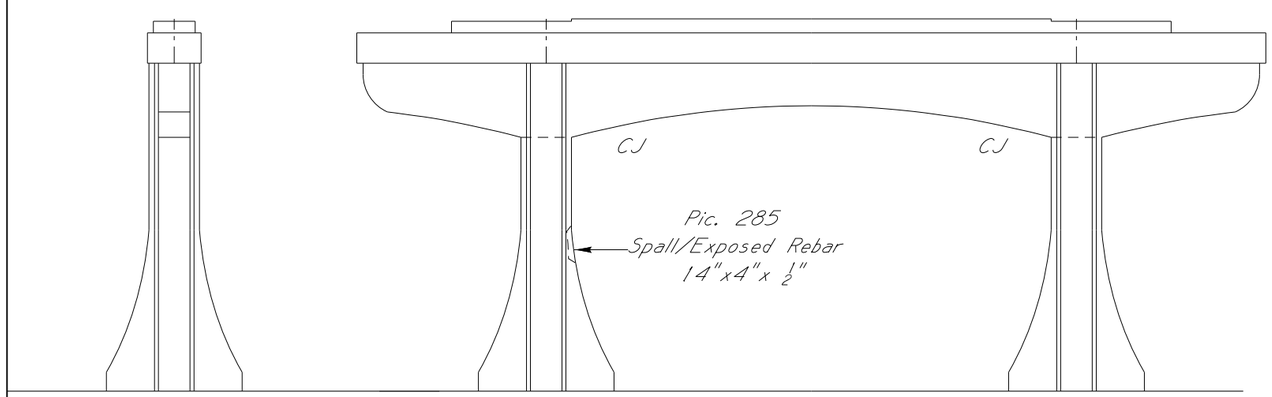

END ELEVATION

ELEVATION BENT 19

Looking East

Member	Comments	Photo No.	Looking
Bent 19	Overall Picture of Bent 19	286	W
N. Col.	Spall/Exposed Rebar South Face 14"x4"x ½"	285	N

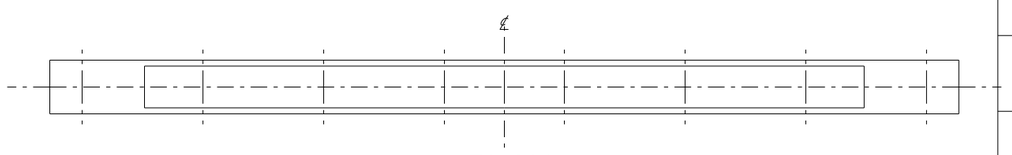

PLAN

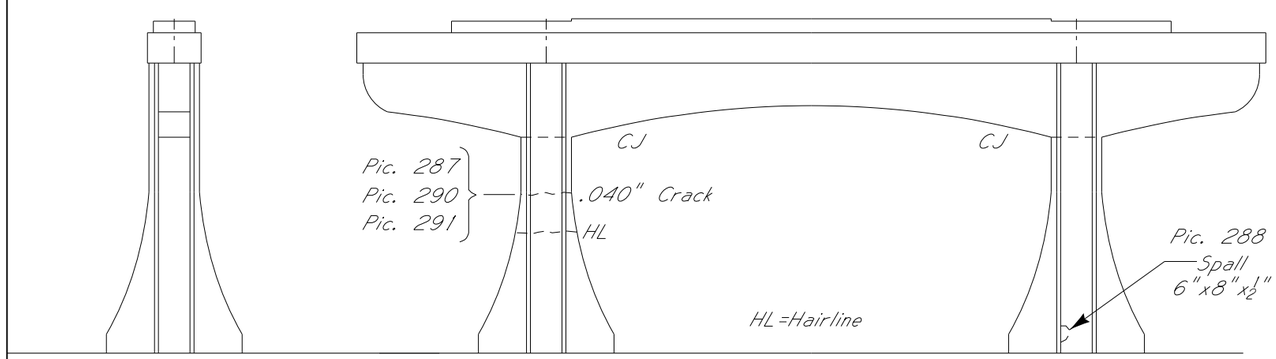

END ELEVATION

ELEVATION BENT 20

Looking East

Member	Comments	Photo No.	Looking
Bent 20	Overall Picture of Bent 20	289	W
N. Col.	Crack Around East, South & North Face	287 290 291	NW
S. Col.	Spall East Face/ 6"x8"x ½"	288	W

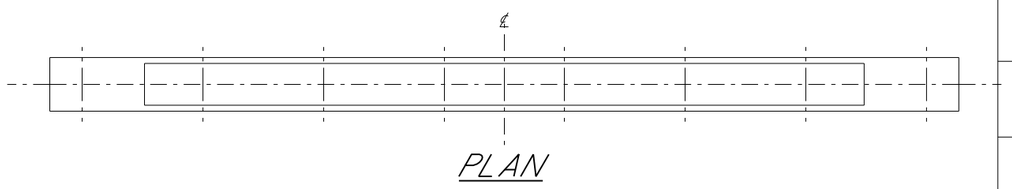

PLAN

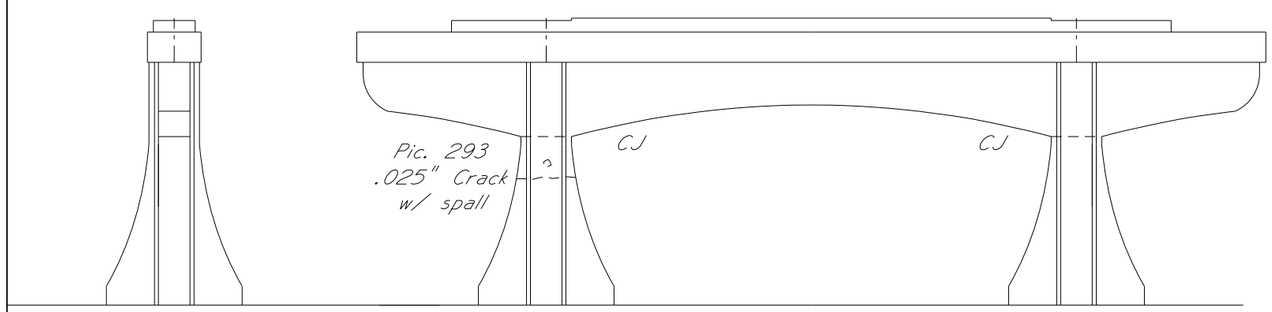

END ELEVATION

ELEVATION BENT 21

Looking East

Member	Comments	Photo No.	Looking
Bent 21	Overall Picture of Bent 21	292	E
N. Col.	East Face Spall/Crack	293	W